AUTHENTICATED
U.S. GOVERNMENT
INFORMATION
GPO

$$0.99 \times 100 = 99 \Rightarrow i+1 = 100 \Rightarrow P_{0.99,3} = X_{[100]} = 147 \mu g / m^3$$

c. 1. Using Equation 12, the 3-year average 99th percentile is calculated as follows:

$$\frac{128+50+147}{3} = 141.7\ \mu g / m^3 \text{ rounds to } 140 \mu g / m^3.$$

2. Therefore, this site meets the 24-hour PM_{10} standard.

[62 FR 38755, July 18, 1997]

PART 51—REQUIREMENTS FOR PREPARATION, ADOPTION, AND SUBMITTAL OF IMPLEMENTATION PLANS

Subparts A–E [Reserved]

Subpart F—Procedural Requirements

Sec.
51.100 Definitions.
51.101 Stipulations.
51.102 Public hearings.
51.103 Submission of plans, preliminary review of plans.
51.104 Revisions.
51.105 Approval of plans.

Subpart G—Control Strategy

51.110 Attainment and maintenance of national standards.
51.111 Description of control measures.
51.112 Demonstration of adequacy.
51.113 [Reserved]
51.114 Emissions data and projections.
51.115 Air quality data and projections.
51.116 Data availability.
51.117 Additional provisions for lead.
51.118 Stack height provisions.
51.119 Intermittent control systems.
51.120 Requirements for State Implementation Plan revisions relating to new motor vehicles.
51.121 Findings and requirements for submission of State implementation plan revisions relating to emissions of oxides of nitrogen.
51.122 Emissions reporting requirements for SIP revisions relating to budgets for NO_X emissions.

Subpart H—Prevention of Air Pollution Emergency Episodes

51.150 Classification of regions for episode plans.
51.151 Significant harm levels.
51.152 Contingency plans.
51.153 Reevaluation of episode plans.

Subpart I—Review of New Sources and Modifications

51.160 Legally enforceable procedures.
51.161 Public availability of information.
51.162 Identification of responsible agency.
51.163 Administrative procedures.
51.164 Stack height procedures.
51.165 Permit requirements.
51.166 Prevention of significant deterioration of air quality.

Subpart J—Ambient Air Quality Surveillance

51.190 Ambient air quality monitoring requirements.

Subpart K—Source Survelliance

51.210 General.
51.211 Emission reports and recordkeeping.
51.212 Testing, inspection, enforcement, and complaints.
51.213 Transportation control measures.
51.214 Continuous emission monitoring.

Subpart L—Legal Authority

51.230 Requirements for all plans.
51.231 Identification of legal authority.
51.232 Assignment of legal authority to local agencies.

Subpart M—Intergovernmental Consultation

AGENCY DESIGNATION

51.240 General plan requirements.
51.241 Nonattainment areas for carbon monoxide and ozone.
51.242 [Reserved]

Subpart N—Compliance Schedules

51.260 Legally enforceable compliance schedules.
51.261 Final compliance schedules.
51.262 Extension beyond one year.

Subpart O—Miscellaneous Plan Content Requirements

51.280 Resources.
51.281 Copies of rules and regulations.
51.285 Public notification.

Subpart P—Protection of Visibility

51.300 Purpose and applicability.
51.301 Definitions.
51.302 Implementation control strategies for reasonably attributable visibility impairment.
51.303 Exemptions from control.
51.304 Identification of integral vistas.
51.305 Monitoring for reasonably attributable visibility impairment.
51.306 Long-term strategy requirements for reasonably attributable visibility impairment.
51.307 New source review.
51.308 Regional haze program requirements.
51.309 Requirements related to the Grand Canyon Visibility Transport Commission.

Subpart Q—Reports

AIR QUALITY DATA REPORTING

51.320 Annual air quality data report.

SOURCE EMISSIONS AND STATE ACTION REPORTING

51.321 Annual source emissions and State action report.
51.322 Sources subject to emissions reporting.
51.323 Reportable emissions data and information.
51.324 Progress in plan enforcement.
51.326 Reportable revisions.
51.327 Enforcement orders and other State actions.
51.328 [Reserved]

Subpart R—Extensions

51.341 Request for 18-month extension.

Subpart S—Inspection/Maintenance Program Requirements

51.350 Applicability.
51.351 Enhanced I/M performance standard.
51.352 Basic I/M performance standard.
51.353 Network type and program evaluation.
51.354 Adequate tools and resources.
51.355 Test frequency and convenience.
51.356 Vehicle coverage.
51.357 Test procedures and standards.
51.358 Test equipment.
51.359 Quality control.
51.360 Waivers and compliance via diagnostic inspection.
51.361 Motorist compliance enforcement.
51.362 Motorist compliance enforcement program oversight.
51.363 Quality assurance.
51.364 Enforcement against contractors, stations and inspectors.
51.365 Data collection.
51.366 Data analysis and reporting.
51.367 Inspector training and licensing or certification.
51.368 Public information and consumer protection.
51.369 Improving repair effectiveness.
51.370 Compliance with recall notices.
51.371 On-road testing.
51.372 State Implementation Plan submissions.
51.373 Implementation deadlines.
APPENDIX A TO SUBPART S—CALIBRATIONS, ADJUSTMENTS AND QUALITY CONTROL
APPENDIX B TO SUBPART S—TEST PROCEDURES
APPENDIX C TO SUBPART S—STEADY-STATE SHORT TEST STANDARDS
APPENDIX D TO SUBPART S—STEADY-STATE SHORT TEST EQUIPMENT
APPENDIX E TO SUBPART S—TRANSIENT TEST DRIVING CYCLE

Subpart T—Conformity to State or Federal Implementation Plans of Transportation Plans, Programs, and Projects Developed, Funded or Approved Under Title 23 U.S.C. or the Federal Transit Laws

51.390 Implementation plan revision.

Subpart U—Economic Incentive Programs

51.490 Applicability.
51.491 Definitions.
51.492 State program election and submittal.
51.493 State program requirements.
51.494 Use of program revenues.

Subpart W—Determining Conformity of General Federal Actions to State or Federal Implementation Plans

51.850 Prohibition.
51.851 State Implementation Plan (SIP) revision.
51.852 Definitions.
51.853 Applicability.
51.854 Conformity analysis.
51.855 Reporting requirements.
51.856 Public participation.
51.857 Frequency of conformity determinations.

51.858 Criteria for determining conformity of general Federal actions.
51.859 Procedures for conformity determinations of general Federal actions.
51.860 Mitigation of air quality impacts.
APPENDIXES A–K [RESERVED]
APPENDIX L TO PART 51—EXAMPLE REGULATIONS FOR PREVENTION OF AIR POLLUTION EMERGENCY EPISODES
APPENDIX M TO PART 51—RECOMMENDED TEST METHODS FOR STATE IMPLEMENTATION PLANS
APPENDIXES N–O [RESERVED]
APPENDIX P TO PART 51—MINIMUM EMISSION MONITORING REQUIREMENTS
APPENDIXES Q–R [RESERVED]
APPENDIX S TO PART 51—EMISSION OFFSET INTERPRETATIVE RULING
APPENDIXES T–U [RESERVED]
APPENDIX V TO PART 51—CRITERIA FOR DETERMINING THE COMPLETENESS OF PLAN SUBMISSIONS
APPENDIX W TO PART 51—GUIDELINE ON AIR QUALITY MODELS
APPENDIX X TO PART 51—EXAMPLES OF ECONOMIC INCENTIVE PROGRAMS

AUTHORITY: 42 U.S.C. 7410, 7414, 7421, 7470–7479, 7491, 7492, 7601, and 7602.

SOURCE: 36 FR 22398, Nov. 25, 1971, unless otherwise noted.

Subparts A–E [Reserved]

Subpart F—Procedural Requirements

AUTHORITY: 42 U.S.C. 7401, 7411, 7412, 7413, 7414, 7470–7479, 7501–7508, 7601, and 7602.

§51.100 Definitions.

As used in this part, all terms not defined herein will have the meaning given them in the Act:

(a) *Act* means the Clean Air Act (42 U.S.C. 7401 *et seq.*, as amended by Pub. L. 91–604, 84 Stat. 1676 Pub. L. 95–95, 91 Stat., 685 and Pub. L. 95–190, 91 Stat., 1399.)

(b) *Administrator* means the Administrator of the Environmental Protection Agency (EPA) or an authorized representative.

(c) *Primary standard* means a national primary ambient air quality standard promulgated pursuant to section 109 of the Act.

(d) *Secondary standard* means a national secondary ambient air quality standard promulgated pursuant to section 109 of the Act.

(e) *National standard* means either a primary or secondary standard.

(f) *Owner or operator* means any person who owns, leases, operates, controls, or supervises a facility, building, structure, or installation which directly or indirectly result or may result in emissions of any air pollutant for which a national standard is in effect.

(g) *Local agency* means any local government agency other than the State agency, which is charged with responsibility for carrying out a portion of the plan.

(h) *Regional Office* means one of the ten (10) EPA Regional Offices.

(i) *State agency* means the air pollution control agency primarily responsible for development and implementation of a plan under the Act.

(j) *Plan* means an implementation plan approved or promulgated under section 110 of 172 of the Act.

(k) *Point source* means the following:

(1) For particulate matter, sulfur oxides, carbon monoxide, volatile organic compounds (VOC) and nitrogen dioxide—

(i) Any stationary source the actual emissions of which are in excess of 90.7 metric tons (100 tons) per year of the pollutant in a region containing an area whose 1980 *urban place* population, as defined by the U.S. Bureau of the Census, was equal to or greater than 1 million.

(ii) Any stationary source the actual emissions of which are in excess of 22.7 metric tons (25 tons) per year of the pollutant in a region containing an area whose 1980 *urban place* population, as defined by the U.S. Bureau of the Census, was less than 1 million; or

(2) For lead or lead compounds measured as elemental lead, any stationary source that actually emits a total of 4.5 metric tons (5 tons) per year or more.

(l) *Area source* means any small residential, governmental, institutional, commercial, or industrial fuel combustion operations; onsite solid waste disposal facility; motor vehicles, aircraft vessels, or other transportation facilities or other miscellaneous sources identified through inventory techniques similar to those described in the ''AEROS Manual series, Vol. II AEROS

User's Manual,'' EPA–450/2–76–029 December 1976.

(m) *Region* means an area designated as an air quality control region (AQCR) under section 107(c) of the Act.

(n) *Control strategy* means a combination of measures designated to achieve the aggregate reduction of emissions necessary for attainment and maintenance of national standards including, but not limited to, measures such as:

(1) Emission limitations.

(2) Federal or State emission charges or taxes or other economic incentives or disincentives.

(3) Closing or relocation of residential, commercial, or industrial facilities.

(4) Changes in schedules or methods of operation of commercial or industrial facilities or transportation systems, including, but not limited to, short-term changes made in accordance with standby plans.

(5) Periodic inspection and testing of motor vehicle emission control systems, at such time as the Administrator determines that such programs are feasible and practicable.

(6) Emission control measures applicable to in-use motor vehicles, including, but not limited to, measures such as mandatory maintenance, installation of emission control devices, and conversion to gaseous fuels.

(7) Any transportation control measure including those transportation measures listed in section 108(f) of the Clean Air Act as amended.

(8) Any variation of, or alternative to any measure delineated herein.

(9) Control or prohibition of a fuel or fuel additive used in motor vehicles, if such control or prohibition is necessary to achieve a national primary or secondary air quality standard and is approved by the Administrator under section 211(c)(4)(C) of the Act.

(o) *Reasonably available control technology (RACT)* means devices, systems, process modifications, or other apparatus or techniques that are reasonably available taking into account:

(1) The necessity of imposing such controls in order to attain and maintain a national ambient air quality standard;

(2) The social, environmental, and economic impact of such controls; and

(3) Alternative means of providing for attainment and maintenance of such standard. (This provision defines RACT for the purposes of § 51.341(b) only.)

(p) *Compliance schedule* means the date or dates by which a source or category of sources is required to comply with specific emission limitations contained in an implementation plan and with any increments of progress toward such compliance.

(q) *Increments of progress* means steps toward compliance which will be taken by a specific source, including:

(1) Date of submittal of the source's final control plan to the appropriate air pollution control agency;

(2) Date by which contracts for emission control systems or process modifications will be awarded; or date by which orders will be issued for the purchase of component parts to accomplish emission control or process modification;

(3) Date of initiation of on-site construction or installation of emission control equipment or process change;

(4) Date by which on-site construction or installation of emission control equipment or process modification is to be completed; and

(5) Date by which final compliance is to be achieved.

(r) *Transportation control measure* means any measure that is directed toward reducing emissions of air pollutants from transportation sources. Such measures include, but are not limited to, those listed in section 108(f) of the Clean Air Act.

(s) *Volatile organic compounds (VOC)* means any compound of carbon, excluding carbon monoxide, carbon dioxide, carbonic acid, metallic carbides or carbonates, and ammonium carbonate, which participates in atmospheric photochemical reactions.

(1) This includes any such organic compound other than the following, which have been determined to have negligible photochemical reactivity: methane; ethane; methylene chloride (dichloromethane); 1,1,1-trichloroethane (methyl chloroform); 1,1,2-trichloro-1,2,2-trifluoroethane (CFC–113); trichlorofluoromethane (CFC–11); dichlorodifluoromethane (CFC–12); chlorodifluoromethane (HCFC–22); trifluoromethane (HFC–23); 1,2-dichloro

1,1,2,2-tetrafluoroethane (CFC–114); chloropentafluoroethane (CFC–115); 1,1,1-trifluoro 2,2-dichloroethane (HCFC–123); 1,1,1,2-tetrafluoroethane (HFC–134a); 1,1-dichloro 1-fluoroethane (HCFC–141b); 1-chloro 1,1-difluoroethane (HCFC–142b); 2-chloro-1,1,1,2-tetrafluoroethane (HCFC–124); pentafluoroethane (HFC–125); 1,1,2,2-tetrafluoroethane (HFC–134); 1,1,1-trifluoroethane (HFC–143a); 1,1-difluoroethane (HFC–152a); parachlorobenzotrifluoride (PCBTF); cyclic, branched, or linear completely methylated siloxanes; acetone; perchloroethylene (tetrachloroethylene); 3,3-dichloro-1,1,1,2,2-pentafluoropropane (HCFC–225ca); 1,3-dichloro-1,1,2,2,3-pentafluoropropane (HCFC–225cb); 1,1,1,2,3,4,4,5,5,5-decafluoropentane (HFC 43–10mee); difluoromethane (HFC–32); ethylfluoride (HFC–161); 1,1,1,3,3,3-hexafluoropropane (HFC–236fa); 1,1,2,2,3-pentafluoropropane (HFC–245ca); 1,1,2,3,3-pentafluoropropane (HFC–245ea); 1,1,1,2,3-pentafluoropropane (HFC–245eb); 1,1,1,3,3-pentafluoropropane (HFC–245fa); 1,1,1,2,3,3-hexafluoropropane (HFC–236ea); 1,1,1,3,3-pentafluorobutane (HFC–365mfc); chlorofluoromethane (HCFC–31); 1 chloro-1-fluoroethane (HCFC–151a); 1,2-dichloro-1,1,2-trifluoroethane (HCFC–123a); 1,1,1,2,2,3,3,4,4-nonafluoro-4-methoxy-butane ($C_4F_9OCH_3$); 2-(difluoromethoxymethyl)-1,1,1,2,3,3,3-heptafluoropropane ($(CF_3)_2CFCF_2OCH_3$); 1-ethoxy-1,1,2,2,3,3,4,4,4-nonafluorobutane ($C_4F_9OC_2H_5$); 2-(ethoxydifluoromethyl)-1,1,1,2,3,3,3-heptafluoropropane ($(CF_3)_2CFCF_2OC_2H_5$); methyl acetate and perfluorocarbon compounds which fall into these classes:

(i) Cyclic, branched, or linear, completely fluorinated alkanes;

(ii) Cyclic, branched, or linear, completely fluorinated ethers with no unsaturations;

(iii) Cyclic, branched, or linear, completely fluorinated tertiary amines with no unsaturations; and

(iv) Sulfur containing perfluorocarbons with no unsaturations and with sulfur bonds only to carbon and fluorine.

(2) For purposes of determining compliance with emissions limits, VOC will be measured by the test methods in the approved State implementation plan (SIP) or 40 CFR part 60, appendix A, as applicable. Where such a method also measures compounds with negligible photochemical reactivity, these negligibility-reactive compounds may be excluded as VOC if the amount of such compounds is accurately quantified, and such exclusion is approved by the enforcement authority.

(3) As a precondition to excluding these compounds as VOC or at any time thereafter, the enforcement authority may require an owner or operator to provide monitoring or testing methods and results demonstrating, to the satisfaction of the enforcement authority, the amount of negligibly-reactive compounds in the source's emissions.

(4) For purposes of Federal enforcement for a specific source, the EPA shall use the test methods specified in the applicable EPA-approved SIP, in a permit issued pursuant to a program approved or promulgated under title V of the Act, or under 40 CFR part 51, subpart I or appendix S, or under 40 CFR parts 52 or 60. The EPA shall not be bound by any State determination as to appropriate methods for testing or monitoring negligibly-reactive compounds if such determination is not reflected in any of the above provisions.

(t)–(w) [Reserved]

(x) *Time period* means any period of time designated by hour, month, season, calendar year, averaging time, or other suitable characteristics, for which ambient air quality is estimated.

(y) *Variance* means the temporary deferral of a final compliance date for an individual source subject to an approved regulation, or a temporary change to an approved regulation as it applies to an individual source.

(z) *Emission limitation* and *emission standard* mean a requirement established by a State, local government, or the Administrator which limits the quantity, rate, or concentration of emissions of air pollutants on a continuous basis, including any requirements

which limit the level of opacity, prescribe equipment, set fuel specifications, or prescribe operation or maintenance procedures for a source to assure continuous emission reduction.

(aa) *Capacity factor* means the ratio of the average load on a machine or equipment for the period of time considered to the capacity rating of the machine or equipment.

(bb) *Excess emissions* means emissions of an air pollutant in excess of an emission standard.

(cc) *Nitric acid plant* means any facility producing nitric acid 30 to 70 percent in strength by either the pressure or atmospheric pressure process.

(dd) *Sulfuric acid plant* means any facility producing sulfuric acid by the contact process by burning elemental sulfur, alkylation acid, hydrogen sulfide, or acid sludge, but does not include facilities where conversion to sulfuric acid is utilized primarily as a means of preventing emissions to the atmosphere of sulfur dioxide or other sulfur compounds.

(ee) *Fossil fuel-fired steam generator* means a furnance or bioler used in the process of burning fossil fuel for the primary purpose of producing steam by heat transfer.

(ff) *Stack* means any point in a source designed to emit solids, liquids, or gases into the air, including a pipe or duct but not including flares.

(gg) *A stack in existence* means that the owner or operator had (1) begun, or caused to begin, a continuous program of physical on-site construction of the stack or (2) entered into binding agreements or contractual obligations, which could not be cancelled or modified without substantial loss to the owner or operator, to undertake a program of construction of the stack to be completed within a reasonable time.

(hh)(1) *Dispersion technique* means any technique which attempts to affect the concentration of a pollutant in the ambient air by:

(i) Using that portion of a stack which exceeds good engineering practice stack height:

(ii) Varying the rate of emission of a pollutant according to atmospheric conditions or ambient concentrations of that pollutant; or

(iii) Increasing final exhaust gas plume rise by manipulating source process parameters, exhaust gas parameters, stack parameters, or combining exhaust gases from several existing stacks into one stack; or other selective handling of exhaust gas streams so as to increase the exhaust gas plume rise.

(2) The preceding sentence does not include:

(i) The reheating of a gas stream, following use of a pollution control system, for the purpose of returning the gas to the temperature at which it was originally discharged from the facility generating the gas stream;

(ii) The merging of exhaust gas streams where:

(A) The source owner or operator demonstrates that the facility was originally designed and constructed with such merged gas streams;

(B) After July 8, 1985 such merging is part of a change in operation at the facility that includes the installation of pollution controls and is accompanied by a net reduction in the allowable emissions of a pollutant. This exclusion from the definition of *dispersion techniques* shall apply only to the emission limitation for the pollutant affected by such change in operation; or

(C) Before July 8, 1985, such merging was part of a change in operation at the facility that included the installation of emissions control equipment or was carried out for sound economic or engineering reasons. Where there was an increase in the emission limitation or, in the event that no emission limitation was in existence prior to the merging, an increase in the quantity of pollutants actually emitted prior to the merging, the reviewing agency shall presume that merging was significantly motivated by an intent to gain emissions credit for greater dispersion. Absent a demonstration by the source owner or operator that merging was not significantly motivated by such intent, the reviewing agency shall deny credit for the effects of such merging in calculating the allowable emissions for the source;

(iii) Smoke management in agricultural or silvicultural prescribed burning programs;

(iv) Episodic restrictions on residential woodburning and open burning; or

(v) Techniques under §51.100(hh)(1)(iii) which increase final exhaust gas plume rise where the resulting allowable emissions of sulfur dioxide from the facility do not exceed 5,000 tons per year.

(ii) *Good engineering practice* (GEP) stack height means the greater of:

(1) 65 meters, measured from the ground-level elevation at the base of the stack:

(2)(i) For stacks in existence on January 12, 1979, and for which the owner or operator had obtained all applicable permits or approvals required under 40 CFR parts 51 and 52.

$H_g=2.5H$,

provided the owner or operator produces evidence that this equation was actually relied on in establishing an emission limitation:

(ii) For all other stacks,

$H_g=H + 1.5L$

where:

H_g = good engineering practice stack height, measured from the ground-level elevation at the base of the stack,

H = height of nearby structure(s) measured from the ground-level elevation at the base of the stack.

L = lesser dimension, height or projected width, of nearby structure(s)

provided that the EPA, State or local control agency may require the use of a field study or fluid model to verify GEP stack height for the source; or

(3) The height demonstrated by a fluid model or a field study approved by the EPA State or local control agency, which ensures that the emissions from a stack do not result in excessive concentrations of any air pollutant as a result of atmospheric downwash, wakes, or eddy effects created by the source itself, nearby structures or nearby terrain features.

(jj) *Nearby* as used in §51.100(ii) of this part is defined for a specific structure or terrain feature and

(1) For purposes of applying the formulae provided in §51.100(ii)(2) means that distance up to five times the lesser of the height or the width dimension of a structure, but not greater than 0.8 km (½ mile), and

(2) For conducting demonstrations under §51.100(ii)(3) means not greater than 0.8 km (½ mile), except that the portion of a terrain feature may be considered to be nearby which falls within a distance of up to 10 times the maximum height (H_t) of the feature, not to exceed 2 miles if such feature achieves a height (H_t) 0.8 km from the stack that is at least 40 percent of the GEP stack height determined by the formulae provided in §51.100(ii)(2)(ii) of this part or 26 meters, whichever is greater, as measured from the ground-level elevation at the base of the stack. The height of the structure or terrain feature is measured from the ground-level elevation at the base of the stack.

(kk) *Excessive concentration* is defined for the purpose of determining good engineering practice stack height under §51.100(ii)(3) and means:

(1) For sources seeking credit for stack height exceeding that established under §51.100(ii)(2) a maximum ground-level concentration due to emissions from a stack due in whole or part to downwash, wakes, and eddy effects produced by nearby structures or nearby terrain features which individually is at least 40 percent in excess of the maximum concentration experienced in the absence of such downwash, wakes, or eddy effects and which contributes to a total concentration due to emissions from all sources that is greater than an ambient air quality standard. For sources subject to the prevention of significant deterioration program (40 CFR 51.166 and 52.21), an excessive concentration alternatively means a maximum ground-level concentration due to emissions from a stack due in whole or part to downwash, wakes, or eddy effects produced by nearby structures or nearby terrain features which individually is at least 40 percent in excess of the maximum concentration experienced in the absence of such downwash, wakes, or eddy effects and greater than a prevention of significant deterioration increment. The allowable emission rate to be used in making demonstrations under this part shall be prescribed by the new source performance standard that is applicable to the source category unless the owner or operator demonstrates that this emission

rate is infeasible. Where such demonstrations are approved by the authority administering the State implementation plan, an alternative emission rate shall be established in consultation with the source owner or operator.

(2) For sources seeking credit after October 11, 1983, for increases in existing stack heights up to the heights established under § 51.100(ii)(2), either (i) a maximum ground-level concentration due in whole or part to downwash, wakes or eddy effects as provided in paragraph (kk)(1) of this section, except that the emission rate specified by any applicable State implementation plan (or, in the absence of such a limit, the actual emission rate) shall be used, or (ii) the actual presence of a local nuisance caused by the existing stack, as determined by the authority administering the State implementation plan; and

(3) For sources seeking credit after January 12, 1979 for a stack height determined under § 51.100(ii)(2) where the authority administering the State implementation plan requires the use of a field study or fluid model to verify GEP stack height, for sources seeking stack height credit after November 9, 1984 based on the aerodynamic influence of cooling towers, and for sources seeking stack height credit after December 31, 1970 based on the aerodynamic influence of structures not adequately represented by the equations in § 51.100(ii)(2), a maximum ground-level concentration due in whole or part to downwash, wakes or eddy effects that is at least 40 percent in excess of the maximum concentration experienced in the absence of such downwash, wakes, or eddy effects.

(ll)–(mm) [Reserved]

(nn) Intermittent control system (ICS) means a dispersion technique which varies the rate at which pollutants are emitted to the atmosphere according to meteorological conditions and/or ambient concentrations of the pollutant, in order to prevent ground-level concentrations in excess of applicable ambient air quality standards. Such a dispersion technique is an ICS whether used alone, used with other dispersion techniques, or used as a supplement to continuous emission controls (i.e., used as a supplemental control system).

(oo) *Particulate matter* means any airborne finely divided solid or liquid material with an aerodynamic diameter smaller than 100 micrometers.

(pp) *Particulate matter emissions* means all finely divided solid or liquid material, other than uncombined water, emitted to the ambient air as measured by applicable reference methods, or an equivalent or alternative method, specified in this chapter, or by a test method specified in an approved State implementation plan.

(qq) PM_{10} means particulate matter with an aerodynamic diameter less than or equal to a nominal 10 micrometers as measured by a reference method based on appendix J of part 50 of this chapter and designated in accordance with part 53 of this chapter or by an equivalent method designated in accordance with part 53 of this chapter.

(rr) PM_{10} emissions means finely divided solid or liquid material, with an aerodynamic diameter less than or equal to a nominal 10 micrometers emitted to the ambient air as measured by an applicable reference method, or an equivalent or alternative method, specified in this chapter or by a test method specified in an approved State implementation plan.

(ss) *Total suspended particulate* means particulate matter as measured by the method described in appendix B of part 50 of this chapter.

[51 FR 40661, Nov. 7, 1986, as amended at 52 FR 24712, July 1, 1987; 57 FR 3945, Feb. 3, 1992; 61 FR 4590, Feb. 7, 1996; 61 FR 16060, Apr. 11, 1996; 61 FR 30162, June 14, 1996; 61 FR 52850, Oct. 8, 1996; 62 FR 44903, Aug. 25, 1997; 63 FR 9151, Feb. 24, 1998; 63 FR 17333, Apr. 9, 1998]

§ 51.101 Stipulations.

Nothing in this part will be construed in any manner:

(a) To encourage a State to prepare, adopt, or submit a plan which does not provide for the protection and enhancement of air quality so as to promote the public health and welfare and productive capacity.

(b) To encourage a State to adopt any particular control strategy without taking into consideration the cost-effectiveness of such control strategy

in relation to that of alternative control strategies.

(c) To preclude a State from employing techniques other than those specified in this part for purposes of estimating air quality or demonstrating the adequacy of a control strategy, provided that such other techniques are shown to be adequate and appropriate for such purposes.

(d) To encourage a State to prepare, adopt, or submit a plan without taking into consideration the social and economic impact of the control strategy set forth in such plan, including, but not limited to, impact on availability of fuels, energy, transportation, and employment.

(e) To preclude a State from preparing, adopting, or submitting a plan which provides for attainment and maintenance of a national standard through the application of a control strategy not specifically identified or described in this part.

(f) To preclude a State or political subdivision thereof from adopting or enforcing any emission limitations or other measures or combinations thereof to attain and maintain air quality better than that required by a national standard.

(g) To encourage a State to adopt a control strategy uniformly applicable throughout a region unless there is no satisfactory alternative way of providing for attainment and maintenance of a national standard throughout such region.

[61 FR 30163, June 14, 1996]

§51.102 Public hearings.

(a) Except as otherwise provided in paragraph (c) of this section, States must conduct one or more public hearings on the following prior to adoption and submission to EPA of:

(1) Any plan or revision of it required by §51.104(a).

(2) Any individual compliance schedule under (§51.260).

(3) Any revision under §51.104(d).

(b) Separate hearings may be held for plans to implement primary and secondary standards.

(c) No hearing will be required for any change to an increment of progress in an approved individual compliance schedule unless such change is likely to cause the source to be unable to comply with the final compliance date in the schedule. The requirements of §§51.104 and 51.105 will be applicable to such schedules, however.

(d) Any hearing required by paragraph (a) of this section will be held only after reasonable notice, which will be considered to include, at least 30 days prior to the date of such hearing(s):

(1) Notice given to the public by prominent advertisement in the area affected announcing the date(s), time(s), and place(s) of such hearing(s);

(2) Availability of each proposed plan or revision for public inspection in at least one location in each region to which it will apply, and the availability of each compliance schedule for public inspection in at least one location in the region in which the affected source is located;

(3) Notification to the Administrator (through the appropriate Regional Office);

(4) Notification to each local air pollution control agency which will be significantly impacted by such plan, schedule or revision;

(5) In the case of an interstate region, notification to any other States included, in whole or in part, in the regions which are significantly impacted by such plan or schedule or revision.

(6) In the case of hearings on AQMA plans:

(i) Notification to the chief executives of affected local governments, planning agencies, transportation agencies, environmental control agencies, economic development agencies, and any other affected States, and

(ii) Public notice of alternative analysis and plan development procedures approved under §51.63.

(e) The State must prepare and retain, for inspection by the Administrator upon request, a record of each hearing. The record must contain, as a minimum, a list of witnesses together with the text of each presentation.

(f) The State must submit with the plan, revision, or schedule a certification that the hearing required by paragraph (a) of this section was held in accordance with the notice required by paragraph (d) of this section.

(g) Upon written application by a State agency (through the appropriate Regional Office), the Administrator may approve State procedures for public hearings. The following criteria apply:

(1) Procedures approved under this section shall be deemed to satisfy the requirement of this part regarding public hearings.

(2) Procedures different from this part may be approved if they—

(i) Ensure public participation in matters for which hearings are required; and

(ii) Provide adequate public notification of the opportunity to participate.

(3) The Administrator may impose any conditions on approval he or she deems necessary.

§ 51.103 Submission of plans, preliminary review of plans.

(a) The State makes an official plan submission to EPA only when the submission conforms to the requirements of appendix V to this part, and the State delivers five copies of the plan to the appropriate Regional Office, with a letter giving notice of such action.

(b) Upon request of a State, the Administrator will provide preliminary review of a plan or portion thereof submitted in advance of the date such plan is due. Such requests must be made in writing to the appropriate Regional Office and must be accompanied by five copies of the materials to be reviewed. Requests for preliminary review do not relieve a State of the responsibility of adopting and submitting plans in accordance with prescribed due dates.

[51 FR 40661, Nov. 7, 1986, as amended at 55 FR 5830, Feb. 16, 1990; 63 FR 9151, Feb. 24, 1998]

§ 51.104 Revisions.

(a) States may revise the plan from time to time consistent with the requirements applicable to implementation plans under this part.

(b) The States must submit any revision of any regulation or any compliance schedule under paragraph (c) of this section to the Administrator no later than 60 days after its adoption.

(c) EPA will approve revisions only after applicable hearing requirements of § 51.102 have been satisfied.

(d) In order for a variance to be considered for approval as a revision to the State implementation plan, the State must submit it in accordance with the requirements of this section.

[51 FR 40661, Nov. 7, 1986, as amended at 61 FR 16060, Apr. 11, 1996]

§ 51.105 Approval of plans.

Revisions of a plan, or any portion thereof, will not be considered part of an applicable plan until such revisions have been approved by the Administrator in accordance with this part.

[51 FR 40661, Nov. 7, 1986, as amended at 60 FR 33922, June 29, 1995]

Subpart G—Control Strategy

SOURCE: 51 FR 40665, Nov. 7, 1986, unless otherwise noted.

§ 51.110 Attainment and maintenance of national standards.

(a) Each plan providing for the attainment of a primary or secondary standard must specify the projected attainment date.

(b)–(f) [Reserved]

(g) During developing of the plan, EPA encourages States to identify alternative control strategies, as well as the costs and benefits of each such alternative for attainment or maintenance of the national standard.

[51 FR 40661 Nov. 7, 1986 as amended at 61 FR 16060, Apr. 11, 1996; 61 FR 30163, June 14, 1996]

§ 51.111 Description of control measures.

Each plan must set forth a control strategy which includes the following:

(a) A description of enforcement methods including, but not limited to:

(1) Procedures for monitoring compliance with each of the selected control measures,

(2) Procedures for handling violations, and

(3) A designation of agency responsibility for enforcement of implementation.

(b) [Reserved]

[51 FR 40665, Nov. 7, 1986, as amended at 60 FR 33922, June 29, 1995]

§51.112 Demonstration of adequacy.

(a) Each plan must demonstrate that the measures, rules, and regulations contained in it are adequate to provide for the timely attainment and maintenance of the national standard that it implements.

(1) The adequacy of a control strategy shall be demonstrated by means of applicable air quality models, data bases, and other requirements specified in appendix W of this part (Guideline on Air Quality Models).

(2) Where an air quality model specified in appendix W of this part (Guideline on Air Quality Models) is inappropriate, the model may be modified or another model substituted. Such a modification or substitution of a model may be made on a case-by-case basis or, where appropriate, on a generic basis for a specific State program. Written approval of the Administrator must be obtained for any modification or substitution. In addition, use of a modified or substituted model must be subject to notice and opportunity for public comment under procedures set forth in §51.102.

(b) The demonstration must include the following:

(1) A summary of the computations, assumptions, and judgments used to determine the degree of reduction of emissions (or reductions in the growth of emissions) that will result from the implementation of the control strategy.

(2) A presentation of emission levels expected to result from implementation of each measure of the control strategy.

(3) A presentation of the air quality levels expected to result from implementation of the overall control strategy presented either in tabular form or as an isopleth map showing expected maximum pollutant concentrations.

(4) A description of the dispersion models used to project air quality and to evaluate control strategies.

(5) For interstate regions, the analysis from each constituent State must, where practicable, be based upon the same regional emission inventory and air quality baseline.

[51 FR 40665, Nov. 7, 1986, as amended at 58 FR 38821, July 20, 1993; 60 FR 40468, Aug. 9, 1995; 61 FR 41840, Aug. 12, 1996]

§51.113 [Reserved]

§51.114 Emissions data and projections.

(a) Except for lead, each plan must contain a detailed inventory of emissions from point and area sources. Lead requirements are specified in §51.117. The inventory must be based upon measured emissions or, where measured emissions are not available, documented emission factors.

(b) Each plan must contain a summary of emission levels projected to result from application of the new control strategy.

(c) Each plan must identify the sources of the data used in the projection of emissions.

§51.115 Air quality data and projections.

(a) Each plan must contain a summary of data showing existing air quality.

(b) Each plan must:

(1) Contain a summary of air quality concentrations expected to result from application of the control strategy, and

(2) Identify and describe the dispersion model, other air quality model, or receptor model used.

(c) Actual measurements of air quality must be used where available if made by methods specified in appendix C to part 58 of this chapter. Estimated air quality using appropriate modeling techniques may be used to supplement measurements.

(d) For purposes of developing a control strategy, background concentration shall be taken into consideration with respect to particulate matter. As used in this subpart, background concentration is that portion of the measured ambient levels that cannot be reduced by controlling emissions from man-made sources.

(e) In developing an ozone control strategy for a particular area, background ozone concentrations and ozone transported into an area must be considered. States may assume that the ozone standard will be attained in upwind areas.

§ 51.116 Data availability.

(a) The State must retain all detailed data and calculations used in the preparation of each plan or each plan revision, and make them available for public inspection and submit them to the Administrator at his request.

(b) The detailed data and calculations used in the preparation of plan revisions are not considered a part of the plan.

(c) Each plan must provide for public availability of emission data reported by source owners or operators or otherwise obtained by a State or local agency. Such emission data must be correlated with applicable emission limitations or other measures. As used in this paragraph, *correlated* means presented in such a manner as to show the relationship between measured or estimated amounts of emissions and the amounts of such emissions allowable under the applicable emission limitations or other measures.

§ 51.117 Additional provisions for lead.

In addition to other requirements in §§ 51.100 through 51.116 the following requirements apply to lead. To the extent they conflict, there requirements are controlling over those of the proceeding sections.

(a) *Control strategy demonstration.* Each plan must contain a demonstration showing that the plan will attain and maintain the standard in the following areas:

(1) Areas in the vicinity of the following point sources of lead: Primary lead smelters, Secondary lead smelters, Primary copper smelters, Lead gasoline additive plants, Lead-acid storage battery manufacturing plants that produce 2,000 or more batteries per day. Any other stationary source that actually emits 25 or more tons per year of lead or lead compounds measured as elemental lead.

(2) Any other area that has lead air concentrations in excess of the national ambient air quality standard concentration for lead, measured since January 1, 1974.

(b) *Time period for demonstration of adequacy.* The demonstration of adequacy of the control strategy required under § 51.112 may cover a longer period if allowed by the appropriate EPA Regional Administrator.

(c) *Special modeling provisions.* (1) For urbanized areas with measured lead concentrations in excess of 4.0 $\mu g/m^3$, quarterly mean measured since January 1, 1974, the plan must employ the modified rollback model for the demonstration of attainment as a minimum, but may use an atmospheric dispersion model if desired, consistent with requirements contained in § 51.112(a). If a proportional model is used, the air quality data should be the same year as the emissions inventory required under the paragraph e.

(2) For each point source listed in § 51.117(a), that plan must employ an atmospheric dispersion model for demonstration of attainment, consistent with requirements contained in § 51.112(a).

(3) For each area in the vicinity of an air quality monitor that has recorded lead concentrations in excess of the lead national standard concentration, the plan must employ the modified rollback model as a minimum, but may use an atmospheric dispersion model if desired for the demonstration of attainment, consistent with requirements contained in § 51.112(a).

(d) *Air quality data and projections.* (1) Each State must submit to the appropriate EPA Regional Office with the plan, but not part of the plan, all lead air quality data measured since January 1, 1974. This requirement does not apply if the data has already been submitted.

(2) The data must be submitted in accordance with the procedures and data forms specified in Chapter 3.4.0 of the ''AEROS User's Manual'' concerning storage and retrieval of aerometric data (SAROAD) except where the Regional Administrator waives this requirement.

(3) If additional lead air quality data are desired to determine lead air concentrations in areas suspected of exceeding the lead national ambient air quality standard, the plan may include data from any previously collected filters from particulate matter high volume samplers. In determining the lead content of the filters for control strategy demonstration purposes, a State may use, in addition to the reference

method, X-ray fluorescence or any other method approved by the Regional Administrator.

(e) *Emissions data.* (1) The point source inventory on which the summary of the baseline lead emissions inventory is based must contain all sources that emit five or more tons of lead per year.

(2) Each State must submit lead emissions data to the appropriate EPA Regional Office with the original plan. The submission must be made with the plan, but not as part of the plan, and must include emissions data and information related to point and area source emissions. The emission data and information should include the information identified in the Hazardous and Trace Emissions System (HATREMS) point source coding forms for all point sources and the area source coding forms for all sources that are not point sources, but need not necessarily be in the format of those forms.

[41 FR 18388, May 3, 1976, as amended at 58 FR 38822, July 20, 1993]

§51.118 Stack height provisions.

(a) The plan must provide that the degree of emission limitation required of any source for control of any air pollutant must not be affected by so much of any source's stack height that exceeds good engineering practice or by any other dispersion technique, except as provided in §51.118(b). The plan must provide that before a State submits to EPA a new or revised emission limitation that is based on a good engineering practice stack height that exceeds the height allowed by §51.100(ii) (1) or (2), the State must notify the public of the availabilty of the demonstration study and must provide opportunity for a public hearing on it. This section does not require the plan to restrict, in any manner, the actual stack height of any source.

(b) The provisions of §51.118(a) shall not apply to (1) stack heights in existence, or dispersion techniques implemented on or before December 31, 1970, except where pollutants are being emitted from such stacks or using such dispersion techniques by sources, as defined in section 111(a)(3) of the Clean Air Act, which were constructed, or reconstructed, or for which major modifications, as defined in §§51.165(a)(1)(v)(A), 51.166(b)(2)(i) and 52.21(b)(2)(i), were carried out after December 31, 1970; or (2) coal-fired steam electric generating units subject to the provisions of section 118 of the Clean Air Act, which commenced operation before July 1, 1957, and whose stacks were construced under a construction contract awarded before February 8, 1974.

§51.119 Intermittent control systems.

(a) The use of an intermittent control system (ICS) may be taken into account in establishing an emission limitation for a pollutant under a State implementation plan, provided:

(1) The ICS was implemented before December 31, 1970, according to the criteria specified in §51.119(b).

(2) The extent to which the ICS is taken into account is limited to reflect emission levels and associated ambient pollutant concentrations that would result if the ICS was the same as it was before December 31, 1970, and was operated as specified by the operating system of the ICS before December 31, 1970.

(3) The plan allows the ICS to compensate only for emissions from a source for which the ICS was implemented before December 31, 1970, and, in the event the source has been modified, only to the extent the emissions correspond to the maximum capacity of the source before December 31, 1970. For purposes of this paragraph, a source for which the ICS was implemented is any particular structure or equipment the emissions from which were subject to the ICS operating procedures.

(4) The plan requires the continued operation of any constant pollution control system which was in use before December 31, 1970, or the equivalent of that system.

(5) The plan clearly defines the emission limits affected by the ICS and the manner in which the ICS is taken into account in establishing those limits.

(6) The plan contains requirements for the operation and maintenance of the qualifying ICS which, together with the emission limitations and any

other necessary requirements, will assure that the national ambient air quality standards and any applicable prevention of significant deterioration increments will be attained and maintained. These requirements shall include, but not necessarily be limited to, the following:

(i) Requirements that a source owner or operator continuously operate and maintain the components of the ICS specified at § 51.119(b)(3) (ii)–(iv) in a manner which assures that the ICS is at least as effective as it was before December 31, 1970. The air quality monitors and meteorological instrumentation specified at § 51.119(b) may be operated by a local authority or other entity provided the source has ready access to the data from the monitors and instrumentation.

(ii) Requirements which specify the circumstances under which, the extent to which, and the procedures through which, emissions shall be curtailed through the activation of ICS.

(iii) Requirements for recordkeeping which require the owner or operator of the source to keep, for periods of at least 3 years, records of measured ambient air quality data, meteorological information acquired, and production data relating to those processes affected by the ICS.

(iv) Requirements for reporting which require the owner or operator of the source to notify the State and EPA within 30 days of a NAAQS violation pertaining to the pollutant affected by the ICS.

(7) Nothing in this paragraph affects the applicability of any new source review requirements or new source performance standards contained in the Clean Air Act or 40 CFR subchapter C. Nothing in this paragraph precludes a State from taking an ICS into account in establishing emission limitations to any extent less than permitted by this paragraph.

(b) An intermittent control system (ICS) may be considered implemented for a pollutant before December 31, 1970, if the following criteria are met:

(1) The ICS must have been established and operational with respect to that pollutant prior to December 31, 1970, and reductions in emissions of that pollutant must have occurred when warranted by meteorological and ambient monitoring data.

(2) The ICS must have been designed and operated to meet an air quality objective for that pollutant such as an air quality level or standard.

(3) The ICS must, at a minimum, have included the following components prior to December 31, 1970:

(i) *Air quality monitors.* An array of sampling stations whose location and type were consistent with the air quality objective and operation of the system.

(ii) *Meteorological instrumentation.* A meteorological data acquisition network (may be limited to a single station) which provided meteorological prediction capabilities sufficient to determine the need for, and degree of, emission curtailments necessary to achieve the air quality design objective.

(iii) *Operating system.* A system of established procedures for determining the need for curtailments and for accomplishing such curtailments. Documentation of this system, as required by paragraph (n)(4), may consist of a compendium of memoranda or comparable material which define the criteria and procedures for curtailments and which identify the type and number of personnel authorized to initiate curtailments.

(iv) *Meteorologist.* A person, schooled in meteorology, capable of interpreting data obtained from the meteorological network and qualified to forecast meteorological incidents and their effect on ambient air quality. Sources may have obtained meteorological services through a consultant. Services of such a consultant could include sufficient training of source personnel for certain operational procedures, but not for design, of the ICS.

(4) Documentation sufficient to support the claim that the ICS met the criteria listed in this paragraph must be provided. Such documentation may include affidavits or other documentation.

§ 51.120 Requirements for State Implementation Plan revisions relating to new motor vehicles.

(a) The EPA Administrator finds that the State Implementation Plans (SIPs)

for the States of Connecticut, Delaware, Maine, Maryland, Massachusetts, New Hampshire, New Jersey, New York, Pennsylvania, Rhode Island, and Vermont, the portion of Virginia included (as of November 15, 1990) within the Consolidated Metropolitan Statistical Area that includes the District of Columbia, are substantially inadequate to comply with the requirements of section 110(a)(2)(D) of the Clean Air Act, 42 U.S.C. 7410(a)(2)(D), and to mitigate adequately the interstate pollutant transport described in section 184 of the Clean Air Act, 42 U.S.C. 7511C, to the extent that they do not provide for emission reductions from new motor vehicles in the amount that would be achieved by the Ozone Transport Commission low emission vehicle (OTC LEV) program described in paragraph (c) of this section. This inadequacy will be deemed cured for each of the aforementioned States (including the District of Columbia) in the event that EPA determines through rulemaking that a national LEV-equivalent new motor vehicle emission control program is an acceptable alternative for OTC LEV and finds that such program is in effect. In the event no such finding is made, each of those States must adopt and submit to EPA by February 15, 1996 a SIP revision meeting the requirements of paragraph (b) of this section in order to cure the SIP inadequacy.

(b) If a SIP revision is required under paragraph (a) of this section, it must contain the OTC LEV program described in paragraph (c) of this section unless the State adopts and submits to EPA, as a SIP revision, other emission-reduction measures sufficient to meet the requirements of paragraph (d) of this section. If a State adopts and submits to EPA, as a SIP revision, other emission-reduction measures pursuant to paragraph (d) of this section, then for purposes of determining whether such a SIP revision is complete within the meaning of section 110(k)(1) (and hence is eligible at least for consideration to be approved as satisfying paragraph (d) of this section), such a SIP revision must contain other adopted emission-reduction measures that, together with the identified potentially broadly practicable measures, achieve at least the minimum level of emission reductions that could potentially satisfy the requirements of paragraph (d) of this section. All such measures must be fully adopted and enforceable.

(c) The OTC LEV program is a program adopted pursuant to section 177 of the Clean Air Act.

(1) The OTC LEV program shall contain the following elements:

(i) It shall apply to all new 1999 and later model year passenger cars and light-duty trucks (0–5750 pounds loaded vehicle weight), as defined in Title 13, California Code of Regulations, section 1900(b)(11) and (b)(8), respectively, that are sold, imported, delivered, purchased, leased, rented, acquired, received, or registered in any area of the State that is in the Northeast Ozone Transport Region as of December 19, 1994.

(ii) All vehicles to which the OTC LEV program is applicable shall be required to have a certificate from the California Air Resources Board (CARB) affirming compliance with California standards.

(iii) All vehicles to which this LEV program is applicable shall be required to meet the mass emission standards for Non-Methane Organic Gases (NMOG), Carbon Monoxide (CO), Oxides of Nitrogen (NO_X), Formaldehyde (HCHO), and particulate matter (PM) as specified in Title 13, California Code of Regulations, section 1960.1(f)(2) (and formaldehyde standards under section 1960.1(e)(2), as applicable) or as specified by California for certification as a TLEV (Transitional Low-Emission Vehicle), LEV (Low-Emission Vehicle), ULEV (Ultra-Low-Emission Vehicle), or ZEV (Zero-Emission Vehicle) under section 1960.1(g)(1) (and section 1960.1(e)(3), for formaldehyde standards, as applicable).

(iv) All manufacturers of vehicles subject to the OTC LEV program shall be required to meet the fleet average NMOG exhaust emission values for production and delivery for sale of their passenger cars, light-duty trucks 0–3750 pounds loaded vehicle weight, and light-duty trucks 3751–5750 pounds loaded vehicle weight specified in Title 13, California Code of Regulations, section 1960.1(g)(2) for each model year beginning in 1999. A State may determine

not to implement the NMOG fleet average in the first model year of the program if the State begins implementation of the program late in a calendar year. However, all States must implement the NMOG fleet average in any full model years of the LEV program.

(v) All manufacturers shall be allowed to average, bank and trade credits in the same manner as allowed under the program specified in Title 13, California Code of Regulations, section 1960.1(g)(2) footnote 7 for each model year beginning in 1999. States may account for credits banked by manufacturers in California or New York in years immediately preceding model year 1999, in a manner consistent with California banking and discounting procedures.

(vi) The provisions for small volume manufacturers and intermediate volume manufacturers, as applied by Title 13, California Code of Regulations to California's LEV program, shall apply. Those manufacturers defined as small volume manufacturers and intermediate volume manufacturers in California under California's regulations shall be considered small volume manufacturers and intermediate volume manufacturers under this program.

(vii) The provisions for hybrid electric vehicles (HEVs), as defined in Title 13 California Code of Regulations, section 1960.1, shall apply for purposes of calculating fleet average NMOG values.

(viii) The provisions for fuel-flexible vehicles and dual-fuel vehicles specified in Title 13, California Code of Regulations, section 1960.1(g)(1) footnote 4 shall apply.

(ix) The provisions for reactivity adjustment factors, as defined by Title 13, California Code of Regulations, shall apply.

(x) The aforementioned State OTC LEV standards shall be identical to the aforementioned California standards as such standards exist on December 19, 1994.

(xi) All States' OTC LEV programs must contain any other provisions of California's LEV program specified in Title 13, California Code of Regulations necessary to comply with section 177 of the Clean Air Act.

(2) States are not required to include the mandate for production of ZEVs specified in Title 13, California Code of Regulations, section 1960.1(g)(2) footnote 9.

(3) Except as specified elsewhere in this section, States may implement the OTC LEV program in any manner consistent with the Act that does not decrease the emissions reductions or jeopardize the effectiveness of the program.

(d) The SIP revision that paragraph (b) of this section describes as an alternative to the OTC LEV program described in paragraph (c) of this section must contain a set of State-adopted measures that provides at least the following amount of emission reductions in time to bring serious ozone nonattainment areas into attainment by their 1999 attainment date:

(1) Reductions at least equal to the difference between:

(i) The nitrogen oxides (NO_X) emission reductions from the 1990 statewide emissions inventory achievable through implementation of all of the Clean Air Act-mandated and potentially broadly practicable control measures throughout all portions of the State that are within the Northeast Ozone Transport Region created under section 184(a) of the Clean Air Act as of December 19, 1994; and

(ii) A reduction in NO_X emissions from the 1990 statewide inventory in such portions of the State of 50% or whatever greater reduction is necessary to prevent significant contribution to nonattainment in, or interference with maintenance by, any downwind State.

(2) Reductions at least equal to the difference between:

(i) The VOC emission reductions from the 1990 statewide emissions inventory achievable through implementation of all of the Clean Air Act-mandated and potentially broadly practicable control measures in all portions of the State in, or near and upwind of, any of the serious or severe ozone nonattainment areas lying in the series of such areas running northeast from the Washington, DC, ozone nonattainment area to and including the Portsmouth, New Hampshire ozone nonattainment area; and

(ii) A reduction in VOC emissions from the 1990 emissions inventory in

all such areas of 50% or whatever greater reduction is necessary to prevent significant contribution to nonattainment in, or interference with maintenance by, any downwind State.

[60 FR 4736, Jan. 24, 1995]

§51.121 Findings and requirements for submission of State implementation plan revisions relating to emissions of oxides of nitrogen.

(a)(1) The Administrator finds that the State implementation plan (SIP) for each jurisdiction listed in paragraph (c) of this section is substantially inadequate to comply with the requirements of section 110(a)(2)(D)(i)(I) of the Clean Air Act (CAA), 42 U.S.C. 7410(a)(2)(D)(i)(I), because the SIP does not include adequate provisions to prohibit sources and other activities from emitting nitrogen oxides (''NO_X'') in amounts that will contribute significantly to nonattainment in one or more other States with respect to the 1-hour ozone national ambient air quality standards (NAAQS). Each of the jurisdictions listed in paragraph (c) of this section must submit to EPA a SIP revision that cures the inadequacy.

(2) Under section 110(a)(1) of the CAA, 42 U.S.C. 7410(a)(1), the Administrator determines that each jurisdiction listed in paragraph (c) of this section must submit a SIP revision to comply with the requirements of section 110(a)(2)(D)(i)(I), 42 U.S.C. 7410(a)(2)(D)(i)(I), through the adoption of adequate provisions prohibiting sources and other activities from emitting NO_X in amounts that will contribute significantly to nonattainment in, or interfere with maintenance by, one or more other States with respect to the 8-hour ozone NAAQS.

(b)(1) For each jurisdiction listed in paragraph (c) of this section, the SIP revision required under paragraph (a) of this section will contain adequate provisions, for purposes of complying with section 110(a)(2)(D)(i)(I) of the CAA, 42 U.S.C. 7410(a)(2)(D)(i)(I), only if the SIP revision:

(i) Contains control measures adequate to prohibit emissions of NO_X that would otherwise be projected, in accordance with paragraph (g) of this section, to cause the jurisdiction's overall NO_X emissions to be in excess of the budget for that jurisdiction described in paragraph (e) of this section (except as provided in paragraph (b)(2) of this section),

(ii) Requires full implementation of all such control measures by no later than May 1, 2003, and

(iii) Meets the other requirements of this section. The SIP revision's compliance with the requirement of paragraph (b)(1)(i) of this section shall be considered compliance with the jurisdiction's budget for purposes of this section.

(2) The requirements of paragraph (b)(1)(i) of this section shall be deemed satisfied, for the portion of the budget covered by an interstate trading program, if the SIP revision:

(i) Contains provisions for an interstate trading program that EPA determines will, in conjunction with interstate trading programs for one or more other jurisdictions, prohibit NO_X emissions in excess of the sum of the portion of the budgets covered by the trading programs for those jurisdictions; and

(ii) Conforms to the following criteria:

(A) Emissions reductions used to demonstrate compliance with the revision must occur during the ozone season.

(B) Emissions reductions occurring prior to the year 2003 may be used by a source to demonstrate compliance with the SIP revision for the 2003 and 2004 ozone seasons, provided the SIP's provisions regarding such use comply with the requirements of paragraph (e)(3) of this section.

(C) Emissions reduction credits or emissions allowances held by a source or other person following the 2003 ozone season or any ozone season thereafter that are not required to demonstrate compliance with the SIP for the relevant ozone season may be banked and used to demonstrate compliance with the SIP in a subsequent ozone season.

(D) Early reductions created according to the provisions in paragraph (b)(2)(ii)(B) of this section and used in the 2003 ozone season are not subject to the flow control provisions set forth in paragraph (b)(2)(ii)(E) of this section.

(E) Starting with the 2004 ozone season, the SIP shall include provisions to limit the use of banked emissions reduction credits or emissions allowances beyond a predetermined amount as calculated by one of the following approaches:

(*1*) Following the determination of compliance after each ozone season, if the total number of emissions reduction credits or banked allowances held by sources or other persons subject to the trading program exceeds 10 percent of the sum of the allowable ozone season NO_X emissions for all sources subject to the trading program, then all banked allowances used for compliance for the following ozone season shall be subject to the following:

(*i*) A ratio will be established according to the following formula: (0.10) × (the sum of the allowable ozone season NO_X emissions for all sources subject to the trading program) ÷ (the total number of banked emissions reduction credits or emissions allowances held by all sources or other persons subject to the trading program).

(*ii*) The ratio, determined using the formula specified in paragraph (b)(2)(ii)(E)(1)(i) of this section, will be multiplied by the number of banked emissions reduction credits or emissions allowances held in each account at the time of compliance determination. The resulting product is the number of banked emissions reduction credits or emissions allowances in the account which can be used in the current year's ozone season at a rate of 1 credit or allowance for every 1 ton of emissions. The SIP shall specify that banked emissions reduction credits or emissions allowances in excess of the resulting product either may not be used for compliance, or may only be used for compliance at a rate no less than 2 credits or allowances for every 1 ton of emissions.

(*2*) At the time of compliance determination for each ozone season, if the total number of banked emissions reduction credits or emissions allowances held by a source subject to the trading program exceeds 10 percent of the source's allowable ozone season NO_X emissions, all banked emissions reduction credits or emissions allowances used for compliance in such ozone season by the source shall be subject to the following:

(*i*) The source may use an amount of banked emissions reduction credits or emissions allowances not greater than 10 percent of the source's allowable ozone season NO_X emissions for compliance at a rate of 1 credit or allowance for every 1 ton of emissions.

(*ii*) The SIP shall specify that banked emissions reduction credits or emissions allowances in excess of 10 percent of the source's allowable ozone season NO_X emissions may not be used for compliance, or may only be used for compliance at a rate no less than 2 credits or allowances for every 1 ton of emissions.

(c) The following jurisdictions (hereinafter referred to as ''States'') are subject to the requirements of this section: Alabama, Connecticut, Delaware, Georgia, Illinois, Indiana, Kentucky, Maryland, Massachusetts, Michigan, Missouri, New Jersey, New York, North Carolina, Ohio, Pennsylvania, Rhode Island, South Carolina, Tennessee, Virginia, West Virginia, Wisconsin, and the District of Columbia.

(d)(1) The SIP submissions required under paragraph (a) of this section must be submitted to EPA by no later than September 30, 1999.

(2) The State makes an official submission of its SIP revision to EPA only when:

(i) The submission conforms to the requirements of appendix V to this part; and

(ii) The State delivers five copies of the plan to the appropriate Regional Office, with a letter giving notice of such action.

(e)(1) The NO_X budget for a State listed in paragraph (c) of this section is defined as the total amount of NO_X emissions from all sources in that State, as indicated in paragraph (e)(2) of this section with respect to that State, which the State must demonstrate that it will not exceed in the 2007 ozone season pursuant to paragraph (g)(1) of this section.

(2) The State-by-State amounts of the NO_X budget, expressed in tons, are as follows:

State	Budget
Alabama	172,037

State	Budget
Connecticut	43,081
Delaware	22,789
District of Columbia	6,672
Georgia	189,634
Illinois	274,799
Indiana	238,970
Kentucky	155,619
Maryland	81,625
Massachusetts	85,296
Michigan	224,582
Missouri	128,146
New Jersey	100,133
New York	240,123
North Carolina	168,373
Ohio	250,930
Pennsylvania	257,441
Rhode Island	9,810
South Carolina	124,211
Tennessee	197,664
Virginia	185,027
West Virginia	91,216
Wisconsin	136,172
Total	3,384,350

(3)(i) Notwithstanding the State's obligation to comply with the budgets set forth in paragraph (e)(2) of this section, a SIP revision may allow sources required by the revision to implement NO_X emission control measures by May 1, 2003 to demonstrate compliance in the 2003 and 2004 ozone seasons using credit issued from the State's compliance supplement pool, as set forth in paragraph (e)(3)(iii) of this section.

(ii) A source may not use credit from the compliance supplement pool to demonstrate compliance after the 2004 ozone season.

(iii) The State-by-State amounts of the compliance supplement pool are as follows:

State	Compliance supplement pool (tons of NO_X)
Alabama	11,350
Connecticut	549
Delaware	127
District of Columbia	0
Georgia	11,179
Illinois	17,586
Indiana	20,390
Kentucky	14,495
Maryland	3,840
Massachusetts	397
Michigan	11,103
Missouri	10,783
New Jersey	1,479
New York	2,370
North Carolina	10,544
Ohio	22,320
Pennsylvania	15,662
Rhode Island	15
South Carolina	5,122
Tennessee	10,557
Virginia	6,914
West Virginia	16,410
Wisconsin	6,808
Total	200,000

(iv) The SIP revision may provide for the distribution of the compliance supplement pool to sources that are required to implement control measures using one or both of the following two mechanisms:

(A) The State may issue some or all of the compliance supplement pool to sources that implement emissions reductions during the ozone season beyond all applicable requirements in years prior to the year 2003 according to the following provisions:

(1) The State shall complete the issuance process by no later than May 1, 2003.

(2) The emissions reduction may not be required by the State's SIP or be otherwise required by the CAA.

(*3*) The emissions reduction must be verified by the source as actually having occurred during an ozone season between September 30, 1999 and May 1, 2003.

(*4*) The emissions reduction must be quantified according to procedures set forth in the SIP revision and approved by EPA. Emissions reductions implemented by sources serving electric generators with a nameplate capacity greater than 25 MWe, or boilers, combustion turbines or combined cycle units with a maximum design heat input greater than 250 mmBtu/hr, must be quantified according to the requirements in paragraph (i)(4) of this section.

(*5*) If the SIP revision contains approved provisions for an emissions trading program, sources that receive credit according to the requirements of this paragraph may trade the credit to other sources or persons according to the provisions in the trading program.

(B) The State may issue some or all of the compliance supplement pool to sources that demonstrate a need for an extension of the May 1, 2003 compliance deadline according to the following provisions:

(*1*) The State shall initiate the issuance process by the later date of September 30, 2002 or after the State issues credit according to the procedures in paragraph (e)(3)(iv)(A) of this section.

(*2*) The State shall complete the issuance process by no later than May 1, 2003.

(*3*) The State shall issue credit to a source only if the source demonstrates the following:

(*i*) For a source used to generate electricity, compliance with the SIP revision's applicable control measures by May 1, 2003, would create undue risk for the reliability of the electricity supply. This demonstration must include a showing that it would not be feasible to import electricity from other electricity generation systems during the installation of control technologies necessary to comply with the SIP revision.

(*ii*) For a source not used to generate electricity, compliance with the SIP revision's applicable control measures by May 1, 2003, would create undue risk for the source or its associated industry to a degree that is comparable to the risk described in paragraph (e)(3)(iv)(B)(3)(i) of this section.

(*iii*) For a source subject to an approved SIP revision that allows for early reduction credits in accordance with paragraph (e)(3)(iv)(A) of this section, it was not possible for the source to comply with applicable control measures by generating early reduction credits or acquiring early reduction credits from other sources.

(*iv*) For a source subject to an approved emissions trading program, it was not possible to comply with applicable control measures by acquiring sufficient credit from other sources or persons subject to the emissions trading program.

(*4*) The State shall ensure the public an opportunity, through a public hearing process, to comment on the appropriateness of allocating compliance supplement pool credits to a source under paragraph (e)(3)(iv)(B) of this section.

(4) If, no later than February 22, 1999, any member of the public requests revisions to the source-specific data and vehicle miles traveled (VMT) and nonroad mobile growth rates, VMT distribution by vehicle class, average speed by roadway type, inspection and maintenance program parameters, and other input parameters used to establish the State budgets set forth in paragraph (e)(2) of this section or the 2007 baseline sub-inventory information set forth in paragraph (g)(2)(ii) of this section, then EPA will act on that request no later than April 23, 1999 provided:

(i) The request is submitted in electronic format;

(ii) Information is provided to corroborate and justify the need for the requested modification;

(iii) The request includes the following data information regarding any electricity-generating source at issue:

(A) Federal Information Placement System (FIPS) State Code;

(B) FIPS County Code;

(C) Plant name;

(D) Plant ID numbers (ORIS code preferred, State agency tracking number also or otherwise);

(E) Unit ID numbers (a unit is a boiler or other combustion device);

(F) Unit type;

(G) Primary fuel on a heat input basis;

(H) Maximum rated heat input capacity of unit;

(I) Nameplate capacity of the largest generator the unit serves;

(J) Ozone season heat inputs for the years 1995 and 1996;

(K) 1996 (or most recent) average NO_X rate for the ozone season;

(L) Latitude and longitude coordinates;

(M) Stack parameter information ;

(N) Operating parameter information;

(O) Identification of specific change to the inventory; and

(P) Reason for the change;

(iv) The request includes the following data information regarding any non-electricity generating point source at issue:

(A) FIPS State Code;

(B) FIPS County Code;

(C) Plant name;

(D) Facility primary standard industrial classification code (SIC);

(E) Plant ID numbers (NEDS, AIRS/AFS, and State agency tracking number also or otherwise);

(F) Unit ID numbers (a unit is a boiler or other combustion device);

(G) Primary source classification code (SCC);

(H) Maximum rated heat input capacity of unit;

(I) 1995 ozone season or typical ozone season daily NO_X emissions;

(J) 1995 existing NO_X control efficiency;

(K) Latitude and longitude coordinates;

(L) Stack parameter information;

(M) Operating parameter information;

(N) Identification of specific change to the inventory; and

(O) Reason for the change;

(v) The request includes the following data information regarding any stationary area source or nonroad mobile source at issue:

(A) FIPS State Code;

(B) FIPS County Code;

(C) Primary source classification code (SCC);

(D) 1995 ozone season or typical ozone season daily NO_X emissions;

(E) 1995 existing NO_X control efficiency;

(F) Identification of specific change to the inventory; and

(G) Reason for the change;

(vi) The request includes the following data information regarding any highway mobile source at issue:

(A) FIPS State Code;

(B) FIPS County Code;

(C) Primary source classification code (SCC) or vehicle type;

(D) 1995 ozone season or typical ozone season daily vehicle miles traveled (VMT);

(E) 1995 existing NO_X control programs;

(F) identification of specific change to the inventory; and

(G) reason for the change.

(f) Each SIP revision must set forth control measures to meet the NO_X budget in accordance with paragraph (b)(1)(i) of this section, which include the following:

(1) A description of enforcement methods including, but not limited to:

(i) Procedures for monitoring compliance with each of the selected control measures;

(ii) Procedures for handling violations; and

(iii) A designation of agency responsibility for enforcement of implementation.

(2) Should a State elect to impose control measures on fossil fuel-fired NO_X sources serving electric generators with a nameplate capacity greater than 25 MWe or boilers, combustion turbines or combined cycle units with a maximum design heat input greater than 250 mmBtu/hr as a means of meeting its NO_X budget, then those measures must:

(i)(A) Impose a NO_X mass emissions cap on each source;

(B) Impose a NO_X emissions rate limit on each source and assume maximum operating capacity for every such source for purposes of estimating mass NO_X emissions; or

(C) Impose any other regulatory requirement which the State has demonstrated to EPA provides equivalent or greater assurance than options in paragraphs (f)(2)(i)(A) or (f)(2)(i)(B) of this section that the State will comply with its NO_X budget in the 2007 ozone season; and

(ii) Impose enforceable mechanisms, in accordance with paragraphs (b)(1) (i) and (ii) of this section, to assure that collectively all such sources, including new or modified units, will not exceed in the 2007 ozone season the total NO_X emissions projected for such sources by the State pursuant to paragraph (g) of this section.

(3) For purposes of paragraph (f)(2) of this section, the term ''fossil fuel-fired'' means, with regard to a NO_X source:

(i) The combustion of fossil fuel, alone or in combination with any other fuel, where fossil fuel actually combusted comprises more than 50 percent of the annual heat input on a Btu basis during any year starting in 1995 or, if a NO_X source had no heat input starting in 1995, during the last year of operation of the NO_X source prior to 1995; or

(ii) The combustion of fossil fuel, alone or in combination with any other fuel, where fossil fuel is projected to comprise more than 50 percent of the

annual heat input on a Btu basis during any year; provided that the NO_X source shall be ''fossil fuel-fired'' as of the date, during such year, on which the NO_X source begins combusting fossil fuel.

(g)(1) Each SIP revision must demonstrate that the control measures contained in it are adequate to provide for the timely compliance with the State's NO_X budget during the 2007 ozone season.

(2) The demonstration must include the following:

(i) Each revision must contain a detailed baseline inventory of NO_X mass emissions from the following sources in the year 2007, absent the control measures specified in the SIP submission: electric generating units (EGU), non-electric generating units (non-EGU), area, nonroad and highway sources. The State must use the same baseline emissions inventory that EPA used in calculating the State's NO_X budget, as set forth for the State in paragraph (g)(2)(ii) of this section, except that EPA may direct the State to use different baseline inventory information if the State fails to certify that it has implemented all of the control measures assumed in developing the baseline inventory.

(ii) The base year 2007 NO_X emissions sub-inventories for each State, expressed in tons per ozone season, are as follows:

State	EGU	Non-EGU	Area	Nonroad	Highway	Total
Alabama	76,926	58,791	28,762	20,186	52,202	236,867
Connecticut	5,636	5,124	4,821	10,736	19,902	46,220
Delaware	5,838	2,370	1,129	5,651	8,524	23,512
District of Columbia	3	300	830	3,138	2,215	6,485
Georgia	86,455	36,827	13,212	26,497	90,499	253,489
Illinois	119,311	72,183	9,369	57,033	117,354	375,250
Indiana	136,773	80,884	29,070	26,536	82,170	355,433
Kentucky	107,829	29,328	31,807	15,042	54,406	238,412
Maryland	32,603	15,554	4,448	20,121	30,832	103,558
Massachusetts	16,479	11,229	11,048	20,166	28,641	87,563
Michigan	86,600	62,988	31,721	26,940	79,751	288,000
Missouri	82,097	26,870	7,341	20,875	52,554	189,737
New Jersey	18,352	18,345	12,431	23,565	35,890	108,584
New York	39,199	28,281	17,423	42,091	126,664	253,659
North Carolina	84,815	34,888	11,067	22,045	75,785	228,600
Ohio	163,132	53,074	21,860	43,780	96,572	378,418
Pennsylvania	123,102	82,270	17,842	30,635	93,052	346,900
Rhode Island	1,082	2,031	448	2,455	3,879	9,895
South Carolina	36,299	37,495	9,415	14,670	55,585	153,465
Tennessee	70,908	53,198	13,333	52,985	67,538	257,962
Virginia	40,884	54,414	27,738	27,867	73,619	224,521
West Virginia	115,490	32,235	5,459	10,438	21,325	184,947
Wisconsin	51,962	22,886	11,253	17,975	70,984	175,061
Total	1,501,775	821,563	321,826	541,428	1,339,944	4,526,538

Note: Totals may not sum due to rounding.

(iii) Each revision must contain a summary of NO_X mass emissions in 2007 projected to result from implementation of each of the control measures specified in the SIP submission and from all NO_X sources together following implementation of all such control measures, compared to the baseline 2007 NO_X emissions inventory for the State described in paragraph (g)(2)(i) of this section. The State must provide EPA with a summary of the computations, assumptions, and judgments used to determine the degree of reduction in projected 2007 NO_X emissions that will be achieved from the implementation of the new control measures compared to the baseline emissions inventory.

(iv) Each revision must identify the sources of the data used in the projection of emissions.

(h) Each revision must comply with § 51.116 of this part (regarding data availability).

(i) Each revision must provide for monitoring the status of compliance with any control measures adopted to meet the NO_X budget. Specifically, the revision must meet the following requirements:

(1) The revision must provide for legally enforceable procedures for requiring owners or operators of stationary sources to maintain records of and periodically report to the State:

(i) Information on the amount of NO_X emissions from the stationary sources; and

(ii) Other information as may be necessary to enable the State to determine whether the sources are in compliance with applicable portions of the control measures;

(2) The revision must comply with §51.212 of this part (regarding testing, inspection, enforcement, and complaints);

(3) If the revision contains any transportation control measures, then the revision must comply with §51.213 of this part (regarding transportation control measures);

(4) If the revision contains measures to control fossil fuel-fired NO_X sources serving electric generators with a nameplate capacity greater than 25 MWe or boilers, combustion turbines or combined cycle units with a maximum design heat input greater than 250 mmBtu/hr, then the revision must require such sources to comply with the monitoring provisions of part 75, subpart H.

(5) For purposes of paragraph (i)(4) of this section, the term ''fossil fuel-fired'' means, with regard to a NO_X source:

(i) The combustion of fossil fuel, alone or in combination with any other fuel, where fossil fuel actually combusted comprises more than 50 percent of the annual heat input on a Btu basis during any year starting in 1995 or, if a NO_X source had no heat input starting in 1995, during the last year of operation of the NO_X source prior to 1995; or

(ii) The combustion of fossil fuel, alone or in combination with any other fuel, where fossil fuel is projected to comprise more than 50 percent of the annual heat input on a Btu basis during any year, provided that the NO_X source shall be ''fossil fuel-fired'' as of the date, during such year, on which the NO_X source begins combusting fossil fuel.

(j) Each revision must show that the State has legal authority to carry out the revision, including authority to:

(1) Adopt emissions standards and limitations and any other measures necessary for attainment and maintenance of the State's NO_X budget specified in paragraph (e) of this section;

(2) Enforce applicable laws, regulations, and standards, and seek injunctive relief;

(3) Obtain information necessary to determine whether air pollution sources are in compliance with applicable laws, regulations, and standards, including authority to require recordkeeping and to make inspections and conduct tests of air pollution sources;

(4) Require owners or operators of stationary sources to install, maintain, and use emissions monitoring devices and to make periodic reports to the State on the nature and amounts of emissions from such stationary sources; also authority for the State to make such data available to the public as reported and as correlated with any applicable emissions standards or limitations.

(k)(1) The provisions of law or regulation which the State determines provide the authorities required under this section must be specifically identified, and copies of such laws or regulations must be submitted with the SIP revision.

(2) Legal authority adequate to fulfill the requirements of paragraphs (j)(3) and (4) of this section may be delegated to the State under section 114 of the CAA.

(l)(1) A revision may assign legal authority to local agencies in accordance with §51.232 of this part.

(2) Each revision must comply with §51.240 of this part (regarding general plan requirements).

(m) Each revision must comply with §51.280 of this part (regarding resources).

(n) For purposes of the SIP revisions required by this section, EPA may make a finding as applicable under section 179(a)(1)–(4) of the CAA, 42 U.S.C. 7509(a)(1)–(4), starting the sanctions process set forth in section 179(a) of the

CAA. Any such finding will be deemed a finding under § 52.31(c) of this part and sanctions will be imposed in accordance with the order of sanctions and the terms for such sanctions established in § 52.31 of this part.

(o) Each revision must provide for State compliance with the reporting requirements set forth in § 51.122 of this part.

(p)(1) Notwithstanding any other provision of this section, if a State adopts regulations substantively identical to 40 CFR part 96 (the model NO_X budget trading program for SIPs), incorporates such part by reference into its regulations, or adopts regulations that differ substantively from such part only as set forth in paragraph (p)(2) of this section, then that portion of the State's SIP revision is automatically approved as satisfying the same portion of the State's NO_X emission reduction obligations as the State projects such regulations will satisfy, provided that:

(i) The State has the legal authority to take such action and to implement its responsibilities under such regulations, and

(ii) The SIP revision accurately reflects the NO_X emissions reductions to be expected from the State's implementation of such regulations.

(2) If a State adopts an emissions trading program that differs substantively from 40 CFR part 96 in only the following respects, then such portion of the State's SIP revision is approved as set forth in paragraph (p)(1) of this section:

(i) The State may expand the applicability provisions of the trading program to include units (as defined in 40 CFR 96.2) that are smaller than the size criteria thresholds set forth in 40 CFR 96.4(a);

(ii) The State may decline to adopt the exemption provisions set forth in 40 CFR 96.4(b);

(iii) The State may decline to adopt the opt-in provisions set forth in subpart I of 40 CFR part 96;

(iv) The State may decline to adopt the allocation provisions set forth in subpart E of 40 CFR part 96 and may instead adopt any methodology for allocating NO_X allowances to individual sources, provided that:

(A) The State's methodology does not allow the State to allocate NO_X allowances in excess of the total amount of NO_X emissions which the State has assigned to its trading program; and

(B) The State's methodology conforms with the timing requirements for submission of allocations to the Administrator set forth in 40 CFR 96.41; and

(v) The State may decline to adopt the early reduction credit provisions set forth in 40 CFR 96.55(c) and may instead adopt any methodology for issuing credit from the State's compliance supplement pool that complies with paragraph (e)(3) of this section.

(3) If a State adopts an emissions trading program that differs substantively from 40 CFR part 96 other than as set forth in paragraph (p)(2) of this section, then such portion of the State's SIP revision is not automatically approved as set forth in paragraph (p)(1) of this section but will be reviewed by the Administrator for approvability in accordance with the other provisions of this section.

[63 FR 57491, Oct. 27, 1998, as amended at 63 FR 71225, Dec. 24, 1998; 64 FR 26305, May 14, 1999]

§ 51.122 Emissions reporting requirements for SIP revisions relating to budgets for NO_X emissions.

(a) For its transport SIP revision under § 51.121 of this part, each State must submit to EPA NO_X emissions data as described in this section.

(b) Each revision must provide for periodic reporting by the State of NO_X emissions data to demonstrate whether the State's emissions are consistent with the projections contained in its approved SIP submission.

(1) *Annual reporting.* Each revision must provide for annual reporting of NO_X emissions data as follows:

(i) The State must report to EPA emissions data from all NO_X sources within the State for which the State specified control measures in its SIP submission under § 51.121(g) of this part. This would include all sources for which the State has adopted measures that differ from the measures incorporated into the baseline inventory for the year 2007 that the State developed

in accordance with §51.121(g) of this part.

(ii) If sources report NO_X emissions data to EPA annually pursuant to a trading program approved under §51.121(p) of this part or pursuant to the monitoring and reporting requirements of subpart H of 40 CFR part 75, then the State need not provide annual reporting to EPA for such sources.

(2) *Triennial reporting.* Each plan must provide for triennial (i.e., every third year) reporting of NO_X emissions data from all sources within the State.

(3) *Year 2007 reporting.* Each plan must provide for reporting of year 2007 NO_X emissions data from all sources within the State.

(4) The data availability requirements in §51.116 of this part must be followed for all data submitted to meet the requirements of paragraphs (b)(1),(2) and (3) of this section.

(c) The data reported in paragraph (b) of this section for stationary point sources must meet the following minimum criteria:

(1) For annual data reporting purposes the data must include the following minimum elements:

(i) Inventory year.

(ii) State Federal Information Placement System code.

(iii) County Federal Information Placement System code.

(iv) Federal ID code (plant).

(v) Federal ID code (point).

(vi) Federal ID code (process).

(vii) Federal ID code (stack).

(vii) Site name.

(viii) Physical address.

(ix) SCC.

(x) Pollutant code.

(xi) Ozone season emissions.

(xii) Area designation.

(2) In addition, the annual data must include the following minimum elements as applicable to the emissions estimation methodology.

(i) Fuel heat content (annual).

(ii) Fuel heat content (seasonal).

(iii) Source of fuel heat content data.

(iv) Activity throughput (annual).

(v) Activity throughput (seasonal).

(vi) Source of activity/throughput data.

(vii) Spring throughput (%).

(viii) Summer throughput (%).

(ix) Fall throughput (%).

(x) Work weekday emissions.

(xi) Emission factor.

(xii) Source of emission factor.

(xiii) Hour/day in operation.

(xiv) Operations Start time (hour).

(xv) Day/week in operation.

(xvi) Week/year in operation.

(3) The triennial and 2007 inventories must include the following data elements:

(i) The data required in paragraphs (c)(1) and (c)(2) of this section.

(ii) X coordinate (latitude).

(iii) Y coordinate (longitude).

(iv) Stack height.

(v) Stack diameter.

(vi) Exit gas temperature.

(vii) Exit gas velocity.

(viii) Exit gas flow rate.

(ix) SIC.

(x) Boiler/process throughput design capacity.

(xi) Maximum design rate.

(xii) Maximum capacity.

(xiii) Primary control efficiency.

(xiv) Secondary control efficiency.

(xv) Control device type.

(d) The data reported in paragraph (b) of this section for area sources must include the following minimum elements:

(1) For annual inventories it must include:

(i) Inventory year.

(ii) State FIPS code.

(iii) County FIPS code.

(iv) SCC.

(v) Emission factor.

(vi) Source of emission factor.

(vii) Activity/throughput level (annual).

(viii) Activity throughput level (seasonal).

(ix) Source of activity/throughput data.

(x) Spring throughput (%).

(xi) Summer throughput (%).

(xii) Fall throughput (%).

(xiii) Control efficiency (%).

(xiv) Pollutant code.

(xv) Ozone season emissions.

(xvi) Source of emissions data.

(xvii) Hour/day in operation.

(xviii) Day/week in operation.

(xix) Week/year in operations.

(2) The triennial and 2007 inventories must contain, at a minimum, all the data required in paragraph (d)(1) of this section.

(e) The data reported in paragraph (b) of this section for mobile sources must meet the following minimum criteria:

(1) For the annual, triennial, and 2007 inventory purposes, the following data must be reported:

(i) Inventory year.

(ii) State FIPS code.

(iii) County FIPS code.

(iv) SCC.

(v) Emission factor.

(vi) Source of emission factor.

(vii) Activity (this must be reported for both highway and nonroad activity. Submit nonroad activity in the form of hours of activity at standard load (either full load or average load) for each engine type, application, and horsepower range. Submit highway activity in the form of vehicle miles traveled (VMT) by vehicle class on each roadway type. Report both highway and nonroad activity for a typical ozone season weekday day, if the State uses EPA's default weekday/weekend activity ratio. If the State uses a different weekday/weekend activity ratio, submit separate activity level information for weekday days and weekend days).

(viii) Source of activity data.

(ix) Pollutant code.

(x) Summer work weekday emissions.

(xi) Ozone season emissions.

(xii) Source of emissions data.

(2) [Reserved]

(f) *Approval of ozone season calculation by EPA.* Each State must submit for EPA approval an example of the calculation procedure used to calculate ozone season emissions along with sufficient information for EPA to verify the calculated value of ozone season emissions.

(g) *Reporting schedules.* (1) Annual reports are to begin with data for emissions occurring in the year 2003.

(2) Triennial reports are to begin with data for emissions occurring in the year 2002.

(3) Year 2007 data are to be submitted for emissions occurring in the year 2007.

(4) States must submit data for a required year no later than 12 months after the end of the calendar year for which the data are collected.

(h) *Data reporting procedures.* When submitting a formal NO_X budget emissions report and associated data, States shall notify the appropriate EPA Regional Office.

(1) States are required to report emissions data in an electronic format to one of the locations listed in this paragraph (h). Several options are available for data reporting.

(2) An agency may choose to continue reporting to the EPA Aerometric Information Retrieval System (AIRS) system using the AIRS facility subsystem (AFS) format for point sources. (This option will continue for point sources for some period of time after AIRS is reengineered (before 2002), at which time this choice may be discontinued or modified.)

(3) An agency may convert its emissions data into the Emission Inventory Improvement Program/Electronic Data Interchange (EIIP/EDI) format. This file can then be made available to any requestor, either using E-mail, floppy disk, or value added network (VAN), or can be placed on a file transfer protocol (FTP) site.

(4) An agency may submit its emissions data in a proprietary format based on the EIIP data model.

(5) For options in paragraphs (h)(3) and (4) of this section, the terms submitting and reporting data are defined as either providing the data in the EIIP/EDI format or the EIIP based data model proprietary format to EPA, Office of Air Quality Planning and Standards, Emission Factors and Inventory Group, directly or notifying this group that the data are available in the specified format and at a specific electronic location (e.g., FTP site).

(6) For annual reporting (not for triennial reports), a State may have sources submit the data directly to EPA to the extent the sources are subject to a trading program that qualifies for approval under §51.121(q) of this part, and the State has agreed to accept data in this format. The EPA will make both the raw data submitted in this format and summary data available to any State that chooses this option.

(i) *Definitions.* As used in this section, the following words and terms shall have the meanings set forth below:

(1) *Annual emissions.* Actual emissions for a plant, point, or process, either measured or calculated.

(2) *Ash content.* Inert residual portion of a fuel.

(3) *Area designation.* The designation of the area in which the reporting source is located with regard to the ozone NAAQS. This would include attainment or nonattainment designations. For nonattainment designations, the classification of the nonattainment area must be specified, i.e., transitional, marginal, moderate, serious, severe, or extreme.

(4) *Boiler design capacity.* A measure of the size of a boiler, based on the reported maximum continuous steam flow. Capacity is calculated in units of MMBtu/hr.

(5) *Control device type.* The name of the type of control device (e.g., wet scrubber, flaring, or process change).

(6) *Control efficiency.* The emissions reduction efficiency of a primary control device, which shows the amount of reductions of a particular pollutant from a process' emissions due to controls or material change. Control efficiency is usually expressed as a percentage or in tenths.

(7) *Day/week in operations.* Days per week that the emitting process operates.

(8) *Emission factor.* Ratio relating emissions of a specific pollutant to an activity or material throughput level.

(9) *Exit gas flow rate.* Numeric value of stack gas flow rate.

(10) *Exit gas temperature.* Numeric value of an exit gas stream temperature.

(11) *Exit gas velocity.* Numeric value of an exit gas stream velocity.

(12) *Fall throughput (%).* Portion of throughput for the 3 fall months (September, October, November). This represents the expression of annual activity information on the basis of four seasons, typically spring, summer, fall, and winter. It can be represented either as a percentage of the annual activity (e.g., production in summer is 40 percent of the year's production), or in terms of the units of the activity (e.g., out of 600 units produced, spring = 150 units, summer = 250 units, fall = 150 units, and winter = 50 units).

(13) *Federal ID code (plant).* Unique codes for a plant or facility, containing one or more pollutant-emitting sources.

(14) *Federal ID code (point).* Unique codes for the point of generation of emissions, typically a physical piece of equipment.

(15) *Federal ID code (stack number).* Unique codes for the point where emissions from one or more processes are released into the atmosphere.

(16) *Federal Information Placement System (FIPS).* The system of unique numeric codes developed by the government to identify States, counties, towns, and townships for the entire United States, Puerto Rico, and Guam.

(17) *Heat content.* The thermal heat energy content of a solid, liquid, or gaseous fuel. Fuel heat content is typically expressed in units of Btu/lb of fuel, Btu/gal of fuel, joules/kg of fuel, etc.

(18) *Hr/day in operations.* Hours per day that the emitting process operates.

(19) *Maximum design rate.* Maximum fuel use rate based on the equipment's or process' physical size or operational capabilities.

(20) *Maximum nameplate capacity.* A measure of the size of a generator which is put on the unit's nameplate by the manufacturer. The data element is reported in megawatts (MW) or kilowatts (KW).

(21) *Mobile source.* A motor vehicle, nonroad engine or nonroad vehicle, where:

(i) *Motor vehicle* means any self-propelled vehicle designed for transporting persons or property on a street or highway;

(ii) *Nonroad engine* means an internal combustion engine (including the fuel system) that is not used in a motor vehicle or a vehicle used solely for competition, or that is not subject to standards promulgated under section 111 or section 202 of the CAA;

(iii) *Nonroad vehicle* means a vehicle that is powered by a nonroad engine and that is not a motor vehicle or a vehicle used solely for competition.

(22) *Ozone season.* The period May 1 through September 30 of a year.

(23) *Physical address.* Street address of facility.

(24) *Point source.* A non-mobile source which emits 100 tons of NO_X or more per year unless the State designates as a point source a non-mobile source emitting at a specified level lower than

100 tons of NO_X per year. A non-mobile source which emits less NO_X per year than the point source threshold is an area source.

(25) *Pollutant code.* A unique code for each reported pollutant that has been assigned in the EIIP Data Model. Character names are used for criteria pollutants, while Chemical Abstracts Service (CAS) numbers are used for all other pollutants. Some States may be using storage and retrieval of aerometric data (SAROAD) codes for pollutants, but these should be able to be mapped to the EIIP Data Model pollutant codes.

(26) *Process rate/throughput.* A measurable factor or parameter that is directly or indirectly related to the emissions of an air pollution source. Depending on the type of source category, activity information may refer to the amount of fuel combusted, the amount of a raw material processed, the amount of a product that is manufactured, the amount of a material that is handled or processed, population, employment, number of units, or miles traveled. Activity information is typically the value that is multiplied against an emission factor to generate an emissions estimate.

(27) *SCC. Source category code.* A process-level code that describes the equipment or operation emitting pollutants.

(28) *Secondary control efficiency (%).* The emissions reductions efficiency of a secondary control device, which shows the amount of reductions of a particular pollutant from a process' emissions due to controls or material change. Control efficiency is usually expressed as a percentage or in tenths.

(29) *SIC.* Standard Industrial Classification code. U.S. Department of Commerce's categorization of businesses by their products or services.

(30) *Site name.* The name of the facility.

(31) *Spring throughput (%).* Portion of throughput or activity for the 3 spring months (March, April, May). See the definition of Fall Throughput.

(32) *Stack diameter.* Stack physical diameter.

(33) *Stack height.* Stack physical height above the surrounding terrain.

(34) *Start date (inventory year).* The calendar year that the emissions estimates were calculated for and are applicable to.

(35) *Start time (hour).* Start time (if available) that was applicable and used for calculations of emissions estimates.

(36) *Summer throughput (%).* Portion of throughput or activity for the 3 summer months (June, July, August). See the definition of Fall Throughput.

(37) *Summer work weekday emissions.* Average day's emissions for a typical day.

(38) *VMT by Roadway Class.* This is an expression of vehicle activity that is used with emission factors. The emission factors are usually expressed in terms of grams per mile of travel. Since VMT does not directly correlate to emissions that occur while the vehicle is not moving, these non-moving emissions are incorporated into EPA's MOBILE model emission factors.

(39) *Week/year in operation.* Weeks per year that the emitting process operates.

(40) *Work Weekday.* Any day of the week except Saturday or Sunday.

(41) *X coordinate (latitude).* East-west geographic coordinate of an object.

(42) *Y coordinate (longitude).* North-south geographic coordinate of an object.

[63 FR 57496, Oct. 27, 1998]

Subpart H—Prevention of Air Pollution Emergency Episodes

SOURCE: 51 FR 40668, Nov. 7, 1986, unless otherwise noted.

§ 51.150 Classification of regions for episode plans.

(a) This section continues the classification system for episode plans. Each region is classified separately with respect to each of the following pollutants: Sulfur oxides, particulate matter, carbon monoxide, nitrogen dioxide, and ozone.

(b) *Priority I Regions* means any area with greater ambient concentrations than the following:

(1) Sulfur dioxide—100 $\mu g/m^3$ (0.04 ppm) annual arithmetic mean; 455 $\mu g/m^3$ (0.17 ppm) 24-hour maximum.

(2) Particulate matter—95 $\mu g/m^3$ annual geometric mean; 325 $\mu g/m^3$ 24-hour maximum.

(3) Carbon monoxide—55 mg/m^3 (48 ppm) 1-hour maximum; 14 mg/m^3 (12 ppm) 8-hour maximum.

(4) Nitrogen dioxide—100 μg/m^3 (0.06 ppm) annual arithmetic mean.

(5) Ozone—195 μg/m^3 (0.10 ppm) 1-hour maximum.

(c) *Priority IA Region* means any area which is Priority I primarily because of emissions from a single point source.

(d) *Priority II Region* means any area which is not a Priority I region and has ambient concentrations between the following:

(1) Sulfur Dioxides—60–100 μg/m^3 (0.02–0.04 ppm) annual arithmetic mean; 260–445 μg/m^3 (0.10–0.17 ppm) 24-hour maximum; any concentration above 1,300 μg/m^3 (0.50 ppm) three-hour average.

(2) Particulate matter—60–95 μg/m^3 annual geometric mean; 150–325 μg/m^3 24-hour maximum.

(e) In the absence of adequate monitoring data, appropriate models must be used to classify an area under paragraph (b) of this section, consistent with the requirements contained in §51.112(a).

(f) Areas which do not meet the above criteria are classified Priority III.

[51 FR 40668, Nov. 7, 1986, as amended at 58 FR 38822, July 20, 1993]

§51.151 Significant harm levels.

Each plan for a Priority I region must include a contingency plan which must, as a mimimum, provide for taking action necessary to prevent ambient pollutant concentrations at any location in such region from reaching the following levels:

Sulfur dioxide—2.620 μg/m^3 (1.0 ppm) 24-hour average.

PM_{10}—600 micrograms/cubic meter; 24-hour average.

Carbon monoxide—57.5 mg/m^3 (50 ppm) 8-hour average; 86.3 mg/m^3 (75 ppm) 4-hour average; 144 mg/m^3 (125 ppm) 1-hour average.

Ozone—1,200 ug/m^3 (0.6 ppm) 2-hour average.

Nitrogen dioxide—3.750 ug/m^3 (2.0 ppm) 1-hour average; 938 ug/m^3 (0.5 ppm) 24-hour average.

[51 FR 40668, Nov. 7, 1986, as amended at 52 FR 24713, July 1, 1987]

§51.152 Contingency plans.

(a) Each contingency plan must—

(1) Specify two or more stages of episode criteria such as those set forth in appendix L to this part, or their equivalent;

(2) Provide for public announcement whenever any episode stage has been determined to exist; and

(3) Specify adequate emission control actions to be taken at each episode stage. (Examples of emission control actions are set forth in appendix L.)

(b) Each contingency plan for a Priority I region must provide for the following:

(1) Prompt acquisition of forecasts of atmospheric stagnation conditions and of updates of such forecasts as frequently as they are issued by the National Weather Service.

(2) Inspection of sources to ascertain compliance with applicable emission control action requirements.

(3) Communications procedures for transmitting status reports and orders as to emission control actions to be taken during an episode stage, including procedures for contact with public officials, major emission sources, public health, safety, and emergency agencies and news media.

(c) Each plan for a Priority IA and II region must include a contingency plan that meets, as a minimum, the requirements of paragraphs (b)(1) and (b)(2) of this section. Areas classified Priority III do not need to develop episode plans.

(d) Notwithstanding the requirements of paragraphs (b) and (c) of this section, the Administrator may, at his discretion—

(1) Exempt from the requirements of this section those portions of Priority I, IA, or II regions which have been designated as attainment or unclassifiable for national primary and secondary standards under section 107 of the Act; or

(2) Limit the requirements pertaining to emission control actions in Priority I regions to—

(i) Urbanized areas as identified in the most recent United States Census, and

(ii) Major emitting facilities, as defined by section 169(1) of the Act, outside the urbanized areas.

§ 51.153 Reevaluation of episode plans.

(a) States should periodically reevaluate priority classifications of all Regions or portion of Regions within their borders. The reevaluation must consider the three most recent years of air quality data. If the evaluation indicates a change to a higher priority classification, appropriate changes in the episode plan must be made as expeditiously as practicable.

(b) [Reserved]

Subpart I—Review of New Sources and Modifications

SOURCE: 51 FR 40669, Nov. 7, 1986, unless otherwise noted.

§ 51.160 Legally enforceable procedures.

(a) Each plan must set forth legally enforceable procedures that enable the State or local agency to determine whether the construction or modification of a facility, building, structure or installation, or combination of these will result in—

(1) A violation of applicable portions of the control strategy; or

(2) Interference with attainment or maintenance of a national standard in the State in which the proposed source (or modification) is located or in a neighboring State.

(b) Such procedures must include means by which the State or local agency responsible for final decision-making on an application for approval to construct or modify will prevent such construction or modification if—

(1) It will result in a violation of applicable portions of the control strategy; or

(2) It will interfere with the attainment or maintenance of a national standard.

(c) The procedures must provide for the submission, by the owner or operator of the building, facility, structure, or installation to be constructed or modified, of such information on—

(1) The nature and amounts of emissions to be emitted by it or emitted by associated mobile sources;

(2) The location, design, construction, and operation of such facility, building, structure, or installation as may be necessary to permit the State or local agency to make the determination referred to in paragraph (a) of this section.

(d) The procedures must provide that approval of any construction or modification must not affect the responsibility to the owner or operator to comply with applicable portions of the control strategy.

(e) The procedures must identify types and sizes of facilities, buildings, structures, or installations which will be subject to review under this section. The plan must discuss the basis for determining which facilities will be subject to review.

(f) The procedures must discuss the air quality data and the dispersion or other air quality modeling used to meet the requirements of this subpart.

(1) All applications of air quality modeling involved in this subpart shall be based on the applicable models, data bases, and other requirements specified in appendix W of this part (Guideline on Air Quality Models).

(2) Where an air quality model specified in appendix W of this part (Guideline on Air Quality Models) is inappropriate, the model may be modified or another model substituted. Such a modification or substitution of a model may be made on a case-by-case basis or, where appropriate, on a generic basis for a specific State program. Written approval of the Administrator must be obtained for any modification or substitution. In addition, use of a modified or substituted model must be subject to notice and opportunity for public comment under procedures set forth in § 51.102.

[51 FR 40669, Nov. 7, 1986, as amended at 58 FR 38822, July 20, 1993; 60 FR 40468, Aug. 9, 1995; 61 FR 41840, Aug. 12, 1996]

§ 51.161 Public availability of information.

(a) The legally enforceable procedures in § 51.160 must also require the State or local agency to provide opportunity for public comment on information submitted by owners and operators. The public information must include the agency's analysis of the effect of construction or modification on ambient air quality, including the

agency's proposed approval or disapproval.

(b) For purposes of paragraph (a) of this section, opportunity for public comment shall include, as a minimum—

(1) Availability for public inspection in at least one location in the area affected of the information submitted by the owner or operator and of the State or local agency's analysis of the effect on air quality;

(2) A 30-day period for submittal of public comment; and

(3) A notice by prominent advertisement in the area affected of the location of the source information and analysis specified in paragraph (b)(1) of this section.

(c) Where the 30-day comment period required in paragraph (b) of this section would conflict with existing requirements for acting on requests for permission to construct or modify, the State may submit for approval a comment period which is consistent with such existing requirements.

(d) A copy of the notice required by paragraph (b) of this section must also be sent to the Administrator through the appropriate Regional Office, and to all other State and local air pollution control agencies having jurisdiction in the region in which such new or modified installation will be located. The notice also must be sent to any other agency in the region having responsibility for implementing the procedures required under this subpart. For lead, a copy of the notice is required for all point sources. The definition of point for lead is given in §51.100(k)(2).

§51.162 Identification of responsible agency.

Each plan must identify the State or local agency which will be responsible for meeting the requirements of this subpart in each area of the State. Where such responsibility rests with an agency other than an air pollution control agency, such agency will consult with the appropriate State or local air pollution control agency in carrying out the provisions of this subpart.

§51.163 Administrative procedures.

The plan must include the administrative procedures, which will be followed in making the determination specified in paragraph (a) of §51.160.

§51.164 Stack height procedures.

Such procedures must provide that the degree of emission limitation required of any source for control of any air pollutant must not be affected by so much of any source's stack height that exceeds good engineering practice or by any other dispersion technique, except as provided in §51.118(b). Such procedures must provide that before a State issues a permit to a source based on a good engineering practice stack height that exceeds the height allowed by §51.100(ii) (1) or (2), the State must notify the public of the availability of the demonstration study and must provide opportunity for public hearing on it. This section does not require such procedures to restrict in any manner the actual stack height of any source.

§51.165 Permit requirements.

(a) State Implementation Plan provisions satisfying sections 172(b)(6) and 173 of the Act shall meet the following conditions:

(1) All such plans shall use the specific definitions. Deviations from the following wording will be approved only if the State specifically demonstrates that the submitted definition is more stringent, or at least as stringent, in all respects as the corresponding definition below:

(i) *Stationary source* means any building, structure, facility, or installation which emits or may emit any air pollutant subject to regulation under the Act.

(ii) *Building, structure, facility, or installation* means all of the pollutant-emitting activities which belong to the same industrial grouping, are located on one or more contiguous or adjacent properties, and are under the control of the same person (or persons under common control) except the activities of any vessel. Pollutant-emitting activities shall be considered as part of the same industrial grouping if they belong to the same *Major Group* (i.e., which have the same two-digit code) as described in the *Standard Industrial Classification Manual, 1972,* as amended by the 1977 Supplement (U.S. Government

Printing Office stock numbers 4101–0065 and 003–005–00176–0, respectively).

(iii) *Potential to emit* means the maximum capacity of a stationary source to emit a pollutant under its physical and operational design. Any physical or operational limitation on the capacity of the source to emit a pollutant, including air pollution control equipment and restrictions on hours of operation or on the type or amount of material combusted, stored, or processed, shall be treated as part of its design only if the limitation or the effect it would have on emissions is federally enforceable. Secondary emissions do not count in determining the potential to emit of a stationary source.

(iv)(A) *Major stationary source* means:

(*1*) Any stationary source of air pollutants which emits, or has the potential to emit 100 tons per year or more of any pollutant subject to regulation under the Act, or

(*2*) Any physical change that would occur at a stationary source not qualifying under paragraph (a)(1)(iv)(A)(*1*) as a major stationary source, if the change would constitute a major stationary source by itself.

(B) A major stationary source that is major for volatile organic compounds shall be considered major for ozone

(C) The fugitive emissions of a stationary source shall not be included in determining for any of the purposes of this paragraph whether it is a major stationary source, unless the source belongs to one of the following categories of stationary sources:

(*1*) Coal cleaning plants (with thermal dryers);

(*2*) Kraft pulp mills;

(*3*) Portland cement plants;

(*4*) Primary zinc smelters;

(*5*) Iron and steel mills;

(*6*) Primary aluminum ore reduction plants;

(*7*) Primary copper smelters;

(*8*) Municipal incinerators capable of charging more than 250 tons of refuse per day;

(*9*) Hydrofluoric, sulfuric, or nitric acid plants;

(*10*) Petroleum refineries;

(*11*) Lime plants;

(*12*) Phosphate rock processing plants;

(*13*) Coke oven batteries;

(*14*) Sulfur recovery plants;

(*15*) Carbon black plants (furnace process);

(*16*) Primary lead smelters;

(*17*) Fuel conversion plants;

(*18*) Sintering plants;

(*19*) Secondary metal production plants;

(*20*) Chemical process plants;

(*21*) Fossil-fuel boilers (or combination thereof) totaling more than 250 million British thermal units per hour heat input;

(*22*) Petroleum storage and transfer units with a total storage capacity exceeding 300,000 barrels;

(*23*) Taconite ore processing plants;

(*24*) Glass fiber processing plants;

(*25*) Charcoal production plants;

(*26*) Fossil fuel-fired steam electric plants of more than 250 million British thermal units per hour heat input; and

(*27*) Any other stationary source category which, as of August 7, 1980, is being regulated under section 111 or 112 of the Act.

(v)(A) *Major modification* means any physical change in or change in the method of operation of a major stationary source that would result in a significant net emissions increase of any pollutant subject to regulation under the Act.

(B) Any net emissions increase that is considered significant for volatile organic compounds shall be considered significant for ozone.

(C) A physical change or change in the method of operation shall not include:

(*1*) Routine maintenance, repair and replacement;

(*2*) Use of an alternative fuel or raw material by reason of an order under sections 2 (a) and (b) of the Energy Supply and Environmental Coordination Act of 1974 (or any superseding legislation) or by reason of a natural gas curtailment plan pursuant to the Federal Power Act;

(*3*) Use of an alternative fuel by reason of an order or rule section 125 of the Act;

(*4*) Use of an alternative fuel at a steam generating unit to the extent that the fuel is generated from municipal solid waste;

(*5*) Use of an alternative fuel or raw material by a stationary source which;

(*i*) The source was capable of accommodating before December 21, 1976, unless such change would be prohibited under any federally enforceable permit condition which was established after December 12, 1976 pursuant to 40 CFR 52.21 or under regulations approved pursuant to 40 CFR subpart I or §51.166, or

(*ii*) The source is approved to use under any permit issued under regulations approved pursuant to this section;

(*6*) An increase in the hours of operation or in the production rate, unless such change is prohibited under any federally enforceable permit condition which was established after December 21, 1976 pursuant to 40 CFR 52.21 or regulations approved pursuant to 40 CFR part 51 subpart I or 40 CFR 51.166.

(*7*) Any change in ownership at a stationary source.

(*8*) The addition, replacement or use of a pollution control project at an existing electric utility steam generating unit, unless the reviewing authority determines that such addition, replacement, or use renders the unit less environmentally beneficial, or except:

(*i*) When the reviewing authority has reason to believe that the pollution control project would result in a significant net increase in representative actual annual emissions of any criteria pollutant over levels used for that source in the most recent air quality impact analysis in the area conducted for the purpose of title I, if any, and

(*ii*) The reviewing authority determines that the increase will cause or contribute to a violation of any national ambient air quality standard or PSD increment, or visibility limitation.

(*9*) The installation, operation, cessation, or removal of a temporary clean coal technology demonstration project, provided that the project complies with:

(*i*) The State Implementation Plan for the State in which the project is located, and

(*ii*) Other requirements necessary to attain and maintain the national ambient air quality standard during the project and after it is terminated.

(vi)(A) *Net emissions increase* means the amount by which the sum of the following exceeds zero:

(*1*) Any increase in actual emissions from a particular physical change or change in the method of operation at a stationary source; and

(*2*) Any other increases and decreases in actual emissions at the source that are contemporaneous with the particular change and are otherwise creditable.

(B) An increase or decrease in actual emissions is contemporaneous with the increase from the particular change only if it occurs before the date that the increase from the particular change occurs;

(C) An increase or decrease in actual emissions is creditable only if:

(*1*) It occurs within a reasonable period to be specified by the reviewing authority; and

(*2*) The reviewing authority has not relied on it in issuing a permit for the source under regulations approved pursuant to this section which permit is in effect when the increase in actual emissions from the particular change occurs.

(D) An increase in actual emissions is creditable only to the extent that the new level of actual emissions exceeds the old level.

(E) A decrease in actual emissions is creditable only to the extent that:

(*1*) The old level of actual emission or the old level of allowable emissions whichever is lower, exceeds the new level of actual emissions;

(*2*) It is federally enforceable at and after the time that actual construction on the particular change begins; and

(*3*) The reviewing authority has not relied on it in issuing any permit under regulations approved pursuant to 40 CFR part 51 subpart I or the State has not relied on it in demonstrating attainment or reasonable further progress;

(*4*) It has approximately the same qualitative significance for public health and welfare as that attributed to the increase from the particular change.

(F) An increase that results from a physical change at a source occurs

when the emissions unit on which construction occurred becomes operational and begins to emit a particular pollutant. Any replacement unit that requires shakedown becomes operational only after a reasonable shakedown period, not to exceed 180 days.

(vii) *Emissions unit* means any part of a stationary source which emits or would have the potential to emit any pollutant subject to regulation under the the Act.

(viii) *Secondary emissons* means emissions which would occur as a result of the construction or operation of a major stationary source or major modification, but do not come from the major stationary source or major modification itself. For the purpose of this section, secondary emissions must be specific, well defined, quantifiable, and impact the same general area as the stationary source or modification which causes the secondary emissions. Secondary emissions include emissions from any offsite support facility which would not be constructed or increase its emissions except as a result of the construction of operation of the major stationary source of major modification. Secondary emissions do not include any emissions which come directly from a mobile source such as emissions from the tailpipe of a motor vehicle, from a train, or from a vessel.

(ix) *Fugitive emissions* means those emissions which could not reasonably pass through a stack, chimney, vent or other functionally equivalent opening.

(x) *Significant* means, in reference to a net emissions increase pr the potential of a source to emit any of the following pollutions, as rate of emissions that would equal or exceed any of the following rates:

POLLUTANT	EMISSION RATE
Carbon monoxide	100 tons per year (tpy)
Nitrogen oxides	40 tpy
Sulfur dioxide	40 tpy
Ozone	40 tpy of volatile organic compounds
Lead	0.6 tpy

(xi) *Allowable emissions* means the emissions rate of a stationary source calculated using the maximum rated capacity of the source (unless the source is subject to federally enforceable limits which restrict the operating rate, or hours of operation, or both) and the most stringent of the following:

(A) The applicable standards set forth in 40 CFR part 60 or 61;

(B) Any applicable State Implementation Plan emissions limitation including those with a future compliance date; or

(C) The emissions rate specified as a federally enforceable permit condition, including those with a future compliance date.

(xii)(A) *Actual emissions* means the actual rate of emissions of a pollutant from an emissions unit as determined in accordance with paragraphs (a)(1)(xii) (B) through (D) of this section.

(B) In general, actual emissions as of a particular date shall equal the average rate, in tons per year, at which the unit actually emitted the pollutant during a two-year period which precedes the particular date and which is representative of normal source operation. The reviewing authority shall allow the use of a different time period upon a determination that it is more representative of normal source operation. Actual emissions shall be calculated using the unit's actual operating hours, production rates, and types of materials processed, stored, or combusted during the selected time period.

(C) The reviewing authority may presume that the source-specific allowable emissions for the unit are equivalent to the actual emissions of the unit.

(D) For any emissions unit (other than an electric utility steam generating unit specified in paragraph (a)(1)(xii)(E) of this section) which has not begun normal operations on the particular date, actual emissions shall equal the potential to emit of the unit on that date.

(E) For an electric utility steam generating unit (other than a new unit or the replacement of an existing unit) actual emissions of the unit following the physical or operational change shall equal the representative actual annual emissions of the unit, provided the source owner or operator maintains and submits to the reviewing authority, on an annual basis for a period of 5 years from the date the unit resumes

regular operation, information demonstrating that the physical or operational change did not result in an emissions increase. A longer period, not to exceed 10 years, may be required by the reviewing authority if it determines such a period to be more representative of normal source post-change operations.

(xiii) *Lowest achievable emission rate* means, for any source, the more stringent rate of emissions based on the following:

(A) The most stringent emissions limitation which is contained in the implementation plan of any State for such class or category of stationary source, unless the owner or operator of the proposed stationary source demonstrates that such limitations are not achievable; or

(B) The most stringent emissions limitation which is achieved in practice by such class or category of stationary sources. This limitation, when applied to a modification, means the lowest achievable emissions rate for the new or modified emissions units within or stationary source. In no event shall the application of the term permit a proposed new or modified stationary source to emit any pollutant in excess of the amount allowable under an applicable new source standard of performance.

(xiv) *Federally enforceable* means all limitations and conditions which are enforceable by the Administrator, including those requirements developed pursuant to 40 CFR parts 60 and 61, requirements within any applicable State implementation plan, any permit requirements established pursuant to 40 CFR 52.21 or under regulations approved pursuant to 40 CFR part 51, subpart I, including operating permits issued under an EPA-approved program that is incorporated into the State implementation plan and expressly requires adherence to any permit issued under such program.

(xv) *Begin actual construction* means in general, initiation of physical on-site construction activities on an emissions unit which are of a permanent nature. Such activities include, but are not limited to, installation of building supports and foundations, laying of underground pipework, and construction of permanent storage structures. With respect to a change in method of operating this term refers to those on-site activities other than preparatory activities which mark the initiation of the change.

(xvi) *Commence* as applied to construction of a major stationary source or major modification means that the owner or operator has all necessary preconstruction approvals or permits and either has:

(A) Begun, or caused to begin, a continuous program of actual on-site construction of the source, to be completed within a reasonable time; or

(B) Entered into binding agreements or contractual obligations, which cannot be canceled or modified without substantial loss to the owner or operator, to undertake a program of actual construction of the source to be completed within a reasonable time.

(xvii) *Necessary preconstruction approvals or permits* means those Federal air quality control laws and regulations and those air quality control laws and regulations which are part of the applicable State Implementation Plan.

(xviii) *Construction* means any physical change or change in the method of operation (including fabrication, erection, installation, demolition, or modification of an emissions unit) which would result in a change in actual emissions.

(xix)*Volatile organic compounds (VOC)* is as defined in §51.100(s) of this part.

(xx) *Electric utility steam generating unit* means any steam electric generating unit that is constructed for the purpose of supplying more than one-third of its potential electric output capacity and more than 25 MW electrical output to any utility power distribution system for sale. Any steam supplied to a steam distribution system for the purpose of providing steam to a steam-electric generator that would produce electrical energy for sale is also considered in determining the electrical energy output capacity of the affected facility.

(xxi) *Representative actual annual emissions* means the average rate, in tons per year, at which the source is projected to emit a pollutant for the two-year period after a physical change or change in the method of operation of

a unit, (or a different consecutive two-year period within 10 years after that change, where the reviewing authority determines that such period is more representative of source operations), considering the effect any such change will have on increasing or decreasing the hourly emissions rate and on projected capacity utilization. In projecting future emissions the reviewing authority shall:

(A) Consider all relevant information, including but not limited to, historical operational data, the company's own representations, filings with the State or Federal regulatory authorities, and compliance plans under title IV of the Clean Air Act; and

(B) Exclude, in calculating any increase in emissions that results from the particular physical change or change in the method of operation at an electric utility steam generating unit, that portion of the unit's emissions following the change that could have been accommodated during the representative baseline period and is attributable to an increase in projected capacity utilization at the unit that is unrelated to the particular change, including any increased utilization due to the rate of electricity demand growth for the utility system as a whole.

(xxii) *Temporary clean coal technology demonstration project* means a clean coal technology demonstration project that is operated for a period of 5 years or less, and which complies with the State Implementation Plan for the State in which the project is located and other requirements necessary to attain and maintain the national ambient air quality standards during the project and after it is terminated.

(xxiii) *Clean coal technology* means any technology, including technologies applied at the precombustion, combustion, or post combustion stage, at a new or existing facility which will achieve significant reductions in air emissions of sulfur dioxide or oxides of nitrogen associated with the utilization of coal in the generation of electricity, or process steam which was not in widespread use as of November 15, 1990.

(xxiv) *Clean coal technology demonstration project* means a project using funds appropriated under the heading ''Department of Energy-Clean Coal Technology,'' up to a total amount of $2,500,000,000 for commercial demonstration of clean coal technology, or similar projects funded through appropriations for the Environmental Protection Agency. The Federal contribution for a qualifying project shall be at least 20 percent of the total cost of the demonstration project.

(xxv) *Pollution control project* means any activity or project at an existing electric utility steam generating unit for purposes of reducing emissions from such unit. Such activities or projects are limited to:

(A) The installation of conventional or innovative pollution control technology, including but not limited to advanced flue gas desulfurization, sorbent injection for sulfur dioxide and nitrogen oxides controls and electrostatic precipitators;

(B) An activity or project to accommodate switching to a fuel which is less polluting than the fuel used prior to the activity or project, including, but not limited to natural gas or coal reburning, or the cofiring of natural gas and other fuels for the purpose of controlling emissions;

(C) A permanent clean coal technology demonstration project conducted under title II, sec. 101(d) of the Further Continuing Appropriations Act of 1985 (sec. 5903(d) of title 42 of the United States Code), or subsequent appropriations, up to a total amount of $2,500,000,000 for commercial demonstration of clean coal technology, or similar projects funded through appropriations for the Environmental Protection Agency; or

(D) A permanent clean coal technology demonstration project that constitutes a repowering project.

(2) Each plan shall adopt a preconstruction review program to satisfy the requirements of sections 172(b)(6) and 173 of the Act for any area designated nonattainment for any national ambient air quality standard under 40 CFR 81.300 *et seq.* Such a program shall apply to any new major stationary source or major modification that is major for the pollutant for

which the area is designated nonattainment, if the stationary source or modification would locate anywhere in the designated nonattainment area.

(3)(i) Each plan shall provide that for sources and modifications subject to any preconstruction review program adopted pursuant to this subsection the baseline for determining credit for emissions reductions is the emissions limit under the applicable State Implementation Plan in effect at the time the application to construct is filed, except that the offset baseline shall be the actual emissions of the source from which offset credit is obtained where;

(A) The demonstration of reasonable further progress and attainment of ambient air quality standards is based upon the actual emissions of sources located within a designated nonattainment area for which the preconstruction review program was adopted; or

(B) The applicable State Implementation Plan does not contain an emissions limitation for that source or source category.

(ii) The plan shall further provide that:

(A) Where the emissions limit under the applicable State Implementation Plan allows greater emissions than the potential to emit of the source, emissions offset credit will be allowed only for control below this potential;

(B) For an existing fuel combustion source, credit shall be based on the allowable emissions under the applicable State Implementation Plan for the type of fuel being burned at the time the application to construct is filed. If the existing source commits to switch to a cleaner fuel at some future date, emissions offset credit based on the allowable (or actual) emissions for the fuels involved is not acceptable, unless the permit is conditioned to require the use of a specified alternative control measure which would achieve the same degree of emissions reduction should the source switch back to a dirtier fuel at some later date. The reviewing authority should ensure that adequate long-term supplies of the new fuel are available before granting emissions offset credit for fuel switches,

(C)(*1*) Emissions reductions achieved by shutting down an existing source or curtailing production or operating hours below baseline levels may be generally credited if such reductions are permanent, quantifiable, and federally enforceable, and if the area has an EPA-approved attainment plan. In addition, the shutdown or curtailment is creditable only if it occurred on or after the date specified for this purpose in the plan, and if such date is on or after the date of the most recent emissions inventory used in the plan's demonstration of attainment. Where the plan does not specify a cutoff date for shutdown credits, the date of the most recent emissions inventory or attainment demonstration, as the case may be, shall apply. However, in no event may credit be given for shutdowns which occurred prior to August 7, 1977. For purposes of this paragraph, a permitting authority may choose to consider a prior shutdown or curtailment to have occurred after the date of its most recent emissions inventory, if the inventory explicitly includes as current *existing* emissions the emissions from such previously shutdown or curtailed sources.

(*2*) Such reductions may be credited in the absence of an approved attainment demonstration only if the shutdown or curtailment occurred on or after the date the new source permit application is filed, or, if the applicant can establish that the proposed new source is a replacement for the shutdown or curtailed source, and the cutoff date provisions of §51.165(a)(3)(ii)(C)(*1*) are observed.

(D) No emissions credit may be allowed for replacing one hydrocarbon compound with another of lesser reactivity, except for those compounds listed in Table 1 of EPA's ''Recommended Policy on Control of Volatile Organic Compounds'' (42 FR 35314, July 8, 1977; (This document is also available from Mr. Ted Creekmore, Office of Air Quality Planning and Standards, (MD–15) Research Triangle Park, NC 27711.))

(E) All emission reductions claimed as offset credit shall be federally enforceable;

(F) Procedures relating to the permissible location of offsetting emissions shall be followed which are at least as stringent as those set out in 40 CFR part 51 appendix S section IV.D.

(G) Credit for an emissions reduction can be claimed to the extent that the reviewing authority has not relied on it in issuing any permit under regulations approved pursuant to 40 CFR part 51 subpart I or the State has not relied on it in demonstration attainment or reasonable further progress.

(4) Each plan may provide that the provisions of this paragraph do not apply to a source or modification that would be a major stationary source or major modification only if fugitive emission to the extent quantifiable are considered in calculating the potential to emit of the stationary source or modification and the source does not belong to any of the following categories:

(i) Coal cleaning plants (with thermal dryers);

(ii) Kraft pulp mills;

(iii) Portland cement plants;

(iv) Primary zinc smelters;

(v) Iron and steel mills;

(vi) Primary aluminum ore reduction plants;

(vii) Primary copper smelters;

(viii) Municipal incinerators capable of charging more than 250 tons of refuse per day;

(ix) Hydrofluoric, sulfuric, or citric acid plants;

(x) Petroleum refineries;

(xi) Lime plants;

(xii) Phosphate rock processing plants;

(xiii) Coke oven batteries;

(xiv) Sulfur recovery plants;

(xv) Carbon black plants (furnace process);

(xvi) Primary lead smelters;

(xvii) Fuel conversion plants;

(xviii) Sintering plants;

(xix) Secondary metal production plants;

(xx) Chemical process plants;

(xxi) Fossil-fuel boilers (or combination thereof) totaling more than 250 million British thermal units per hour heat input;

(xxii) Petroleum storage and transfer units with a total storage capacity exceeding 300,000 barrels;

(xxiii) Taconite ore processing plants;

(xxiv) Glass fiber processing plants;

(xxv) Charcoal production plants;

(xxvi) Fossil fuel-fired steam electric plants of more than 250 million British thermal units per hour heat input;

(xxvii) Any other stationary source category which, as of August 7, 1980, is being regulated under section 111 or 112 of the Act.

(5) Each plan shall include enforceable procedures to provide that:

(i) Approval to construct shall not relieve any owner or operator of the responsibility to comply fully with applicable provision of the plan and any other requirements under local, State or Federal law.

(ii) At such time that a particular source or modification becomes a major stationary source or major modification solely by virtue of a relaxation in any enforcement limitation which was established after August 7, 1980, on the capacity of the source or modification otherwise to emit a pollutant, such as a restriction on hours of operation, then the requirements of regulations approved pursuant to this section shall apply to the source or modification as though construction had not yet commenced on the source or modification;

(b)(1) Each plan shall include a preconstruction review permit program or its equivalent to satisfy the requirements of section 110(a)(2)(D)(i) of the Act for any new major stationary source or major modification as defined in paragraphs (a)(1) (iv) and (v) of this section. Such a program shall apply to any such source or modification that would locate in any area designated as attainment or unclassifiable for any national ambient air quality standard pursuant to section 107 of the Act, when it would cause or contribute to a violation of any national ambient air quality standard.

(2) A major source or major modification will be considered to cause or contribute to a violation of a national ambient air quality standard when such source or modification would, at a minimum, exceed the following significance levels at any locality that does not or would not meet the applicable national standard:

Pollutant	Annual	Averaging time (hours)			
		24	8	3	1
SO_2	1.0 μg/m³	5 μg/m³		25 μg/m³	
PM_{10}	1.0 μg/m³	5 μg/m³			
NO_2	1.0 μg/m³				
CO			0.5 mg/m³		2 mg/m³

(3) Such a program may include a provision which allows a proposed major source or major modification subject to paragraph (b) of this section to reduce the impact of its emissions upon air quality by obtaining sufficient emission reductions to, at a minimum, compensate for its adverse ambient impact where the major source or major modification would otherwise cause or contribute to a violation of any national ambient air quality standard. The plan shall require that, in the absence of such emission reductions, the State or local agency shall deny the proposed construction.

(4) The requirements of paragraph (b) of this section shall not apply to a major stationary source or major modification with respect to a particular pollutant if the owner or operator demonstrates that, as to that pollutant, the source or modification is located in an area designated as nonattainment pursuant to section 107 of the Act.

[51 FR 40669, Nov. 7, 1986, as amended at 52 FR 24713, July 1, 1987; 52 FR 29386, Aug 7, 1987; 54 FR 27285, 27299 June 28, 1989; 57 FR 3946, Feb. 3, 1992; 57 FR 32334, July 21, 1992]

§51.166 Prevention of significant deterioration of air quality.

(a)(1) *Plan requirements.* In accordance with the policy of section 101(b)(1) of the act and the purposes of section 160 of the Act, each applicable State implementation plan shall contain emission limitations and such other measures as may be necessary to prevent significant deterioration of air quality.

(2) *Plan revisions.* If a State Implementation Plan revision would result in increased air quality deterioration over any baseline concentration, the plan revision shall include a demonstration that it will not cause or contribute to a violation of the applicable increment(s). If a plan revision proposing less restrictive requirements was submitted after August 7, 1977 but on or before any applicable baseline date and was pending action by the Administrator on that date, no such demonstration is necessary with respect to the area for which a baseline date would be established before final action is taken on the plan revision. Instead, the assessment described in paragraph (a)(4) of this section, shall review the expected impact to the applicable increment(s).

(3) *Required plan revision.* If the State or the Administrator determines that a plan is substantially inadequate to prevent significant deterioration or that an applicable increment is being violated, the plan shall be revised to correct the inadequacy or the violation. The plan shall be revised within 60 days of such a finding by a State or within 60 days following notification by the Administrator, or by such later date as prescribed by the Administrator after consultation with the State.

(4) *Plan assessment.* The State shall review the adequacy of a plan on a periodic basis and within 60 days of such time as information becomes available that an applicable increment is being violated.

(5) *Public participation.* Any State action taken under this paragraph shall be subject to the opportunity for public hearing in accordance with procedures equivalent to those established in §51.102.

(6) *Amendments.* (i) Any State required to revise its implementation plan by reason of an amendment to this section, including any amendment adopted simultaneously with this paragraph, shall adopt and submit such plan revision to the Administrator for approval within 9 months after the effective date of the new amendments.

(ii) Any revision to an implementation plan that would amend the provisions for the prevention of significant air quality deterioration in the plan shall specify when and as to what

sources and modifications the revision is to take effect.

(iii) Any revision to an implementation plan that an amendment to this section required shall take effect no later than the date of its approval and may operate prospectively.

(b) *Definitions.* All State plans shall use the following definitions for the purposes of this section. Deviations from the following wording will be approved only if the State specifically demonstrates that the submitted definition is more stringent, or at least as stringent, in all respects as the corresponding definitions below:

(1)(i) *Major stationary source* means:

(*a*) Any of the following stationary sources of air pollutants which emits, or has the potential to emit, 100 tons per year or more of any pollutant subject to regulation under the Act: Fossil fuel-fired steam electric plants of more than 250 million British thermal units per hour heat input, coal cleaning plants (with thermal dryers), kraft pulp mills, portland cement plants, primary zinc smelters, iron and steel mill plants, primary aluminum ore reduction plants, primary copper smelters, municipal incinerators capable of charging more than 250 tons of refuse per day, hydrofluoric, sulfuric, and nitric acid plants, petroleum refineries, lime plants, phosphate rock processing plants, coke oven batteries, sulfur recovery plants, carbon black plants (furnace process), primary lead smelters, fuel conversion plants, sintering plants, secondary metal production plants, chemical process plants, fossil fuel boilers (or combinations thereof) totaling more than 250 million British thermal units per hour heat input, petroleum storage and transfer units with a total storage capacity exceeding 300,000 barrels, taconite ore processing plants, glass fiber processing plants, and charcoal production plants;

(*b*) Notwithstanding the stationary source size specified in paragraph (b)(1)(i)(*a*) of this section, any stationary source which emits, or has the potential to emit, 250 tons per year or more of any air pollutant subject to regulation under the Act; or

(*c*) Any physical change that would occur at a stationary source not otherwise qualifying under paragraph (b)(1) of this section, as a major stationary source if the change would constitute a major stationary source by itself.

(ii) A major source that is major for volatile organic compounds shall be considered major for ozone.

(iii) The fugitive emissions of a stationary source shall not be included in determining for any of the purposes of this section whether it is a major stationary source, unless the source belongs to one of the following categories of stationary sources:

(*a*) Coal cleaning plants (with thermal dryers);

(*b*) Kraft pulp mills;

(*c*) Portland cement plants;

(*d*) Primary zinc smelters;

(*e*) Iron and steel mills;

(*f*) Primary aluminum ore reduction plants;

(*g*) Primary copper smelters;

(*h*) Municipal incinerators capable of charging more than 250 tons of refuse per day;

(*i*) Hydrofluoric, sulfuric, or nitric acid plants;

(*j*) Petroleum refineries;

(*k*) Lime plants;

(*l*) Phosphate rock processing plants;

(*m*) Coke oven batteries;

(*n*) Sulfur recovery plants;

(*o*) Carbon black plants (furnace process);

(*p*) Primary lead smelters;

(*q*) Fuel conversion plants;

(*r*) Sintering plants;

(*s*) Secondary metal production plants;

(*t*) Chemical process plants;

(*u*) Fossil-fuel boilers (or combination thereof) totaling more than 250 million British thermal units per hour heat input;

(*v*) Petroleum storage and transfer units with a total storage capacity exceeding 300,000 barrels;

(*w*) Taconite ore processing plants;

(*x*) Glass fiber processing plants;

(*y*) Charcoal production plants;

(*z*) Fossil fuel-fired steam electric plants of more that 250 million British thermal units per hour heat input;

(*aa*) Any other stationary source category which, as of August 7, 1980, is being regulated under section 111 or 112 of the Act.

(2)(i) *Major modification* means any physical change in or change in the

method of operation of a major stationary source that would result in a significant net emissions increase of any pollutant subject to regulation under the Act.

(ii) Any net emissions increase that is significant for volatile organic compounds shall be considered significant for ozone.

(iii) A physical change or change in the method of operation shall not include:

(*a*) Routine maintenance, repair, and replacement;

(*b*) Use of an alternative fuel or raw material by reason of any order under section 2 (a) and (b) of the Energy Supply and Environmental Coordination Act of 1974 (or any superseding legislation) or by reason of a natural gas curtailment plan pursuant to the Federal Power Act;

(*c*) Use of an alternative fuel by reason of an order or rule under section 125 of the Act;

(*d*) Use of an alternative fuel at a steam generating unit to the extent that the fuel is generated from municipal solid waste;

(*e*) Use of an alternative fuel or raw material by a stationary source which:

(*1*) The source was capable of accommodating before January 6, 1975, unless such change would be prohibited under any federally enforceable permit condition which was established after January 6, 1975 pursuant to 40 CFR 52.21 or under regulations approved pursuant to 40 CFR subpart I or §51.166; or

(*2*) The source is approved to use under any permit issued under 40 CFR 52.21 or under regulations approved pursuant to 40 CFR 51.166;

(*f*) An increase in the hours of operation or in the production rate, unless such change would be prohibited under any federally enforceable permit condition which was established after January 6, 1975, pursuant to 40 CFR 52.21 or under regulations approved pursuant to 40 CFR subpart I or §51.166.

(*g*) Any change in ownership at a stationary source.

(*h*) The addition, replacement or use of a pollution control project at an existing electric utility steam generating unit, unless the Administrator determines that such addition, replacement, or use renders the unit less environmentally beneficial, or except:

(*1*) When the reviewing authority has reason to believe that the pollution control project would result in a significant net increase in representative actual annual emissions of any criteria pollutant over levels used for that source in the most recent air quality impact analysis in the area conducted for the purpose of title I, if any, and

(*2*) The reviewing authority determines that the increase will cause or contribute to a violation of any national ambient air quality standard or PSD increment, or visibility limitation.

(*i*) The installation, operation, cessation, or removal of a temporary clean coal technology demonstration project, provided that the project complies with:

(*1*) The State implementation plan for the State in which the project is located; and

(*2*) Other requirements necessary to attain and maintain the national ambient air quality standards during the project and after it is terminated.

(*j*) The installation or operation of a permanent clean coal technology demonstration project that constitutes repowering, provided that the project does not result in an increase in the potential to emit of any regulated pollutant emitted by the unit. This exemption shall apply on a pollutant-by-pollutant basis.

(*k*) The reactivation of a very clean coal-fired electric utility steam generating unit.

(3)(i) *Net emissions increase* means the amount by which the sum of the following exceeds zero:

(*a*) Any increase in actual emissions from a particular physical change or change in the method of operation at a stationary source; and

(*b*) Any other increases and decreases in actual emissions at the source that are contemporaneous with the particular change and are otherwise creditable.

(ii) An increase or decrease in actual emissions is contemporaneous with the increase from the particular change only if it occurs within a reasonable

period (to be specified by the State) before the date that the increase from the particular change occurs.

(iii) An increase or decrease in actual emissions is creditable only if the reviewing authority has not relied on it in issuing a permit for the source under regulations approved pursuant to this section, which permit is in effect when the increase in actual emissions from the particular change occurs.

(iv) An increase or decrease in actual emissions of sulfur dioxide, particulate matter, or nitrogen oxides, which occurs before the applicable minor source baseline date is creditable only if it is required to be considered in calculating the amount of maximum allowable increases remaining available. With respect to particulate matter, only PM–10 emissions can be used to evaluate the net emissions increase for PM–10.

(v) An increase in actual emissions is creditable only to the extent that the new level of actual emissions exceeds the old level.

(vi) A decrease in actual emissions is creditable only to the extent that:

(*a*) The old level of actual emissions or the old level of allowable emissions, whichever is lower, exceeds the new level of actual emissions;

(*b*) It is federally enforceable at and after the time that actual construction on the particular change begins; and

(*c*) It has approximately the same qualitative significance for public health and welfare as that attributed to the increase from the particular change.

(vii) An increase that results from a physical change at a source occurs when the emissions unit on which construction occurred becomes operational and begins to emit a particular pollutant. Any replacement unit that requires shakedown becomes operational only after a reasonable shakedown period, not to exceed 180 days.

(4) *Potential to emit* means the maximum capacity of a stationary source to emit a pollutant under its physical and operational design. Any physical or operational limitation on the capacity of the source to emit a pollutant, including air pollution control equipment and restrictions on hours of operation or on the type or amount of material combusted, stored, or processed, shall be treated as part of its design if the limitation or the effect it would have on emissions is federally enforceable. Secondary emissions do not count in determining the potential to emit of a stationary source.

(5) *Stationary source* means any building, structure, facility, or installation which emits or may emit any air pollutant subject to regulation under the Act.

(6) *Building, structure, facility, or installation* means all of the pollutant-emitting activities which belong to the same industrial grouping, are located on one or more contiguous or adjacent properties, and are under the control of the same person (or persons under common control) except the activities of any vessel. Pollutant-emitting activities shall be considered as part of the same industrial grouping if they belong to the same *Major Group* (i.e., which have the same two-digit code) as described in the *Standard Industrial Classification Manual, 1972,* as amended by the 1977 Supplement (U.S. Government Printing Office stock numbers 4101–0066 and 003–005–00176–0, respectively).

(7) *Emissions unit* means any part of a stationary source which emits or would have the potential to emit any pollutant subject to regulation under the Act.

(8) *Construction* means any physical change or change in the method of operation (including fabrication, erection, installation, demolition, or modification of an emissions unit) which would result in a change in actual emissions.

(9) *Commence* as applied to construction of a major stationary source or major modification means that the owner or operator has all necessary preconstruction approvals or permits and either has:

(i) Begun, or caused to begin, a continuous program of actual on-site construction of the source, to be completed within a reasonable time; or

(ii) Entered into binding agreements or contractual obligations, which cannot be cancelled or modified without substantial loss to the owner or operator, to undertake a program of actual construction of the source to be completed within a reasonable time.

(10) *Necessary preconstruction approvals or permits* means those permits or approvals required under Federal air quality control laws and regulations and those air quality control laws and regulations which are part of the applicable State Implementation Plan.

(11) *Begin actual construction* means, in general, initiation of physical on-site construction activities on an emissions unit which are of a permanent nature. Such activities include, but are not limited to, installation of building supports and foundations, laying of underground pipework, and construction of permanent storage structures. With respect to a change in method of operation this term refers to those on-site activities, other than preparatory activities, which mark the initiation of the change.

(12) *Best available control technology* means an emissions limitation (including a visible emissions standard) based on the maximum degree of reduction for each pollutant subject to regulation under the Act which would be emitted from any proposed major stationary source or major modification which the reviewing authority, on a case-by-case basis, taking into account energy, environmental, and economic impacts and other costs, determines is achievable for such source or modification through application of production processes or available methods, systems, and techniques, including fuel cleaning or treatment or innovative fuel combination techniques for control of such pollutant. In no event shall application of best available control technology result in emissions of any pollutant which would exceed the emissions allowed by any applicable standard under 40 CFR parts 60 and 61. If the reviewing authority determines that technological or economic limitations on the application of measurement methodology to a particular emissions unit would make the imposition of an emissions standard infeasible, a design, equipment, work practice, operational standard or combination thereof, may be prescribed instead to satisfy the requirement for the application of best available control technology. Such standard shall, to the degree possible, set forth the emissions reduction achievable by implementation of such design, equipment, work practice or operation, and shall provide for compliance by means which achieve equivalent results.

(13)(i) *Baseline concentration* means that ambient concentration level which exists in the baseline area at the time of the applicable minor source baseline date. A baseline concentration is determined for each pollutant for which a minor source baseline date is established and shall include:

(*a*) The actual emissions representative of sources in existence on the applicable minor source baseline date, except as provided in paragraph (b)(13)(ii) of this section;

(*b*) The allowable emissions of major stationary sources which commenced construction before the major source baseline date, but were not in operation by the applicable minor source baseline date.

(ii) The following will not be included in the baseline concentration and will affect the applicable maximum allowable increase(s):

(*a*) Actual emissions from any major stationary source on which construction commenced after the major source baseline date; and

(*b*) Actual emissions increases and decreases at any stationary source occurring after the minor source baseline date.

(14)(i) *Major source baseline date* means:

(*a*) In the case of particulate matter and sulfur dioxide, January 6, 1975, and

(*b*) In the case of nitrogen dioxide, February 8, 1988.

(ii) *Minor source baseline date* means the earliest date after the trigger date on which a major stationary source or a major modification subject to 40 CFR 52.21 or to regulations approved pursuant to 40 CFR 51.166 submits a complete application under the relevant regulations. The trigger date is:

(*a*) In the case of particulate matter and sulfur dioxide, August 7, 1977, and

(*b*) In the case of nitrogen dioxide, February 8, 1988.

(iii) The baseline date is established for each pollutant for which increments or other equivalent measures have been established if:

(*a*) The area in which the proposed source or modification would construct

is designated as attainment or unclassifiable under section 107(d)(i) (D) or (E) of the Act for the pollutant on the date of its complete application under 40 CFR 52.21 or under regulations approved pursuant to 40 CFR 51.166; and

(*b*) In the case of a major stationary source, the pollutant would be emitted in significant amounts, or, in the case of a major modification, there would be a significant net emissions increase of the pollutant.

(iv) Any minor source baseline date established originally for the TSP increments shall remain in effect and shall apply for purposes of determining the amount of available PM–10 increments, except that the reviewing authority may rescind any such minor source baseline date where it can be shown, to the satisfaction of the reviewing authority, that the emissions increase from the major stationary source, or the net emissions increase from the major modification, responsible for triggering that date did not result in a significant amount of PM–10 emissions.

(15)(i) *Baseline area* means any intrastate area (and every part thereof) designated as attainment or unclassifiable under section 107(d)(1) (D) or (E) of the Act in which the major source or major modification establishing the minor source baseline date would construct or would have an air quality impact equal to or greater than 1 $\mu g/m^3$ (annual average) of the pollutant for which the minor source baseline date is established.

(ii) Area redesignations under section 107(d)(1) (D) or (E) of the Act cannot intersect or be smaller than the area of impact of any major stationary source or major modification which:

(*a*) Establishes a minor source baseline date; or

(*b*) Is subject to 40 CFR 52.21 or under regulations approved pursuant to 40 CFR 51.166, and would be constructed in the same State as the State proposing the redesignation.

(iii) Any baseline area established originally for the TSP increments shall remain in effect and shall apply for purposes of determining the amount of available PM–10 increments, except that such baseline area shall not remain in effect if the permit authority rescinds the corresponding minor source baseline date in accordance with paragraph (b)(14)(iv) of this section.

(16) *Allowable emissions* means the emissions rate of a stationary source calculated using the maximum rated capacity of the source (unless the source is subject to federally enforceable limits which restrict the operating rate, or hours of operation, or both) and the most stringent of the following:

(i) The applicable standards as set forth in 40 CFR parts 60 and 61;

(ii) The applicable State Implementation Plan emissions limitation, including those with a future compliance date; or

(iii) The emissions rate specified as a federally enforceable permit condition.

(17) *Federally enforceable* means all limitations and conditions which are enforceable by the Administrator, including those requirements developed pursuant to 40 CFR parts 60 and 61, requirements within any applicable State implementation plan, any permit requirements established pursuant to 40 CFR 52.21 or under regulations approved pursuant to 40 CFR part 51, subpart I, including operating permits issued under an EPA-approved program that is incorporated into the State implementation plan and expressly requires adherence to any permit issued under such program.

(18) *Secondary emissions* means emissions which occur as a result of the construction or operation of a major stationary source or major modification, but do not come from the major stationary source or major modification itself. For the purposes of this section, secondary emissions must be specific, well defined, quantifiable, and impact the same general areas the stationary source modification which causes the secondary emissions. Secondary emissions include emissions from any offsite support facility which would not be constructed or increase its emissions except as a result of the construction or operation of the major stationary source or major modification. Secondary emissions do not include any emissions which come directly from a mobile source, such as emissions from the tailpipe of a motor vehicle, from a train, or from a vessel.

(19) *Innovative control technology* means any system of air pollution control that has not been adequately demonstrated in practice, but would have a substantial likelihood of achieving greater continuous emissions reduction than any control system in current practice or of achieving at least comparable reductions at lower cost in terms of energy, economics, or nonair quality environmental impacts.

(20) *Fugitive emissions* means those emissions which could not reasonably pass through a stack, chimney, vent, or other functionally equivalent opening.

(21)(i) *Actual emissions* means the actual rate of emissions of a pollutant from an emissions unit, as determined in accordance with paragraphs (b)(21)(ii) through (iv) of this section.

(ii) In general, actual emissions as of a particular date shall equal the average rate, in tons per year, at which the unit actually emitted the pollutant during a two-year period which precedes the particular date and which is representative of normal source operation. The reviewing authority may allow the use of a different time period upon a determination that it is more representative of normal source operation. Actual emissions shall be calculated using the unit's actual operating hours, production rates, and types of materials processed, stored, or combusted during the selected time period.

(iii) The reviewing authority may presume that source-specific allowable emissions for the unit are equivalent to the actual emissions of the unit.

(iv) For any emissions unit (other than an electric utility steam generating unit specified in paragraph (b)(21)(v) of this section) which has not begun normal operations on the particular date, actual emissions shall equal the potential to emit of the unit on that date.

(v) For an electric utility steam generating unit (other than a new unit or the replacement of an existing unit) actual emissions of the unit following the physical or operational change shall equal the representative actual annual emissions of the unit following the physical or operational change, provided the source owner or operator maintains and submits to the reviewing authority, on an annual basis for a period of 5 years from the date the unit resumes regular operation, information demonstrating that the physical or operational change did not result in an emissions increase. A longer period, not to exceed 10 years, may be required by the reviewing authority if it determines such a period to be more representative of normal source post-change operations.

(22) *Complete* means, in reference to an application for a permit, that the application contains all the information necessary for processing the application. Designating an application complete for purposes of permit processing does not preclude the reviewing authority from requesting or accepting any additional information.

(23)(i) *Significant* means, in reference to a net emissions increase or the potential of a source to emit any of the following pollutants, a rate of emissions that would equal or exceed any of the following rates:

POLLUTANT AND EMISSIONS RATE

Carbon monoxide: 100 tons per year (tpy)
Nitrogen oxides: 40 tpy
Sulfur dioxide: 40 tpy
Particulate matter: 25 tpy of particulate matter emissions. 15 tpy of PM_{10} emissions.
Ozone: 40 tpy of volatile organic compounds
Lead: 0.6 tpy
Asbestos: 0.007 tpy
Beryllium: 0.0004 tpy
Mercury: 0.1 tpy
Vinyl chloride: 1 tpy
Fluorides: 3 tpy
Sulfuric acid mist: 7 tpy
Hydrogen sulfide (H_2S): 10 tpy
Total reduced sulfur (including H_2S): 10 tpy
Reduced sulfur compounds (including H_2S): 10 tpy
Municipal waste combustor organics (measured as total tetra- through octa-chlorinated dibenzo-p-dioxins and dibenzofurans): 3.2×10^{-6} megagrams per year (3.5×10^{-6} tons per year)
Municipal waste combustor metals (measured as articulate matter): 14 megagrams per year (15 tons per year) Municipal waste combustor acid gases (measured as sulfur dioxide and hydrogen chloride): 36 megagrams per year (40 tons per year)
Municipal solid waste landfill emissions (measured as nonmethane organic compounds): 45 megagrams per year (50 tons per year)

(ii) *Significant* means, in reference to a net emissions increase or the potential of a source to emit a pollutant subject to regulation under the Act that paragraph (b)(23)(i) of this section, does not list, any emissions rate.

(iii) Notwithstanding paragraph (b)(23)(i) of this section, *significant* means any emissions rate or any net emissions increase associated with a major stationary source or major modification, which would construct within 10 kilometers of a Class I area, and have an impact on such area equal to or greater than 1 $\mu g/m^3$ (24-hour average).

(24) *Federal Land Manager* means, with respect to any lands in the United States, the Secretary of the department with authority over such lands.

(25) *High terrain* means any area having an elevation 900 feet or more above the base of the stack of a source.

(26) *Low terrain* means any area other than high terrain.

(27) *Indian Reservation* means any federally recognized reservation established by Treaty, Agreement, Executive Order, or Act of Congress.

(28) *Indian Governing Body* means the governing body of any tribe, band, or group of Indians subject to the jurisdiction of the United States and recognized by the United States as possessing power of self-government.

(29) *Volatile organic compounds (VOC)* is as defined in § 51.100(s) of this part.

(30) *Electric utility steam generating unit* means any steam electric generating unit that is constructed for the purpose of supplying more than one-third of its potential electric output capacity and more than 25 MW electrical output to any utility power distribution system for sale. Any steam supplied to a steam distribution system for the purpose of providing steam to a steam-electric generator that would produce electrical energy for sale is also considered in determining the electrical energy output capacity of the affected facility.

(31) *Pollution control project* means any activity or project undertaken at an existing electric utility steam generating unit for purposes of reducing emissions from such unit. Such activities or projects are limited to:

(i) The installation of conventional or innovative pollution control technology, including but not limited to advanced flue gas desulfurization, sorbent injection for sulfur dioxide and nitrogen oxides controls and electrostatic precipitators;

(ii) An activity or project to accommodate switching to a fuel which is less polluting than the fuel used prior to the activity or project, including but not limited to natural gas or coal re-burning, or the co-firing of natural gas and other fuels for the purpose of controlling emissions;

(iii) A permanent clean coal technology demonstration project conducted under title II, section 101(d) of the Further Continuing Appropriations Act of 1985 (section 5903(d) of title 42 of the United States Code), or subsequent appropriations, up to a total amount of $2,500,000,000 for commercial demonstration of clean coal technology, or similar projects funded through appropriations for the Environmental Protection Agency, or

(iv) A permanent clean coal technology demonstration project that constitutes a repowering project.

(32) *Representative actual annual emissions* means the average rate, in tons per year, at which the source is projected to emit a pollutant for the two-year period after a physical change or change in the method of operation of a unit, (or a different consecutive two-year period within 10 years after that change, where the reviewing authority determines that such period is more representative of normal source operations), considering the effect any such change will have on increasing or decreasing the hourly emissions rate and on projected capacity utilization. In projecting future emissions the reviewing authority shall:

(i) Consider all relevant information, including but not limited to, historical operational data, the company's own representations, filings with the State or Federal regulatory authorities, and compliance plans under title IV of the Clean Air Act; and

(ii) Exclude, in calculating any increase in emissions that results from the particular physical change or change in the method of operation at an electric utility steam generating

unit, that portion of the unit's emissions following the change that could have been accommodated during the representative baseline period and is attributable to an increase in projected capacity utilization at the unit that is unrelated to the particular change, including any increased utilization due to the rate of electricity demand growth for the utility system as a whole.

(33) *Clean coal technology* means any technology, including technologies applied at the precombustion, combustion, or post combustion stage, at a new or existing facility which will achieve significant reductions in air emissions of sulfur dioxide or oxides of nitrogen associated with the utilization of coal in the generation of electricity, or process steam which was not in widespread use as of November 15, 1990.

(34) *Clean coal technology demonstration project* means a project using funds appropriated under the heading ''Department of Energy—Clean Coal Technology'', up to a total amount of $2,500,000,000 for commercial demonstration of clean coal technology, or similar projects funded through appropriations for the Environmental Protection Agency. The Federal contribution for a qualifying project shall be at least 20 percent of the total cost of the demonstration project.

(35) *Temporary clean coal technology demonstration project* means a clean coal technology demonstration project that is operated for a period of 5 years or less, and which complies with the State implementation plan for the State in which the project is located and other requirements necessary to attain and maintain the national ambient air quality standards during and after the project is terminated.

(36)(i) *Repowering* means replacement of an existing coal-fired boiler with one of the following clean coal technologies: atmospheric or pressurized fluidized bed combustion, integrated gasification combined cycle, magnetohydrodynamics, direct and indirect coal-fired turbines, integrated gasification fuel cells, or as determined by the Administrator, in consultation with the Secretary of Energy, a derivative of one or more of these technologies, and any other technology capable of controlling multiple combustion emissions simultaneously with improved boiler or generation efficiency and with significantly greater waste reduction relative to the performance of technology in widespread commercial use as of November 15, 1990.

(ii) Repowering shall also include any oil and/or gas-fired unit which has been awarded clean coal technology demonstration funding as of January 1, 1991, by the Department of Energy.

(iii) The reviewing authority shall give expedited consideration to permit applications for any source that satisfies the requirements of this subsection and is granted an extension under section 409 of the Clean Air Act.

(37) *Reactivation of a very clean coal-fired electric utility steam generating unit* means any physical change or change in the method of operation associated with the commencement of commercial operations by a coal-fired utility unit after a period of discontinued operation where the unit:

(i) Has not been in operation for the two-year period prior to the enactment of the Clean Air Act Amendments of 1990, and the emissions from such unit continue to be carried in the permitting authority's emissions inventory at the time of enactment;

(ii) Was equipped prior to shutdown with a continuous system of emissions control that achieves a removal efficiency for sulfur dioxide of no less than 85 percent and a removal efficiency for particulates of no less than 98 percent;

(iii) Is equipped with low-NO_X burners prior to the time of commencement of operations following reactivation; and

(iv) Is otherwise in compliance with the requirements of the Clean Air Act.

(c) *Ambient air increments.* The plan shall contain emission limitations and such other measures as may be necessary to assure that in areas designated as Class I, II, or III, increases in pollutant concentration over the baseline concentration shall be limited to the following:

Pollutant	Maximum allowable increase (micrograms per cubic meter)
Class I	
Particulate matter:	
PM–10, annual arithmetic mean	4
PM–10, 24-hr maximum	8
Sulfur dioxide:	
Annual arithmetic mean	2
24-hr maximum	5
3-hr maximum	25
Nitrogen dioxide: Annual arithmetic mean	2.5
Class II	
Particulate matter:	
PM–10, annual arithmetic mean	17
PM–10, 24-hr maximum	30
Sulfur dioxide:	
Annual arithmetic mean	20
24-hr maximum	91
3-hr maximum	512
Nitrogen dioxide:	
Annual arithmetic mean	25
Class III	
Particulate matter:	
PM–10, annual arithmetic mean	34
PM–10, 24-hr maximum	60
Sulfur dioxide:	
Annual arithmetic mean	40
24-hr maximum	182
3-hr maximum	700
Nitrogen dioxide: Annual arithmetic mean	50

For any period other than an annual period, the applicable maximum allowable increase may be exceeded during one such period per year at any one location.

(d) *Ambient air ceilings.* The plan shall provide that no concentration of a pollutant shall exceed:

(1) The concentration permitted under the national secondary ambient air quality standard, or

(2) The concentration permitted under the national primary ambient air quality standard, whichever concentration is lowest for the pollutant for a period of exposure.

(e) *Restrictions on area classifications.* The plan shall provide that—

(1) All of the following areas which were in existence on August 7, 1977, shall be Class I areas and may not be redesignated:

(i) International parks,

(ii) National wilderness areas which exceed 5,000 acres in size,

(iii) National memorial parks which exceed 5,000 acres in size, and

(iv) National parks which exceed 6,000 acres in size.

(2) Areas which were redesignated as Class I under regulations promulgated before August 7, 1977, shall remain Class I, but may be redesignated as provided in this section.

(3) Any other area, unless otherwise specified in the legislation creating such an area, is initially designated Class II, but may be redesignated as provided in this section.

(4) The following areas may be redesignated only as Class I or II:

(i) An area which as of August 7, 1977, exceeded 10,000 acres in size and was a national monument, a national primitive area, a national preserve, a national recreational area, a national wild and scenic river, a national wildlife refuge, a national lakeshore or seashore; and

(ii) A national park or national wilderness area established after August 7, 1977, which exceeds 10,000 acres in size.

(f) *Exclusions from increment consumption.* (1) The plan may provide that the following concentrations shall be excluded in determining compliance with a maximum allowable increase:

(i) Concentrations attributable to the increase in emissions from stationary sources which have converted from the use of petroleum products, natural gas, or both by reason of an order in effect under section 2 (a) and (b) of the Energy Supply and Environmental Coordination Act of 1974 (or any superseding legislation) over the emissions from such sources before the effective date of such an order;

(ii) Concentrations attributable to the increase in emissions from sources which have converted from using natural gas by reason of natural gas curtailment plan in effect pursuant to the Federal Power Act over the emissions from such sources before the effective date of such plan;

(iii) Concentrations of particulate matter attributable to the increase in emissions from construction or other temporary emission-related activities of new or modified sources;

(iv) The increase in concentrations attributable to new sources outside the United States over the concentrations

attributable to existing sources which are included in the baseline concentration; and

(v) Concentrations attributable to the temporary increase in emissions of sulfur dioxide, particulate matter, or nitrogen oxides from stationary sources which are affected by plan revisions approved by the Administrator as meeting the criteria specified in paragraph (f)(4) of this section.

(2) If the plan provides that the concentrations to which paragraph (f)(1) (i) or (ii) of this section, refers shall be excluded, it shall also provide that no exclusion of such concentrations shall apply more than five years after the effective date of the order to which paragraph (f)(1)(i) of this section, refers or the plan to which paragraph (f)(1)(ii) of this section, refers, whichever is applicable. If both such order and plan are applicable, no such exclusion shall apply more than five years after the later of such effective dates.

(3) [Reserved]

(4) For purposes of excluding concentrations pursuant to paragraph (f)(1)(v) of this section, the Administrator may approve a plan revision that:

(i) Specifies the time over which the temporary emissions increase of sulfur dioxide, particulate matter, or nitrogen oxides would occur. Such time is not to exceed 2 years in duration unless a longer time is approved by the Administrator.

(ii) Specifies that the time period for excluding certain contributions in accordance with paragraph (f)(4)(i) of this section, is not renewable;

(iii) Allows no emissions increase from a stationary source which would:

(*a*) Impact a Class I area or an area where an applicable increment is known to be violated; or

(*b*) Cause or contribute to the violation of a national ambient air quality standard;

(iv) Requires limitations to be in effect the end of the time period specified in accordance with paragraph (f)(4)(i) of this section, which would ensure that the emissions levels from stationary sources affected by the plan revision would not exceed those levels occurring from such sources before the plan revision was approved.

(g) *Redesignation*. (1) The plan shall provide that all areas of the State (except as otherwise provided under paragraph (e) of this section) shall be designated either Class I, Class II, or Class III. Any designation other than Class II shall be subject to the redesignation procedures of this paragraph. Redesignation (except as otherwise precluded by paragraph (e) of this section) may be proposed by the respective States or Indian Governing Bodies, as provided below, subject to approval by the Administrator as a revision to the applicable State implementation plan.

(2) The plan may provide that the State may submit to the Administrator a proposal to redesignate areas of the State Class I or Class II: *Provided*, That:

(i) At least one public hearing has been held in accordance with procedures established in §51.102.

(ii) Other States, Indian Governing Bodies, and Federal Land Managers whose lands may be affected by the proposed redesignation were notified at least 30 days prior to the public hearing;

(iii) A discussion of the reasons for the proposed redesignation, including a satisfactory description and analysis of the health, environmental, economic, social, and energy effects of the proposed redesignation, was prepared and made available for public inspection at least 30 days prior to the hearing and the notice announcing the hearing contained appropriate notification of the availability of such discussion;

(iv) Prior to the issuance of notice respecting the redesignation of an area that includes any Federal lands, the State has provided written notice to the appropriate Federal Land Manager and afforded adequate opportunity (not in excess of 60 days) to confer with the State respecting the redesignation and to submit written comments and recommendations. In redesignating any area with respect to which any Federal Land Manager had submitted written comments and recommendations, the State shall have published a list of any inconsistency between such redesignation and such comments and recommendations (together with the reasons for making such redesignation

against the recommendation of the Federal Land Manager); and

(v) The State has proposed the redesignation after consultation with the elected leadership of local and other substate general purpose governments in the area covered by the proposed redesignation.

(3) The plan may provide that any area other than an area to which paragraph (e) of this section refers may be redesignated as Class III if—

(i) The redesignation would meet the requirements of provisions established in accordance with paragraph (g)(2) of this section;

(ii) The redesignation, except any established by an Indian Governing Body, has been specifically approved by the Governor of the State, after consultation with the appropriate committees of the legislature, if it is in session, or with the leadership of the legislature, if it is not in session (unless State law provides that such redesignation must be specifically approved by State legislation) and if general purpose units of local government representing a majority of the residents of the area to be redesignated enact legislation (including resolutions where appropriate) concurring in the redesignation;

(iii) The redesignation would not cause, or contribute to, a concentration of any air pollutant which would exceed any maximum allowable increase permitted under the classification of any other area or any national ambient air quality standard; and

(iv) Any permit application for any major stationary source or major modification subject to provisions established in accordance with paragraph (l) of this section which could receive a permit only if the area in question were redesignated as Class III, and any material submitted as part of that application, were available, insofar as was practicable, for public inspection prior to any public hearing on redesignation of any area as Class III.

(4) The plan shall provide that lands within the exterior boundaries of Indian Reservations may be redesignated only by the appropriate Indian Governing Body. The appropriate Indian Governing Body may submit to the Administrator a proposal to redesignate areas Class I, Class II, or Class III: *Provided,* That:

(i) The Indian Governing Body has followed procedures equivalent to those required of a State under paragraphs (g) (2), (3)(iii), and (3)(iv) of this section; and

(ii) Such redesignation is proposed after consultation with the State(s) in which the Indian Reservation is located and which border the Indian Reservation.

(5) The Administrator shall disapprove, within 90 days of submission, a proposed redesignation of any area only if he finds, after notice and opportunity for public hearing, that such redesignation does not meet the procedural requirements of this section or is inconsistent with paragraph (e) of this section. If any such disapproval occurs, the classification of the area shall be that which was in effect prior to the redesignation which was disapproved.

(6) If the Administrator disapproves any proposed area designation, the State or Indian Governing Body, as appropriate, may resubmit the proposal after correcting the deficiencies noted by the Administrator.

(h) *Stack heights.* The plan shall provide, as a minimum, that the degree of emission limitation required for control of any air pollutant under the plan shall not be affected in any manner by—

(1) So much of a stack height, not in existence before December 31, 1970, as exceeds good engineering practice, or

(2) Any other dispersion technique not implemented before then.

(i) *Review of major stationary sources and major modifications—source applicability and exemptions.*

(1) The plan shall provide that no major stationary source or major modification shall begin actual construction unless, as a minumum, requirements equivalent to those contained in paragraphs (j) through (r) of this section have been met.

(2) The plan shall provide that the requirements equivalent to those contained in paragraphs (j) through (r) of this section shall apply to any major stationary source and any major modification with respect to each pollutant subject to regulation under the Act

that it would emit, except as this section would otherwise allow.

(3) The plan shall provide that requirements equivalent to those contained in paragraphs (j) through (r) of this section apply only to any major stationary source or major modification that would be constructed in an area which is designated as attainment or unclassifiable under section 107(a)(1)(D) or (E) of the Act; and

(4) The plan may provide that requirements equivalent to those contained in paragraphs (j) through (r) of this section do not apply to a particular major stationary source or major modification if:

(i) The major stationary source would be a nonprofit health or nonprofit educational institution or a major modification that would occur at such an institution; or

(ii) The source or modification would be a major stationary source or major modification only if fugitive emissions, to the extent quantifiable, are considered in calculating the potential to emit of the stationary source or modification and such source does not belong to any following categories:

(*a*) Coal cleaning plants (with thermal dryers);

(*b*) Kraft pulp mills;

(*c*) Portland cement plants;

(*d*) Primary zinc smelters;

(*e*) Iron and steel mills;

(*f*) Primary aluminum ore reduction plants;

(*g*) Primary copper smelters;

(*h*) Municipal incinerators capable of charging more than 250 tons of refuse per day;

(*i*) Hydrofluoric, sulfuric, or nitric acid plants;

(*j*) Petroleum refineries;

(*k*) Lime plants;

(*l*) Phosphate rock processing plants;

(*m*) Coke oven batteries;

(*n*) Sulfur recovery plants;

(*o*) Carbon black plants (furnace process);

(*p*) Primary lead smelters;

(*q*) Fuel conversion plants;

(*r*) Sintering plants;

(*s*) Secondary metal production plants;

(*t*) Chemical process plants;

(*u*) Fossil-fuel boilers (or combination thereof) totaling more than 250 million British thermal units per hour heat input;

(*v*) Petroleum storage and transfer units with a total storage capacity exceeding 300,000 barrels;

(*w*) Taconite ore processing plants;

(*x*) Glass fiber processing plants;

(*y*) Charcoal production plants;

(*z*) Fossil fuel-fired steam electric plants of more than 250 million British thermal units per hour heat input;

(*aa*) Any other stationary source category which, as of August 7, 1980, is being regulated under section 111 or 112 of the Act; or

(iii) The source or modification is a portable stationary source which has previously received a permit under requirements equivalent to those contained in paragraphs (j) through (r) of this section, if:

(*a*) The source proposes to relocate and emissions of the source at the new location would be temporary; and

(*b*) The emissions from the source would not exceed its allowable emissions; and

(*c*) The emissions from the source would impact no Class I area and no area where an applicable increment is known to be violated; and

(*d*) Reasonable notice is given to the reviewing authority prior to the relocation identifying the proposed new location and the probable duration of operation at the new location. Such notice shall be given to the reviewing authority not less than 10 days in advance of the proposed relocation unless a different time duration is previously approved by the reviewing authority.

(5) The plan may provide that requirements equivalent to those contained in paragraphs (j) through (r) of this section do not apply to a major stationary source or major modification with respect to a particular pollutant if the owner or operator demonstrates that, as to that pollutant, the source or modification is located in an area designated as nonattainment under section 107 of the Act.

(6) The plan may provide that requirements equivalent to those contained in paragraphs (k), (m), and (o) of this section do not apply to a proposed major stationary source or major modification with respect to a particular pollutant, if the allowable

emissions of that pollutant from a new source, or the net emissions increase of that pollutant from a modification, would be temporary and impact no Class I area and no area where an applicable increment is known to be violated.

(7) The plan may provide that requirements equivalent to those contained in paragraphs (k), (m), and (o) of this section as they relate to any maximum allowable increase for a Class II area do not apply to a modification of a major stationary source that was in existence on March 1, 1978, if the net increase in allowable emissions of each pollutant subject to regulation under the Act from the modification after the application of best available control technology would be less than 50 tons per year.

(8) The plan may provide that the reviewing authority may exempt a proposed major stationary source or major modification from the requirements of paragraph (m) of this section, with respect to monitoring for a particular pollutant, if:

(i) The emissions increase of the pollutant from a new stationary source or the net emissions increase of the pollutant from a modification would cause, in any area, air quality impacts less than the following amounts:

(*a*) Carbon monoxide—575 ug/m^3, 8-hour average;

(*b*) Nitrogen dioxide—14 ug/m^3, annual average;

(c) Particulate matter—10 μg/m^3 of PM–10, 24-hour average.

(*d*) Sulfur dioxide—13 ug/m^3, 24-hour average;

(*e*) Ozone;[1]

(*f*) Lead—0.1 μg/m^3, 3-month average.

(*g*) Mercury—0.25 ug/m^3, 24-hour average;

(*h*) Beryllium—0.001 μg/m^3, 24-hour average:

(*i*) Fluorides—0.25 ug/m^3, 24-hour average;

(*j*) Vinyl chloride—15 ug/m^3, 24-hour average;

(*k*) Total reduced sulfur—10 ug/m^3, 1-hour average;

(*l*) Hydrogen sulfide—0.2 μg/m^3, 1-hour average:

(*m*) Reduced sulfur compounds—10 ug/m^3, 1-hour average; or

(ii) The concentrations of the pollutant in the area that the source or modification would affect are less than the concentrations listed in (i)(8)(i) of this section; or

(iii) The pollutants is not listed in paragraph (i)(8)(i) of this section.

(9) If EPA approves a plan revision under 40 CFR 51.166 as in effect before August 7, 1980, any subsequent revision which meets the requirements of this section may contain transition provisions which parallel the transition provisions of 40 CFR 52.21(i)(9), (i)(10) and (m)(1)(v) as in effect on that date, which provisions relate to requirements for best available control technology and air quality analyses. Any such subsequent revision may not contain any transition provision which in the context of the revision would operate any less stringently than would its counterpart in 40 CFR 52.21.

(10) If EPA approves a plan revision under § 51.166 as in effect [before July 31, 1987], any subsequent revision which meets the requirements of this section may contain transition provisions which parallel the transition provisions of § 52.21 (i)(11), and (m)(1) (vii) and (viii) of this chapter as in effect on that date, these provisions being related to monitoring requirements for particulate matter. Any such subsequent revision may not contain any transition provision which in the context of the revision would operate any less stringently than would its counterpart in § 52.21 of this chapter.

(11) The plan may provide that the permitting requirements equivalent to those contained in paragraph (k)(2) of this section do not apply to a stationary source or modification with respect to any maximum allowable increase for nitrogen oxides if the owner or operator of the source or modification submitted an application for a permit under the applicable permit program approved or promulgated under the Act before the provisions embodying the maximum allowable increase took effect as part of the plan and the

[1] No *de minimis* air quality level is provided for ozone. However, any net increase of 100 tons per year or more of volatile organic compounds subject to PSD would be required to perform and ambient impact analysis, including the gathering of ambient air quality data.

permitting authority subsequently determined that the application as submitted before that date was complete.

(12) The plan may provide that the permitting requirements equivalent to those contained in paragraph (k)(2) of this section shall not apply to a stationary source or modification with respect to any maximum allowable increase for PM–10 if (i) the owner or operator of the source or modification submitted an application for a permit under the applicable permit program approved under the Act before the provisions embodying the maximum allowable increases for PM–10 took effect as part of the plan, and (ii) the permitting authority subsequently determined that the application as submitted before that date was complete. Instead, the applicable requirements equivalent to paragraph (k)(2) shall apply with respect to the maximum allowable increases for TSP as in effect on the date the application was submitted.

(j) *Control technology review.* The plan shall provide that:

(1) A major stationary source or major modification shall meet each applicable emissions limitation under the State Implementation Plan and each applicable emission standards and standard of performance under 40 CFR parts 60 and 61.

(2) A new major stationary source shall apply best available control technology for each pollutant subject to regulation under the Act that it would have the potential to emit in significant amounts.

(3) A major modification shall apply best available control technology for each pollutant subject to regulation under the Act for which it would be a significant net emissions increase at the source. This requirement applies to each proposed emissions unit at which a net emissions increase in the pollutant would occur as a result of a physical change or change in the method of operation in the unit.

(4) For phased construction projects, the determination of best available control technology shall be reviewed and modified as appropriate at the least reasonable time which occurs no later than 18 months prior to commencement of construction of each independent phase of the project. At such time, the owner or operator of the applicable stationary source may be required to demonstrate the adequacy of any previous determination of best available control technology for the source.

(k) *Source impact analysis.* The plan shall provide that the owner or operator of the proposed source or modification shall demonstrate that allowable emission increases from the proposed source or modification, in conjunction with all other applicable emissions increases or reduction (including secondary emissions) would not cause or contribute to air pollution in violation of:

(1) Any national ambient air quality standard in any air quality control region; or

(2) Any applicable maximum allowable increase over the baseline concentration in any area.

(l) *Air quality models.* The plan shall provide for procedures which specify that—

(1) All applications of air quality modeling involved in this subpart shall be based on the applicable models, data bases, and other requirements specified in appendix W of this part (Guideline on Air Quality Models).

(2) Where an air quality model specified in appendix W of this part (Guideline on Air Quality Models) is inappropriate, the model may be modified or another model substituted. Such a modification or substitution of a model may be made on a case-by-case basis or, where appropriate, on a generic basis for a specific State program. Written approval of the Administrator must be obtained for any modification or substitution. In addition, use of a modified or substituted model must be subject to notice and opportunity for public comment under procedures set forth in §51.102.

(m) *Air quality analysis*—(1) *Pre-application analysis.* (i) The plan shall provide that any application for a permit under regulations approved pursuant to this section shall contain an analysis of ambient air quality in the area that the major stationary source or major modification would affect for each of the following pollutants:

(*a*) For the source, each pollutant that it would have the potential to emit in a significant amount;

(*b*) For the modification, each pollutant for which it would result in a significant net emissions increase.

(ii) The plan shall provide that, with respect to any such pollutant for which no National Ambient Air Quality Standard exists, the analysis shall contain such air quality monitoring data as the reviewing authority determines is necessary to assess ambient air quality for that pollutant in any area that the emissions of that pollutant would affect.

(iii) The plan shall provide that with respect to any such pollutant (other than nonmethane hydrocarbons) for which such a standard does exist, the analysis shall contain continuous air quality monitoring data gathered for purposes of determining whether emissions of that pollutant would cause or contribute to a violation of the standard or any maxiumum allowable increase.

(iv) The plan shall provide that, in general, the continuous air monitoring data that is required shall have been gathered over a period of one year and shall represent the year preceding receipt of the application, except that, if the reviewing authority determines that a complete and adequate analysis can be accomplished with monitoring data gathered over a period shorter than one year (but not to be less than four months), the data that is required shall have been gathered over at least that shorter period.

(v) The plan may provide that the owner or operator of a proposed major stationary source or major modification of volatile organic compounds who satisfies all conditions of 40 CFR part 51 appendix S, section IV may provide postapproval monitoring data for ozone in lieu of providing preconstruction data as required under paragraph (m)(1) of this section.

(2) *Post-construction monitoring.* The plan shall provide that the owner or operator of a major stationary source or major modification shall, after construction of the stationary source or modification, conduct such ambient monitoring as the reviewing authority determines is necessary to determine the effect emissions from the stationary source or modification may have, or are having, on air quality in any area.

(3) *Operation of monitoring stations.* The plan shall provide that the owner or operator of a major stationary source or major modification shall meet the requirements of appendix B to part 58 of this chapter during the operation of monitoring stations for purposes of satisfying paragraph (m) of this section.

(n) *Source information.* (1) The plan shall provide that the owner or operator of a proposed source or modification shall submit all information necessary to perform any analysis or make any determination required under procedures established in accordance with this section.

(2) The plan may provide that such information shall include:

(i) A description of the nature, location, design capacity, and typical operating schedule of the source or modification, including specifications and drawings showing its design and plant layout;

(ii) A detailed schedule for construction of the source or modification;

(iii) A detailed description as to what system of continuous emission reduction is planned by the source or modification, emission estimates, and any other information as necessary to determine that best available control technology as applicable would be applied;

(3) The plan shall provide that upon request of the State, the owner or operator shall also provide information on:

(i) The air quality impact of the source or modification, including meteorological and topographical data necessary to estimate such impact; and

(ii) The air quality impacts and the nature and extent of any or all general commercial, residential, industrial, and other growth which has occurred since August 7, 1977, in the area the source or modification would affect.

(o) *Additional impact analyses.* The plan shall provide that—

(1) The owner or operator shall provide an analysis of the impairment to visibility, soils, and vegetation that would occur as a result of the source or modification and general commercial,

residential, industrial, and other growth associated with the source or modification. The owner or operator need not provide an analysis of the impact on vegetation having no significant commercial or recreational value.

(2) The owner or operator shall provide an analysis of the air quality impact projected for the area as a result of general commercial, residential, industrial, and other growth associated with the source or modification.

(p) *Sources impacting Federal Class I areas—additional requirements*—(1) *Notice to EPA.* The plan shall provide that the reviewing authority shall transmit to the Administrator a copy of each permit application relating to a major stationary source or major modification and provide notice to the Administrator of every action related to the consideration of such permit.

(2) *Federal Land Manager.* The Federal Land Manager and the Federal official charged with direct responsibility for management of Class I lands have an affirmative responsibility to protect the air quality related values (including visibility) of any such lands and to consider, in consultation with the Administrator, whether a proposed source or modification would have an adverse impact on such values.

(3) *Denial—impact on air quality related values.* The plan shall provide a mechanism whereby a Federal Land Manager of any such lands may present to the State, after the reviewing authority's preliminary determination required under procedures developed in accordance with paragraph (r) of this section, a demonstration that the emissions from the proposed source or modification would have an adverse impact on the air quality-related values (including visibility) of any Federal mandatory Class I lands, notwithstanding that the change in air quality resulting from emissions from such source or modification would not cause or contribute to concentrations which would exceed the maximum allowable increases for a Class I area. If the State concurs with such demonstration, the reviewing authority shall not issue the permit.

(4) *Class I Variances.* The plan may provide that the owner or operator of a proposed source or modification may demonstrate to the Federal Land Manager that the emissions from such source would have no adverse impact on the air quality related values of such lands (including visibility), notwithstanding that the change in air quality resulting from emissions from such source or modification would cause or contribute to concentrations which would exceed the maximum allowable increases for a Class I area. If the Federal land manager concurs with such demonstration and so certifies to the State, the reviewing authority may: *Provided,* That applicable requirements are otherwise met, issue the permit with such emission limitations as may be necessary to assure that emissions of sulfur dioxide, particulate matter, and nitrogen oxides would not exceed the following maximum allowable increases over minor source baseline concentration for such pollutants:

Pollutant	Maximum allowable increase (micrograms per cubic meter)
Particulate matter:	
PM–10, annual arithmetic mean	17
PM–10, 24-hour maximum	30
Sulfur dioxide:	
Annual arithmetic mean	20
24-hr maximum	91
3-hr maximum	325
Nitrogen dioxide: Annual arithmetic mean	25

(5) *Sulfur dioxide variance by Governor with Federal Land Manager's concurrence.* The plan may provide that—

(i) The owner or operator of a proposed source or modification which cannot be approved under procedures developed pursuant to paragraph (q)(4) of this section may demonstrate to the Governor that the source or modification cannot be constructed by reason of any maximum allowable increase for sulfur dioxide for periods of twenty-four hours or less applicable to any Class I area and, in the case of Federal mandatory Class I areas, that a variance under this clause would not adversely affect the air quality related values of the area (including visibility);

(ii) The Governor, after consideration of the Federal Land Manager's recommendation (if any) and subject to

his concurrence, may grant, after notice and an opportunity for a public hearing, a variance from such maximum allowable increase; and

(iii) If such variance is granted, the reviewing authority may issue a permit to such source or modification in accordance with provisions developed pursuant to paragraph (q)(7) of this section: *Provided,* That the applicable requirements of the plan are otherwise met.

(6) *Variance by the Governor with the President's concurrence.* The plan may provide that—

(i) The recommendations of the Governor and the Federal Land Manager shall be transferred to the President in any case where the Governor recommends a variance in which the Federal Land Manager does not concur;

(ii) The President may approve the Governor's recommendation if he finds that such variance is in the national interest; and

(iii) If such a variance is approved, the reviewing authority may issue a permit in accordance with provisions developed pursuant to the requirements of paragraph (q)(7) of this section: *Provided,* That the applicable requirements of the plan are otherwise met.

(7) *Emission limitations for Presidential or gubernatorial variance.* The plan shall provide that in the case of a permit issued under procedures developed pursuant to paragraph (q) (5) or (6) of this section, the source or modification shall comply with emission limitations as may be necessary to assure that emissions of sulfur dioxide from the source or modification would not (during any day on which the otherwise applicable maximum allowable increases are exceeded) cause or contribute to concentrations which would exceed the following maximum allowable increases over the baseline concentration and to assure that such emissions would not cause or contribute to concentrations which exceed the otherwise applicable maximum allowable increases for periods of exposure of 24 hours or less for more than 18 days, not necessarily consecutive, during any annual period:

MAXIMUM ALLOWABLE INCREASE

[Micrograms per cubic meter]

Period of exposure	Terrain areas	
	Low	High
24-hr maximum	36	62
3-hr maximum	130	221

(q) *Public participation.* The plan shall provide that—

(1) The reviewing authority shall notify all applicants within a specified time period as to the completeness of the application or any deficiency in the application or information submitted. In the event of such a deficiency, the date of receipt of the application shall be the date on which the reviewing authority received all required information.

(2) Within one year after receipt of a complete application, the reviewing authority shall:

(i) Make a preliminary determination whether construction should be approved, approved with conditions, or disapproved.

(ii) Make available in at least one location in each region in which the proposed source would be constructed a copy of all materials the applicant submitted, a copy of the preliminary determination, and a copy or summary of other materials, if any, considered in making the preliminary determination.

(iii) Notify the public, by advertisement in a newspaper of general circulation in each region in which the proposed source would be constructed, of the application, the preliminary determination, the degree of increment consumption that is expected from the source or modification, and of the opportunity for comment at a public hearing as well as written public comment.

(iv) Send a copy of the notice of public comment to the applicant, the Administrator and to officials and agencies having cognizance over the location where the proposed construction would occur as follows: Any other State or local air pollution control agencies, the chief executives of the city and county where the source would be located; any comprehensive regional land use planning agency, and any State, Federal Land Manager, or

Indian Governing body whose lands may be affected by emissions from the source or modification.

(v) Provide opportunity for a public hearing for interested persons to appear and submit written or oral comments on the air quality impact of the source, alternatives to it, the control technology required, and other appropriate considerations.

(vi) Consider all written comments submitted within a time specified in the notice of public comment and all comments received at any public hearing(s) in making a final decision on the approvability of the application. The reviewing authority shall make all comments available for public inspection in the same locations where the reviewing authority made available preconstruction information relating to the proposed source or modification.

(vii) Make a final determination whether construction should be approved, approved with conditions, or disapproved.

(viii) Notify the applicant in writing of the final determination and make such notification available for public inspection at the same location where the reviewing authority made available preconstruction information and public comments relating to the source.

(r) *Source obligation.* (1) The plan shall include enforceable procedures to provide that approval to construct shall not relieve any owner or operator of the responsibility to comply fully with applicable provisions of the plan and any other requirements under local, State or Federal law.

(2) The plan shall provide that at such time that a particular source or modification becomes a major stationary source or major modification solely by virtue of a relaxation in any enforceable limitation which was established after August 7, 1980, on the capacity of the source or modification otherwise to emit a pollutant, such as a restriction on hours of operation, then the requirements of paragraphs (j) through (s) of this section shall apply to the source or modification as though construction had not yet commenced on the source or modification.

(s) *Innovative control technology.* (1) The plan may provide that an owner or operator of a proposed major stationary source or major modification may request the reviewing authority to approve a system of innovative control technology.

(2) The plan may provide that the reviewing authority may, with the consent of the Governor(s) of other affected State(s), determine that the source or modification may employ a system of innovative control technology, if:

(i) The proposed control system would not cause or contribute to an unreasonable risk to public health, welfare, or safety in its operation or function;

(ii) The owner or operator agrees to achieve a level of continuous emissions reduction equivalent to that which would have been required under paragraph (j)(2) of this section, by a date specified by the reviewing authority. Such date shall not be later than 4 years from the time of startup or 7 years from permit issuance;

(iii) The source or modification would meet the requirements equivalent to those in paragraphs (j) and (k) of this section, based on the emissions rate that the stationary source employing the system of innovative control technology would be required to meet on the date specified by the reviewing authority;

(iv) The source or modification would not before the date specified by the reviewing authority:

(*a*) Cause or contribute to any violation of an applicable national ambient air quality standard; or

(*b*) Impact any area where an applicable increment is known to be violated;

(v) All other applicable requirements including those for public participation have been met.

(vi) The provisions of paragraph (p) of this section (relating to Class I areas) have been satisfied with respect to all periods during the life of the source or modification.

(3) The plan shall provide that the reviewing authority shall withdraw any approval to employ a system of innovative control technology made under this section, if:

(i) The proposed system fails by the specified date to achieve the required continuous emissions reduction rate; or

(ii) The proposed system fails before the specified date so as to contribute to an unreasonable risk to public health, welfare, or safety; or

(iii) The reviewing authority decides at any time that the proposed system is unlikely to achieve the required level of control or to protect the public health, welfare, or safety.

(4) The plan may provide that if a source or modification fails to meet the required level of continuous emissions reduction within the specified time period, or if the approval is withdrawn in accordance with paragraph (s)(3) of this section, the reviewing authority may allow the source or modification up to an additional 3 years to meet the requirement for the application of best available control technology through use of a demonstrated system of control.

(Secs. 101(b)(1), 110, 160–169, 171–178, and 301(a), Clean Air Act, as amended (42 U.S.C. 7401(b)(1), 7410, 7470–7479, 7501–7508, and 7601(a)); sec. 129(a), Clean Air Act Amendments of 1977 (Pub. L. 95–95, 91 Stat. 685 (Aug. 7, 1977)))

[43 FR 26382, June 19, 1978]

EDITORIAL NOTE: For FEDERAL REGISTER citations affecting § 51.166, see the List of CFR Sections Affected in the Finding Aids section of this volume.

Subpart J—Ambient Air Quality Surveillance

AUTHORITY: Secs. 110, 301(a), 313, 319, Clean Air Act (42 U.S.C. 7410, 7601(a), 7613, 7619).

§ 51.190 Ambient air quality monitoring requirements.

The requirements for monitoring ambient air quality for purposes of the plan are located in subpart C of part 58 of this chapter.

[44 FR 27569, May 10, 1979]

Subpart K—Source Survelliance

SOURCE: 51 FR 40673, Nov. 7, 1986, unless otherwise noted.

§ 51.210 General.

Each plan must provide for monitoring the status of compliance with any rules and regulations that set forth any portion of the control strategy. Specifically, the plan must meet the requirements of this subpart.

§ 51.211 Emission reports and recordkeeping.

The plan must provide for legally enforceable procedures for requiring owners or operators of stationary sources to maintain records of and periodically report to the State—

(a) Information on the nature and amount of emissions from the stationary sources; and

(b) Other information as may be necessary to enable the State to determine whether the sources are in compliance with applicable portions of the control strategy.

§ 51.212 Testing, inspection, enforcement, and complaints.

The plan must provide for—

(a) Periodic testing and inspection of stationary sources; and

(b) Establishment of a system for detecting violations of any rules and regulations through the enforcement of appropriate visible emission limitations and for investigating complaints.

(c) Enforceable test methods for each emission limit specified in the plan. For the purpose of submitting compliance certifications or establishing whether or not a person has violated or is in violation of any standard in this part, the plan must not preclude the use, including the exclusive use, of any credible evidence or information, relevant to whether a source would have been in compliance with applicable requirements if the appropriate performance or compliance test or procedure had been performed. As an enforceable method, States may use:

(1) Any of the appropriate methods in appendix M to this part, Recommended Test Methods for State Implementation Plans; or

(2) An alternative method following review and approval of that method by the Administrator; or

(3) Any appropriate method in appendix A to 40 CFR part 60.

[51 FR 40673, Nov. 7, 1986, as amended at 55 FR 14249, Apr. 17, 1990; 62 FR 8328, Feb. 24, 1997]

§ 51.213 Transportation control measures.

(a) The plan must contain procedures for obtaining and maintaining data on actual emissions reductions achieved as a result of implementing transportation control measures.

(b) In the case of measures based on traffic flow changes or reductions in vehicle use, the data must include observed changes in vehicle miles traveled and average speeds.

(c) The data must be maintained in such a way as to facilitate comparison of the planned and actual efficacy of the transportation control measures.

[61 FR 30163, June 14, 1996]

§ 51.214 Continuous emission monitoring.

(a) The plan must contain legally enforceable procedures to—

(1) Require stationary sources subject to emission standards as part of an applicable plan to install, calibrate, maintain, and operate equipment for continuously monitoring and recording emissions; and

(2) Provide other information as specified in appendix P of this part.

(b) The procedures must—

(1) Identify the types of sources, by source category and capacity, that must install the equipment; and

(2) Identify for each source category the pollutants which must be monitored.

(c) The procedures must, as a minimum, require the types of sources set forth in appendix P of this part to meet the applicable requirements set forth therein.

(d)(1) The procedures must contain provisions that require the owner or operator of each source subject to continuous emission monitoring and recording requirements to maintain a file of all pertinent information for at least two years following the date of collection of that information.

(2) The information must include emission measurements, continuous monitoring system performance testing measurements, performance evaluations, calibration checks, and adjustments and maintenance performed on such monitoring systems and other reports and records required by appendix P of this part.

(e) The procedures must require the source owner or operator to submit information relating to emissions and operation of the emission monitors to the State to the extent described in appendix P at least as frequently as described therein.

(f)(1) The procedures must provide that sources subject to the requirements of paragraph (c) of this section must have installed all necessary equipment and shall have begun monitoring and recording within 18 months after either—

(i) The approval of a State plan requiring monitoring for that source; or

(ii) Promulgation by the Agency of monitoring requirements for that source.

(2) The State may grant reasonable extensions of this period to sources that—

(i) Have made good faith efforts to purchases, install, and begin the monitoring and recording of emission data; and

(ii) Have been unable to complete the installation within the period.

Subpart L—Legal Authority

SOURCE: 51 FR 40673, Nov. 7, 1986, unless otherwise noted.

§ 51.230 Requirements for all plans.

Each plan must show that the State has legal authority to carry out the plan, including authority to:

(a) Adopt emission standards and limitations and any other measures necessary for attainment and maintenance of national standards.

(b) Enforce applicable laws, regulations, and standards, and seek injunctive relief.

(c) Abate pollutant emissions on an emergency basis to prevent substantial endangerment to the health of persons, i.e., authority comparable to that available to the Administrator under section 305 of the Act.

(d) Prevent construction, modification, or operation of a facility, building, structure, or installation, or combination thereof, which directly or indirectly results or may result in emissions of any air pollutant at any location which will prevent the attainment or maintenance of a national standard.

(e) Obtain information necessary to determine whether air pollution sources are in compliance with applicable laws, regulations, and standards, including authority to require recordkeeping and to make inspections and conduct tests of air pollution sources.

(f) Require owners or operators of stationary sources to install, maintain, and use emission monitoring devices and to make periodic reports to the State on the nature and amounts of emissions from such stationary sources; also authority for the State to make such data available to the public as reported and as correlated with any applicable emission standards or limitations.

§ 51.231 Identification of legal authority.

(a) The provisions of law or regulation which the State determines provide the authorities required under this section must be specifically identified, and copies of such laws or regulations be submitted with the plan.

(b) The plan must show that the legal authorities specified in this subpart are available to the State at the time of submission of the plan.

(c) Legal authority adequate to fulfill the requirements of § 51.230 (e) and (f) of this subpart may be delegated to the State under section 114 of the Act.

§ 51.232 Assignment of legal authority to local agencies.

(a) A State government agency other than the State air pollution control agency may be assigned responsibility for carrying out a portion of a plan if the plan demonstrates to the Administrator's satisfaction that the State governmental agency has the legal authority necessary to carry out the portion of plan.

(b) The State may authorize a local agency to carry out a plan, or portion thereof, within such local agency's jurisdiction if—

(1) The plan demonstrates to the Administrator's satisfaction that the local agency has the legal authority necessary to implement the plan or portion of it; and

(2) This authorization does not relieve the State of responsibility under the Act for carrying out such plan, or portion thereof.

Subpart M—Intergovernmental Consultation

AUTHORITY: Secs. 110, 121, 174(a), 301(a), Clean Air Act, as amended (42 U.S.C. 7410, 7421, 7504, and 7601(a)).

SOURCE: 44 FR 35179, June 18, 1979, unless otherwise noted.

AGENCY DESIGNATION

§ 51.240 General plan requirements.

Each State implementation plan must identify organizations, by official title, that will participate in developing, implementing, and enforcing the plan and the responsibilities of such organizations. The plan shall include any related agreements or memoranda of understanding among the organizations.

§ 51.241 Nonattainment areas for carbon monoxide and ozone.

(a) For each AQCR or portion of an AQCR in which the national primary standard for carbon monoxide or ozone will not be attained by July 1, 1979, the Governor (or Governors for interstate areas) shall certify, after consultation with local officials, the organization responsible for developing the revised implementation plan or portions thereof for such AQCR.

(b)–(f) [Reserved]

[44 FR 35179, June 18, 1979, as amended at 48 FR 29302, June 24, 1983; 60 FR 33922, June 29, 1995; 61 FR 16060, Apr. 11, 1996]

§ 51.242 [Reserved]

Subpart N—Compliance Schedules

SOURCE: 51 FR 40673, Nov. 7, 1986, unless otherwise noted.

§ 51.260 Legally enforceable compliance schedules.

(a) Each plan shall contain legally enforceable compliance schedules setting forth the dates by which all stationary and mobile sources or categories of such sources must be in compliance with any applicable requirement of the plan.

(b) The compliance schedules must contain increments of progress required by § 51.262 of this subpart.

§ 51.261 Final compliance schedules.

(a) Unless EPA grants an extension under subpart R, compliance schedules designed to provide for attainment of a primary standard must—

(1) Provide for compliance with the applicable plan requirements as soon as practicable; or

(2) Provide for compliance no later than the date specified for attainment of the primary standard under;

(b) Unless EPA grants an extension under subpart R, compliance schedules designed to provide for attainment of a secondary standard must—

(1) Provide for compliance with the applicable plan requirements in a reasonable time; or

(2) Provide for compliance no later than the date specified for the attainment of the secondary standard under § 51.110(c).

§ 51.262 Extension beyond one year.

(a) Any compliance schedule or revision of it extending over a period of more than one year from the date of its adoption by the State agency must provide for legally enforceable increments of progress toward compliance by each affected source or category of sources. The increments of progress must include—

(1) Each increment of progress specified in § 51.100(q); and

(2) Additional increments of progress as may be necessary to permit close and effective supervision of progress toward timely compliance.

(b) [Reserved]

Subpart O—Miscellaneous Plan Content Requirements

AUTHORITY: Secs. 110, 301(a), 313, 319, Clean Air Act (42 U.S.C. 7410, 7601(a), 7613, 7619).

§ 51.280 Resources.

Each plan must include a description of the resources available to the State and local agencies at the date of submission of the plan and of any additional resources needed to carry out the plan during the 5-year period following its submission. The description must include projections of the extent to which resources will be acquired at 1-, 3-, and 5-year intervals.

[51 FR 40674, Nov. 7, 1986]

§ 51.281 Copies of rules and regulations.

Emission limitations and other measures necessary for attainment and maintenance of any national standard, including any measures necessary to implement the requirements of subpart L must be adopted as rules and regulations enforceable by the State agency. Copies of all such rules and regulations must be submitted with the plan. Submittal of a plan setting forth proposed rules and regulations will not satisfy the requirements of this section nor will it be considered a timely submittal.

[51 FR 40674, Nov. 7, 1986]

§ 51.285 Public notification.

By March 1, 1980, the State shall submit a plan revision that contains provisions for:

(a) Notifying the public on a regular basis of instances or areas in which any primary standard was exceeded during any portion of the preceeding calendar year,

(b) Advising the public of the health hazards associated with such an exceedance of a primary standard, and

(c) Increasing public awareness of:

(1) Measures which can be taken to prevent a primary standard from being exceeded, and

(2) Ways in which the public can participate in regulatory and other efforts to improve air quality.

[44 FR 27569, May 10, 1979]

Subpart P—Protection of Visibility

AUTHORITY: Secs. 110, 114, 121, 160–169, 169A, and 301 of the Clean Air Act, (42 U.S.C. 7410, 7414, 7421, 7470–7479, and 7601).

SOURCE: 45 FR 80089, Dec. 2, 1980, unless otherwise noted.

§ 51.300 Purpose and applicability.

(a) *Purpose.* The primary purposes of this subpart are to require States to develop programs to assure reasonable

progress toward meeting the national goal of preventing any future, and remedying any existing, impairment of visibility in mandatory Class I Federal areas which impairment results from manmade air pollution; and to establish necessary additional procedures for new source permit applicants, States and Federal Land Managers to use in conducting the visibility impact analysis required for new sources under § 51.166. This subpart sets forth requirements addressing visibility impairment in its two principal forms: ''reasonably attributable'' impairment (i.e., impairment attributable to a single source/small group of sources) and regional haze (i.e., widespread haze from a multitude of sources which impairs visibility in every direction over a large area).

(b) *Applicability*. (1) *General Applicability*. The provisions of this subpart pertaining to implementation plan requirements for assuring reasonable progress in preventing any future and remedying any existing visibility impairment are applicable to:

(i) Each State which has a mandatory Class I Federal area identified in part 81, subpart D, of this title, and (ii) each State in which there is any source the emissions from which may reasonably be anticipated to cause or contribute to any impairment of visibility in any such area.

(2) The provisions of this subpart pertaining to implementation plans to address reasonably attributable visibility impairment are applicable to the following States:

Alabama, Alaska, Arizona, Arkansas, California, Colorado, Florida, Georgia, Hawaii, Idaho, Kentucky, Louisiana, Maine, Michigan, Minnesota, Missouri, Montana, Nevada, New Hampshire, New Jersey, New Mexico, North Carolina, North Dakota, Oklahoma, Oregon, South Carolina, South Dakota, Tennessee, Texas, Utah, Vermont, Virginia, Virgin Islands, Washington, West Virginia, Wyoming.

(3) The provisions of this subpart pertaining to implementation plans to address regional haze visibility impairment are applicable to all States as defined in section 302(d) of the Clean Air Act (CAA) except Guam, Puerto Rico, American Samoa, and the Northern Mariana Islands.

[45 FR 80089, Dec. 2, 1980, as amended at 64 FR 35763, July 1, 1999]

EFFECTIVE DATE NOTE: At 64 FR 35763, July 1, 1999, § 51.300 was amended by revising paragraphs (a), (b)(1) introductory text, and (b)(2), and by adding paragraph (b)(3), effective Aug. 30, 1999. For the convenience of the user, the superseded text follows:

§ 51.300 Purpose and applicability.

(a) *Purpose.* The primary purposes of this subpart are (1) to require States to develop programs to assure reasonable progress toward meeting the national goal of preventing any future, and remedying and existing, impairment of visibility in mandatory Class I Federal areas which impairment results from man-made air pollution, and (2) to establish necessary additional procedures for new source permit applicants, States, and Federal Land Managers to use in conducting the visibility impact analysis required for new sources under § 51.24.

(b) *Applicability*. (1) The provisions of this subpart are applicable to:

* * * * *

(2) The provisions of this subpart are applicable to the following States:

(i) Alabama
(ii) Alaska
(iii) Arizona
(iv) Arkansas
(v) California
(vi) Colorado
(vii) Florida
(viii) Georgia
(ix) Hawaii
(x) Idaho
(xi) Kentucky
(xii) Louisiana
(xiii) Maine
(xiv) Michigan
(xv) Minnesota
(xvi) Missouri
(xvii) Montana
(xviii) Nevada
(xix) New Hampshire
(xx) New Jersey
(xxi) New Mexico
(xxii) North Carolina
(xxiii) North Dakota
(xxiv) Oklahoma
(xxv) Oregon
(xxvi) South Carolina
(xxvii) South Dakota
(xxviii) Tennessee
(xxix) Texas
(xxx) Utah
(xxxi) Vermont
(xxxii) Virginia

(xxxiii) Virgin Islands
(xxxiv) Washington
(xxxv) West Virginia
(xxxvi) Wyoming

§51.301 Definitions.

For purposes of this subpart:

Adverse impact on visibility means, for purposes of section 307, visibility impairment which interferes with the management, protection, preservation, or enjoyment of the visitor's visual experience of the Federal Class I area. This determination must be made on a case-by-case basis taking into account the geographic extent, intensity, duration, frequency and time of visibility impairments, and how these factors correlate with (1) times of visitor use of the Federal Class I area, and (2) the frequency and timing of natural conditions that reduce visibility. This term does not include effects on integral vistas.

Agency means the U.S. Environmental Protection Agency.

BART-eligible source means an *existing stationary facility* as defined in this section.

Best Available Retrofit Technology (BART) means an emission limitation based on the degree of reduction achievable through the application of the best system of continuous emission reduction for each pollutant which is emitted by an existing stationary facility. The emission limitation must be established, on a case-by-case basis, taking into consideration the technology available, the costs of compliance, the energy and nonair quality environmental impacts of compliance, any pollution control equipment in use or in existence at the source, the remaining useful life of the source, and the degree of improvement in visibility which may reasonably be anticipated to result from the use of such technology.

Building, structure, or facility means all of the pollutant-emitting activities which belong to the same industrial grouping, are located on one or more contiguous or adjacent properties, and are under the control of the same person (or persons under common control). Pollutant-emitting activities must be considered as part of the same industrial grouping if they belong to the same *Major Group* (i.e., which have the same two-digit code) as described in the *Standard Industrial Classification Manual, 1972* as amended by the 1977 Supplement (U.S. Government Printing Office stock numbers 4101–0066 and 003–005–00176–0 respectively).

Deciview means a measurement of visibility impairment. A deciview is a haze index derived from calculated light extinction, such that uniform changes in haziness correspond to uniform incremental changes in perception across the entire range of conditions, from pristine to highly impaired. The deciview haze index is calculated based on the following equation (for the purposes of calculating deciview, the atmospheric light extinction coefficient must be calculated from aerosol measurements):

Deciview haze index=10 $\ln_e$ (b_{ext}/10 Mm^{-1}).

Where b_{ext}=the atmospheric light extinction coefficient, expressed in inverse megameters (Mm^{-1}).

Existing stationary facility means any of the following stationary sources of air pollutants, including any reconstructed source, which was not in operation prior to August 7, 1962, and was in existence on August 7, 1977, and has the potential to emit 250 tons per year or more of any air pollutant. In determining potential to emit, fugitive emissions, to the extent quantifiable, must be counted.

Fossil-fuel fired steam electric plants of more than 250 million British thermal units per hour heat input,

Coal cleaning plants (thermal dryers),

Kraft pulp mills,

Portland cement plants,

Primary zinc smelters,

Iron and steel mill plants,

Primary aluminum ore reduction plants,

Primary copper smelters,

Municipal incinerators capable of charging more than 250 tons of refuse per day,

Hydrofluoric, sulfuric, and nitric acid plants,

Petroleum refineries,

Lime plants,

Phosphate rock processing plants,

Coke oven batteries,

Sulfur recovery plants,

Carbon black plants (furnace process),

Primary lead smelters,

Fuel conversion plants,

Sintering plants,

Secondary metal production facilities,

Chemical process plants,

Fossil-fuel boilers of more than 250 million British thermal units per hour heat input,

Petroleum storage and transfer facilities with a capacity exceeding 300,000 barrels,

Taconite ore processing facilities,

Glass fiber processing plants, and

Charcoal production facilities.

Federal Class I area means any Federal land that is classified or reclassified *Class I*.

Federal Land Manager means the Secretary of the department with authority over the Federal Class I area (or the Secretary's designee) or, with respect to Roosevelt-Campobello International Park, the Chairman of the Roosevelt-Campobello International Park Commission.

Federally enforceable means all limitations and conditions which are enforceable by the Administrator under the Clean Air Act including those requirements developed pursuant to parts 60 and 61 of this title, requirements within any applicable State Implementation Plan, and any permit requirements established pursuant to § 52.21 of this chapter or under regulations approved pursuant to part 51, 52, or 60 of this title.

Fixed capital cost means the capital needed to provide all of the depreciable components.

Fugitive Emissions means those emissions which could not reasonably pass through a stack, chimney, vent, or other functionally equivalent opening.

Geographic enhancement for the purpose of § 51.308 means a method, procedure, or process to allow a broad regional strategy, such as an emissions trading program designed to achieve greater reasonable progress than BART for regional haze, to accommodate BART for reasonably attributable impairment.

Implementation plan means, for the purposes of this part, any State Implementation Plan, Federal Implementation Plan, or Tribal Implementation Plan.

Indian tribe or *tribe* means any Indian tribe, band, nation, or other organized group or community, including any Alaska Native village, which is federally recognized as eligible for the special programs and services provided by the United States to Indians because of their status as Indians.

In existence means that the owner or operator has obtained all necessary preconstruction approvals or permits required by Federal, State, or local air pollution emissions and air quality laws or regulations and either has (1) begun, or caused to begin, a continuous program of physical on-site construction of the facility or (2) entered into binding agreements or contractual obligations, which cannot be cancelled or modified without substantial loss to the owner or operator, to undertake a program of construction of the facility to be completed in a reasonable time.

In operation means engaged in activity related to the primary design function of the source.

Installation means an identifiable piece of process equipment.

Integral vista means a view perceived from within the mandatory Class I Federal area of a specific landmark or panorama located outside the boundary of the mandatory Class I Federal area.

Least impaired days means the average visibility impairment (measured in deciviews) for the twenty percent of monitored days in a calendar year with the lowest amount of visibility impairment.

Major stationary source and major modification mean major stationary source and major modification, respectively, as defined in § 51.166.

Mandatory Class I Federal Area means any area identified in part 81, subpart D of this title.

Most impaired days means the average visibility impairment (measured in deciviews) for the twenty percent of monitored days in a calendar year with the highest amount of visibility impairment.

Natural conditions includes naturally occurring phenomena that reduce visibility as measured in terms of light extinction, visual range, contrast, or coloration.

Potential to emit means the maximum capacity of a stationary source to emit a pollutant under its physical and operational design. Any physical or operational limitation on the capacity of the source to emit a pollutant including air pollution control equipment and restrictions on hours of operation or on the type or amount of material combusted, stored, or processed, shall be treated as part of its design if the limitation or the effect it would have on emissions is federally enforceable. Secondary emissions do not count in determining the potential to emit of a stationary source.

Reasonably attributable means attributable by visual observation or any other technique the State deems appropriate.

Reasonably attributable visibility impairment means visibility impairment that is caused by the emission of air pollutants from one, or a small number of sources.

Reconstruction will be presumed to have taken place where the fixed capital cost of the new component exceeds 50 percent of the fixed capital cost of a comparable entirely new source. Any final decision as to whether reconstruction has occurred must be made in accordance with the provisions of §60.15 (f) (1) through (3) of this title.

Regional haze means visibility impairment that is caused by the emission of air pollutants from numerous sources located over a wide geographic area. Such sources include, but are not limited to, major and minor stationary sources, mobile sources, and area sources.

Secondary emissions means emissions which occur as a result of the construction or operation of an existing stationary facility but do not come from the existing stationary facility. Secondary emissions may include, but are not limited to, emissions from ships or trains coming to or from the existing stationary facility.

Significant impairment means, for purposes of § 51.303, visibility impairment which, in the judgment of the Administrator, interferes with the management, protection, preservation, or enjoyment of the visitor's visual experience of the mandatory Class I Federal area. This determination must be made on a case-by-case basis taking into account the geographic extent, intensity, duration, frequency and time of the visibility impairment, and how these factors correlate with (1) times of visitor use of the mandatory Class I Federal area, and (2) the frequency and timing of natural conditions that reduce visibility.

State means ''State'' as defined in section 302(d) of the CAA.

Stationary Source means any building, structure, facility, or installation which emits or may emit any air pollutant.

Visibility impairment means any humanly perceptible change in visibility (light extinction, visual range, contrast, coloration) from that which would have existed under natural conditions.

Visibility in any mandatory Class I Federal area includes any integral vista associated with that area.

[45 FR 80089, Dec. 2, 1980, as amended at 64 FR 35763, 35774, July 1, 1999]

EFFECTIVE DATE NOTE: At 64 FR 35763, 35774, July 1, 1999, §51.301 was amended by removing the paragraph designations, placing the defined terms in alphabetical order, revising the definitions of *Federal Land Manager*, *Major Stationary Source*, *Natural conditions*, and *Visibility impairment*, and adding in alphabetical order definitions of *Reasonably attributable visibility impairment*, *Regional haze*, *Deciview*, *State*, *Most impaired days*, *Least impaired days*, *Implementation plan*, *Indian tribe* or *tribe*, *BART-eligible source*, *Geographic enhancement for the purpose of §51.308*, and removing ''Section 303'' and adding in its place ''§51.303'' in the definition of ''Significant impairment'', effective Aug. 30, 1999. For the convenience of the user, the superseded text follows:

§51.301 Definitions.

* * * * *

(g) *Federal Land Manager* means the Secretary of the department with authority over the Federal Class I area or, with respect to Roosevelt-Campobello International Park, the Chairman of the Roosevelt-Campobello International Park Commission.

* * * * *

(p) *Major Stationary Source* and *major modification* mean *major stationary source* and *major modification*, respectively, as defined in §51.24.

(q) *Natural conditions* includes naturally occurring phenomena that reduce visibility as measured in terms of visual range, contrast, or coloration.

* * * * *

(x) *Visibility impairment* means any humanly perceptible change in visibility (visual range, contrast, coloration) from that which would have existed under natural conditions.

* * * * *

§ 51.302 Implementation control strategies for reasonably attributable visibility impairment.

(a) *Plan Revision Procedures.* (1) Each State identified in § 51.300(b)(2) must have submitted, not later than September 2, 1981, an implementation plan meeting the requirements of this subpart pertaining to reasonably attributable visibility impairment.

(2)(i) The State, prior to adoption of any implementation plan to address reasonably attributable visibility impairment required by this subpart, must conduct one or more public hearings on such plan in accordance with § 51.102.

(ii) In addition to the requirements in § 51.102, the State must provide written notification of such hearings to each affected Federal Land Manager, and other affected States, and must state where the public can inspect a summary prepared by the Federal Land Managers of their conclusions and recommendations, if any, on the proposed plan revision.

(3) Submission of plans as required by this subpart must be conducted in accordance with the procedures in § 51.103.

(b) *State and Federal Land Manager Coordination.* (1) The State must identify to the Federal Land Managers, in writing and within 30 days of the date of promulgation of these regulations, the title of the official to which the Federal Land Manager of any mandatory Class I Federal area can submit a recommendation on the implementation of this subpart including, but not limited to:

(i) A list of integral vistas that are to be listed by the State for the purpose of implementing section 304,

(ii) Identification of impairment of visibility in any mandatory Class I Federal area(s), and

(iii) Identification of elements for inclusion in the visibility monitoring strategy required by section 305.

(2) The State must provide opportunity for consultation, in person and at least 60 days prior to holding any public hearing on the plan, with the Federal Land Manager on the proposed SIP revision required by this subpart. This consultation must include the opportunity for the affected Federal Land Managers to discuss their:

(i) Assessment of impairment of visibility in any mandatory Class I Federal area, and

(ii) Recommendations on the development of the long-term strategy.

(3) The plan must provide procedures for continuing consultation between the State and Federal Land Manager on the implementation of the visibility protection program required by this subpart.

(c) *General plan requirements for reasonably attributable visibility impairment.* (1) The affected Federal Land Manager may certify to the State, at any time, that there exists reasonably attributable impairment of visibility in any mandatory Class I Federal area.

(2) The plan must contain the following to address reasonably attributable impairment:

(i) A long-term (10–15 years) strategy, as specified in § 51.305 and § 51.306, including such emission limitations, schedules of compliance, and such other measures including schedules for the implementation of the elements of the long-term strategy as may be necessary to make reasonable progress toward the national goal specified in § 51.300(a).

(ii) An assessment of visibility impairment and a discussion of how each element of the plan relates to the preventing of future or remedying of existing impairment of visibility in any mandatory Class I Federal area within the State.

(iii) Emission limitations representing BART and schedules for compliance with BART for each existing stationary facility identified according to paragraph (c)(4) of this section.

(3) The plan must require each source to maintain control equipment required by this subpart and establish procedures to ensure such control equipment is properly operated and maintained.

(4) For any existing reasonably attributable visibility impairment the Federal Land Manager certifies to the State under paragraph (c)(1) of this section, at least 6 months prior to plan submission or revision:

(i) The State must identify and analyze for BART each existing stationary facility which may reasonably be anticipated to cause or contribute to impairment of visibility in any mandatory Class I Federal area where the impairment in the mandatory Class I Federal area is reasonably attributable to that existing stationary facility. The State need not consider any integral vista the Federal Land Manager did not identify pursuant to § 51.304(b) at least 6 months before plan submission.

(ii) If the State determines that technologicial or economic limitations on the applicability of measurement methodology to a particular existing stationary facility would make the imposition of an emission standard infeasible it may instead prescribe a design, equipment, work practice, or other operational standard, or combination thereof, to require the application of BART. Such standard, to the degree possible, is to set forth the emission reduction to be achieved by implementation of such design, equipment, work practice or operation, and must provide for compliance by means which achieve equivalent results.

(iii) BART must be determined for fossil-fuel fired generating plants having a total generating capacity in excess of 750 megawatts pursuant to ''Guidelines for Determining Best Available Retrofit Technology for Coal-fired Power Plants and Other Existing Stationary Facilities'' (1980), which is incorporated by reference, exclusive of appendix E, which was published in the FEDERAL REGISTER on February 6, 1980 (45 FR 8210). It is EPA publication No. 450/3–80–009b and is for sale from the U.S. Department of Commerce, National Technical Information Service, 5285 Port Royal Road, Springfield, Virginia 22161. It is also available for inspection at the Office of the Federal Register Information Center, 800 North Capitol NW., suite 700, Washington, DC.

(iv) The plan must require that each existing stationary facility required to install and operate BART do so as expeditiously as practicable but in no case later than five years after plan approval.

(v) The plan must provide for a BART analysis of any existing stationary facility that might cause or contribute to impairment of visibility in any mandatory Class I Federal area identified under this paragraph (c)(4) at such times, as determined by the Administrator, as new technology for control of the pollutant becomes reasonably available if:

(A) The pollutant is emitted by that existing stationary facility,

(B) Controls representing BART for the pollutant have not previously been required under this subpart, and

(C) The impairment of visibility in any mandatory Class I Federal area is reasonably attributable to the emissions of that pollutant.

[45 FR 80089, Dec. 2, 1980, as amended at 57 FR 40042, Sept. 1, 1992; 64 FR 35764, 35774, July 1, 1999]

EFFECTIVE DATE NOTE: At 64 FR 35764, 35774, July 1, 1999, § 51.302 was amended in paragraph (c)(2)(i) by removing ''Section 305'' and adding ''§ 51.305'', by removing ''Section 306'' and adding ''§ 51.306'', by removing ''Section 300(a)'' and adding ''§ 51.300(a)'' and in paragraph (c)(4)(i) by removing ''Section 304(b)'' and adding ''§ 51.304(b)'', and by revising the section heading, paragraphs (a), (c) introductory text, (c)(1), (c)(2) introductory text, (c)(4) introductory text, and (c)(4)(iv), effective Aug. 30, 1999. For the convenience of the user, the superseded text is set forth as follows:

§ 51.302 Implementation control strategies.

(a) *Plan Revision Procedures.* (1) Each State identified in section 300(b)(2) must submit, no later than nine months from the date of promulgation of this regulation, an implementation plan revision meeting the requirements of this subpart.

(2)(i) The State, prior to adoption of any implementation plan required by this subpart, must conduct one or more public hearings on such plan in accordance with § 51.4.

(ii) In addition to the requirements in § 51.4, the State must provide written notification of such hearings to each affected Federal Land Manager, and other affected

States, and must state where the public can inspect a summary prepared by the Federal Land Managers of their conclusions and recommendations, if any, on the proposed plan.

(3) Submission of plans as required by this subpart must be conducted in accordance with the procedures in § 51.5.

* * * * *

(c) *General Plan Requirements.* (1) The affected Federal Land Manager may certify to the State, at any time, that there exists impairment of visibility in any mandatory Class I Federal area.

(2) The plan must contain:

* * * * *

(4) For any existing visibility impairment the Federal Land Manager certifies to the State under paragraph (c)(1) of this section, at least 6 months prior to plan submission:

* * * * *

(iv) The plan must require that each existing stationary facility required to install and operate BART do so as expeditiously as practicable but in no case later than five years after plan approval.

* * * * *

§ 51.303 Exemptions from control.

(a)(1) Any existing stationary facility subject to the requirement under § 51.302 to install, operate, and maintain BART may apply to the Administrator for an exemption from that requirement.

(2) An application under this section must include all available documentation relevant to the impact of the source's emissions on visibility in any mandatory Class I Federal area and a demonstration by the existing stationary facility that it does not or will not, by itself or in combination with other sources, emit any air pollutant which may be reasonably anticipated to cause or contribute to a significant impairment of visibility in any mandatory Class I Federal area.

(b) Any fossil-fuel fired power plant with a total generating capacity of 750 megawatts or more may receive an exemption from BART only if the owner or operator of such power plant demonstrates to the satisfaction of the Administrator that such power plant is located at such a distance from all mandatory Class I Federal areas that such power plant does not or will not, by itself or in combination with other sources, emit any air pollutant which may reasonably be anticipated to cause or contribute to significant impairment of visibility in any such mandatory Class I Federal area.

(c) Application under this § 51.303 must be accompanied by a written concurrence from the State with regulatory authority over the source.

(d) The existing stationary facility must give prior written notice to all affected Federal Land Managers of any application for exemption under this § 51.303.

(e) The Federal Land Manager may provide an initial recommendation or comment on the disposition of such application. Such recommendation, where provided, must be part of the exemption application. This recommendation is not to be construed as the concurrence required under paragraph (h) of this section.

(f) The Administrator, within 90 days of receipt of an application for exemption from control, will provide notice of receipt of an exemption application and notice of opportunity for public hearing on the application.

(g) After notice and opportunity for public hearing, the Administrator may grant or deny the exemption. For purposes of judicial review, final EPA action on an application for an exemption under this § 51.303 will not occur until EPA approves or disapproves the State Implementation Plan revision.

(h) An exemption granted by the Administrator under this § 51.303 will be effective only upon concurrence by all affected Federal Land Managers with the Administrator's determination.

[45 FR 80089, Dec. 2, 1980, as amended by 64 FR 35774, July 1, 1999]

EFFECTIVE DATE NOTE: At 64 FR 35774, July 1, 1999, § 51.303 was amended in paragraph (a)(1) by removing ''Section 302'' and adding ''§ 51.302'' and in paragraphs (c), (d), (g) and (h) by removing ''Section 303'' and adding ''§ 51.303'', effective Aug. 30, 1999.

§ 51.304 Identification of integral vistas.

(a) On or before December 31, 1985 the Federal Land Manager may identify any integral vista. The integral vista

must be identified according to criteria the Federal Land Manager develops. These criteria must include, but are not limited to, whether the integral vista is important to the visitor's visual experience of the mandatory Class I Federal area. Adoption of criteria must be preceded by reasonable notice and opportunity for public comment on the proposed criteria.

(b) The Federal Land Manager must notify the State of any integral vistas identified under paragraph (a) of this section, and the reasons therefor.

(c) The State must list in its implementation plan any integral vista the Federal Land Manager identifies at least six months prior to plan submission, and must list in its implementation plan at its earliest opportunity, and in no case later than at the time of the periodic review of the SIP required by § 51.306(c), any integral vista the Federal Land Manager identifies after that time.

(d) The State need not in its implementation plan list any integral vista the indentification of which was not made in accordance with the criteria in paragraph (a) of this section. In making this finding, the State must carefully consider the expertise of the Federal Land Manager in making the judgments called for by the criteria for identification. Where the State and the Federal Land Manager disagree on the identification of any integral vista, the State must give the Federal Land Manager an opportunity to consult with the Governor of the State.

[45 FR 80089, Dec. 2, 1980, as amended by 64 FR 35774, July 1, 1999]

EFFECTIVE DATE NOTE: At 64 FR 35774, July 1, 1999, § 51.304 was amended in paragraph (c) by removing ''Section 306(c)'' and adding ''§ 51.306(c)'', effective Aug. 30, 1999.

§ 51.305 Monitoring for reasonably attributable visibility impairment.

(a) For the purposes of addressing reasonably attributable visibility impairment, each State containing a mandatory Class I Federal area must include in the plan a strategy for evaluating reasonably attributable visibility impairment in any mandatory Class I Federal area by visual observation or other appropriate monitoring techniques. Such strategy must take into account current and anticipated visibility monitoring research, the availability of appropriate monitoring techniques, and such guidance as is provided by the Agency.

(b) The plan must provide for the consideration of available visibility data and must provide a mechanism for its use in decisions required by this subpart.

[45 FR 80089, Dec. 2, 1980, as amended at 64 FR 35764, July 1, 1999]

EFFECTIVE DATE NOTE: At 64 FR 35764, July 1, 1999, § 31.305 was amended by revising the section heading and paragraph (a), effective Aug. 30, 1999. For the convenience of the user, the superseded text follows:

§ 51.305 Monitoring.

(a) The State must include in the plan a strategy for evaluating visibility in any mandatory Class I Federal area by visual observation or other appropriate monitoring techniques. Such strategy must take into account current and anticipated visibility monitoring research, the availability of appropriate monitoring techniques, and such guidance as is provided by the Agency.

* * * * *

§ 51.306 Long-term strategy requirements for reasonably attributable visibility impairment.

(a)(1) For the purposes of addressing reasonably attributable visibility impairment, each plan must include a long-term (10–15 years) strategy for making reasonable progress toward the national goal specified in § 51.300(a). This strategy must cover any existing impairment the Federal Land Manager certifies to the State at least 6 months prior to plan submission, and any integral vista of which the Federal Land Manager notifies the State at least 6 months prior to plan submission.

(2) A long-term strategy must be developed for each mandatory Class I Federal area located within the State and each mandatory Class I Federal area located outside the State which may be affected by sources within the State. This does not preclude the development of a single comprehensive plan for all such areas.

(3) The plan must set forth with reasonable specificity why the long-term strategy is adequate for making reasonable progress toward the national

visibility goal, including remedying existing and preventing future impairment.

(b) The State must coordinate its long-term strategy for an area with existing plans and goals, including those provided by the affected Federal Land Managers, that may affect impairment of visibility in any mandatory Class I Federal area.

(c) The plan must provide for periodic review and revision, as appropriate, of the long-term strategy for addressing reasonably attributable visibility impairment. The plan must provide for such periodic review and revision not less frequently than every 3 years until the date of submission of the State's first plan addressing regional haze visibility impairment in accordance with § 51.308(b) and (c). On or before this date, the State must revise its plan to provide for review and revision of a coordinated long-term strategy for addressing reasonably attributable and regional haze visibility impairment, and the State must submit the first such coordinated long-term strategy. Future coordinated long-term strategies must be submitted consistent with the schedule for periodic progress reports set forth in § 51.308(g). Until the State revises its plan to meet this requirement, the State must continue to comply with existing requirements for plan review and revision, and with all emission management requirements in the plan to address reasonably attributable impairment. This requirement does not affect any preexisting deadlines for State submittal of a long-term strategy review (or element thereof) between August 30, 1999, and the date required for submission of the State's first regional haze plan. In addition, the plan must provide for review of the long-term strategy as it applies to reasonably attributable impairment, and revision as appropriate, within 3 years of State receipt of any certification of reasonably attributable impairment from a Federal Land Manager. The review process must include consultation with the appropriate Federal Land Managers, and the State must provide a report to the public and the Administrator on progress toward the national goal. This report must include an assessment of:

(1) The progress achieved in remedying existing impairment of visibility in any mandatory Class I Federal area;

(2) The ability of the long-term strategy to prevent future impairment of visibility in any mandatory Class I Federal area;

(3) Any change in visibility since the last such report, or, in the case of the first report, since plan approval;

(4) Additional measures, including the need for SIP revisions, that may be necessary to assure reasonable progress toward the national visibility goal;

(5) The progress achieved in implementing BART and meeting other schedules set forth in the long-term strategy;

(6) The impact of any exemption granted under § 51.303;

(7) The need for BART to remedy existing visibility impairment of any integral vista listed in the plan since the last such report, or, in the case of the first report, since plan approval.

(d) The long-term strategy must provide for review of the impacts from any new major stationary source or major modifications on visibility in any mandatory Class I Federal area. This review of major stationary sources or major modifications must be in accordance with § 51.307, § 51.166, § 51.160, and any other binding guidance provided by the Agency insofar as these provisions pertain to protection of visibility in any mandatory Class I Federal areas.

(e) The State must consider, at a minimum, the following factors during the development of its long-term strategy:

(1) Emission reductions due to ongoing air pollution control programs,

(2) Additional emission limitations and schedules for compliance,

(3) Measures to mitigate the impacts of construction activities,

(4) Source retirement and replacement schedules,

(5) Smoke management techniques for agricultural and forestry management purposes including such plans as currently exist within the State for these purposes, and

(6) Enforceability of emission limitations and control measures.

(f) The plan must discuss the reasons why the above and other reasonable measures considered in the development of the long-term strategy were or were not adopted as part of the long-term strategy.

(g) The State, in developing the long-term strategy, must take into account the effect of new sources, and the costs of compliance, the time necessary for compliance, the energy and nonair quality environmental impacts of compliance, and the remaining useful life of any affected existing source and equipment therein.

[45 FR 80089, Dec. 2, 1980, as amended at 64 FR 35764, 35774, July 1, 1999]

EFFECTIVE DATE NOTE: At 64 FR 35764, 35774, July 1, 1999, § 51.306 was amended in paragraph (a)(1) by removing ''Section 300(a)'' and adding ''§ 51.300(a)'' and paragraph (c)(6) was amended by removing ''Section 303'' and adding ''§ 51.303'', and by revising the section heading, paragraph (a)(1), paragraph (c) introductory text, and paragraph (d), effective Aug. 30, 1999. For the convenience of the user, the superseded text follows:

§ 51.306 Long-term strategy.

(a)(1) Each plan must include a long-term (10–15 years) strategy for making reasonable progress toward the national goal specified in section 300(a). This strategy must cover any existing impairment the Federal Land Manager certifies to the State at least 6 months prior to plan submission, and any integral vista of which the Federal Land Manager notifies the State at least 6 months prior to plan submission.

* * * * *

(c) The plan must provide for periodic review and revision, as appropriate, of the long-term strategy not less frequent than every three years. This review process must include consultation with the appropriate Federal Land Managers, and the State must provide a report to the public and the Administrator on progress toward the national goal. This report must include an assessment of:

* * * * *

(d) The long-term strategy must provide for review of the impacts from any new major stationary source or major modifications on visibility in any mandatory Class I Federal area. This review of major stationary sources or major modifications must be in accordance with section 307, § 51.24, § 51.18 and any other binding guidance provided by the Agency insofar as these provisions pertain to protection of visibility in any mandatory Class I Federal areas.

* * * * *

§ 51.307 New source review.

(a) For purposes of new source review of any new major stationary source or major modification that would be constructed in an area that is designated attainment or unclassified under section 107(d)(1)(D) or (E) of the CAA, the State plan must, in any review under § 51.166 with respect to visibility protection and analyses, provide for:

(1) Written notification of all affected Federal Land Managers of any proposed new major stationary source or major modification that may affect visibility in any Federal Class I area. Such notification must be made in writing and include a copy of all information relevant to the permit application within 30 days of receipt of and at least 60 days prior to public hearing by the State on the application for permit to construct. Such notification must include an analysis of the anticipated impacts on visibility in any Federal Class I area,

(2) Where the State requires or receives advance notification (e.g. early consultation with the source prior to submission of the application or notification of intent to monitor under § 51.166) of a permit application of a source that may affect visibility the State must notify all affected Federal Land Managers within 30 days of such advance notification, and

(3) Consideration of any analysis performed by the Federal Land Manager, provided within 30 days of the notification and analysis required by paragraph (a)(1) of this section, that such proposed new major stationary source or major modification may have an adverse impact on visibility in any Federal Class I area. Where the State finds that such an analysis does not demonstrate to the satisfaction of the State that an adverse impact will result in the Federal Class I area, the State must, in the notice of public hearing, either explain its decision or give notice as to where the explanation can be obtained.

(b) The plan shall also provide for the review of any new major stationary source or major modification:

(1) That may have an impact on any integral vista of a mandatory Class I Federal area, if it is identified in accordance with § 51.304 by the Federal Land Manager at least 12 months before submission of a complete permit application, except where the Federal Land Manager has provided notice and opportunity for public comment on the integral vista in which case the review must include impacts on any integral vista identified at least 6 months prior to submission of a complete permit application, unless the State determines under § 51.304(d) that the identification was not in accordance with the identification criteria, or

(2) That proposes to locate in an area classified as nonattainment under section 107(d)(1)(A), (B), or (C) of the Clean Air Act that may have an impact on visibility in any mandatory Class I Federal area.

(c) Review of any major stationary source or major modification under paragraph (b) of this section, shall be conducted in accordance with paragraph (a) of this section, and § 51.166(o), (p)(1) through (2), and (q). In conducting such reviews the State must ensure that the source's emissions will be consistent with making reasonable progress toward the national visibility goal referred to in § 51.300(a). The State may take into account the costs of compliance, the time necessary for compliance, the energy and nonair quality environmental impacts of compliance, and the useful life of the source.

(d) The State may require monitoring of visibility in any Federal Class I area near the proposed new stationary source or major modification for such purposes and by such means as the State deems necessary and appropriate.

[45 FR 80089, Dec. 2, 1980, as amended at 64 FR 35765, 35774, July 1, 1999]

EFFECTIVE DATE NOTE: At 64 FR 35765, 35774, July 1, 1999, § 51.307 was amended in paragraph (b)(1) by removing ''Section 304'' and ''Section 304(d)'' and adding ''§ 51.304'' and ''§ 51.304(d)'' respectively; and paragraph (c) was amended by removing ''Section 300(a)'' and adding ''§ 51.303(a)''; and revising paragraph (a) introductory text, (a)(2), and (c), effective Aug. 30, 1999. For the convenience of the user, the superseded text is set out as follows:

§ 51.307 New source review.

(a) For purposes of new source review of any new major stationary source or major modification that would be constructed in an area that is designated attainment or unclassified under section 107(d)(1)(D) or (E) of the Clean Air Act, the State plan must, in any review under § 51.24 with respect to visibility protection and analyses, provide for:

* * * * *

(2) Where the State requires or receives advance notification (e.g. early consultation with the source prior to submission of the application or notification of intent to monitor under § 51.24) of a permit application of a source that may affect visibility the State must notify all affected Federal Land Managers within 30 days of such advance notification, and

* * * * *

(c) Review of any major stationary source or major modification under paragraph (b) of this section, shall be conducted in accordance with paragraph (a) of this section, and § 51.24(o), (p) (1) through (2), and (q). In conducting such reviews the State must ensure that the source's emissions will be consistent with making reasonable progress toward the national visibility goal referred to in § 300(a). The State may take into account the costs of compliance, the time necessary for compliance, the energy and nonair quality environmental impacts of compliance, and the useful life of the source.

* * * * *

§ 51.308 Regional haze program requirements.

(a) *What is the purpose of this section?* This section establishes requirements for implementation plans, plan revisions, and periodic progress reviews to address regional haze.

(b) *When are the first implementation plans due under the regional haze program?* Except as provided in paragraph (c) of this section and § 51.309(c), each State identified in § 51.300(b)(3) must submit an implementation plan for regional haze meeting the requirements of paragraphs (d) and (e) of this section by the following dates:

(1) For any area designated as attainment or unclassifiable for the national ambient air quality standard (NAAQS) for fine particulate matter ($PM_{2.5}$), the

State must submit a regional haze implementation plan to EPA within 12 months after the date of designation.

(2) For any area designated as nonattainment for the $PM_{2.5}$ NAAQS, the State must submit a regional haze implementation plan to EPA at the same time that the State's plan for implementation of the $PM_{2.5}$ NAAQS must be submitted under section 172 of the CAA, that is, within 3 years after the area is designated as nonattainment, but not later than December 31, 2008.

(c) *Options for regional planning.* If at the time the SIP for regional haze would otherwise be due, a State is working with other States to develop a coordinated approach to regional haze by participating in a regional planning process, the State may choose to defer addressing the core requirements for regional haze in paragraph (d) of this section and the requirements for BART in paragraph (e) of this section. If a State opts to do this, it must meet the following requirements:

(1) The State must submit an implementation plan by the earliest date by which an implementation plan would be due for any area of the State under paragraph (b) of this section. This implementation plan must contain the following:

(i) A demonstration of ongoing participation in a regional planning process to address regional haze, and an agreement by the State to continue participating with one or more other States in such a process for the development of this and future implementation plan revisions;

(ii) A showing, based on available inventory, monitoring, or modeling information, that emissions from within the State contribute to visibility impairment in a mandatory Class I Federal Area outside the State, or that emissions from another State contribute to visibility impairment in any mandatory Class I Federal area within the State.

(iii) A description of the regional planning process, including a list of the States which have agreed to work together to address regional haze in a region (i.e., the regional planning group), the goals, objectives, management, and decisionmaking structure of the regional planning group, deadlines for completing significant technical analyses and developing emission management strategies, and a schedule for State review and adoption of regulations implementing the recommendations of the regional group;

(iv) A commitment by the State to submit an implementation plan revision addressing the requirements in paragraphs (d) and (e) of this section by the date specified in paragraph (c)(2) of this section. In addition, the State must commit to develop its plan revision in coordination with the other States participating in the regional planning process, and to fully address the recommendations of the regional planning group.

(v) A list of all BART-eligible sources within the State.

(2) The State must submit an implementation plan revision addressing the requirements in paragraphs (d) and (e) of this section by the latest date an area within the planning region would be required to submit an implementation plan under paragraph (b) of this section, but in any event, no later than December 31, 2008.

(d) *What are the core requirements for the implementation plan for regional haze?* The State must address regional haze in each mandatory Class I Federal area located within the State and in each mandatory Class I Federal area located outside the State which may be affected by emissions from within the State. To meet the core requirements for regional haze for these areas, the State must submit an implementation plan containing the following plan elements and supporting documentation for all required analyses:

(1) *Reasonable progress goals.* For each mandatory Class I Federal area located within the State, the State must establish goals (expressed in deciviews) that provide for reasonable progress towards achieving natural visibility conditions. The reasonable progress goals must provide for an improvement in visibility for the most impaired days over the period of the implementation plan and ensure no degradation in visibility for the least impaired days over the same period.

(i) In establishing a reasonable progress goal for any mandatory Class

I Federal area within the State, the State must:

(A) Consider the costs of compliance, the time necessary for compliance, the energy and non-air quality environmental impacts of compliance, and the remaining useful life of any potentially affected sources, and include a demonstration showing how these factors were taken into consideration in selecting the goal.

(B) Analyze and determine the rate of progress needed to attain natural visibility conditions by the year 2064. To calculate this rate of progress, the State must compare baseline visibility conditions to natural visibility conditions in the mandatory Federal Class I area and determine the uniform rate of visibility improvement (measured in deciviews) that would need to be maintained during each implementation period in order to attain natural visibility conditions by 2064. In establishing the reasonable progress goal, the State must consider the uniform rate of improvement in visibility and the emission reduction measures needed to achieve it for the period covered by the implementation plan.

(ii) For the period of the implementation plan, if the State establishes a reasonable progress goal that provides for a slower rate of improvement in visibility than the rate that would be needed to attain natural conditions by 2064, the State must demonstrate, based on the factors in paragraph (d)(1)(i)(A) of this section, that the rate of progress for the implementation plan to attain natural conditions by 2064 is not reasonable; and that the progress goal adopted by the State is reasonable. The State must provide to the public for review as part of its implementation plan an assessment of the number of years it would take to attain natural conditions if visibility improvement continues at the rate of progress selected by the State as reasonable.

(iii) In determining whether the State's goal for visibility improvement provides for reasonable progress towards natural visibility conditions, the Administrator will evaluate the demonstrations developed by the State pursuant to paragraphs (d)(1)(i) and (d)(1)(ii) of this section.

(iv) In developing each reasonable progress goal, the State must consult with those States which may reasonably be anticipated to cause or contribute to visibility impairment in the mandatory Class I Federal area. In any situation in which the State cannot agree with another such State or group of States that a goal provides for reasonable progress, the State must describe in its submittal the actions taken to resolve the disagreement. In reviewing the State's implementation plan submittal, the Administrator will take this information into account in determining whether the State's goal for visibility improvement provides for reasonable progress towards natural visibility conditions.

(v) The reasonable progress goals established by the State are not directly enforceable but will be considered by the Administrator in evaluating the adequacy of the measures in the implementation plan to achieve the progress goal adopted by the State.

(vi) The State may not adopt a reasonable progress goal that represents less visibility improvement than is expected to result from implementation of other requirements of the CAA during the applicable planning period.

(2) *Calculations of baseline and natural visibility conditions.* For each mandatory Class I Federal area located within the State, the State must determine the following visibility conditions (expressed in deciviews):

(i) Baseline visibility conditions for the most impaired and least impaired days. The period for establishing baseline visibility conditions is 2000 to 2004. Baseline visibility conditions must be calculated, using available monitoring data, by establishing the average degree of visibility impairment for the most and least impaired days for each calendar year from 2000 to 2004. The baseline visibility conditions are the average of these annual values. For mandatory Class I Federal areas without onsite monitoring data for 2000–2004, the State must establish baseline values using the most representative available monitoring data for 2000–2004, in consultation with the Administrator or his or her designee;

(ii) For an implementation plan that is submitted by 2003, the period for establishing baseline visibility conditions for the period of the first long-term strategy is the most recent 5-year period for which visibility monitoring data are available for the mandatory Class I Federal areas addressed by the plan. For mandatory Class I Federal areas without onsite monitoring data, the State must establish baseline values using the most representative available monitoring data, in consultation with the Administrator or his or her designee;

(iii) Natural visibility conditions for the most impaired and least impaired days. Natural visibility conditions must be calculated by estimating the degree of visibility impairment existing under natural conditions for the most impaired and least impaired days, based on available monitoring information and appropriate data analysis techniques; and

(iv)(A) For the first implementation plan addressing the requirements of paragraphs (d) and (e) of this section, the number of deciviews by which baseline conditions exceed natural visibility conditions for the most impaired and least impaired days; or

(B) For all future implementation plan revisions, the number of deciviews by which current conditions, as calculated under paragraph (f)(1) of this section, exceed natural visibility conditions for the most impaired and least impaired days.

(3) *Long-term strategy for regional haze.* Each State listed in §51.300(b)(3) must submit a long-term strategy that addresses regional haze visibility impairment for each mandatory Class I Federal area within the State and for each mandatory Class I Federal area located outside the State which may be affected by emissions from the State. The long-term strategy must include enforceable emissions limitations, compliance schedules, and other measures as necessary to achieve the reasonable progress goals established by States having mandatory Class I Federal areas. In establishing its long-term strategy for regional haze, the State must meet the following requirements:

(i) Where the State has emissions that are reasonably anticipated to contribute to visibility impairment in any mandatory Class I Federal area located in another State or States, the State must consult with the other State(s) in order to develop coordinated emission management strategies. The State must consult with any other State having emissions that are reasonably anticipated to contribute to visibility impairment in any mandatory Class I Federal area within the State.

(ii) Where other States cause or contribute to impairment in a mandatory Class I Federal area, the State must demonstrate that it has included in its implementation plan all measures necessary to obtain its share of the emission reductions needed to meet the progress goal for the area. If the State has participated in a regional planning process, the State must ensure it has included all measures needed to achieve its apportionment of emission reduction obligations agreed upon through that process.

(iii) The State must document the technical basis, including modeling, monitoring and emissions information, on which the State is relying to determine its apportionment of emission reduction obligations necessary for achieving reasonable progress in each mandatory Class I Federal area it affects. The State may meet this requirement by relying on technical analyses developed by the regional planning organization and approved by all State participants. The State must identify the baseline emissions inventory on which its strategies are based. The baseline emissions inventory year is presumed to be the most recent year of the consolidate periodic emissions inventory.

(iv) The State must identify all anthropogenic sources of visibility impairment considered by the State in developing its long-term strategy. The State should consider major and minor stationary sources, mobile sources, and area sources.

(v) The State must consider, at a minimum, the following factors in developing its long-term strategy:

(A) Emission reductions due to ongoing air pollution control programs, including measures to address reasonably attributable visibility impairment;

(B) Measures to mitigate the impacts of construction activities;

(C) Emissions limitations and schedules for compliance to achieve the reasonable progress goal;

(D) Source retirement and replacement schedules;

(E) Smoke management techniques for agricultural and forestry management purposes including plans as currently exist within the State for these purposes;

(F) Enforceability of emissions limitations and control measures; and

(G) The anticipated net effect on visibility due to projected changes in point, area, and mobile source emissions over the period addressed by the long-term strategy.

(4) *Monitoring strategy and other implementation plan requirements.* The State must submit with the implementation plan a monitoring strategy for measuring, characterizing, and reporting of regional haze visibility impairment that is representative of all mandatory Class I Federal areas within the State. This monitoring strategy must be coordinated with the monitoring strategy required in §51.305 for reasonably attributable visibility impairment. Compliance with this requirement may be met through participation in the Interagency Monitoring of Protected Visual Environments network. The implementation plan must also provide for the following:

(i) The establishment of any additional monitoring sites or equipment needed to assess whether reasonable progress goals to address regional haze for all mandatory Class I Federal areas within the State are being achieved.

(ii) Procedures by which monitoring data and other information are used in determining the contribution of emissions from within the State to regional haze visibility impairment at mandatory Class I Federal areas both within and outside the State.

(iii) For a State with no mandatory Class I Federal areas, procedures by which monitoring data and other information are used in determining the contribution of emissions from within the State to regional haze visibility impairment at mandatory Class I Federal areas in other States.

(iv) The implementation plan must provide for the reporting of all visibility monitoring data to the Administrator at least annually for each mandatory Class I Federal area in the State. To the extent possible, the State should report visibility monitoring data electronically.

(v) A statewide inventory of emissions of pollutants that are reasonably anticipated to cause or contribute to visibility impairment in any mandatory Class I Federal area. The inventory must include emissions for a baseline year, emissions for the most recent year for which data are available, and estimates of future projected emissions. The State must also include a commitment to update the inventory periodically.

(vi) Other elements, including reporting, recordkeeping, and other measures, necessary to assess and report on visibility.

(e) *Best Available Retrofit Technology (BART) requirements for regional haze visibility impairment.* The State must submit an implementation plan containing emission limitations representing BART and schedules for compliance with BART for each BART-eligible source that may reasonably be anticipated to cause or contribute to any impairment of visibility in any mandatory Class I Federal area, unless the State demonstrates that an emissions trading program or other alternative will achieve greater reasonable progress toward natural visibility conditions.

(1) To address the requirements for BART, the State must submit an implementation plan containing the following plan elements and include documentation for all required analyses:

(i) A list of all BART-eligible sources within the State.

(ii) A determination of BART for each BART-eligible source in the State that emits any air pollutant which may reasonably be anticipated to cause or contribute to any impairment of visibility in any mandatory Class I Federal area. All such sources are subject to BART. This determination must be based on the following analyses:

(A) An analysis of the best system of continuous emission control technology available and associated emission reductions achievable for each BART-eligible source within the State subject to BART. In this analysis, the State must take into consideration the technology available, the costs of compliance, the energy and nonair quality environmental impacts of compliance, any pollution control equipment in use at the source, and the remaining useful life of the source; and

(B) An analysis of the degree of visibility improvement that would be achieved in each mandatory Class I Federal area as a result of the emission reductions achievable from all sources subject to BART located within the region that contributes to visibility impairment in the Class I area, based on the analysis conducted under paragraph (e)(1)(ii)(A) of this section.

(iii) If the State determines in establishing BART that technological or economic limitations on the applicability of measurement methodology to a particular source would make the imposition of an emission standard infeasible, it may instead prescribe a design, equipment, work practice, or other operational standard, or combination thereof, to require the application of BART. Such standard, to the degree possible, is to set forth the emission reduction to be achieved by implementation of such design, equipment, work practice or operation, and must provide for compliance by means which achieve equivalent results.

(iv) A requirement that each source subject to BART be required to install and operate BART as expeditiously as practicable, but in no event later than 5 years after approval of the implementation plan revision.

(v) A requirement that each source subject to BART maintain the control equipment required by this subpart and establish procedures to ensure such equipment is properly operated and maintained.

(2) A State may opt to implement an emissions trading program or other alternative measure rather than to require sources subject to BART to install, operate, and maintain BART. To do so, the State must demonstrate that this emissions trading program or other alternative measure will achieve greater reasonable progress than would be achieved through the installation and operation of BART. To make this demonstration, the State must submit an implementation plan containing the following plan elements and include documentation for all required analyses:

(i) A demonstration that the emissions trading program or other alternative measure will achieve greater reasonable progress than would have resulted from the installation and operation of BART at all sources subject to BART in the State. This demonstration must be based on the following:

(A) A list of all BART-eligible sources within the State.

(B) An analysis of the best system of continuous emission control technology available and associated emission reductions achievable for each source within the State subject to BART. In this analysis, the State must take into consideration the technology available, the costs of compliance, the energy and nonair quality environmental impacts of compliance, any pollution control equipment in use at the source, and the remaining useful life of the source. The best system of continuous emission control technology and the above factors may be determined on a source category basis. The State may elect to consider both source-specific and category-wide information, as appropriate, in conducting its analysis.

(C) An analysis of the degree of visibility improvement that would be achieved in each mandatory Class I Federal area as a result of the emission reductions achievable from all such sources subject to BART located within the region that contributes to visibility impairment in the Class I area, based on the analysis conducted under paragraph (e)(2)(i)(B) of this section.

(ii) A demonstration that the emissions trading program or alternative measure will apply, at a minimum, to all BART-eligible sources in the State. Those sources having a federally enforceable emission limitation determined by the State and approved by EPA as meeting BART in accordance with §51.302(c) or paragraph (e)(1) of this section do not need to meet the requirements of the emissions trading

program or alternative measure, but may choose to participate if they meet the requirements of the emissions trading program or alternative measure.

(iii) A requirement that all necessary emission reductions take place during the period of the first long-term strategy for regional haze. To meet this requirement, the State must provide a detailed description of the emissions trading program or other alternative measure, including schedules for implementation, the emission reductions required by the program, all necessary administrative and technical procedures for implementing the program, rules for accounting and monitoring emissions, and procedures for enforcement.

(iv) A demonstration that the emission reductions resulting from the emissions trading program or other alternative measure will be surplus to those reductions resulting from measures adopted to meet requirements of the CAA as of the baseline date of the SIP.

(v) At the State's option, a provision that the emissions trading program or other alternative measure may include a geographic enhancement to the program to address the requirement under § 51.302(c) related to BART for reasonably attributable impairment from the pollutants covered under the emissions trading program or other alternative measure.

(3) After a State has met the requirements for BART or implemented emissions trading program or other alternative measure that achieve more reasonable progress than the installation and operation of BART, BART-eligible sources will be subject to the requirements of paragraph (d) of this section in the same manner as other sources.

(4) Any BART-eligible facility subject to the requirement under paragraph (e) of this section to install, operate, and maintain BART may apply to the Administrator for an exemption from that requirement. An application for an exemption will be subject to the requirements of § 51.303 (a)(2) through (h).

(f) *Requirements for comprehensive periodic revisions of implementation plans for regional haze.* Each State identified in § 51.300(b)(3) must revise and submit its regional haze implementation plan revision to EPA by July 31, 2018 and every ten years thereafter. In each plan revision, the State must evaluate and reassess all of the elements required in paragraph (d) of this section, taking into account improvements in monitoring data collection and analysis techniques, control technologies, and other relevant factors. In evaluating and reassessing these elements, the State must address the following:

(1) Current visibility conditions for the most impaired and least impaired days, and actual progress made towards natural conditions during the previous implementation period. The period for calculating current visibility conditions is the most recent five year period preceding the required date of the implementation plan submittal for which data are available. Current visibility conditions must be calculated based on the annual average level of visibility impairment for the most and least impaired days for each of these five years. Current visibility conditions are the average of these annual values.

(2) The effectiveness of the long-term strategy for achieving reasonable progress goals over the prior implementation period(s); and

(3) Affirmation of, or revision to, the reasonable progress goal in accordance with the procedures set forth in paragraph (d)(1) of this section. If the State established a reasonable progress goal for the prior period which provided a slower rate of progress than that needed to attain natural conditions by the year 2064, the State must evaluate and determine the reasonableness, based on the factors in paragraph (d)(1)(i)(A) of this section, of additional measures that could be adopted to achieve the degree of visibility improvement projected by the analysis contained in the first implementation plan described in paragraph (d)(1)(i)(B) of this section.

(g) *Requirements for periodic reports describing progress towards the reasonable progress goals.* Each State identified in § 51.300(b)(3) must submit a report to the Administrator every 5 years evaluating progress towards the reasonable progress goal for each mandatory Class I Federal area located within the State and in each mandatory Class I Federal area located outside the State which

may be affected by emissions from within the State. The first progress report is due 5 years from submittal of the initial implementation plan addressing paragraphs (d) and (e) of this section. The progress reports must be in the form of implementation plan revisions that comply with the procedural requirements of §51.102 and §51.103. Periodic progress reports must contain at a minimum the following elements:

(1) A description of the status of implementation of all measures included in the implementation plan for achieving reasonable progress goals for mandatory Class I Federal areas both within and outside the State.

(2) A summary of the emissions reductions achieved throughout the State through implementation of the measures described in paragraph (g)(1) of this section.

(3) For each mandatory Class I Federal area within the State, the State must assess the following visibility conditions and changes, with values for most impaired and least impaired days expressed in terms of 5-year averages of these annual values.

(i) The current visibility conditions for the most impaired and least impaired days;

(ii) The difference between current visibility conditions for the most impaired and least impaired days and baseline visibility conditions;

(iii) The change in visibility impairment for the most impaired and least impaired days over the past 5 years;

(4) An analysis tracking the change over the past 5 years in emissions of pollutants contributing to visibility impairment from all sources and activities within the State. Emissions changes should be identified by type of source or activity. The analysis must be based on the most recent updated emissions inventory, with estimates projected forward as necessary and appropriate, to account for emissions changes during the applicable 5-year period.

(5) An assessment of any significant changes in anthropogenic emissions within or outside the State that have occurred over the past 5 years that have limited or impeded progress in reducing pollutant emissions and improving visibility.

(6) An assessment of whether the current implementation plan elements and strategies are sufficient to enable the State, or other States with mandatory Federal Class I areas affected by emissions from the State, to meet all established reasonable progress goals.

(7) A review of the State's visibility monitoring strategy and any modifications to the strategy as necessary.

(h) *Determination of the adequacy of existing implementation plan.* At the same time the State is required to submit any 5-year progress report to EPA in accordance with paragraph (g) of this section, the State must also take one of the following actions based upon the information presented in the progress report:

(1) If the State determines that the existing implementation plan requires no further substantive revision at this time in order to achieve established goals for visibility improvement and emissions reductions, the State must provide to the Administrator a negative declaration that further revision of the existing implementation plan is not needed at this time.

(2) If the State determines that the implementation plan is or may be inadequate to ensure reasonable progress due to emissions from sources in another State(s) which participated in a regional planning process, the State must provide notification to the Administrator and to the other State(s) which participated in the regional planning process with the States. The State must also collaborate with the other State(s) through the regional planning process for the purpose of developing additional strategies to address the plan's deficiencies.

(3) Where the State determines that the implementation plan is or may be inadequate to ensure reasonable progress due to emissions from sources in another country, the State shall provide notification, along with available information, to the Administrator.

(4) Where the State determines that the implementation plan is or may be inadequate to ensure reasonable progress due to emissions from sources within the State, the State shall revise

its implementation plan to address the plan's deficiencies within one year.

(i) *What are the requirements for State and Federal Land Manager coordination*?

(1) By November 29, 1999, the State must identify in writing to the Federal Land Managers the title of the official to which the Federal Land Manager of any mandatory Class I Federal area can submit any recommendations on the implementation of this subpart including, but not limited to:

(i) Identification of impairment of visibility in any mandatory Class I Federal area(s); and

(ii) Identification of elements for inclusion in the visibility monitoring strategy required by §51.305 and this section.

(2) The State must provide the Federal Land Manager with an opportunity for consultation, in person and at least 60 days prior to holding any public hearing on an implementation plan (or plan revision) for regional haze required by this subpart. This consultation must include the opportunity for the affected Federal Land Managers to discuss their:

(i) Assessment of impairment of visibility in any mandatory Class I Federal area; and

(ii) Recommendations on the development of the reasonable progress goal and on the development and implementation of strategies to address visibility impairment.

(3) In developing any implementation plan (or plan revision), the State must include a description of how it addressed any comments provided by the Federal Land Managers.

(4) The plan (or plan revision) must provide procedures for continuing consultation between the State and Federal Land Manager on the implementation of the visibility protection program required by this subpart, including development and review of implementation plan revisions and 5-year progress reports, and on the implementation of other programs having the potential to contribute to impairment of visibility in mandatory Class I Federal areas.

[64 FR 35765, July 1, 1999]

EFFECTIVE DATE NOTE: At 64 FR 35765, July 1, 1999, §51.308 was added, effective Aug. 30, 1999.

§51.309 Requirements related to the Grand Canyon Visibility Transport Commission.

(a) *What is the purpose of this section*? This section establishes the requirements for the first regional haze implementation plan to address regional haze visibility impairment in the 16 Class I areas covered by the Grand Canyon Visibility Transport Commission Report. For the years 2003 to 2018, certain States (defined in paragraph (b) of this section as Transport Region States) may choose to implement the Commission's recommendations within the framework of the national regional haze program and applicable requirements of the Act by complying with the provisions of this section, as supplemented by an approvable Annex to the Commission Report as required by paragraph (f) of this section. If a transport region State submits an implementation plan which is approved by EPA as meeting the requirements of this section, it will be deemed to comply with the requirements for reasonable progress for the period from approval of the plan to 2018.

(b) *Definitions.* For the purposes of this section:

(1) *16 Class I areas* means the following mandatory Class I Federal areas on the Colorado Plateau: Grand Canyon National Park, Sycamore Canyon Wilderness, Petrified Forest National Park, Mount Baldy Wilderness, San Pedro Parks Wilderness, Mesa Verde National Park, Weminuche Wilderness, Black Canyon of the Gunnison Wilderness, West Elk Wilderness, Maroon Bells Wilderness, Flat Tops Wilderness, Arches National Park, Canyonlands National Park, Capital Reef National Park, Bryce Canyon National Park, and Zion National Park.

(2) *Transport Region State* means one of the States that is included within the Transport Region addressed by the Grand Canyon Visibility Transport Commission (Arizona, California, Colorado, Idaho, Nevada, New Mexico, Oregon, Utah, and Wyoming).

(3) *Commission Report* means the report of the Grand Canyon Visibility Transport Commission entitled ''Recommendations for Improving Western Vistas,'' dated June 10, 1996.

(4) *Fire* means wildfire, wildland fire (including prescribed natural fire), prescribed fire, and agricultural burning conducted and occurring on Federal, State, and private wildlands and farmlands.

(5) *Milestone* means an average percentage reduction in emissions, expressed in tons per year, for a given year or for a period of up to 5 years ending in that year, compared to a 1990 actual emissions baseline.

(6) *Mobile Source Emission Budget* means the lowest level of VOC, NO_X, SO_2 elemental and organic carbon, and fine particles which are projected to occur in any area within the transport region from which mobile source emissions are determined to contribute significantly to visibility impairment in any of the 16 Class I areas.

(7) *Geographic enhancement* means a method, procedure, or process to allow a broad regional strategy, such as a milestone or backstop market trading program designed to achieve greater reasonable progress than BART for regional haze, to accommodate BART for reasonably attributable impairment.

(c) *Implementation Plan Schedule.* Each Transport Region State may meet the requirements of §51.308(b) through (e) by electing to submit an implementation plan that complies with the requirements of this section. Each Transport Region State must submit an implementation plan addressing regional haze visibility impairment in the 16 Class I areas no later than December 31, 2003. A Transport Region State that elects not to submit an implementation plan that complies with the requirements of this section (or whose plan does not comply with all of the requirements of this section) is subject to the requirements of §51.308 in the same manner and to the same extent as any State not included within the Transport Region.

(d) *Requirements of the first implementation plan for States electing to adopt all of the recommendations of the Commission Report.* Except as provided for in paragraph (e) of this section, each Transport Region State must submit an implementation plan that meets the following requirements:

(1) *Time period covered.* The implementation plan must be effective for the entire time period between December 31, 2003 and December 31, 2018.

(2) *Projection of visibility improvement.* For each of the 16 mandatory Class I areas located within the Transport Region State, the plan must include a projection of the improvement in visibility conditions (expressed in deciviews, and in any additional ambient visibility metrics deemed appropriate by the State) expected through the year 2018 for the most impaired and least impaired days, based on the implementation of all measures as required in the Commission report and the provisions in this section. The projection must be made in consultation with other Transport Region States with sources which may be reasonably anticipated to contribute to visibility impairment in the relevant Class I area. The projection may be based on a satisfactory regional analysis.

(3) *Treatment of clean-air corridors.* The plan must describe and provide for implementation of comprehensive emission tracking strategies for clean-air corridors to ensure that the visibility does not degrade on the least-impaired days at any of the 16 Class I areas. The strategy must include:

(i) An identification of clean-air corridors. The EPA will evaluate the State's identification of such corridors based upon the reports of the Commission's Meteorology Subcommittee and any future updates by a successor organization;

(ii) Within areas that are clean-air corridors, an identification of patterns of growth or specific sites of growth that could cause, or are causing, significant emissions increases that could have, or are having, visibility impairment at one or more of the 16 Class I areas.

(iii) In areas outside of clean-air corridors, an identification of significant emissions growth that could begin, or is beginning, to impair the quality of air in the corridor and thereby lead to visibility degradation for the least-impaired days in one or more of the 16 Class I areas.

(iv) If impairment of air quality in clean air corridors is identified pursuant to paragraphs (d)(3)(ii) and (iii) of this section, an analysis of the effects

of increased emissions, including provisions for the identification of the need for additional emission reductions measures, and implementation of the additional measures where necessary.

(v) A determination of whether other clean air corridors exist for any of the 16 Class I areas. For any such clean air corridors, an identification of the necessary measures to protect against future degradation of air quality in any of the 16 Class I areas.

(4) *Implementation of stationary source reductions.* The first implementation plan submission must include:

(i) Monitoring and reporting of sulfur dioxide emissions. The plan submission must include provisions requiring the monitoring and reporting of actual stationary source sulfur dioxide emissions within the State. The monitoring and reporting data must be sufficient to determine whether a 13 percent reduction in actual stationary source sulfur dioxide emissions has occurred between the years 1990 and 2000, and whether milestones required by paragraph (f)(1)(i) of this section have been achieved for the transport region. The plan submission must provide for reporting of these data by the State to the Administrator. Where procedures developed under paragraph (f)(1)(ii) of this section and agreed upon by the State include reporting to a regional planning organization, the plan submission must provide for reporting to the regional planning body in addition to the Administrator.

(ii) Criteria and procedures for a market trading program. The plan must include the criteria and procedures for activating a market trading program or other program consistent with paragraph (f)(1)(i) of this section if an applicable regional milestone is exceeded, procedures for operation of the program, and implementation plan assessments and provisions for implementation plan assessments of the program in the years 2008, 2013, and 2018.

(iii) Provisions for activating a market trading program. Provisions to activate the market trading program or other program within 12 months after the emissions for the region are determined to exceed the applicable emission reduction milestone, and to assure that all affected sources are in compliance with allocation and other requirements within 5 years after the emissions for the region are determined to exceed the applicable emission reduction milestone.

(iv) Provisions for market trading program compliance reporting. If the market trading program has been activated, the plan submission must include provisions requiring the State to provide annual reports assuring that all sources are in compliance with applicable requirements of the market trading program.

(v) Provisions for stationary source NO_X and PM. The plan submission must include a report which assesses emissions control strategies for stationary source NO_X and PM, and the degree of visibility improvement that would result from such strategies. In the report, the State must evaluate and discuss the need to establish emission milestones for NO_X and PM to avoid any net increase in these pollutants from stationary sources within the transport region, and to support potential future development and implementation of a multipollutant and possibly multisource market-based program. The plan submission must provide for an implementation plan revision, containing any necessary long-term strategies and BART requirements for stationary source PM and NO_X (including enforceable limitations, compliance schedules, and other measures) by no later than December 31, 2008.

(5) *Mobile sources.* The plan submission must provide for:

(i) Statewide inventories of current annual emissions and projected future annual emissions of VO_c, NO_X, SO_2, elemental carbon, organic carbon, and fine particles from mobile sources for the years 2003 to 2018. The future year inventories must include projections for the year 2005, or an alternative year that is determined by the State to represent the year during which mobile source emissions will be at their lowest levels within the State.

(ii) A determination whether mobile source emissions in any areas of the State contribute significantly to visibility impairment in any of the 16 Class I Areas, based on the statewide

inventory of current and projected mobile source emissions.

(iii) For States with areas in which mobile source emissions are found to contribute significantly to visibility impairment in any of the 16 Class I areas:

(A) The establishment and documentation of a mobile source emissions budget for any such area, including provisions requiring the State to restrict the annual VOC, NO_X, SO_2, elemental and organic carbon, and/or fine particle mobile source emissions to their projected lowest levels, to implement measures to achieve the budget or cap, and to demonstrate compliance with the budget.

(B) An emission tracking system providing for reporting of annual mobile source emissions from the State in the periodic implementation plan revisions required by paragraph (d)(10) of this section. The emission tracking system must be sufficient to determine the States' contribution toward the Commission's objective of reducing emissions from mobile sources by 2005 or an alternate year that is determined by the State to represent the year during which mobile source emissions will be at their lowest levels within the State, and to ensure that mobile source emissions do not increase thereafter.

(iv) Interim reports to EPA and the public in years 2003, 2008, 2013, and 2018 on the implementation status of the regional and local strategies recommended by the Commission Report to address mobile source emissions.

(6) *Programs related to fire.* The plan must provide for:

(i) Documentation that all Federal, State, and private prescribed fire programs within the State evaluate and address the degree visibility impairment from smoke in their planning and application. In addition the plan must include smoke management programs that include all necessary components including, but not limited to, actions to minimize emissions, evaluation of smoke dispersion, alternatives to fire, public notification, air quality monitoring, surveillance and enforcement, and program evaluation.

(ii) A statewide inventory and emissions tracking system (spatial and temporal) of VOC, NO_X, elemental and organic carbon, and fine particle emissions from fire. In reporting and tracking emissions from fire from within the State, States may use information from regional data-gathering and tracking initiatives.

(iii) Identification and removal wherever feasible of any administrative barriers to the use of alternatives to burning in Federal, State, and private prescribed fire programs within the State.

(iv) Enhanced smoke management programs for fire that consider visibility effects, not only health and nuisance objectives, and that are based on the criteria of efficiency, economics, law, emission reduction opportunities, land management objectives, and reduction of visibility impact.

(v) Establishment of annual emission goals for fire, excluding wildfire, that will minimize emission increases from fire to the maximum extent feasible and that are established in cooperation with States, tribes, Federal land management agencies, and private entities.

(7) *Area sources of dust emissions from paved and unpaved roads.* The plan must include an assessment of the impact of dust emissions from paved and unpaved roads on visibility conditions in the 16 Class I Areas. If such dust emissions are determined to be a significant contributor to visibility impairment in the 16 Class I areas, the State must implement emissions management strategies to address the impact as necessary and appropriate.

(8) *Pollution prevention.* The plan must provide for:

(i) An initial summary of all pollution prevention programs currently in place, an inventory of all renewable energy generation capacity and production in use, or planned as of the year 2002 (expressed in megawatts and megawatt-hours), the total energy generation capacity and production for the State, the percent of the total that is renewable energy, and the State's anticipated contribution toward the renewable energy goals for 2005 and 2015, as provided in paragraph (d)(8)(vi) of this section.

(ii) Programs to provide incentives that reward efforts that go beyond compliance and/or achieve early compliance with air-pollution related requirements.

(iii) Programs to preserve and expand energy conservation efforts.

(iv) The identification of specific areas where renewable energy has the potential to supply power where it is now lacking and where renewable energy is most cost-effective.

(v) Projections of the short- and long-term emissions reductions, visibility improvements, cost savings, and secondary benefits associated with the renewable energy goals, energy efficiency and pollution prevention activities.

(vi) A description of the programs relied on to achieve the State's contribution toward the Commission's goal that renewable energy will comprise 10 percent of the regional power needs by 2005 and 20 percent by 2015, and a demonstration of the progress toward achievement of the renewable energy goals in the years 2003, 2008, 2013, and 2018. This description must include documentation of the potential for renewable energy resources, the percentage of renewable energy associated with new power generation projects implemented or planned, and the renewable energy generation capacity and production in use and planned in the State. To the extent that it is not feasible for a State to meet its contribution to the regional renewable energy goals, the State must identify in the progress reports the measures implemented to achieve its contribution and explain why meeting the State's contribution was not feasible.

(9) *Implementation of additional recommendations.* The plan must provide for implementation of all other recommendations in the Commission report that can be practicably included as enforceable emission limits, schedules of compliance, or other enforceable measures (including economic incentives) to make reasonable progress toward remedying existing and preventing future regional haze in the 16 Class I areas. The State must provide a report to EPA and the public in 2003, 2008, 2013, and 2018 on the progress toward developing and implementing policy or strategy options recommended in the Commission Report.

(10) *Periodic implementation plan revisions.* Each Transport Region State must submit to the Administrator periodic reports in the years 2008, 2013, and 2018. The progress reports must be in the form of implementation plan revisions that comply with the procedural requirements of § 51.102 and § 51.103.

(i) The report will assess the area for reasonable progress as provided in this section for mandatory Class I Federal area(s) located within the State and for mandatory Class I Federal area(s) located outside the State which may be affected by emissions from within the State. This demonstration may be based on assessments conducted by the States and/or a regional planning body. The progress reports must contain at a minimum the following elements:

(A) A description of the status of implementation of all measures included in the implementation plan for achieving reasonable progress goals for mandatory Class I Federal areas both within and outside the State.

(B) A summary of the emissions reductions achieved throughout the State through implementation of the measures described in paragraph (d)(10)(i)(A) of this section.

(C) For each mandatory Class I Federal area within the State, an assessment of the following: the current visibility conditions for the most impaired and least impaired days; the difference between current visibility conditions for the most impaired and least impaired days and baseline visibility conditions; the change in visibility impairment for the most impaired and least impaired days over the past 5 years.

(D) An analysis tracking the change over the past 5 years in emissions of pollutants contributing to visibility impairment from all sources and activities within the State. Emissions changes should be identified by type of source or activity. The analysis must be based on the most recent updated emissions inventory, with estimates projected forward as necessary and appropriate, to account for emissions changes during the applicable 5-year period.

(E) An assessment of any significant changes in anthropogenic emissions within or outside the State that have occurred over the past 5 years that have limited or impeded progress in reducing pollutant emissions and improving visibility.

(F) An assessment of whether the current implementation plan elements and strategies are sufficient to enable the State, or other States with mandatory Federal Class I areas affected by emissions from the State, to meet all established reasonable progress goals.

(G) A review of the State's visibility monitoring strategy and any modifications to the strategy as necessary.

(ii) At the same time the State is required to submit any 5-year progress report to EPA in accordance with paragaph (d)(10)(i) of this section, the State must also take one of the following actions based upon the information presented in the progress report:

(A) If the State determines that the existing implementation plan requires no further substantive revision at this time in order to achieve established goals for visibility improvement and emissions reductions, the State must provide to the Administrator a negative declaration that further revision of the existing implementation plan is not needed at this time.

(B) If the State determines that the implementation plan is or may be inadequate to ensure reasonable progress due to emissions from sources in another State(s) which participated in a regional planning process, the State must provide notification to the Administrator and to the other State(s) which participated in the regional planning process with the States. The State must also collaborate with the other State(s) through the regional planning process for the purpose of developing additional strategies to address the plan's deficiencies.

(C) Where the State determines that the implementation plan is or may be inadequate to ensure reasonable progress due to emissions from sources in another country, the State shall provide notification, along with available information, to the Administrator.

(D) Where the State determines that the implementation plan is or may be inadequate to ensure reasonable progress due to emissions from within the State, the State shall develop additional strategies to address the plan deficiencies and revise the implementation plan no later than one year from the date that the progress report was due.

(11) *State planning and interstate coordination.* In complying with the requirements of this section, States may include emission reductions strategies that are based on coordinated implementation with other States. Examples of these strategies include economic incentive programs and transboundary emissions trading programs. The implementation plan must include documentation of the technical and policy basis for the individual State apportionment (or the procedures for apportionment throughout the trans-boundary region), the contribution addressed by the State's plan, how it coordinates with other State plans, and compliance with any other appropriate implementation plan approvability criteria. States may rely on the relevant technical, policy and other analyses developed by a regional entity (such as the Western Regional Air Partnership) in providing such documentation. Conversely, States may elect to develop their own programs without relying on work products from a regional entity.

(12) *Tribal implementation.* Consistent with 40 CFR Part 49, tribes within the Transport Region may implement the required visibility programs for the 16 Class I areas, in the same manner as States, regardless of whether such tribes have participated as members of a visibility transport commission.

(e) *States electing not to implement the commission recommendations.* Any Transport Region State may elect not to implement the Commission recommendations set forth in paragraph (d) of this section. Such States are required to comply with the timelines and requirements of §51.308. Any Transport Region State electing not to implement the Commission recommendations must advise the other States in the Transport Region of the nature of the program and the effect of the program on visibility-impairing emissions, so that other States can take this information into account in developing programs under this section.

(f) *Annex to the Commission Report.* (1) A Transport Region State may choose to comply with the provisions of this section and by doing so shall satisfy the requirements of §51.308(b) through

(e) only if the Grand Canyon Visibility Transport Commission (or a regional planning body formed to implement the Commission recommendations) submits a satisfactory annex to the Commission Report no later than October 1, 2000. To be satisfactory, the Annex must contain the following elements:

(i) The annex must contain quantitative emission reduction milestones for stationary source sulfur dioxide emissions for the reporting years 2003, 2008, 2013 and 2018. The milestones must provide for steady and continuing emission reductions for the 2003–2018 time period consistent with the Commission's definition of reasonable progress, its goal of 50 to 70 percent reduction in sulfur dioxide emissions from 1990 actual emission levels by 2040, applicable requirements under the CAA, and the timing of implementation plan assessments of progress and identification of deficiencies which will be due in the years 2008, 2013, and 2018. The emission reduction milestones must be shown to provide for greater reasonable progress than would be achieved by application of best available retrofit technology (BART) pursuant to §51.308(e)(2) and would be approvable in lieu of BART.

(ii) The annex must contain documentation of the market trading program or other programs to be implemented pursuant to paragraph (d)(4) of this section if current programs and voluntary measures are not sufficient to meet the required emission reduction milestones. This documentation must include model rules, memoranda of understanding, and other documentation describing in detail how emission reduction progress will be monitored, what conditions will require the market trading program to be activated, how allocations will be performed, and how the program will operate.

(2) The Commission may elect, at the same time it submits the annex, to make recommendations intended to demonstrate reasonable progress for other mandatory Class I areas (beyond the original 16) within the Transport Region States, including the technical and policy justification for these additional mandatory Class I Federal areas in accordance with the provisions of paragraph (g) of this section.

(3) The EPA will publish the annex upon receipt. If EPA finds that the annex meets the requirements of paragraph (f)(1) of this section and assures reasonable progress, then, after public notice and comment, will amend the requirements of paragraph (d)(4) of this section to incorporate the provisions of the annex within 1 year after EPA receives the annex. If EPA finds that the annex does not meet the requirements of paragraph (f)(1) of this section, or does not assure reasonable progress, or if EPA finds that the annex is not received, then each Transport Region State must submit an implementation plan for regional haze meeting all of the requirements of §51.308.

(4) In accordance with the provisions under paragraph (f)(1) of this section, the annex may include a geographic enhancement to the program provided for in paragraph (d)(4) of this section to address the requirement under §51.302(c) related to Best Available Retrofit Technology for reasonably attributable impairment from the pollutants covered by the milestones or the backstop market trading program. The geographic enhancement program may include an appropriate level of reasonably attributable impairment which may require additional emission reductions over and above those achieved under the milestones defines in paragraph (f)(1)(i) of this section.

(g) *Additional Class I areas.* The following submittals must be made by Transport Region States implementing the provisions of this section as the basis for demonstrating reasonable progress for additional Class I areas in the Transport Region States. If a Transport Region State submits an implementation plan which is approved by EPA as meeting the requirements of this section, it will be deemed to comply with the requirements for reasonable progress for the period from approval of the plan to 2018.

(1) In the plan submitted for the 16 Class I areas no later than December 31, 2003, a declaration indicating whether other Class I areas will be addressed under §51.308 or paragraphs (g)(2) and (3) of this section.

(2) In a plan submitted no later than December 31, 2008, provide a demonstration of expected visibility conditions for the most impaired and least impaired days at the additional mandatory Class I Federal area(s) based on emissions projections from the long-term strategies in the implementation plan. This demonstration may be based on assessments conducted by the States and/or a regional planning body.

(3) In a plan submitted no later than December 31, 2008, provide revisions to the plan submitted under paragraph (c) of this section, including provisions to establish reasonable progress goals and implement any additional measures necessary to demonstrate reasonable progress for the additional mandatory Federal Class I areas. These revisions must comply with the provisions of §51.308(d)(1) through (4).

(4) The following provisions apply for Transport Region States establishing reasonable progress goals and adopting any additional measures for Class I areas other than the 16 Class I areas under paragraphs (g)(2) and (3) of this section.

(i) In developing long-term strategies pursuant to §51.308(d)(3), the State may build upon the strategies implemented under paragraph (d) of this section, and take full credit for the visibility improvement achieved through these strategies.

(ii) The requirement under §51.308(e) related to Best Available Retrofit Technology for regional haze is deemed to be satisfied for pollutants addressed by the milestones and backstop trading program if, in establishing the emission reductions milestones under paragraph (f) of this section, it is shown that greater reasonable progress will be achieved for these Class I areas than would be achieved through the application of source-specific BART emission limitations under §51.308(e)(1).

(iii) The Transport Region State may consider whether any strategies necessary to achieve the reasonable progress goals required by paragraph (g)(3) of this section are incompatible with the strategies implemented under paragraph (d) of this section to the extent the State adequately demonstrates that the incompatibility is related to the costs of the compliance, the time necessary for compliance, the energy and no air quality environmental impacts of compliance, or the remaining useful life of any existing source subject to such requirements.

[64 FR 35769, July 1, 1999]

EFFECTIVE DATE NOTE: At 64 FR 35769, July 1, 1999, §51.309 was added, effective Aug. 30, 1999.

Subpart Q—Reports

AUTHORITY: Secs. 110, 301(a), 313, 319, Clean Air Act (42 U.S.C. 7410, 7601(a), 7613, 7619).

SOURCE: 44 FR 27569, May 10, 1979, unless otherwise noted.

AIR QUALITY DATA REPORTING

§51.320 Annual air quality data report.

The requirements for reporting air quality data collected for purposes of the plan are located in subpart C of part 58 of this chapter.

SOURCE EMISSIONS AND STATE ACTION REPORTING

§51.321 Annual source emissions and State action report.

On an annual (calendar year) basis beginning with calendar year 1979, the State agency shall report to the Administrator (through the appropriate Regional Office) information as specified in §§51.323 through 51.326. Reports must be submitted by July 1 of each year for data collected and actions which took place during the period January 1 to December 31 of the previous year.

§51.322 Sources subject to emissions reporting.

(a) Point sources subject to the annual emissions reporting requirements of §51.321 are defined as follows:

(1) For particulate matter, PM_{10}, sulfur oxides, VOC and nitrogen oxides, any facility that actually emits a total of 181.4 metric tons (200 tons) per year or more of any one pollutant. For particulate matter emissions, the reporting requirement ends with the reporting of calendar year 1987 emissions. For PM_{10} emissions, the reporting requirement begins with the reporting of calendar year 1988 emissions.

(2) For carbon monoxide, any facility that actually emits a total of 1814 metric tons (2000 tons) per year or more.

(3) For lead or lead compounds measured as elemental lead, any facility that actually emits a total of 4.5 metric tons (5 tons) per year or more.

(b) Annual emissions reporting requirements apply only to emissions of each pollutant from any individual emission point within the facility that emits:

(1) For particulate matter, $PM_{10,}$ sulfur oxides, VOC and nitrogen oxides. 22.7 metric tons (25 tons) per year or more. For particulate matter, the reporting requirement ends with the reporting of calendar year 1987 emissions. For $PM_{10,}$ the reporting requirement begins with the reporting of calendar year 1988 emissions.

(2) For carbon monoxide, 227 metric tons (250 tons) per year or more.

(3) For lead or lead compounds measured as elemental lead, 4.5 metric tons (5 tons) per year or more.

[44 FR 27569, May 10, 1979, as amended at 44 FR 65070, Nov. 9, 1979; 52 FR 24714, July 1, 1987; 64 FR 7462, Feb. 12, 1999]

§ 51.323 Reportable emissions data and information.

(a) The State shall submit in the annual report the following emissions data and information:

(1) Emissions of particulate matter (PM10), sulfur oxides, carbon monoxide, nitrogen oxides, VOC and lead or lead compounds measured as elemental lead as specified by the AIRS Facility Subsystem User's Guide AF2 ''AFS Data Coding'' (EPA–454/B–94–004) point source coding form,

(2) [Reserved]

(3) Emissions of PM 2.5 as will be specified in a future guideline.

(b) Such emissions data and information specified in paragraph (a) of this section must be submitted to the AIRS/AFS database via either online data entry or batch update system.

(c) The emissions data and information specified by paragraph (a) of this section must be submitted in the annual report for any point source for which one or more of the following conditions occurs:

(1) A source achieves compliance at any time within the reporting period with any regulation of an applicable plan,

(2) A new or modified source receives approval to construct during the reporting period or begins operating during the reporting period,

(3) A source ceases operations during the reporting period, or

(4) A source's emissions have changed more than 5% from the most recently submitted emissions data.

(d) If, as determined by the State and the Regional Administrator, the emissions from any point source have not changed more than 5% from the most recently submitted emissions data, the State shall update the year of record of the previously reported data and information specified by paragraph (a) of this section.

[44 FR 27569, May 10, 1979, as amended at 52 FR 24714, July 1, 1987; 64 FR 7463, Feb. 12, 1999]

§ 51.324 Progress in plan enforcement.

(a) For each point source, the State shall report any achievement made during the reporting period of any increment of progress of compliance schedules required by:

(1) The applicable plan, or

(2) Any enforcement order or other State action required to be submitted pursuant to § 51.327.

(b) For each point source, the State shall report any enforcement action taken during the reporting period and not submitted under § 51.327 which results in civil or criminal penalties.

§ 51.326 Reportable revisions.

The State shall identify and describe all substantive plan revisions during the reporting period of the applicable plan other than revisions to rules and regulations or compliance schedules submitted in accordance with § 51.6(d). Substantive revisions shall include but are not limited to changes in stack-test procedures for determining compliance with applicable regulations, modifications in the projected total manpower needs to carry out the approved plan, and all changes in responsibilities given to local agencies to carry out various portions of the plan.

§ 51.327 Enforcement orders and other State actions.

(a) Any State enforcement order, including any State court order, must be submitted to the Administrator within 60 days of its issuance or adoption by the State.

(b) A State enforcement order or other State action must be submitted as a revision to the applicable implementation plan pursuant to § 51.104 and approved by the Administrator in order to be considered a revision to such plan.

[36 FR 22398, Nov. 25, 1971, as amended at 51 FR 40675, Nov. 7, 1986]

§ 51.328 [Reserved]

Subpart R—Extensions

§ 51.341 Request for 18-month extension.

(a) Upon request of the State made in accordance with this section, the Administrator may, whenever he determines necessary, extend, for a period not to exceed 18 months, the deadline for submitting that portion of a plan that implements a secondary standard.

(b) Any such request must show that attainment of the secondary standards will require emission reductions exceeding those which can be achieved through the application of reasonably available control technology.

(c) Any such request for extension of the deadline with respect to any State's portion of an interstate region must be submitted jointly with requests for such extensions from all other States within the region or must show that all such States have been notified of such request.

(d) Any such request must be submitted sufficiently early to permit development of a plan prior to the deadline in the event that such request is denied.

[51 FR 40675, Nov. 7, 1986]

Subpart S—Inspection/Maintenance Program Requirements

SOURCE: 57 FR 52987, Nov. 5, 1992, unless otherwise noted.

§ 51.350 Applicability.

Inspection/maintenance (I/M) programs are required in both ozone and carbon monoxide (CO) nonattainment areas, depending upon population and nonattainment classification or design value.

(a) *Nonattainment area classification and population criteria.* (1) States or areas within an ozone transport region shall implement enhanced I/M programs in any metropolitan statistical area (MSA), or portion of an MSA, within the State or area with a 1990 population of 100,000 or more as defined by the Office of Management and Budget (OMB) regardless of the area's attainment classification. In the case of a multi-state MSA, enhanced I/M shall be implemented in all ozone transport region portions if the sum of these portions has a population of 100,000 or more, irrespective of the population of the portion in the individual ozone transport region State or area.

(2) Apart from those areas described in paragraph (a)(1) of this section, any area classified as serious or worse ozone nonattainment, or as moderate or serious CO nonattainment with a design value greater than 12.7 ppm, and having a 1980 Bureau of Census-defined (Census-defined) urbanized area population of 200,000 or more, shall implement enhanced I/M in the 1990 Census-defined urbanized area.

(3) Any area classified, as of November 5, 1992, as marginal ozone nonattainment or moderate CO nonattainment with a design value of 12.7 ppm or less shall continue operating I/M programs that were part of an approved State Implementation Plan (SIP) as of November 15, 1990, and shall update those programs as necessary to meet the basic I/M program requirements of this subpart. Any such area required by the Clean Air Act, as in effect prior to November 15, 1990, as interpreted in EPA guidance, to have an I/M program shall also implement a basic I/M program. Serious, severe and extreme ozone areas and CO areas over 12.7 ppm shall also continue operating existing I/M programs and shall upgrade such programs, as appropriate, pursuant to this subpart.

(4) Any area classified as moderate ozone nonattainment, and not required

to implement enhanced I/M under paragraph (a)(1) of this section, shall implement basic I/M in any 1990 Census-defined urbanized area with a population of 200,000 or more.

(5) [Reserved]

(6) If the boundaries of a moderate ozone nonattainment area are changed pursuant to section 107(d)(4)(A)(i)-(ii) of the Clean Air Act, such that the area includes additional urbanized areas with a population of 200,000 or more, then a basic I/M program shall be implemented in these additional urbanized areas.

(7) If the boundaries of a serious or worse ozone nonattainment area or of a moderate or serious CO nonattainment area with a design value greater than 12.7 ppm are changed any time after enactment pursuant to section 107(d)(4)(A) such that the area includes additional urbanized areas, then an enhanced I/M program shall be implemented in the newly included 1990 Census-defined urbanized areas, if the 1980 Census-defined urban area population is 200,000 or more.

(8) If a marginal ozone nonattainment area, not required to implement enhanced I/M under paragraph (a)(1) of this section, is reclassified to moderate, a basic I/M program shall be implemented in the 1990 Census-defined urbanized area(s) with a population of 200,000 or more. If the area is reclassified to serious or worse, an enhanced I/M program shall be implemented in the 1990 Census-defined urbanized area, if the 1980 Census-defined urban area population is 200,000 or more.

(9) If a moderate ozone or CO nonattainment area is reclassified to serious or worse, an enhanced I/M program shall be implemented in the 1990 Census-defined urbanized area, if the 1980 Census-defined population is 200,000 or more.

(b) *Extent of area coverage.* (1) In an ozone transport region, the program shall cover all counties within subject MSAs or subject portions of MSAs, as defined by OMB in 1990, except largely rural counties having a population density of less than 200 persons per square mile based on the 1990 Census and counties with less than 1% of the population in the MSA may be excluded provided that at least 50% of the MSA population is included in the program. This provision does not preclude the voluntary inclusion of portions of an excluded county. Non-urbanized islands not connected to the mainland by roads, bridges, or tunnels may be excluded without regard to population.

(2) Outside of ozone transport regions, programs shall nominally cover at least the entire urbanized area, based on the 1990 census. Exclusion of some urban population is allowed as long as an equal number of non-urban residents of the MSA containing the subject urbanized area are included to compensate for the exclusion.

(3) Emission reduction benefits from expanding coverage beyond the minimum required urban area boundaries can be applied toward the reasonable further progress requirements or can be used for offsets, provided the covered vehicles are operated in the nonattainment area, but not toward the enhanced I/M performance standard requirement.

(4) In a multi-state urbanized area with a population of 200,000 or more that is required under paragraph (a) of this section to implement I/M, any State with a portion of the area having a 1990 Census-defined population of 50,000 or more shall implement an I/M program. The other coverage requirements in paragraph (b) of this section shall apply in multi-state areas as well.

(5) Notwithstanding the limitation in paragraph (b)(3) of this section, in an ozone transport region, States which opt for a program which meets the performance standard described in § 51.351(h) and claim in their SIP less emission reduction credit than the basic performance standard for one or more pollutants, may apply a geographic bubble covering areas in the State not otherwise subject to an I/M requirement to achieve emission reductions from other measures equal to or greater than what would have been achieved if the low enhanced performance standard were met in the subject I/M areas. Emissions reductions from non-I/M measures shall not be counted towards the OTR low enhanced performance standard.

(c) *Requirements after attainment.* All I/M programs shall provide that the program will remain effective, even if

the area is redesignated to attainment status, until the State submits and EPA approves a maintenance plan, under section 175A, which convincingly demonstrates that the area can maintain the relevant standard for the maintenance period without benefit of the emission reductions attributable to the I/M program. The State shall commit to fully implement and enforce the program throughout such period, and, at a minimum, for the purposes of SIP approval, legislation authorizing the program shall not sunset prior to the attainment deadline.

(d) *SIP requirements.* The SIP shall describe the applicable areas in detail and, consistent with §51.372 of this subpart, shall include the legal authority or rules necessary to establish program boundaries.

[57 FR 52987, Nov. 5, 1992, as amended at 60 FR 48034, Sept. 18, 1995; 61 FR 39036, July 25, 1996]

§51.351 Enhanced I/M performance standard.

(a) Enhanced I/M programs shall be designed and implemented to meet or exceed a minimum performance standard, which is expressed as emission levels in area-wide average grams per mile (gpm), achieved from highway mobile sources as a result of the program. The emission levels achieved by the State's program design shall be calculated using the most current version, at the time of submittal, of the EPA mobile source emission factor model or an alternative model approved by the Administrator, and shall meet the minimum performance standard both in operation and for SIP approval. Areas shall meet the performance standard for the pollutants which cause them to be subject to enhanced I/M requirements. In the case of ozone nonattainment areas subject to enhanced I/M and subject areas in the Ozone Transport Region, the performance standard must be met for both oxides of nitrogen (NO_X) and volatile organic compounds (VOCs), except as provided in paragraph (d) of this section.

(1) *Network type.* Centralized testing.

(2) *Start date.* For areas with existing I/M programs, 1983. For areas newly subject, 1995.

(3) *Test frequency*. Annual testing.

(4) *Model year coverage.* Testing of 1968 and later vehicles.

(5) *Vehicle type coverage.* Light duty vehicles, and light duty trucks, rated up to 8,500 pounds Gross Vehicle Weight Rating (GVWR).

(6) *Exhaust emission test type.* Transient mass-emission testing on 1986 and later model year vehicles using the IM240 driving cycle, two-speed testing (as described in appendix B of this subpart S) of 1981–1985 vehicles, and idle testing (as described in appendix B of this subpart S) of pre-1981 vehicles is assumed.

(7) *Emission standards.* (i) Emission standards for 1986 through 1993 model year light duty vehicles, and 1994 and 1995 light-duty vehicles not meeting Tier 1 emission standards, of 0.80 gpm hydrocarbons (HC), 20 gpm CO, and 2.0 gpm NO_X;

(ii) Emission standards for 1986 through 1993 light duty trucks less than 6000 pounds gross vehicle weight rating (GVWR), and 1994 and 1995 trucks not meeting Tier 1 emission standards, of 1.2 gpm HC, 20 gpm CO, and 3.5 gpm NO_X;

(iii) Emission standards for 1986 through 1993 light duty trucks greater than 6000 pounds GVWR, and 1994 and 1995 trucks not meeting Tier 1 emission standards, of 1.2 gpm HC, 20 gpm CO, and 3.5 gpm NO_X;

(iv) Emission standards for 1994 and later light duty vehicles meeting Tier 1 emission standards of 0.70 gpm HC, 15 gpm CO, and 1.4 gpm NO_X;

(v) Emission standards for 1994 and later light duty trucks under 6000 pounds GVWR and meeting Tier 1 emission standards of 0.70 gpm HC, 15 gpm CO and 2.0 gpm NO_X;

(vi) Emission standards for 1994 and later light duty trucks greater than 6000 pounds GVWR and meeting Tier 1 emission standards of 0.80 gpm HC, 15 gpm CO and 2.0 gpm NO_X;

(vii) Emission standards for 1981–1985 model year vehicles of 1.2% CO, and 220 ppm HC for the idle, two-speed tests and loaded steady-state tests (as described in appendix B of this subpart S); and

(viii) Maximum exhaust dilution measured as no less than 6% CO plus

carbon dioxide (CO_2) on vehicles subject to a steady-state test (as described in appendix B of this subpart S).

(8) *Emission control device inspections.* Visual inspection of the catalyst and fuel inlet restrictor on all 1984 and later model year vehicles.

(9) *Evaporative system function checks.* Evaporative system integrity (pressure) test on 1983 and later model year vehicles and an evaporative system transient purge test on 1986 and later model year vehicles.

(10) *Stringency.* A 20% emission test failure rate among pre-1981 model year vehicles.

(11) *Waiver rate.* A 3% waiver rate, as a percentage of failed vehicles.

(12) *Compliance rate.* A 96% compliance rate.

(13) *Evaluation date.* Enhanced I/M programs shall be shown to obtain the same or lower emission levels as the model program by 2000 for ozone nonattainment areas and 2001 for CO nonattainment areas, and for severe and extreme ozone nonattainment areas, on each applicable milestone and attainment deadline, thereafter. Milestones for NO_X shall be the same as for ozone.

(b) *On-road testing.* The performance standard shall include on-road testing of at least 0.5% of the subject vehicle population, or 20,000 vehicles whichever is less, as a supplement to the periodic inspection required in paragraphs (f) and (g) of this section. Specific requirements are listed in § 51.371 of this subpart.

(c) *On-board diagnostics (OBD).* The performance standard shall include inspection of all 1996 and later light-duty vehicles and light-duty trucks equipped with certified on-board diagnostic systems, and repair of malfunctions or system deterioration identified by or affecting OBD systems as specified in § 51.357.

(d) *Modeling requirements.* Equivalency of the emission levels which will be achieved by the I/M program design in the SIP to those of the model program described in this section shall be demonstrated using the most current version of EPA's mobile source emission model, or an alternative approved by the Administrator, using EPA guidance to aid in the estimation of input parameters. States may adopt alternative approaches that meet this performance standard. States may do so through program design changes that affect normal I/M input parameters to the mobile source emission factor model, or through program changes (such as the accelerated retirement of high emitting vehicles) that reduce in-use mobile source emissions. If the Administrator finds, under section 182(b)(1)(A)(i) of the Act pertaining to reasonable further progress demonstrations or section 182(f)(1) of the Act pertaining to provisions for major stationary sources, that NO_X emission reductions are not beneficial in a given ozone nonattainment area, then NO_X emission reductions are not required of the enhanced I/M program, but the program shall be designed to offset NO_X increases resulting from the repair of HC and CO failures.

(e) [Reserved]

(f) *High Enhanced Performance Standard.* Except as provided in paragraph (g) of this section, the model program elements for the enhanced I/M performance standard shall be as follows:

(1) *Network type.* Centralized testing.

(2) *Start date.* For areas with existing I/M programs, 1983. For areas newly subject, 1995.

(3) *Test frequency.* Annual testing.

(4) *Model year coverage.* Testing of 1968 and later vehicles.

(5) *Vehicle type coverage.* Light duty vehicles, and light duty trucks, rated up to 8,500 pounds Gross Vehicle Weight Rating (GVWR).

(6) *Exhaust emission test type.* Transient mass-emission testing on 1986 and later model year vehicles using the IM240 driving cycle, two-speed testing (as described in appendix B of this subpart S) of 1981–1985 vehicles, and idle testing (as described in appendix B of this subpart S) of pre-1981 vehicles is assumed.

(7) *Emission standards.* (i) Emission standards for 1986 through 1993 model year light duty vehicles, and 1994 and 1995 light-duty vehicles not meeting Tier 1 emission standards, of 0.80 gpm hydrocarbons (HC), 20 gpm CO, and 2.0 gpm NO_X;

(ii) Emission standards for 1986 through 1993 light duty trucks less than 6000 pounds gross vehicle weight rating (GVWR), and 1994 and 1995

trucks not meeting Tier 1 emission standards, of 1.2 gpm HC, 20 gpm CO, and 3.5 gpm NO_X;

(iii) Emission standards for 1986 through 1993 light duty trucks greater than 6000 pounds GVWR, and 1994 and 1995 trucks not meeting the Tier 1 emission standards, of 1.2 gpm HC, 20 gpm CO, and 3.5 gpm NO_X;

(iv) Emission standards for 1994 and later light duty vehicles meeting Tier 1 emission standards of 0.70 gpm HC, 15 gpm CO, and 1.4 gpm NO_X;

(v) Emission standards for 1994 and later light duty trucks under 6000 pounds GVWR and meeting Tier 1 emission standards of 0.70 gpm HC, 15 gpm CO, and 2.0 gpm NO_X;

(vi) Emission standards for 1994 and later light duty trucks greater than 6000 pounds GVWR and meeting Tier 1 emission standards of 0.80 gpm HC, 15 gpm CO and 2.5 gpm NO_X;

(vii) Emission standards for 1981–1985 model year vehicles of 1.2% CO, and 220 gpm HC for the idle, two-speed tests and loaded steady-state tests (as described in appendix B of this subpart S); and

(viii) Maximum exhaust dilution measured as no less than 6% CO plus carbon dioxide (CO_2) on vehicles subject to a steady-state test (as described in appendix B of this subpart S); and

(viii) Maximum exhaust dilution measured as no less than 6% CO plus carbon dioxide (CO_2) on vehicles subject to a steady-state test (as described in appendix B of this subpart S).

(8) *Emission control device inspections.* (i) Visual inspection of the catalyst and fuel inlet restrictor on all 1984 and later model year vehicles.

(ii) Visual inspection of the positive crankcase ventilation valve on 1968 through 1971 model years, inclusive, and of the exhaust gas recirculation valve on 1972 through 1983 model year vehicles, inclusive.

(9) *Evaporative system function checks.* Evaporative system integrity (pressure) test on 1983 and later model year vehicles and an evaporative system transient purge test on 1986 and later model year vehicles.

(10) *Stringency.* A 20% emission test failure rate among pre-1981 model year vehicles.

(11) *Waiver rate.* A 3% waiver rate, as a percentage of failed vehicles.

(12) *Compliance rate.* A 96% compliance rate.

(13) *Evaluation date.* Enhanced I/M program areas shall be shown to obtain the same or lower emission levels as the model program described in this paragraph by 2000 for ozone nonattainment areas and 2001 for CO nonattainment areas, and for severe and extreme ozone nonattainment areas, on each applicable milestone and attainment deadline, thereafter. Milestones for NO_X shall be the same as for ozone.

(g) *Alternate Low Enhanced I/M Performance Standard.* An enhanced I/M area which is either not subject to or has an approved State Implementation Plan pursuant to the requirements of the Clean Air Act Amendments of 1990 for Reasonable Further Progress in 1996, and does not have a disapproved plan for Reasonable Further Progress for the period after 1996 or a disapproved plan for attainment of the air quality standards for ozone or CO, may select the alternate low enhanced I/M performance standard described below in lieu of the standard described in paragraph (f) of this section. The model program elements for this alternate low enhanced I/M performance standard are:

(1) *Network type.* Centralized testing.

(2) *Start date.* For areas with existing I/M programs, 1983. For areas newly subject, 1995.

(3) *Test frequency.* Annual testing.

(4) *Model year coverage.* Testing of 1968 and newer vehicles.

(5) *Vehicle type coverage.* Light duty vehicles, and light duty trucks, rated up to 8,500 pounds GVWR.

(6) *Exhaust emission test type.* Idle testing of all covered vehicles (as described in appendix B of subpart S).

(7) *Emission standards.* Those specified in 40 CFR part 85, subpart W.

(8) *Emission control device inspections.* Visual inspection of the positive crankcase ventilation valve on all 1968 through 1971 model year vehicles, inclusive, and of the exhaust gas recirculation valve on all 1972 and newer model year vehicles.

(9) *Evaporative system function checks.* None.

(10) *Stringency.* A 20% emission test failure rate among pre-1981 model year vehicles.

(11) *Waiver rate.* A 3% waiver rate, as a percentage of failed vehicles.

(12) Compliance rate. A 96% compliance rate.

(13) Evaluation date. Enhanced I/M program areas subject to the provisions of this paragraph shall be shown to obtain the same or lower emission levels as the model program described in this paragraph by 2000 for ozone nonattainment areas and 2001 for CO nonattainment areas, and for severe and extreme ozone nonattainment areas, on each applicable milestone and attainment deadline, thereafter. Milestones for NO_X shall be the same as for ozone.

(h) *Ozone Transport Region Low-Enhanced Performance Standard.* An attainment area, marginal ozone area, or moderate ozone area with a 1980 Census population of less than 200,000 in the urbanized area, in an ozone transport region, that is required to implement enhanced I/M under section 184(b)(1)(A) of the Clean Air Act, but was not previously required to or did not in fact implement basic I/M under the Clean Air Act as enacted prior to 1990 and is not subject to the requirements for basic I/M programs in this subpart, may select the performance standard described below in lieu of the standard described in paragraph (f) or (g) of this section as long as the difference in emission reductions between the program described in paragraph (g) and this paragraph are made up with other measures, as provided in § 51.350(b)(5). Offsetting measures shall not include those otherwise required by the Clean Air Act in the areas from which credit is bubbled. The program elements for this alternate OTR enhanced I/M performance standard are:

(1) *Network type.* Centralized testing.

(2) *Start date.* January 1, 1999.

(3) *Test frequency.* Annual testing.

(4) *Model year coverage.* Testing of 1968 and newer vehicles.

(5) *Vehicle type coverage.* Light duty vehicles, and light duty trucks, rated up to 8,500 pounds GVWR.

(6) *Exhaust emission test type.* Remote sensing measurements on 1968–1995 vehicles; on-board diagnostic system checks on 1996 and newer vehicles.

(7) *Emission standards.* For remote sensing measurements, a carbon monoxide standard of 7.5% (with at least two separate readings above this level to establish a failure).

(8) *Emission control device inspections.* Visual inspection of the catalytic converter on 1975 and newer vehicles and visual inspection of the positive crankcase ventilation valve on 1968–1974 vehicles.

(9) *Waiver rate.* A 3% waiver rate, as a percentage of failed vehicles.

(10) *Compliance rate.* A 96% compliance rate.

(11) *Evaluation dates.* Enhanced I/M program areas subject to the provisions of this paragraph shall be shown to obtain the same or lower VOC and NO_X emission levels as the model program described in this paragraph by January 1, 2000, 2003, 2006, and 2007. Equality of substituted emission reductions to the benefits of the low enhanced performance standard must be demonstrated for the same evaluation dates.

[57 FR 52987, Nov. 5, 1992, as amended at 58 FR 59367, Nov. 9, 1993; 59 FR 32343, June 23, 1994; 60 FR 48035, Sept. 18, 1995; 61 FR 39036, July 25, 1996; 61 FR 40945, Aug. 6, 1996; 63 FR 24433, May 4, 1998]

§ 51.352 Basic I/M performance standard.

(a) Basic I/M programs shall be designed and implemented to meet or exceed a minimum performance standard, which is expressed as emission levels achieved from highway mobile sources as a result of the program. The performance standard shall be established using the following model I/M program inputs and local characteristics, such as vehicle mix and local fuel controls. Similarly, the emission reduction benefits of the State's program design shall be estimated using the most current version of the EPA mobile source emission model, and shall meet the minimum performance standard both in operation and for SIP approval.

(1) *Network type.* Centralized testing.

(2) *Start date.* For areas with existing I/M programs, 1983. For areas newly subject, 1994.

(3) *Test frequency.* Annual testing.

(4) *Model year coverage.* Testing of 1968 and later model year vehicles.

(5) *Vehicle type coverage.* Light duty vehicles.

(6) *Exhaust emission test type.* Idle test.

(7) *Emission standards.* No weaker than specified in 40 CFR part 85, subpart W.

(8) *Emission control device inspections.* None.

(9) *Stringency.* A 20% emission test failure rate among pre-1981 model year vehicles.

(10) *Waiver rate.* A 0% waiver rate.

(11) *Compliance rate.* A 100% compliance rate.

(12) *Evaluation date.* Basic I/M programs shall be shown to obtain the same or lower emission levels as the model inputs by 1997 for ozone nonattainment areas and 1996 for CO nonattainment areas; and, for serious or worse ozone nonattainment areas, on each applicable milestone and attainment deadline, thereafter.

(b) *Oxides of nitrogen.* Basic I/M testing in ozone nonattainment areas shall be designed such that no increase in NO_X emissions occurs as a result of the program. If the Administrator finds, under section 182(b)(1)(A)(i) of the Act pertaining to reasonable further progress demonstrations or section 182(f)(1) of the Act pertaining to provisions for major stationary sources, that NO_X emission reductions are not beneficial in a given ozone nonattainment area, then the basic I/M NO_X requirement may be omitted. States shall implement any required NO_X controls within 12 months of implementation of the program deadlines required in §51.373 of this subpart, except that newly implemented I/M programs shall include NO_X controls from the start.

(c) *On-board diagnostics (OBD).* The performance standard shall include inspection of all 1996 and later light-duty vehicles and light-duty trucks equipped with certified on-board diagnostic systems, and repair of malfunctions or system deterioration identified by or affecting OBD systems as specified in §51.357.

(d) *Modeling requirements.* Equivalency of emission levels which will be achieved by the I/M program design in the SIP to those of the model program described in this section shall be demonstrated using the most current version of EPA's mobile source emission model and EPA guidance on the estimation of input parameters. Areas required to implement basic I/M programs shall meet the performance standard for the pollutants which cause them to be subject to basic requirements. Areas subject as a result of ozone nonattainment shall meet the standard for VOCs and shall demonstrate no NO_X increase, as required in paragraph (b) of this section.

[57 FR 52987, Nov. 5, 1992, as amended at 61 FR 40945, Aug. 6, 1996; 63 FR 24433, May 4, 1998]

§51.353 Network type and program evaluation.

Enhanced I/M programs shall be operated in a centralized test-only format, unless the State can demonstrate that a decentralized program is equally effective in achieving the enhanced I/M performance standard. Basic I/M programs can be centralized, decentralized, or a hybrid at the State's discretion, but shall be demonstrated to achieve the same emission reduction as the program described in §51.352 of this subpart.

(a) *Presumptive equivalency.* A decentralized network consisting of stations that only perform official I/M testing (which may include safety-related inspections) and in which owners and employees of those stations, or companies owning those stations, are contractually or legally barred from engaging in motor vehicle repair or service, motor vehicle parts sales, and motor vehicle sale and leasing, either directly or indirectly, and are barred from referring vehicle owners to particular providers of motor vehicle repair services (except as provided in §51.369(b)(1) of this subpart) shall be considered equivalent to a centralized, test-only system. States may allow such stations to engage in the sale of refreshments for the use of employees and customers waiting at the station and may fulfill other functions typically carried out by the State such as renewal of vehicle registration and driver's licenses, or tax and fee collections.

(b) *Case-by-case equivalency.* (1) Credits for test-and-repair networks, i.e., those not meeting the requirements of

paragraph (a) of this section, are assumed to be 50% less than those for a test-only network for the tailpipe emission test, purge test, evaporative system integrity test, catalyst check, and gas cap check; and 75% less for the evaporative canister checks, PCV check, and air system checks. Smaller reductions in credits for the various test protocols may be claimed if a State can demonstrate to the satisfaction of the Administrator that based on past performance with the specific test-type and inspection standards employed, its test-and-repair system will exceed these levels. At a minimum, such a demonstration shall include:

(i) Surveys that assess the effectiveness of repairs performed on vehicles that failed the tailpipe emission test and evaporative system tests;

(ii) In programs including tampering checks, measurement of actual tampering rates, their change over time, and the change attributable to finding and fixing such tampering as opposed to deterrence effects; and

(iii) The results of undercover surveys of inspector effectiveness as it relates to identifying vehicles that need repair.

(2) In the case of hybrid systems, which may be implemented in basic I/M areas, including both test-only and test-and-repair facilities, full credit shall apply to the portion of the fleet initially tested and subsequently retested at a test-only facility meeting the requirements of paragraph (a) of this section, and to the portion of the fleet initially tested and failed at a test-and-repair facility but subsequently passing a comprehensive retest at a test-only facility meeting those same requirements. The credit loss assumptions described in paragraph (b)(1) of this section shall apply to the portion of the fleet initially passed at a test-and-repair facility, and to the portion initially failed at a test-only facility and retested at a test-and-repair facility.

(3) Areas operating test-and-repair networks or hybrid networks may, in the future, claim greater effectiveness than described in paragraph (b)(1) of this section, if a demonstration of greater effectiveness is made to the satisfaction of the Administrator using the program evaluation protocol described in paragraph (c) of this section.

(c) *Program evaluation.* Enhanced I/M programs shall include an ongoing evaluation to quantify the emission reduction benefits of the program, and to determine if the program is meeting the requirements of the Clean Air Act and this subpart.

(1) The State shall report the results of the program evaluation on a biennial basis, starting two years after the initial start date of mandatory testing as required in § 51.373 of this subpart.

(2) The evaluation shall be considered in establishing actual emission reductions achieved from I/M for the purposes of satisfying the requirements of sections 182(g)(1) and 182(g)(2) of the Clean Air Act, relating to reductions in emissions and compliance demonstration.

(3) The evaluation program shall consist, at a minimum, of those items described in paragraph (b)(1) of this section and program evaluation data using a sound evaluation methodology, as approved by EPA, and evaporative system checks, specified in § 51.357(a)(9) and (10) of this subpart, for model years subject to those evaporative system test procedures. The test data shall be obtained from a representative, random sample, taken at the time of initial inspection (before repair) on a minimum of 0.1 percent of the vehicles subject to inspection in a given year. Such vehicles shall receive a State administered or monitored test, as specified in this paragraph (c)(3), prior to the performance of I/M-triggered repairs during the inspection cycle under consideration.

(4) The program evaluation test data shall be submitted to EPA and shall be capable of providing accurate information about the overall effectiveness of an I/M program, such evaluation to begin no later than November 30, 1998.

(5) Areas that qualify for and choose to implement an OTR low enhanced I/M program, as established in § 51.351(h), and that claim in their SIP less emission reduction credit than the basic performance standard for one or more pollutants, are exempt from the requirements of paragraphs (c)(1) through (c)(4) of this section. The reports required under § 51.366 of this part

shall be sufficient in these areas to satisfy the requirements of Clean Air Act for program reporting.

(d) *SIP requirements.* (1) The SIP shall include a description of the network to be employed, the required legal authority, and, in the case of areas making claims under paragraph (b) of this section, the required demonstration.

(2) The SIP shall include a description of the evaluation schedule and protocol, the sampling methodology, the data collection and analysis system, the resources and personnel for evaluation, and related details of the evaluation program, and the legal authority enabling the evaluation program.

[57 FR 52987, Nov. 5, 1992, as amended at 58 FR 59367, Nov. 9, 1993; 61 FR 39037, July 25, 1996; 63 FR 1368, Jan. 9, 1998]

§ 51.354 Adequate tools and resources.

(a) *Administrative resources.* The program shall maintain the administrative resources necessary to perform all of the program functions including quality assurance, data analysis and reporting, and the holding of hearings and adjudication of cases. A portion of the test fee or a separately assessed per vehicle fee shall be collected, placed in a dedicated fund and retained, to be used to finance program oversight, management, and capital expenditures. Alternatives to this approach shall be acceptable if the State can demonstrate that adequate funding of the program can be maintained in some other fashion (e.g., through contractual obligation along with demonstrated past performance). Reliance on future uncommitted annual or biennial appropriations from the State or local General Fund is not acceptable, unless doing otherwise would be a violation of the State's constitution. This section shall in no way require the establishment of a test fee if the State chooses to fund the program in some other manner.

(b) *Personnel.* The program shall employ sufficient personnel to effectively carry out the duties related to the program, including but not limited to administrative audits, inspector audits, data analysis, program oversight, program evaluation, public education and assistance, and enforcement against stations and inspectors as well as against motorists who are out of compliance with program regulations and requirements.

(c) *Equipment.* The program shall possess equipment necessary to achieve the objectives of the program and meet program requirements, including but not limited to a steady supply of vehicles for covert auditing, test equipment and facilities for program evaluation, and computers capable of data processing, analysis, and reporting. Equipment or equivalent services may be contractor supplied or owned by the State or local authority.

(d) *SIP requirements.* The SIP shall include a description of the resources that will be used for program operation, and discuss how the performance standard will be met.

(1) The SIP shall include a detailed budget plan which describes the source of funds for personnel, program administration, program enforcement, purchase of necessary equipment (such as vehicles for undercover audits), and any other requirements discussed throughout, for the period prior to the next biennial self-evaluation required in § 51.366 of this subpart.

(2) The SIP shall include a description of personnel resources. The plan shall include the number of personnel dedicated to overt and covert auditing, data analysis, program administration, enforcement, and other necessary functions and the training attendant to each function.

§ 51.355 Test frequency and convenience.

(a) The performance standards for I/M programs assume an annual test frequency; other schedules may be approved if the required emission targets are achieved. The SIP shall describe the test schedule in detail, including the test year selection scheme if testing is other than annual. The SIP shall include the legal authority necessary to implement and enforce the test frequency requirement and explain how the test frequency will be integrated with the enforcement process.

(b) In enhanced I/M programs, test systems shall be designed in such a way as to provide convenient service to motorists required to get their vehicles

tested. The SIP shall demonstrate that the network of stations providing test services is sufficient to insure short waiting times to get a test and short driving distances. Stations shall be required to adhere to regular testing hours and to test any subject vehicle presented for a test during its test period.

§ 51.356 Vehicle coverage.

The performance standard for enhanced I/M programs assumes coverage of all 1968 and later model year light duty vehicles and light duty trucks up to 8,500 pounds GVWR, and includes vehicles operating on all fuel types. The standard for basic I/M programs does not include light duty trucks. Other levels of coverage may be approved if the necessary emission reductions are achieved. Vehicles registered or required to be registered within the I/M program area boundaries and fleets primarily operated within the I/M program area boundaries and belonging to the covered model years and vehicle classes comprise the subject vehicles.

(a) *Subject vehicles.* (1) All vehicles of a covered model year and vehicle type shall be tested according to the applicable test schedule, including leased vehicles whose registration or titling is in the name of an equity owner other than the lessee or user.

(2) All subject fleet vehicles shall be inspected. Fleets may be officially inspected outside of the normal I/M program test facilities, if such alternatives are approved by the program administration, but shall be subject to the same test requirements using the same quality control standards as non-fleet vehicles. If all vehicles in a particular fleet are tested during one part of the cycle, then the quality control requirements shall be met during the time of testing only. Any vehicle available for rent in the I/M area or for use in the I/M area shall be subject. Fleet vehicles not being tested in normal I/M test facilities in enhanced I/M programs, however, shall be inspected in independent, test-only facilities, according to the requirements of § 51.353(a) of this subpart.

(3) Subject vehicles which are registered in the program area but are primarily operated in another I/M area shall be tested, either in the area of primary operation, or in the area of registration. Alternate schedules may be established to permit convenient testing of these vehicles (e.g., vehicles belonging to students away at college should be rescheduled for testing during a visit home). I/M programs shall make provisions for providing official testing to vehicles registered elsewhere.

(4) Vehicles which are operated on Federal installations located within an I/M program area shall be tested, regardless of whether the vehicles are registered in the State or local I/M area. This requirement applies to all employee-owned or leased vehicles (including vehicles owned, leased, or operated by civilian and military personnel on Federal installations) as well as agency-owned or operated vehicles, except tactical military vehicles, operated on the installation. This requirement shall not apply to visiting agency, employee, or military personnel vehicles as long as such visits do not exceed 60 calendar days per year. In areas without test fees collected in the lane, arrangements shall be made by the installation with the I/M program for reimbursement of the costs of tests provided for agency vehicles, at the discretion of the I/M agency. The installation shall provide documentation of proof of compliance to the I/M agency. The documentation shall include a list of subject vehicles and shall be updated periodically, as determined by the I/M program administrator, but no less frequently than each inspection cycle. The installation shall use one of the following methods to establish proof of compliance:

(i) Presentation of a valid certificate of compliance from the local I/M program, from any other I/M program at least as stringent as the local program, or from any program deemed acceptable by the I/M program administrator.

(ii) Presentation of proof of vehicle registration within the geographic area covered by the I/M program, except for any program whose enforcement is not through registration denial.

(iii) Another method approved by the State or local I/M program administrator.

(5) Special exemptions may be permitted for certain subject vehicles provided a demonstration is made that the performance standard will be met.

(b) *SIP requirements.* (1) The SIP shall include a detailed description of the number and types of vehicles to be covered by the program, and a plan for how those vehicles are to be identified, including vehicles that are routinely operated in the area but may not be registered in the area.

(2) The SIP shall include a description of any special exemptions which will be granted by the program, and an estimate of the percentage and number of subject vehicles which will be impacted. Such exemptions shall be accounted for in the emission reduction analysis.

(3) The SIP shall include the legal authority or rule necessary to implement and enforce the vehicle coverage requirement.

§ 51.357 Test procedures and standards.

Written test procedures and pass/fail standards shall be established and followed for each model year and vehicle type included in the program.

(a) *Test procedure requirements.* Emission tests and functional tests shall be conducted according to good engineering practices to assure test accuracy.

(1) Initial tests (i.e., those occurring for the first time in a test cycle) shall be performed without repair or adjustment at the inspection facility, prior to the test, except as provided in paragraph (a)(10)(i) of this section.

(2) The vehicle owner or driver shall have access to the test area such that observation of the entire official inspection process on the vehicle is permitted. Such access may be limited but shall in no way prevent full observation.

(3) An official test, once initiated, shall be performed in its entirety regardless of intermediate outcomes except in the case of invalid test condition, unsafe conditions, or fast pass/fail algorithms.

(4) Tests involving measurement shall be performed with program-approved equipment that has been calibrated accordingly to the quality procedures contained in appendix A to this subpart.

(5) Vehicles shall be rejected from testing if the exhaust system is missing or leaking, or if the vehicle is in an unsafe condition for testing.

(6) Vehicles shall be retested after repair for any portion of the inspection that is failed on the previous test to determine if repairs were effective. To the extent that repair to correct a previous failure could lead to failure of another portion of the test, that portion shall also be retested. Evaporative system repairs shall trigger an exhaust emissions retest.

(7) *Steady-state testing.* Steady-state tests shall be performed in accordance with the procedures contained in appendix B to this subpart.

(8) *Emission control device inspection.* Visual emission control device checks shall be performed through direct observation or through indirect observation using a mirror, video camera or other visual aid. These inspections shall include a determination as to whether each subject device is present and appears to be properly connected and appears to be the correct type for the certified vehicle configuration.

(9) *Evaporative system purge test procedure.* The purge test procedure shall consist of measuring the total purge flow (in standard liters) occurring in the vehicle's evaporative system during the transient dynamometer emission test specified in paragraph (a)(11) of this section. The purge flow measurement system shall be connected to the purge portion of the evaporative system in series between the canister and the engine, preferably near the canister. The inspector shall be responsible for ensuring that all items that are disconnected in the conduct of the test procedure are properly re-connected at the conclusion of the test procedure. Alternative procedures may be used if they are shown to be equivalent or better to the satisfaction of the Administrator. Except in the case of government-run test facilities claiming sovereign immunity, any damage done to the evaporative emission control system during this test shall be repaired at the expense of the inspection facility.

(10) *Evaporative system integrity test procedure.* The test sequence shall consist of the following steps:

(i) Test equipment shall be connected to the fuel tank canister hose at the canister end. The gas cap shall be checked to ensure that it is properly, but not excessively tightened, and shall be tightened if necessary.

(ii) The system shall be pressurized to 14±0.5 inches of water without exceeding 26 inches of water system pressure.

(iii) Close off the pressure source, seal the evaporative system and monitor pressure decay for up to two minutes.

(iv) Loosen the gas cap after a maximum of two minutes and monitor for a sudden pressure drop, indicating that the fuel tank was pressurized.

(v) The inspector shall be responsible for ensuring that all items that are disconnected in the conduct of the test procedure are properly re-connected at the conclusion of the test procedure.

(vi) Alternative procedures may be used if they are shown to be equivalent or better to the satisfaction of the Administrator. Except in the case of government-run test facilities claiming sovereign immunity, any damage done to the evaporative emission control system during this test shall be repaired at the expense of the inspection facility.

(11) *Transient emission test.* The transient emission test shall consist of 240 seconds of mass emission measurement using a constant volume sampler while the vehicle is driven through a computer-monitored driving cycle on a dynamometer with inertial weight settings appropriate for the weight of the vehicle. The driving cycle shall include acceleration, deceleration, and idle operating modes as specified in appendix E to this subpart. The 240 second sequence may be ended earlier using fast pass or fast fail algorithms and multiple pass/fail algorithms may be used during the test cycle to eliminate false failures. The transient test procedure, including algorithms and other procedural details, shall be approved by the Administrator prior to use in an I/M program.

(12) *On-board diagnostic checks.* Inspection of the on-board diagnostic system shall be according to the procedure described in 40 CFR 85.2222, at a minimum.

(13) *Approval of alternative tests.* Alternative test procedures may be approved if the Administrator finds that—

(i) Such procedures are in accordance with good engineering practice, including errors of commission (at cutpoints corresponding to equivalent emission reductions) no higher than the tests they would replace;

(ii) Such procedures show a correlation with the Federal Test Procedure (with respect to their ability to detect high emitting vehicles and ensure their effective repair) equal to or better than the tests they would replace; and

(iii) Such procedures would produce equivalent emission reductions in combination with other program elements.

(b) *Test standards*—(1) *Emissions standards.* HC, CO, and $CO+CO_2$ (or CO_2 alone) emission standards shall be applicable to all vehicles subject to the program and repairs shall be required for failure of any standard regardless of the attainment status of the area. NO_X emission standards shall be applied to vehicles subject to a transient test in ozone nonattainment areas and in an ozone transport region, unless a waiver of NO_X controls is provided to the State under § 51.351(d) of this subpart.

(i) *Steady-state short tests.* The steady-state short test emission standards for 1981 and later model year light duty vehicles and light duty trucks shall be at least as stringent as those in appendix C to this subpart.

(ii) *Transient test.* Transient test emission standards shall be established for HC, CO, CO_2, and NO_X for subject vehicles based on model year and vehicle type.

(2) *Visual equipment inspection standards.* (i) Vehicles shall fail visual inspections of subject emission control devices if such devices are part of the original certified configuration and are found to be missing, modified, disconnected, or improperly connected.

(ii) Vehicles shall fail visual inspections of subject emission control devices if such devices are found to be incorrect for the certified vehicle configuration under inspection. Aftermarket parts, as well as original

equipment manufacture parts, may be considered correct if they are proper for the certified vehicle configuration. Where an EPA aftermarket approval or self-certification program exists for a particular class of subject parts, vehicles shall fail visual equipment inspections if the part is neither original equipment manufacture nor from an approved or self-certified aftermarket manufacturer.

(3) *Functional test standards*—(i) *Evaporative system integrity test.* Vehicles shall fail the evaporative system pressure test if the system cannot maintain a system pressure above eight inches of water for up to two minutes after being pressurized to 14±0.5 inches of water or if no pressure drop is detected when the gas cap is loosened as described in paragraph (a)(10)(iv) of this section. Additionally, vehicles shall fail the evaporative test if the canister is missing or obviously damaged, if hoses are missing or obviously disconnected, or if the gas cap is missing.

(ii) *Evaporative canister purge test.* Vehicles with a total purge system flow measuring less than one liter, over the course of the transient test required in paragraph (a)(9) of this section, shall fail the evaporative purge test.

(4) *On-board diagnostics test standards.* Vehicles shall fail the on-board diagnostic test if they fail to meet the requirements of 40 CFR 85.2207, at a minimum. Failure of the on-board diagnostic test need not result in failure of the vehicle inspection/maintenance test until January 1, 2001.

(c) *Fast test algorithms and standards.* Special test algorithms and pass/fail algorithms may be employed to reduce test time when the test outcome is predictable with near certainty, if the Administrator approves by letter the equivalency to full procedure testing.

(d) *Applicability.* In general, section 203(a)(3)(A) of the Clean Air Act prohibits altering a vehicle's configuration such that it changes from a certified to a non-certified configuration. In the inspection process, vehicles that have been altered from their original certified configuration are to be tested in the same manner as other subject vehicles.

(1) Vehicles with engines other than the engine originally installed by the manufacturer or an identical replacement of such engine shall be subject to the test procedures and standards for the chassis type and model year including visual equipment inspections for all parts that are part of the original or now-applicable certified configuration and part of the normal inspection. States may choose to require vehicles with such engines to be subject to the test procedures and standards for the engine model year if it is newer than the chassis model year.

(2) Vehicles that have been switched from an engine of one fuel type to another fuel type that is subject to the program (e.g., from a diesel engine to a gasoline engine) shall be subject to the test procedures and standards for the current fuel type, and to the requirements of paragraph (d)(1) of this section.

(3) Vehicles that are switched to a fuel type for which there is no certified configuration shall be tested according to the most stringent emission standards established for that vehicle type and model year. Emission control device requirements may be waived if the program determines that the alternatively fueled vehicle configuration would meet the new vehicle standards for that model year without such devices.

(4) Mixing vehicle classes (e.g., light-duty with heavy-duty) and certification types (e.g., California with Federal) within a single vehicle configuration shall be considered tampering.

(e) *SIP requirements.* The SIP shall include a description of each test procedure used. The SIP shall include the rule, ordinance or law describing and establishing the test procedures.

[57 FR 52987, Nov. 5, 1992, as amended at 61 FR 40945, Aug. 6, 1996; 63 FR 24433, May 4, 1998]

§ 51.358 Test equipment.

Computerized test systems are required for performing any measurement on subject vehicles.

(a) *Performance features of computerized test systems.* The test equipment shall be certified by the program to

meet the requirements contained in appendix D to this subpart, and newly acquired systems shall be subjected to acceptance test procedures to ensure compliance with program specifications.

(1) Emission test equipment shall be capable of testing all subject vehicles and shall be updated from time to time to accommodate new technology vehicles as well as changes to the program.

(2) At a minimum, emission test equipment:

(i) Shall be automated to the highest degree commercially available to minimize the potential for intentional fraud and/or human error;

(ii) Shall be secure from tampering and/or abuse;

(iii) Shall be based upon written specifications; and

(iv) Shall be capable of simultaneously sampling dual exhaust vehicles.

(3) The vehicle owner or driver shall be provided with a computer-generated record of test results, including all of the items listed in 40 CFR part 85, subpart W as being required on the test record. The test report shall include:

(i) A vehicle description, including license plate number, vehicle identification number, and odometer reading;

(ii) The date and time of test;

(iii) The name or identification number of the individual(s) performing the tests and the location of the test station and lane;

(iv) The type of tests performed, including emission tests, visual checks for the presence of emission control components, and functional, evaporative system checks;

(v) The applicable test standards;

(vi) The test results, including exhaust concentrations and pass/fail results for each mode measured, pass/fail results for evaporative system checks, and which emission control devices inspected were passed, failed, or not applicable;

(vii) A statement indicating the availability of warranty coverage as required in section 207 of the Clean Air Act;

(viii) Certification that tests were performed in accordance with the regulations and, in the case of decentralized programs, the signature of the individual who performed the test; and

(ix) For vehicles that fail the tailpipe emission test, information on the possible causes of the specific pattern of high emission levels found during the test.

(b) *Functional characteristics of computerized test systems.* The test system is composed of emission measurement devices and other motor vehicle test equipment controlled by a computer.

(1) The test system shall automatically:

(i) Make a pass/fail decision for all measurements;

(ii) Record test data to an electronic medium;

(iii) Conduct regular self-testing of recording accuracy;

(iv) Perform electrical calibration and system integrity checks before each test, as applicable; and

(v) Initiate system lockouts for:

(A) Tampering with security aspects of the test system;

(B) Failing to conduct or pass periodic calibration or leak checks;

(C) Failing to conduct or pass the constant volume sampler flow rate check (if applicable);

(D) Failing to conduct or pass any of the dynamometer checks, including coast-down, roll speed and roll distance, power absorption capability, and inertia weight selection checks (if applicable);

(E) Failing to conduct or pass the pressure monitoring device check (if applicable);

(F) Failing to conduct or pass the purge flow metering system check (if applicable); and

(G) A full data recording medium or one that does not pass a cyclical redundancy check.

(2) Test systems in enhanced I/M programs shall include a real-time data link to a host computer that prevents unauthorized multiple initial tests on the same vehicle in a test cycle and to insure test record accuracy.

(3) The test system shall insure accurate data collection by limiting, cross-checking, and/or confirming manual data entry.

(4) *On-board diagnostic test equipment requirements.* The test equipment used

to perform on-board diagnostic inspections shall function as specified in 40 CFR 85.2231.

(c) *SIP requirements.* The SIP shall include written technical specifications for all test equipment used in the program and shall address each of the above requirements. The specifications shall describe the emission analysis process, the necessary test equipment, the required features, and written acceptance testing criteria and procedures.

[57 FR 52987, Nov. 5, 1992, as amended at 61 FR 40945, Aug. 6, 1996]

§ 51.359 Quality control.

Quality control measures shall insure that emission measurement equipment is calibrated and maintained properly, and that inspection, calibration records, and control charts are accurately created, recorded and maintained.

(a) *General requirements.* (1) The practices described in this section and in appendix A to this subpart shall be followed, at a minimum. Alternatives or exceptions to these procedures or frequencies may be approved by the Administrator based on a demonstration, including control chart analysis, of equivalent performance.

(2) Preventive maintenance on all inspection equipment necessary to insure accurate and repeatable operation shall be performed on a periodic basis.

(3) Computerized analyzers shall automatically record quality control check information, lockouts, attempted tampering, and any other recordable circumstances which should be monitored to insure quality control (e.g., service calls).

(b) *Requirements for steady-state emissions testing equipment.* (1) Equipment shall be maintained according to demonstrated good engineering practices to assure test accuracy. The calibration and adjustment requirements in appendix A to this subpart shall apply to all steady-state test equipment. States may adjust calibration schedules and other quality control frequencies by using statistical process control to monitor equipment performance on an ongoing basis.

(2) For analyzers that use ambient air as zero air, provision shall be made to draw the air from outside the inspection bay or lane in which the analyzer is situated.

(3) The analyzer housing shall be constructed to protect the analyzer bench and electrical components from ambient temperature and humidity fluctuations that exceed the range of the analyzer's design specifications.

(4) Analyzers shall automatically purge the analytical system after each test.

(c) *Requirements for transient exhaust emission test equipment.* Equipment shall be maintained according to demonstrated good engineering practices to assure test accuracy. Computer control of quality assurance checks and quality control charts shall be used whenever possible. Exceptions to the procedures and the frequency of the checks described in appendix A of this subpart may be approved by the Administrator based on a demonstration of equivalent performance.

(d) *Requirements for evaporative system functional test equipment.* Equipment shall be maintained according to demonstrated good engineering practices to assure test accuracy. Computer control of quality assurance checks and quality control charts shall be used whenever possible. Exceptions to the procedures and the frequency of the checks described in appendix A of this subpart may be approved by the Administrator based on a demonstration of equivalent performance.

(e) *Document security.* Measures shall be taken to maintain the security of all documents by which compliance with the inspection requirement is established including, but not limited to inspection certificates, waiver certificates, license plates, license tabs, and stickers. This section shall in no way require the use of paper documents but shall apply if they are used by the program for these purposes.

(1) Compliance documents shall be counterfeit resistant. Such measures as the use of special fonts, water marks, ultra-violet inks, encoded magnetic strips, unique bar-coded identifiers, and difficult to acquire materials may be used to accomplish this requirement.

(2) All inspection certificates, waiver certificates, and stickers shall be

printed with a unique serial number and an official program seal.

(3) Measures shall be taken to ensure that compliance documents cannot be stolen or removed without being damaged.

(f) *SIP requirements.* The SIP shall include a description of quality control and record keeping procedures. The SIP shall include the procedure manual, rule, ordinance or law describing and establishing the quality control procedures and requirements.

[57 FR 52987, Nov. 5, 1992, as amended at 58 FR 59367, Nov. 9, 1993]

§ 51.360 Waivers and compliance via diagnostic inspection.

The program may allow the issuance of a waiver, which is a form of compliance with the program requirements that allows a motorist to comply without meeting the applicable test standards, as long as the prescribed criteria described below are met.

(a) *Waiver issuance criteria.* The waiver criteria shall include the following at a minimum.

(1) Waivers shall be issued only after a vehicle has failed a retest performed after all qualifying repairs have been completed. Qualifying repairs include repairs of the emission control components, listed in paragraph (a)(5) of this section, performed within 60 days of the test date.

(2) Any available warranty coverage shall be used to obtain needed repairs before expenditures can be counted towards the cost limits in paragraphs (a)(5) and (a)(6) of this section. The operator of a vehicle within the statutory age and mileage coverage under section 207(b) of the Clean Air Act shall present a written denial of warranty coverage from the manufacturer or authorized dealer for this provision to be waived for approved tests applicable to the vehicle.

(3) Waivers shall not be issued to vehicles for tampering-related repairs. The cost of tampering-related repairs shall not be applicable to the minimum expenditure in paragraphs (a)(5) and (a)(6) of this section. States may issue exemptions for tampering-related repairs if it can be verified that the part in question or one similar to it is no longer available for sale.

(4) Repairs shall be appropriate to the cause of the test failure, and a visual check shall be made to determine if repairs were actually made if, given the nature of the repair, it can be visually confirmed. Receipts shall be submitted for review to further verify that qualifying repairs were performed.

(5) General repairs shall be performed by a recognized repair technician (i.e., one professionally engaged in vehicle repair, employed by a going concern whose purpose is vehicle repair, or possessing nationally recognized certification for emission-related diagnosis and repair) in order to qualify for a waiver. I/M programs may allow the cost of parts (not labor) utilized by non-technicians (e.g., owners) to apply toward the waiver limit. The waiver would apply to the cost of parts for the repair or replacement of the following list of emission control components: oxygen sensor, catalytic converter, thermal reactor, EGR valve, fuel filler cap, evaporative canister, PCV valve, air pump, distributor, ignition wires, coil, and spark plugs. The cost of any hoses, gaskets, belts, clamps, brackets or other accessories directly associated with these components may also be applied to the waiver limit.

(6) In basic programs, a minimum of $75 for pre-81 vehicles and $200 for 1981 and newer vehicles shall be spent in order to qualify for a waiver. These model year cutoffs and the associated dollar limits shall be in full effect no later than January 1, 1998. Prior to January 1, 1998, States may adopt any minimum expenditure commensurate with the waiver rate committed to for the purposes of modeling compliance with the basic I/M performance standard.

(7) Beginning on January 1, 1998, enhanced I/M programs shall require the motorist to make an expenditure of at least $450 in repairs to qualify for a waiver. The I/M program shall provide that the $450 minimum expenditure shall be adjusted in January of each year by the percentage, if any, by which the Consumer Price Index for the preceding calendar year differs from the Consumer Price Index of 1989. Prior to January 1, 1998, States may

adopt any minimum expenditure commensurate with the waiver rate committed to for the purposes of modeling compliance with the relevant enhanced I/M performance standard.

(i) The Consumer Price Index for any calendar year is the average of the Consumer Price Index for all-urban consumers published by the Department of Labor, as of the close of the 12-month period ending on August 31 of each calendar year. A copy of the current Consumer Price Index may be obtained from the Emission Planning and Strategies Division, U.S. Environmental Protection Agency, 2565 Plymouth Road, Ann Arbor, Michigan 48105.

(ii) The revision of the Consumer Price Index which is most consistent with the Consumer Price Index for calendar year 1989 shall be used.

(8) States may establish lower minimum expenditures if a program is established to scrap vehicles that do not meet standards after the lower expe nditure is made.

(9) A time extension, not to exceed the period of the inspection frequency, may be granted to obtain needed repairs on a vehicle in the case of economic hardship when waiver requirements have not been met. After having received a time extension, a vehicle must fully pass the applicable test standards before becoming eligible for another time extension. The extension for a vehicle shall be tracked and reported by the program.

(b) *Compliance via diagnostic inspection.* Vehicles subject to a transient IM240 emission test at the cutpoints established in §§51.351 (f)(7) and (g)(7) of this subpart may be issued a certificate of compliance without meeting the prescribed emission cutpoints, if, after failing a retest on emissions, a complete, documented physical and functional diagnosis and inspection performed by the I/M agency or a contractor to the I/M agency show that no additional emission-related repairs are needed. Any such exemption policy and procedures shall be subject to approval by the Administrator.

(c) *Quality control of waiver issuance.* (1) Enhanced programs shall control waiver issuance and processing by establishing a system of agency-issued waivers. The State may delegate this authority to a single contractor but inspectors in stations and lanes shall not issue waivers. Basic programs may permit inspector-issued waivers as long as quality assurance efforts include a comprehensive review of waiver issuance.

(2) The program shall include methods of informing vehicle owners or lessors of potential warranty coverage, and ways to obtain warranty repairs.

(3) The program shall insure that repair receipts are authentic and cannot be revised or reused.

(4) The program shall insure that waivers are only valid for one test cycle.

(5) The program shall track, manage, and account for time extensions or exemptions so that owners or lessors cannot receive or retain a waiver improperly.

(d) *SIP requirements.* (1) The SIP shall include a maximum waiver rate expressed as a percentage of initially failed vehicles. This waiver rate shall be used for estimating emission reduction benefits in the modeling analysis.

(2) The State shall take corrective action if the waiver rate exceeds that committed to in the SIP or revise the SIP and the emission reductions claimed.

(3) The SIP shall describe the waiver criteria and procedures, including cost limits, quality assurance methods and measures, and administration.

(4) The SIP shall include the necessary legal authority, ordinance, or rules to issue waivers, set and adjust cost limits as required in paragraph (a)(5) of this section, and carry out any other functions necessary to administer the waiver system, including enforcement of the waiver provisions.

[57 FR 52987, Nov. 5, 1992, as amended at 58 FR 59367, Nov. 9, 1993; 60 FR 48036, Sept. 18, 1995]

§51.361 Motorist compliance enforcement.

Compliance shall be ensured through the denial of motor vehicle registration in enhanced I/M programs unless an exception for use of an existing alternative is approved. An enhanced I/M area may use an existing alternative if it demonstrates that the alternative

has been more effective than registration denial. An enforcement mechanism may be considered an ''existing alternative'' only in States that, for some area in the State, had an I/M program with that mechanism in operation prior to passage of the 1990 Amendments to the Act. A basic I/M area may use an alternative enforcement mechanism if it demonstrates that the alternative will be as effective as registration denial. Two other types of enforcement programs may qualify for enhanced I/M programs if demonstrated to have been more effective than enforcement of the registration requirement in the past: Sticker-based enforcement programs and computer-matching programs. States that did not adopt an I/M program for any area of the State before November 15, 1990, may not use an enforcement alternative in connection with an enhanced I/M program required to be adopted after that date.

(a) *Registration denial.* Registration denial enforcement is defined as rejecting an application for initial registration or reregistration of a used vehicle (i.e., a vehicle being registered after the initial retail sale and associated registration) unless the vehicle has complied with the I/M requirement prior to granting the application. Pursuant to section 207(g)(3) of the Act, nothing in this subpart shall be construed to require that new vehicles shall receive emission testing prior to initial retail sale. In designing its enforcement program, the State shall:

(1) Provide an external, readily visible means of determining vehicle compliance with the registration requirement to facilitate enforcement of the program;

(2) Adopt a schedule of testing (either annual or biennial) that clearly determines when a vehicle shall comply prior to registration;

(3) Design a testing certification mechanism (either paper-based or electronic) that shall be used for registration purposes and clearly indicates whether the certification is valid for purposes of registration, including:

(i) Expiration date of the certificate;

(ii) Unambiguous vehicle identification information; and

(iii) Whether the vehicle passed or received a waiver;

(4) Routinely issue citations to motorists with expired or missing license plates, with either no registration or an expired registration, and with no license plate decals or expired decals, and provide for enforcement officials other than police to issue citations (e.g., parking meter attendants) to parked vehicles in noncompliance;

(5) Structure the penalty system to deter non-compliance with the registration requirement through the use of mandatory minimum fines (meaning civil, monetary penalties, in this subpart) constituting a meaningful deterrent and through a requirement that compliance be demonstrated before a case can be closed;

(6) Ensure that evidence of testing is available and checked for validity at the time of a new registration of a used vehicle or registration renewal;

(7) Prevent owners or lessors from avoiding testing through manipulation of the title or registration system; title transfers may re-start the clock on the inspection cycle only if proof of current compliance is required at title transfer;

(8) Prevent the fraudulent initial classification or reclassification of a vehicle from subject to non-subject or exempt by requiring proof of address changes prior to registration record modification, and documentation from the testing program (or delegate) certifying based on a physical inspection that the vehicle is exempt;

(9) Limit and track the use of time extensions of the registration requirement to prevent repeated extensions;

(10) Provide for meaningful penalties for cases of registration fraud;

(11) Limit and track exemptions to prevent abuse of the exemption policy for vehicles claimed to be out-of-state; and

(12) Encourage enforcement of vehicle registration transfer requirements when vehicle owners move into the I/M area by coordinating with local and State enforcement agencies and structuring other activities (e.g., drivers license issuance) to effect registration transfers.

(b) *Alternative enforcement mechanisms*—(1) *General requirements.* The program shall demonstrate that a non-registration-based enforcement program is currently more effective than registration-denial enforcement in enhanced I/M programs or, prospectively, as effective as registration denial in basic programs. The following general requirements shall apply:

(i) For enhanced I/M programs, the area in question shall have had an operating I/M program using the alternative mechanism prior to enactment of the Clean Air Act Amendments of 1990. While modifications to improve compliance may be made to the program that was in effect at the time of enactment, the expected change in effectiveness cannot be considered in determining acceptability;

(ii) The State shall assess the alternative program's effectiveness, as well as the current effectiveness of the registration system, including the following:

(A) Determine the number and percentage of vehicles subject to the I/M program that were in compliance with the program over the course of at least one test cycle; and

(B) Determine the number and fraction of the same group of vehicles as in paragraph (b)(1)(ii)(A) of this section that were in compliance with the registration requirement over the same period. Late registration shall not be considered non-compliance for the purposes of this determination. The precise definition of late registration versus a non-complying vehicle shall be explained and justified in the SIP;

(iii) An alternative mechanism shall be considered more effective if the fraction of vehicles complying with the existing program, as determined according to the requirements of this section, is greater than the fraction of vehicles complying with the registration requirement. An alternative mechanism is as effective if the fraction complying with the program is at least equal to the fraction complying with the registration requirement.

(2) *Sticker-based enforcement.* In addition to the general requirements, a sticker-based enforcement program shall demonstrate that the enforcement mechanism will swiftly and effectively prevent operation of subject vehicles that fail to comply. Such demonstration shall include the following:

(i) An assessment of the current extent of the following forms of non-compliance and demonstration that mechanisms exist to keep such non-compliance within acceptable limits:

(A) Use of stolen, counterfeit, or fraudulently obtained stickers;

(B) In States with safety inspections, the use of ''Safety Inspection Only'' stickers on vehicles that should be subject to the I/M requirement as well; and

(C) Operation of vehicles with expired stickers, including a stratification of non-compliance by length of non-compliance and model year.

(ii) The program as currently implemented or as proposed to be improved shall also:

(A) Require an easily observed external identifier such as the county name on the license plate, an obviously unique license plate tab, or other means that shows whether or not a vehicle is subject to the I/M requirement;

(B) Require an easily observed external identifier, such as a windshield sticker or license plate tab that shows whether a subject vehicle is in compliance with the inspection requirement;

(C) Impose monetary fines at least as great as the estimated cost of compliance with I/M requirements (e.g., test fee plus minimum waiver expenditure) for the absence of such identifiers;

(D) Require that such identifiers be of a quality that makes them difficult to counterfeit, difficult to remove without destroying once installed, and durable enough to last until the next inspection without fading, peeling, or other deterioration;

(E) Perform surveys in a variety of locations and at different times for the presence of the required identifiers such that at least 10% of the vehicles or 10,000 vehicles (whichever is less) in the subject vehicle population are sampled each year;

(F) Track missing identifiers for all inspections performed at each station, with stations being held accountable for all such identifiers they are issued; and

(G) Assess and collect significant fines for each identifier that is unaccounted for by a station.

(3) *Computer matching.* In addition to the general requirements, computer-matching programs shall demonstrate that the enforcement mechanism will swiftly and effectively prevent operation of subject vehicles that fail to comply. Such demonstration shall:

(i) Require an expeditious system that results in at least 90% of the subject vehicles in compliance within 4 months of the compliance deadline;

(ii) Require that subject vehicles be given compliance deadlines based on the regularly scheduled test date, not the date of previous compliance;

(iii) Require that motorists pay monetary fines at least as great as the estimated cost of compliance with I/M requirements (e.g., test fee plus minimum waiver expenditure) for the continued operation of a noncomplying vehicle beyond 4 months of the deadline;

(iv) Require that continued non-compliance will eventually result in preventing operation of the non-complying vehicle (no later than the date of the next test cycle) through, at a minimum, suspension of vehicle registration and subsequent denial of re-registration;

(v) Demonstrate that the computer system currently in use is adequate to store and manipulate the I/M vehicle database, generate computerized notices, and provide regular backup to said system while maintaining auxiliary storage devices to insure ongoing operation of the system and prevent data losses;

(vi) Track each vehicle through the steps taken to ensure compliance, including:

(A) The compliance deadline;

(B) The date of initial notification;

(C) The dates warning letters are sent to non-complying vehicle owners;

(D) The dates notices of violation or other penalty notices are sent; and

(E) The dates and outcomes of other steps in the process, including the final compliance date;

(vii) Compile and report monthly summaries including statistics on the percentage of vehicles at each stage in the enforcement process; and

(viii) Track the number and percentage of vehicles initially identified as requiring testing but which are never tested as a result of being junked, sold to a motorist in a non-I/M program area, or for some other reason.

(c) *SIP requirements.* (1) The SIP shall provide information concerning the enforcement process, including:

(i) A description of the existing compliance mechanism if it is to be used in the future and the demonstration that it is as effective or more effective than registration-denial enforcement;

(ii) An identification of the agencies responsible for performing each of the applicable activities in this section;

(iii) A description of and accounting for all classes of exempt vehicles; and

(iv) A description of the plan for testing fleet vehicles, rental car fleets, leased vehicles, and any other subject vehicles, e.g., those operated in (but not necessarily registered in) the program area.

(2) The SIP shall include a determination of the current compliance rate based on a study of the system that includes an estimate of compliance losses due to loopholes, counterfeiting, and unregistered vehicles. Estimates of the effect of closing such loopholes and otherwise improving the enforcement mechanism shall be supported with detailed analyses.

(3) The SIP shall include the legal authority to implement and enforce the program.

(4) The SIP shall include a commitment to an enforcement level to be used for modeling purposes and to be maintained, at a minimum, in practice.

[57 FR 52987, Nov. 5, 1992, as amended at 61 FR 49682, Sept. 23, 1996]

§ 51.362 Motorist compliance enforcement program oversight.

The enforcement program shall be audited regularly and shall follow effective program management practices, including adjustments to improve operation when necessary.

(a) *Quality assurance and quality control.* A quality assurance program shall be implemented to insure effective overall performance of the enforcement system. Quality control procedures are required to instruct individuals in the enforcement process regarding how to properly conduct their activities. At a minimum, the quality control and quality assurance program shall include:

(1) Verification of exempt vehicle status by inspecting and confirming such vehicles by the program or its delegate;

(2) Facilitation of accurate critical test data and vehicle identifier collection through the use of automatic data capture systems such as bar-code scanners or optical character readers, or through redundant data entry;

(3) Maintenance of an audit trail to allow for the assessment of enforcement effectiveness;

(4) Establishment of written procedures for personnel directly engaged in I/M enforcement activities;

(5) Establishment of written procedures for personnel engaged in I/M document handling and processing, such as registration clerks or personnel involved in sticker dispensing and waiver processing, as well as written procedures for the auditing of their performance;

(6) Follow-up validity checks on out-of-area or exemption-triggering registration changes;

(7) Analysis of registration-change applications to target potential violators;

(8) A determination of enforcement program effectiveness through periodic audits of test records and program compliance documentation;

(9) Enforcement procedures for disciplining, retraining, or removing enforcement personnel who deviate from established requirements, or in the case of non-government entities that process registrations, for defranchising, revoking or otherwise discontinuing the activity of the entity issuing registrations; and

(10) The prevention of fraudulent procurement or use of inspection documents by controlling and tracking document distribution and handling, and making stations financially liable for missing or unaccounted for documents by assessing monetary fines reflecting the ''street value'' of these documents (i.e., the test fee plus the minimum waiver expenditure).

(b) *Information management.* In establishing an information base to be used in characterizing, evaluating, and enforcing the program, the State shall:

(1) Determine the subject vehicle population;

(2) Permit EPA audits of the enforcement process;

(3) Assure the accuracy of registration and other program document files;

(4) Maintain and ensure the accuracy of the testing database through periodic internal and/or third-party review; through automated or redundant data entry; and, through automated analysis for valid alpha-numeric sequences of the vehicle identification number (VIN), certificate number, or license plate number;

(5) Compare the testing database to the registration database to determine program effectiveness, establish compliance rates, and to trigger potential enforcement action against non-complying motorists; and

(6) Sample the fleet as a determination of compliance through parking lot surveys, road-side pull-overs, or other in-use vehicle measurements.

(c) *SIP requirements.* The SIP shall include a description of enforcement program oversight and information management activities.

§ 51.363 Quality assurance.

An ongoing quality assurance program shall be implemented to discover, correct and prevent fraud, waste, and abuse and to determine whether procedures are being followed, are adequate, whether equipment is measuring accurately, and whether other problems might exist which would impede program performance. The quality assurance and quality control procedures shall be periodically evaluated to assess their effectiveness and relevance in achieving program goals.

(a) *Performance audits.* Performance audits shall be conducted on a regular basis to determine whether inspectors are correctly performing all tests and other required functions. Performance audits shall be of two types: overt and covert, and shall include:

(1) Performance audits based upon written procedures and results shall be reported using either electronic or written forms to be retained in the inspector and station history files, with sufficient detail to support either an administrative or civil hearing;

(2) Performance audits in addition to regularly programmed audits for stations employing inspectors suspected

of violating regulations as a result of audits, data analysis, or consumer complaints;

(3) Overt performance audits shall be performed at least twice per year for each lane or test bay and shall include:

(i) A check for the observance of appropriate document security;

(ii) A check to see that required record keeping practices are being followed;

(iii) A check for licenses or certificates and other required display information; and

(iv) Observation and written evaluation of each inspector's ability to properly perform an inspection;

(4) Covert performance audits shall include:

(i) Remote visual observation of inspector performance, which may include the use of aids such as binoculars or video cameras, at least once per year per inspector in high-volume stations (i.e., those performing more than 4000 tests per year);

(ii) Site visits at least once per year per number of inspectors using covert vehicles set to fail (this requirement sets a minimum level of activity, not a requirement that each inspector be involved in a covert audit);

(iii) For stations that conduct both testing and repairs, at least one covert vehicle visit per station per year including the purchase of repairs and subsequent retesting if the vehicle is initially failed for tailpipe emissions (this activity may be accomplished in conjunction with paragraph (a)(4)(ii) of this section but must involve each station at least once per year);

(iv) Documentation of the audit, including vehicle condition and preparation, sufficient for building a legal case and establishing a performance record;

(v) Covert vehicles covering the range of vehicle technology groups (e.g., carbureted and fuel-injected vehicles) included in the program, including a full range of introduced malfunctions covering the emission test, the evaporative system tests, and emission control component checks (as applicable);

(vi) Sufficient numbers of covert vehicles and auditors to allow for frequent rotation of both to prevent detection by station personnel; and

(vii) Access to on-line inspection databases by State personnel to permit the creation and maintenance of covert vehicle records.

(b) *Record audits.* Station and inspector records shall be reviewed or screened at least monthly to assess station performance and identify problems that may indicate potential fraud or incompetence. Such review shall include:

(1) Software-based, computerized analysis to identify statistical inconsistencies, unusual patterns, and other discrepancies;

(2) Visits to inspection stations to review records not already covered in the electronic analysis (if any); and

(3) Comprehensive accounting for all official forms that can be used to demonstrate compliance with the program.

(c) *Equipment audits.* During overt site visits, auditors shall conduct quality control evaluations of the required test equipment, including (where applicable):

(1) A gas audit using gases of known concentrations at least as accurate as those required for regular equipment quality control and comparing these concentrations to actual readings;

(2) A check for tampering, worn instrumentation, blocked filters, and other conditions that would impede accurate sampling;

(3) A check for critical flow in critical flow CVS units;

(4) A check of the Constant Volume Sampler flow calibration;

(5) A check for the optimization of the Flame Ionization Detection fuel-air ratio using methane;

(6) A leak check;

(7) A check to determine that station gas bottles used for calibration purposes are properly labelled and within the relevant tolerances;

(8) Functional dynamometer checks addressing coast-down, roll speed and roll distance, inertia weight selection, and power absorption;

(9) A check of the system's ability to accurately detect background pollutant concentrations;

(10) A check of the pressure monitoring devices used to perform the evaporative canister pressure test; and

(11) A check of the purge flow metering system.

(d) *Auditor training and proficiency.* (1) Auditors shall be formally trained and knowledgeable in:

(i) The use of analyzers;

(ii) Program rules and regulations;

(iii) The basics of air pollution control;

(iv) Basic principles of motor vehicle engine repair, related to emission performance;

(v) Emission control systems;

(vi) Evidence gathering;

(vii) State administrative procedures laws;

(viii) Quality assurance practices; and

(ix) Covert audit procedures.

(2) Auditors shall themselves be audited at least once annually.

(3) The training and knowledge requirements in paragraph (d)(1) of this section may be waived for temporary auditors engaged solely for the purpose of conducting covert vehicle runs.

(e) *SIP requirements.* The SIP shall include a description of the quality assurance program, and written procedures manuals covering both overt and covert performance audits, record audits, and equipment audits. This requirement does not include materials or discussion of details of enforcement strategies that would ultimately hamper the enforcement process.

§ 51.364 Enforcement against contractors, stations and inspectors.

Enforcement against licensed stations or contractors, and inspectors shall include swift, sure, effective, and consistent penalties for violation of program requirements.

(a) *Imposition of penalties.* A penalty schedule shall be developed that establishes minimum penalties for violations of program rules and procedures.

(1) The schedule shall categorize and list violations and the minimum penalties to be imposed for first, second, and subsequent violations and for multiple violation of different requirements. In the case of contracted systems, the State may use compensation retainage in lieu of penalties.

(2) Substantial penalties or retainage shall be imposed on the first offense for violations that directly affect emission reduction benefits. At a minimum, in test-and-repair programs inspector and station license suspension shall be imposed for at least 6 months whenever a vehicle is intentionally improperly passed for any required portion of the test. In test-only programs, inspectors shall be removed from inspector duty for at least 6 months (or a retainage penalty equivalent to the inspector's salary for that period shall be imposed).

(3) All findings of serious violations of rules or procedural requirements shall result in mandatory fines or retainage. In the case of gross neglect, a first offense shall result in a fine or retainage of no less than $100 or 5 times the inspection fee, whichever is greater, for the contractor or the licensed station, and the inspector if involved.

(4) Any finding of inspector incompetence shall result in mandatory training before inspection privileges are restored.

(5) License or certificate suspension or revocation shall mean the individual is barred from direct or indirect involvement in any inspection operation during the term of the suspension or revocation.

(b) *Legal authority.* (1) The quality assurance officer shall have the authority to temporarily suspend station and inspector licenses or certificates (after approval of a superior) immediately upon finding a violation or equipment failure that directly affects emission reduction benefits, pending a hearing when requested. In the case of immediate suspension, a hearing shall be held within fourteen calendar days of a written request by the station licensee or the inspector. Failure to hold a hearing within 14 days when requested shall cause the suspension to lapse. In the event that a State's constitution precludes such a temporary license suspension, the enforcement system shall be designed with adequate resources and mechanisms to hold a hearing to suspend or revoke the station or inspector license within three station business days of the finding.

(2) The oversight agency shall have the authority to impose penalties against the licensed station or contractor, as well as the inspector, even if the licensee or contractor had no direct knowledge of the violation but was

found to be careless in oversight of inspectors or has a history of violations. Contractors and licensees shall be held fully responsible for inspector performance in the course of duty.

(c) *Recordkeeping.* The oversight agency shall maintain records of all warnings, civil fines, suspensions, revocations, and violations and shall compile statistics on violations and penalties on an annual basis.

(d) *SIP requirements.* (1) The SIP shall include the penalty schedule and the legal authority for establishing and imposing penalties, civil fines, license suspension, and revocations.

(2) In the case of State constitutional impediments to immediate suspension authority, the State Attorney General shall furnish an official opinion for the SIP explaining the constitutional impediment as well as relevant case law.

(3) The SIP shall describe the administrative and judicial procedures and responsibilities relevant to the enforcement process, including which agencies, courts, and jurisdictions are involved; who will prosecute and adjudicate cases; and other aspects of the enforcement of the program requirements, the resources to be allocated to this function, and the source of those funds. In States without immediate suspension authority, the SIP shall demonstrate that sufficient resources, personnel, and systems are in place to meet the three day case management requirement for violations that directly affect emission reductions.

(e) Alternative quality assurance procedures or frequencies that achieve equivalent or better results may be approved by the Administrator. Statistical process control shall be used whenever possible to demonstrate the efficacy of alternatives.

(f) Areas that qualify for and choose to implement an OTR low enhanced I/M program, as established in § 51.351(h), and that claim in their SIP less emission reduction credit than the basic performance standard for one or more pollutants, are not required to meet the oversight specifications of this section.

[57 FR 52987, Nov. 5, 1992, as amended at 61 FR 39037, July 25, 1996]

§ 51.365 Data collection.

Accurate data collection is essential to the management, evaluation, and enforcement of an I/M program. The program shall gather test data on individual vehicles, as well as quality control data on test equipment.

(a) *Test data.* The goal of gathering test data is to unambiguously link specific test results to a specific vehicle, I/M program registrant, test site, and inspector, and to determine whether or not the correct testing parameters were observed for the specific vehicle in question. In turn, these data can be used to distinguish complying and noncomplying vehicles as a result of analyzing the data collected and comparing it to the registration database, to screen inspection stations and inspectors for investigation as to possible irregularities, and to help establish the overall effectiveness of the program. At a minimum, the program shall collect the following with respect to each test conducted:

(1) Test record number;

(2) Inspection station and inspector numbers;

(3) Test system number;

(4) Date of the test;

(5) Emission test start time and the time final emission scores are determined;

(6) Vehicle Identification Number;

(7) License plate number;

(8) Test certificate number;

(9) Gross Vehicle Weight Rating (GVWR);

(10) Vehicle model year, make, and type;

(11) Number of cylinders or engine displacement;

(12) Transmission type;

(13) Odometer reading;

(14) Category of test performed (i.e., initial test, first retest, or subsequent retest);

(15) Fuel type of the vehicle (i.e., gas, diesel, or other fuel);

(16) Type of vehicle preconditioning performed (if any);

(17) Emission test sequence(s) used;

(18) Hydrocarbon emission scores and standards for each applicable test mode;

(19) Carbon monoxide emission scores and standards for each applicable test mode;

(20) Carbon dioxide emission scores ($CO+CO_2$) and standards for each applicable test mode;

(21) Nitrogen oxides emission scores and standards for each applicable test mode;

(22) Results (Pass/Fail/Not Applicable) of the applicable visual inspections for the catalytic converter, air system, gas cap, evaporative system, positive crankcase ventilation (PCV) valve, fuel inlet restrictor, and any other visual inspection for which emission reduction credit is claimed;

(23) Results of the evaporative system pressure test expressed as a pass or fail;

(24) Results of the evaporative system purge test expressed as a pass or fail along with the total purge flow in liters achieved during the test; and

(25) Results of the on-board diagnostic check expressed as a pass or fail along with the diagnostic trouble codes revealed.

(b) *Quality control data.* At a minimum, the program shall gather and report the results of the quality control checks required under §51.359 of this subpart, identifying each check by station number, system number, date, and start time. The data report shall also contain the concentration values of the calibration gases used to perform the gas characterization portion of the quality control checks.

[57 FR 52987, Nov. 5, 1992, as amended at 61 FR 40945, Aug. 6, 1996]

§51.366 Data analysis and reporting.

Data analysis and reporting are required to allow for monitoring and evaluation of the program by program management and EPA, and shall provide information regarding the types of program activities performed and their final outcomes, including summary statistics and effectiveness evaluations of the enforcement mechanism, the quality assurance system, the quality control program, and the testing element. Initial submission of the following annual reports shall commence within 18 months of initial implementation of the program as required by §51.373 of this subpart. The biennial report shall commence within 30 months of initial implementation of the program as required by §51.373 of this subpart.

(a) *Test data report.* The program shall submit to EPA by July of each year a report providing basic statistics on the testing program for January through December of the previous year, including:

(1) The number of vehicles tested by model year and vehicle type;

(2) By model year and vehicle type, the number and percentage of vehicles:

(i) Failing the emissions test initially;

(ii) Failing each emission control component check initially;

(iii) Failing the evaporative system functional and integrity checks initially;

(iv) Failing the first retest for tailpipe emissions;

(v) Passing the first retest for tailpipe emissions;

(vi) Initially failed vehicles passing the second or subsequent retest for tailpipe emissions;

(vii) Initially failed vehicles passing each emission control component check on the first or subsequent retest by component;

(viii) Initially failed vehicles passing the evaporative system functional and integrity checks on the first or subsequent retest by component;

(ix) Initially failed vehicles receiving a waiver;

(x) Vehicles with no known final outcome (regardless of reason);

(xi) Passing the on-board diagnostic check and failing the I/M emission test;

(xii) Failing the on-board diagnostic check and passing the I/M emission test;

(xiii) Passing both the on-board diagnostic check and I/M emission test;

(xiv) Failing both the on-board diagnostic check and I/M emission test;

(xv) Passing the on-board diagnostic check and failing the I/M evaporative test;

(xvi) Failing the on-board diagnostic check and passing the I/M evaporative test;

(xvii) Passing both the on-board diagnostic check and I/M evaporative test;

(xviii) Failing both the on-board diagnostic check and I/M evaporative test;

(xix) MIL is commanded on and no codes are stored;

(xx) MIL is not commanded on and codes are stored;

(xxi) MIL is commanded on and codes are stored;

(xxii) MIL is not commanded on and codes are not stored;

(xxiii) Readiness status indicates that the evaluation is not complete for any module supported by on-board diagnostic systems;

(3) The initial test volume by model year and test station;

(4) The initial test failure rate by model year and test station; and

(5) The average increase or decrease in tailpipe emission levels for HC, CO, and NO_X (if applicable) after repairs by model year and vehicle type for vehicles receiving a mass emissions test.

(b) *Quality assurance report.* The program shall submit to EPA by July of each year a report providing basic statistics on the quality assurance program for January through December of the previous year, including:

(1) The number of inspection stations and lanes:

(i) Operating throughout the year; and

(ii) Operating for only part of the year;

(2) The number of inspection stations and lanes operating throughout the year:

(i) Receiving overt performance audits in the year;

(ii) Not receiving overt performance audits in the year;

(iii) Receiving covert performance audits in the year;

(iv) Not receiving covert performance audits in the year; and

(v) That have been shut down as a result of overt performance audits;

(3) The number of covert audits:

(i) Conducted with the vehicle set to fail the emission test;

(ii) Conducted with the vehicle set to fail the component check;

(iii) Conducted with the vehicle set to fail the evaporative system checks;

(iv) Conducted with the vehicle set to fail any combination of two or more of the above checks;

(v) Resulting in a false pass for emissions;

(vi) Resulting in a false pass for component checks;

(vii) Resulting in a false pass for the evaporative system check; and

(viii) Resulting in a false pass for any combination of two or more of the above checks;

(4) The number of inspectors and stations:

(i) That were suspended, fired, or otherwise prohibited from testing as a result of covert audits;

(ii) That were suspended, fired, or otherwise prohibited from testing for other causes; and

(iii) That received fines;

(5) The number of inspectors licensed or certified to conduct testing;

(6) The number of hearings:

(i) Held to consider adverse actions against inspectors and stations; and

(ii) Resulting in adverse actions against inspectors and stations;

(7) The total amount collected in fines from inspectors and stations by type of violation;

(8) The total number of covert vehicles available for undercover audits over the year; and

(9) The number of covert auditors available for undercover audits.

(c) *Quality control report.* The program shall submit to EPA by July of each year a report providing basic statistics on the quality control program for January through December of the previous year, including:

(1) The number of emission testing sites and lanes in use in the program;

(2) The number of equipment audits by station and lane;

(3) The number and percentage of stations that have failed equipment audits; and

(4) Number and percentage of stations and lanes shut down as a result of equipment audits.

(d) *Enforcement report.* (1) All varieties of enforcement programs shall, at a minimum, submit to EPA by July of each year a report providing basic statistics on the enforcement program for January through December of the previous year, including:

(i) An estimate of the number of vehicles subject to the inspection program, including the results of an analysis of the registration data base;

(ii) The percentage of motorist compliance based upon a comparison of the number of valid final tests with the number of subject vehicles;

(iii) The total number of compliance documents issued to inspection stations;

(iv) The number of missing compliance documents;

(v) The number of time extensions and other exemptions granted to motorists; and

(vi) The number of compliance surveys conducted, number of vehicles surveyed in each, and the compliance rates found.

(2) Registration denial based enforcement programs shall provide the following additional information:

(i) A report of the program's efforts and actions to prevent motorists from falsely registering vehicles out of the program area or falsely changing fuel type or weight class on the vehicle registration, and the results of special studies to investigate the frequency of such activity; and

(ii) The number of registration file audits, number of registrations reviewed, and compliance rates found in such audits.

(3) Computer-matching based enforcement programs shall provide the following additional information:

(i) The number and percentage of subject vehicles that were tested by the initial deadline, and by other milestones in the cycle;

(ii) A report on the program's efforts to detect and enforce against motorists falsely changing vehicle classifications to circumvent program requirements, and the frequency of this type of activity; and

(iii) The number of enforcement system audits, and the error rate found during those audits.

(4) Sticker-based enforcement systems shall provide the following additional information:

(i) A report on the program's efforts to prevent, detect, and enforce against sticker theft and counterfeiting, and the frequency of this type of activity;

(ii) A report on the program's efforts to detect and enforce against motorists falsely changing vehicle classifications to circumvent program requirements, and the frequency of this type of activity; and

(iii) The number of parking lot sticker audits conducted, the number of vehicles surveyed in each, and the noncompliance rate found during those audits.

(e) *Additional reporting requirements.* In addition to the annual reports in paragraphs (a) through (d) of this section, programs shall submit to EPA by July of every other year, biennial reports addressing:

(1) Any changes made in program design, funding, personnel levels, procedures, regulations, and legal authority, with detailed discussion and evaluation of the impact on the program of all such changes; and

(2) Any weaknesses or problems identified in the program within the two-year reporting period, what steps have already been taken to correct those problems, the results of those steps, and any future efforts planned.

(f) *SIP requirements.* The SIP shall describe the types of data to be collected.

[57 FR 52987, Nov. 5, 1992, as amended at 61 FR 40945, Aug. 6, 1996]

§51.367 Inspector training and licensing or certification.

All inspectors shall receive formal training and be licensed or certified to perform inspections.

(a) *Training.* (1) Inspector training shall impart knowledge of the following:

(i) The air pollution problem, its causes and effects;

(ii) The purpose, function, and goal of the inspection program;

(iii) Inspection regulations and procedures;

(iv) Technical details of the test procedures and the rationale for their design;

(v) Emission control device function, configuration, and inspection;

(vi) Test equipment operation, calibration, and maintenance;

(vii) Quality control procedures and their purpose;

(viii) Public relations; and

(ix) Safety and health issues related to the inspection process.

(2) If inspector training is not administered by the program, the responsible

State agency shall monitor and evaluate the training program delivery.

(3) In order to complete the training requirement, a trainee shall pass (i.e., a minimum of 80% of correct responses or lower if an occupational analysis justifies it) a written test covering all aspects of the training. In addition, a hands-on test shall be administered in which the trainee demonstrates without assistance the ability to conduct a proper inspection, to properly utilize equipment and to follow other procedures. Inability to properly conduct all test procedures shall constitute failure of the test. The program shall take appropriate steps to insure the security and integrity of the testing process.

(b) *Licensing and certification.* (1) All inspectors shall be either licensed by the program (in the case of test-and-repair systems that do not use contracts with stations) or certified by an organization other than the employer (in test-only programs and test-and-repair programs that require station owners to enter into contracts with the State) in order to perform official inspections.

(2) Completion of inspector training and passing required tests shall be a condition of licensing or certification.

(3) Inspector licenses and certificates shall be valid for no more than 2 years, at which point refresher training and testing shall be required prior to renewal. Alternative approaches based on more comprehensive skill examination and determination of inspector competency may be used.

(4) Licenses or certificates shall not be considered a legal right but rather a privilege bestowed by the program conditional upon adherence to program requirements.

(c) *SIP requirements.* The SIP shall include a description of the training program, the written and hands-on tests, and the licensing or certification process.

§ 51.368 Public information and consumer protection.

(a) *Public awareness.* The SIP shall include a plan for informing the public on an ongoing basis throughout the life of the I/M program of the air quality problem, the requirements of Federal and State law, the role of motor vehicles in the air quality problem, the need for and benefits of an inspection program, how to maintain a vehicle in a low-emission condition, how to find a qualified repair technician, and the requirements of the I/M program. Motorists that fail the I/M test in enhanced I/M areas shall be offered a list of repair facilities in the area and information on the results of repairs performed by repair facilities in the area, as described in § 51.369(b)(1) of this subpart. Motorists that fail the I/M test shall also be provided with software-generated, interpretive diagnostic information based on the particular portions of the test that were failed.

(b) *Consumer protection.* The oversight agency shall institute procedures and mechanisms to protect the public from fraud and abuse by inspectors, mechanics, and others involved in the I/M program. This shall include a challenge mechanism by which a vehicle owner can contest the results of an inspection. It shall include mechanisms for protecting whistle blowers and following up on complaints by the public or others involved in the process. It shall include a program to assist owners in obtaining warranty covered repairs for eligible vehicles that fail a test. The SIP shall include a detailed consumer protection plan.

§ 51.369 Improving repair effectiveness.

Effective repairs are the key to achieving program goals and the State shall take steps to ensure the capability exists in the repair industry to repair vehicles that fail I/M tests.

(a) *Technical assistance.* The oversight agency shall provide the repair industry with information and assistance related to vehicle inspection diagnosis and repair.

(1) The agency shall regularly inform repair facilities of changes in the inspection program, training course schedules, common problems being found with particular engine families, diagnostic tips and the like.

(2) The agency shall provide a hot line service to assist repair technicians with specific repair problems, answer technical questions that arise in the repair process, and answer questions related to the legal requirements of State and Federal law with regard to

emission control device tampering, engine switching, or similar issues.

(b) *Performance monitoring.* (1) In enhanced I/M program areas, the oversight agency shall monitor the performance of individual motor vehicle repair facilities, and provide to the public at the time of initial failure, a summary of the performance of local repair facilities that have repaired vehicles for retest. Performance monitoring shall include statistics on the number of vehicles submitted for a retest after repair by the repair facility, the percentage passing on first retest, the percentage requiring more than one repair/retest trip before passing, and the percentage receiving a waiver. Programs may provide motorists with alternative statistics that convey similar information on the relative ability of repair facilities in providing effective and convenient repair, in light of the age and other characteristics of vehicles presented for repair at each facility.

(2) Programs shall provide feedback, including statistical and qualitative information to individual repair facilities on a regular basis (at least annually) regarding their success in repairing failed vehicles.

(3) A prerequisite for a retest shall be a completed repair form that indicates which repairs were performed, as well as any technician recommended repairs that were not performed, and identification of the facility that performed the repairs.

(c) *Repair technician training.* The State shall assess the availability of adequate repair technician training in the I/M area and, if the types of training described in paragraphs (c)(1) through (4) of this section are not currently available, shall insure that training is made available to all interested individuals in the community either through private or public facilities. This may involve working with local community colleges or vocational schools to add curricula to existing programs or start new programs or it might involve attracting private training providers to offer classes in the area. The training available shall include:

(1) Diagnosis and repair of malfunctions in computer controlled, close-loop vehicles;

(2) The application of emission control theory and diagnostic data to the diagnosis and repair of failures on the transient emission test and the evaporative system functional checks;

(3) Utilization of diagnostic information on systematic or repeated failures observed in the transient emission test and the evaporative system functional checks; and

(4) General training on the various subsystems related to engine emission control.

(d) *SIP requirements.* The SIP shall include a description of the technical assistance program to be implemented, a description of the procedures and criteria to be used in meeting the performance monitoring requirements of this section, and a description of the repair technician training resources available in the community.

§ 51.370 Compliance with recall notices.

States shall establish methods to ensure that vehicles subject to enhanced I/M and that are included in either a ''Voluntary Emissions Recall'' as defined at 40 CFR 85.1902(d), or in a remedial plan determination made pursuant to section 207(c) of the Act, receive the required repairs. States shall require that owners of recalled vehicles have the necessary recall repairs completed, either in order to complete an annual or biennial inspection process or to obtain vehicle registration renewal. All recalls for which owner notification occurs after January 1, 1995 shall be included in the enhanced I/M recall requirement.

(a) *General requirements.* (1) The State shall have an electronic means to identify recalled vehicles based on lists of VINs with unresolved recalls made available by EPA, the vehicle manufacturers, or a third party supplier approved by the Administrator. The State shall update its list of unresolved recalls on a quarterly basis at a minimum.

(2) The State shall require owners or lessees of vehicles with unresolved recalls to show proof of compliance with

recall notices in order to complete either the inspection or registration cycle.

(3) Compliance shall be required on the next registration or inspection date, allowing a reasonable period to comply, after notification of recall was received by the State.

(b) *Enforcement.* (1) A vehicle shall either fail inspection or be denied vehicle registration if the required recall repairs have not been completed.

(2) In the case of vehicles obtaining recall repairs but remaining on the updated list provided in paragraph (a)(1) of this section, the State shall have a means of verifying completion of the required repairs; electronic records or paper receipts provided by the authorized repair facility shall be required. The vehicle inspection or registration record shall be modified to include (or be supplemented with other VIN-linked records which include) the recall campaign number(s) and the date(s) repairs were performed. Documentation verifying required repairs shall include the following:

(i) The VIN, make, and model year of the vehicle; and

(ii) The recall campaign number and the date repairs were completed.

(c) *Reporting requirements.* The State shall submit to EPA, by July of each year for the previous calendar year, an annual report providing the following information:

(1) The number of vehicles in the I/M area initially listed as having unresolved recalls, segregated by recall campaign number;

(2) The number of recalled vehicles brought into compliance by owners;

(3) The number of listed vehicles with unresolved recalls that, as of the end of the calendar year, were not yet due for inspection or registration;

(4) The number of recalled vehicles still in non-compliance that have either failed inspection or been denied registration on the basis of non-compliance with recall; and

(5) The number of recalled vehicles that are otherwise not in compliance.

(d) *SIP submittals.* The SIP shall describe the procedures used to incorporate the vehicle lists provided in paragraph (a)(1) of this section into the inspection or registration database, the quality control methods used to insure that recall repairs are properly documented and tracked, and the method (inspection failure or registration denial) used to enforce the recall requirements.

§ 51.371 On-road testing.

On-road testing is defined as the measurement of HC, CO, NO_X, and/or CO_2 emissions on any road or roadside in the nonattainment area or the I/M program area. On-road testing is required in enhanced I/M areas and is an option for basic I/M areas.

(a) *General requirements.* (1) On-road testing is to be part of the emission testing system, but is to be a complement to testing otherwise required.

(2) On-road testing is not required in every season or on every vehicle but shall evaluate the emission performance of 0.5% of the subject fleet statewide or 20,000 vehicles, whichever is less, including any vehicles that may be subject to the follow-up inspection provisions of paragraph (a)(4) of this section, each inspection cycle.

(3) The on-road testing program shall provide information about the emission performance of in-use vehicles, by measuring on-road emissions through the use of remote sensing devices or roadside pullovers including tailpipe emission testing. The program shall collect, analyze and report on-road testing data.

(4) Owners of vehicles that have previously been through the normal periodic inspection and passed the final retest and found to be high emitters shall be notified that the vehicles are required to pass an out-of-cycle follow-up inspection; notification may be by mailing in the case of remote sensing on-road testing or through immediate notification if roadside pullovers are used.

(b) *SIP requirements.* (1) The SIP shall include a detailed description of the on-road testing program, including the types of testing, test limits and criteria, the number of vehicles (the percentage of the fleet) to be tested, the number of employees to be dedicated to the on-road testing effort, the methods for collecting, analyzing, utilizing, and reporting the results of on-road testing

and, the portion of the program budget to be dedicated to on-road testing.

(2) The SIP shall include the legal authority necessary to implement the on-road testing program, including the authority to enforce off-cycle inspection and repair requirements.

(3) Emission reduction credit for on-road testing programs shall be granted for a program designed to obtain significant emission reductions over and above those already predicted to be achieved by other aspects of the I/M program. The SIP shall include technical support for the claimed additional emission reductions.

§51.372 State Implementation Plan submissions.

(a) *SIP submittals.* The SIP shall address each of the elements covered in this subpart, including, but not limited to:

(1) A schedule of implementation of the program including interim milestones leading to mandatory testing. The milestones shall include, at a minimum:

(i) Passage of enabling statutory or other legal authority;

(ii) Proposal of draft regulations and promulgation of final regulations;

(iii) Issuance of final specifications and procedures;

(iv) Issuance of final Request for Proposals (if applicable);

(v) Licensing or certifications of stations and inspectors;

(vi) The date mandatory testing will begin for each model year to be covered by the program;

(vii) The date full-stringency cutpoints will take effect;

(viii) All other relevant dates;

(2) An analysis of emission level targets for the program using the most current EPA mobile source emission model or an alternative approved by the Administrator showing that the program meets the performance standard described in §51.351 or §51.352 of this subpart, as applicable;

(3) A description of the geographic coverage of the program, including ZIP codes if the program is not countywide;

(4) A detailed discussion of each of the required design elements, including provisions for Federal facility compliance;

(5) Legal authority requiring or allowing implementation of the I/M program and providing either broad or specific authority to perform all required elements of the program;

(6) Legal authority for I/M program operation until such time as it is no longer necessary (i.e., until a Section 175 maintenance plan without an I/M program is approved by EPA);

(7) Implementing regulations, interagency agreements, and memoranda of understanding; and

(8) Evidence of adequate funding and resources to implement all aspects of the program.

(b) *Submittal schedule.* The SIP shall be submitted to EPA according to the following schedule—

(1) States shall submit a SIP revision by November 15, 1992 which includes the schedule required in paragraph (a)(1) of this section and a formal commitment from the Governor to the adoption and implementation of an I/M program meeting all requirements of this subpart.

(2) A SIP revision, including all necessary legal authority and the items specified in (a)(1) through (a)(8) of this section, shall be submitted no later than November 15, 1993.

(3) States shall revise SIPS as EPA develops further regulations. Revisions to incorporate on-board diagnostic checks in the I/M program shall be submitted by August 6, 1998.

(c) *Redesignation requests.* Any nonattainment area that EPA determines would otherwise qualify for redesignation from nonattainment to attainment shall receive full approval of a State Implementation Plan (SIP) submittal under Sections 182(a)(2)(B) or 182(b)(4) if the submittal contains the following elements:

(1) Legal authority to implement a basic I/M program (or enhanced if the State chooses to opt up) as required by this subpart. The legislative authority for an I/M program shall allow the adoption of implementing regulations without requiring further legislation.

(2) A request to place the I/M plan (if no I/M program is currently in place or

if an I/M program has been terminated,) or the I/M upgrade (if the existing I/M program is to continue without being upgraded) into the contingency measures portion of the maintenance plan upon redesignation.

(3) A contingency measure consisting of a commitment by the Governor or the Governor's designee to adopt or consider adopting regulations to implement an I/M program to correct a violation of the ozone or CO standard or other air quality problem, in accordance with the provisions of the maintenance plan.

(4) A contingency commitment that includes an enforceable schedule for adoption and implementation of the I/M program, and appropriate milestones. The schedule shall include the date for submission of a SIP meeting all of the requirements of this subpart. Schedule milestones shall be listed in months from the date EPA notifies the State that it is in violation of the ozone or CO standard or any earlier date specified in the State plan. Unless the State, in accordance with the provisions of the maintenance plan, chooses not to implement I/M, it must submit a SIP revision containing an I/M program no more than 18 months after notification by EPA.

(d) Basic areas continuing operation of I/M programs as part of their maintenance plan without implemented upgrades shall be assumed to be 80% as effective as an implemented, upgraded version of the same I/M program design, unless a State can demonstrate using operating information that the I/M program is more effective than the 80% level.

(e) *SIP submittals to correct violations.* SIP submissions required pursuant to a violation of the ambient ozone or CO standard (as discussed in paragraph (c) of this section) shall address all of the requirements of this subpart. The SIP shall demonstrate that performance standards in either § 51.351 or § 51.352 shall be met using an evaluation date (rounded to the nearest January for carbon monoxide and July for hydrocarbons) seven years after the date EPA notifies the State that it is in violation of the ozone or CO standard or any earlier date specified in the State plan. Emission standards for vehicles subject to an IM240 test may be phased in during the program but full standards must be in effect for at least one complete test cycle before the end of the 5-year period. All other requirements shall take effect within 24 months of the date EPA notifies the State that it is in violation of the ozone or CO standard or any earlier date specified in the State plan. The phase-in allowances of § 51.373(c) of this subpart shall not apply.

[57 FR 52987, Nov. 5, 1992, as amended at 60 FR 1738, Jan. 5, 1995; 60 FR 48036, Sept. 18, 1995; 61 FR 40946, Aug. 6, 1996; 61 FR 44119, Aug. 27, 1996]

§ 51.373 Implementation deadlines.

I/M programs shall be implemented as expeditiously as practicable.

(a) Decentralized basic programs shall be fully implemented by January 1, 1994, and centralized basic programs shall be fully implemented by July 1, 1994. More implementation time may be approved by the Administrator if an enhanced I/M program is implemented.

(b) For areas newly required to implement basic I/M after promulgation of this subpart (as a result of failure to attain, reclassification, or redesignation) decentralized programs shall be fully implemented within one year of obtaining legal authority. Centralized programs shall be fully implemented within two years of obtaining legal authority. More implementation time may be approved by the Administrator if an enhanced I/M program is implemented.

(c) All requirements related to enhanced I/M programs shall be implemented by January 1, 1995, with the following exceptions.

(1) Areas switching from an existing test-and-repair network to a test-only network may phase in the change between January of 1995 and January of 1996. Starting in January of 1995 at least 30% of the subject vehicles shall participate in the test-only system (in States with multiple I/M areas, implementation is not required in every area by January 1995 as long as statewide, 30% of the subject vehicles are involved in testing) and shall be subject to the new test procedures (including the evaporative system checks, visual inspections, and tailpipe emission tests).

By January 1, 1996, all applicable vehicle model years and types shall be included in the test-only system. During the phase-in period, all requirements of this subpart shall be applied to the test-only portion of the program; existing requirements may continue to apply for the test-and-repair portion of the program until it is phased out by January 1, 1996.

(2) Areas starting new test-only programs and those with existing test-only programs may also phase in the new test procedures between January 1, 1995 and January 1, 1996. Other program requirements shall be fully implemented by January 1, 1995.

(d) In the case of areas newly required to implement enhanced I/M after promulgation of this subpart (as a result of failure to attain, reclassification, or nonattainment designation) enhanced I/M shall be implemented within 24 months of obtaining legal authority.

(e) Legal authority for the implementing agency or agencies to implement and enforce an I/M program consistent with this subpart shall be obtained from the State legislature or local governing body in the first legislative session after November 5, 1992, or after being newly required to implement or upgrade an I/M program as in paragraph (b) or (c) of this section, including sessions already in progress if at least 21 days remain before the final bill submittal deadline.

(f) Areas that choose to implement an enhanced I/M program only meeting the requirements of §51.351(h) shall fully implement the program no later than July 1, 1999. The availability and use of this late start date does not relieve the area of the obligation to meet the requirements of §51.351(h)(11) by the end of 1999.

(g) On-Board Diagnostic checks shall be implemented in all basic, low enhanced and high enhanced areas as part of the I/M program by January 1, 2001.

[57 FR 52987, Nov. 5, 1992, as amended at 58 FR 59367, Nov. 9, 1993; 61 FR 39037, July 25, 1996; 61 FR 40946, Aug. 6, 1996; 63 FR 24433, May 4, 1998]

APPENDIX A TO SUBPART S—CALIBRATIONS, ADJUSTMENTS AND QUALITY CONTROL

(I) Steady-State Test Equipment

States may opt to use transient emission test equipment for steady-state tests and follow the quality control requirements in paragraph (II) of this appendix instead of the following requirements.

(a) Equipment shall be calibrated in accordance with the manufacturers' instructions.

(b) *Prior to each test.* (1) *Hydrocarbon hang-up check.* Immediately prior to each test the analyzer shall automatically perform a hydrocarbon hang-up check. If the HC reading, when the probe is sampling ambient air, exceeds 20 ppm, the system shall be purged with clean air or zero gas. The analyzer shall be inhibited from continuing the test until HC levels drop below 20 ppm.

(2) *Automatic zero and span.* The analyzer shall conduct an automatic zero and span check prior to each test. The span check shall include the HC, CO, and CO2 channels, and the NO and O_2 channels, if present. If zero and/or span drift cause the signal levels to move beyond the adjustment range of the analyzer, it shall lock out from testing.

(3) *Low flow.* The system shall lock out from testing if sample flow is below the acceptable level as defined in paragraph (I)(b)(6) of appendix D to this subpart.

(c) *Leak check.* A system leak check shall be performed within twenty-four hours before the test in low volume stations (those performing less than the 4,000 inspections per year) and within four hours in high-volume stations (4,000 or more inspections per year) and may be performed in conjunction with the gas calibration described in paragraph (I)(d)(1) of this appendix. If a leak check is not performed within the preceding twenty-four hours in low volume stations and within four hours in high-volume stations or if the analyzer fails the leak check, the analyzer shall lock out from testing. The leak check shall be a procedure demonstrated to effectively check the sample hose and probe for leaks and shall be performed in accordance with good engineering practices. An error of more than ±2% of the reading using low range span gas shall cause the analyzer to lock out from testing and shall require repair of leaks.

(d) *Gas calibration.* (1) On each operating day in high-volume stations, analyzers shall automatically require and successfully pass a two-point gas calibration for HC, CO, and CO2 and shall continually compensate for changes in barometric pressure. Calibration shall be checked within four hours before the test and the analyzer adjusted if the reading is more than 2% different from the span gas

value. In low-volume stations, analyzers shall undergo a two-point calibration within seventy-two hours before each test, unless changes in barometric pressure are compensated for automatically and statistical process control demonstrates equal or better quality control using different frequencies. Gas calibration shall be accomplished by introducing span gas that meets the requirements of paragraph (I)(d)(3) of this appendix into the analyzer through the calibration port. If the analyzer reads the span gas within the allowable tolerance range (i.e., the square root of sum of the squares of the span gas tolerance described in paragraph (I)(d)(3) of this appendix and the calibration tolerance, which shall be equal to 2%), no adjustment of the analyzer is necessary. The gas calibration procedure shall correct readings that exceed the allowable tolerance range to the center of the allowable tolerance range. The pressure in the sample cell shall be the same with the calibration gas flowing during calibration as with the sample gas flowing during sampling. If the system is not calibrated, or the system fails the calibration check, the analyzer shall lock out from testing.

(2) *Span points.* A two point gas calibration procedure shall be followed. The span shall be accomplished at one of the following pairs of span points:

(A) 300—ppm propane (HC)
1.0—% carbon monoxide (CO)
6.0—% carbon dioxide (CO2)
1000—ppm nitric oxide (if equipped with NO)
1200—ppm propane (HC)
4.0—% carbon monoxide (CO)
12.0—% carbon dioxide (CO2)
3000—ppm nitric oxide (if equipped with NO)
(B) —ppm propane
0.0—% carbon monoxide
0.0—% carbon dioxide
0—ppm nitric oxide (if equipped with NO)
600—ppm propane (HC)
1.6—% carbon monoxide (CO)
11.0—% carbon dioxide (CO2)
1200—ppm nitric oxide (if equipped with NO)

(3) *Span gases.* The span gases used for the gas calibration shall be traceable to National Institute of Standards and Technology (NIST) standards ±2%, and shall be within two percent of the span points specified in paragraph (d)(2) of this appendix. Zero gases shall conform to the specifications given in §86.114–79(a)(5) of this chapter.

(e) *Dynamometer checks*—(1) *Monthly check.* Within one month preceding each loaded test, the accuracy of the roll speed indicator shall be verified and the dynamometer shall be checked for proper power absorber settings.

(2) *Semi-annual check.* Within six months preceding each loaded test, the road-load response of the variable-curve dynamometer or the frictional power absorption of the dynamometer shall be checked by a coast down procedure similar to that described in §86.118–78 of this chapter. The check shall be done at 30 mph, and a power absorption load setting to generate a total horsepower (hp) of 4.1 hp. The actual coast down time from 45 mph to 15 mph shall be within ±1 second of the time calculated by the following equation:

$$\text{Coast Down Time} = \frac{0.0508 \times W}{HP}$$

where W is the total inertia weight as represented by the weight of the rollers (excluding free rollers), and any inertia flywheels used, measured in pounds. If the coast down time is not within the specified tolerance the dynamometer shall be taken out of service and corrective action shall be taken.

(f) *Other checks.* In addition to the above periodic checks, these shall also be used to verify system performance under the following special circumstances.

(1) *Gas Calibration.* (A) Each time the analyzer electronic or optical systems are repaired or replaced, a gas calibration shall be performed prior to returning the unit to service.

(B) In high-volume stations, monthly multi-point calibrations shall be performed. Low-volume stations shall perform multi-point calibrations every six months. The calibration curve shall be checked at 20%, 40%, 60%, and 80% of full scale and adjusted or repaired if the specifications in appendix D(I)(b)(1) to this subpart are not met.

(2) *Leak checks.* Each time the sample line integrity is broken, a leak check shall be performed prior to testing.

(II) Transient Test Equipment

(a) *Dynamometer.* Once per week, the calibration of each dynamometer and each fly wheel shall be checked by a dynamometer coast-down procedure comparable to that in §86.118–78 of this chapter between the speeds of 55 to 45 mph, and between 30 to 20 mph. All rotating dynamometer components shall be included in the coast-down check for the inertia weight selected. For dynamometers with uncoupled rolls, the uncoupled rollers may undergo a separate coast-down check. If a vehicle is used to motor the dynamometer to the beginning coast-down speed, the vehicle shall be lifted off the dynamometer rolls before the coast-down test begins. If the difference between the measured coast-down time and the theoretical coast-down time is greater than +1 second, the system shall lock out, until corrective action brings the dynamometer into calibration.

(b) *Constant volume sampler.* (1) The constant volume sampler (CVS) flow calibration shall be checked daily by a procedure that identifies deviations in flow from the true value. Deviations greater than ±4% shall be corrected.

(2) The sample probe shall be cleaned and checked at least once per month. The main CVS venturi shall be cleaned and checked at least once per year.

(3) Verification that flow through the sample probe is adequate for the design shall be done daily. Deviations greater than the design tolerances shall be corrected.

(c) *Analyzer system* —(1) *Calibration checks.* (A) Upon initial operation, calibration curves shall be generated for each analyzer. The calibration curve shall consider the entire range of the analyzer as one curve. At least 6 calibration points plus zero shall be used in the lower portion of the range corresponding to an average concentration of approximately 2 gpm for HC, 30 gpm for CO, 3 gpm for NO_X, and 400 gpm for CO_2. For the case where a low and a high range analyzer is used, the high range analyzer shall use at least 6 calibration points plus zero in the lower portion of the high range scale corresponding to approximately 100% of the full-scale value of the low range analyzer. For all analyzers, at least 6 calibration points shall also be used to define the calibration curve in the region above the 6 lower calibration points. Gas dividers may be used to obtain the intermediate points for the general range classifications specified. The calibration curves generated shall be a polynomial of no greater order than 4th order, and shall fit the date within 0.5% at each calibration point.

(B) For all calibration curves, curve checks, span adjustments, and span checks, the zero gas shall be considered a down-scale reference gas, and the analyzer zero shall be set at the trace concentration value of the specific zero gas used.

(2) The basic curve shall be checked monthly by the same procedure used to generate the curve, and to the same tolerances.

(3) On a daily basis prior to vehicle testing—

(A) The curve for each analyzer shall be checked by adjusting the analyzer to correctly read a zero gas and an up-scale span gas, and then by correctly reading a mid-scale span gas within 2% of point. If the analyzer does not read the mid-scale span point within 2% of point, the system shall lock out. The up-scale span gas concentration for each analyzer shall correspond to approximately 80 percent of full scale, and the mid-point concentration shall correspond to approximately 15 percent of full scale; and

(B) After the up-scale span check, each analyzer in a given facility shall analyze a sample of a random concentration corresponding to approximately 0.5 to 3 times the cut point (in gpm) for the constituent. The value of the random sample may be determined by a gas blender. The deviation in analysis from the sample concentration for each analyzer shall be recorded and compared to the historical mean and standard deviation for the analyzers at the facility and at all facilities. Any reading exceeding 3 sigma shall cause the analyzer to lock out.

(4) *Flame ionization detector check.* Upon initial operation, and after maintenance to the detector, each Flame Ionization Detector (FID) shall be checked, and adjusted if necessary, for proper peaking and characterization. Procedures described in SAE Paper No. 770141 are recommended for this purpose. A copy of this paper may be obtained from the Society of Automotive Engineers, Inc. (SAE), 400 Commonwealth Drive, Warrendale, Pennsylvania, 15096–0001. Additionally, every month the response of each FID to a methane concentration of approximately 50 ppm CH_4 shall be checked. If the response is outside of the range of 1.10 to 1.20, corrective action shall be taken to bring the FID response within this range. The response shall be computed by the following formula:

$$\text{Ratio of Methane Response} = \frac{\text{FID response in ppmC}}{\text{ppm methane in cylinder}}$$

(5) *Spanning frequency.* The zero and up-scale span point shall be checked, and adjusted if necessary, at 2 hour intervals following the daily mid-scale curve check. If the zero or the up-scale span point drifts by more than 2% for the previous check (except for the first check of the day), the system shall lock out, and corrective action shall be taken to bring the system into compliance.

(6) *Spanning limit checks.* The tolerance on the adjustment of the up-scale span point is 0.4% of point. A software algorithm to perform the span adjustment and subsequent calibration curve adjustment shall be used. However, software up-scale span adjustments greater than ±10% shall cause the system to lock out, requiring system maintenance.

(7) *Integrator checks.* Upon initial operation, and every three months thereafter, emissions from a randomly selected vehicle with official test value greater than 60% of the standard (determined retrospectively) shall be simultaneously sampled by the normal integration method and by the bag method in each lane. The data from each method shall be put into a historical data base for determining normal and deviant performance for each test lane, facility, and all facilities combined. Specific deviations exceeding ±5% shall require corrective action.

(8) *Interference.* CO and CO_2 analyzers shall be checked prior to initial service, and on a yearly basis thereafter, for water interference. The specifications and procedures used shall generally comply with either §86.122–78 or §86.321–79 of this chapter.

(9) *NO_X* converter check. The converter efficiency of the NO_2 to NO converter shall be checked on a weekly basis. The check shall generally conform to §86.123–78 of this chapter, or EPA MVEL Form 305–01. Equivalent methods may be approved by the Administrator.

(10) *NO/NO_X* flow balance. The flow balance between the NO and NO_X test modes shall be checked weekly. The check may be combined with the NO_X convertor check as illustrated in EPA MVEL Form 305–01.

(11) *Additional checks.* Additional checks shall be performed on the HC, CO, CO_2, and NO_X analyzers according to best engineering practices for the measurement technology used to ensure that measurements meet specified accuracy requirements.

(12) *System artifacts (hang-up).* Prior to each test a comparison shall be made between the background HC reading, the HC reading measured through the sample probe (if different), and the zero gas. Deviations from the zero gas greater than 10 parts per million carbon (ppmC) shall cause the analyzer to lock out.

(13) *Ambient background.* The average of the pre-test and post-test ambient background levels shall be compared to the permissible levels of 10 ppmC HC, 20 ppm CO, and 1 ppm NO_X. If the permissible levels are exceeded, the test shall be voided and corrective action taken to lower the ambient background concentrations.

(14) *Analytical gases.* Zero gases shall meet the requirements of §86.114–79(a)(5) of this chapter. NO_X calibration gas shall be a single blend using nitrogen as the diluent. Calibration gas for the flame ionization detector shall be a single blend of propane with a diluent of air. Calibration gases for CO and CO_2 shall be single blends using nitrogen or air as a diluent. Multiple blends of HC, CO, and CO_2 in air may be used if shown to be stable and accurate.

(III) Purge Analysis System

On a daily basis each purge flow meter shall be checked with a simulated purge flow against a reference flow measuring device with performance specifications equal to or better than those specified for the purge meter. The check shall include a mid-scale rate check, and a total flow check between 10 and 20 liters. Deviations greater than ±5% shall be corrected. On a monthly basis, the calibration of purge meters shall be checked for proper rate and total flow with three equally spaced points across the flow rate and the totalized flow range. Deviations exceeding the specified accuracy shall be corrected. The dynamometer quality assurance checks required under paragraph (II) of this appendix shall also apply to the dynamometer used for purge tests.

(IV) Evaporative System Integrity Test Equipment

(a) On a weekly basis pressure measurement devices shall be checked against a reference device with performance specifications equal to or better than those specified for the measurement device. Deviations exceeding the performance specifications shall be corrected. Flow measurement devices, if any, shall be checked according to paragraph III of this appendix.

(b) Systems that monitor evaporative system leaks shall be checked for integrity on a daily basis by sealing and pressurizing.

[57 FR 52987, Nov. 5, 1992, as amended at 58 FR 59367, Nov. 9, 1993]

APPENDIX B TO SUBPART S—TEST PROCEDURES

(I) Idle test

(a) *General requirements*—(1) *Exhaust gas sampling algorithm.* The analysis of exhaust gas concentrations shall begin 10 seconds after the applicable test mode begins. Exhaust gas concentrations shall be analyzed at a minimum rate of two times per second. The measured value for pass/fail determinations shall be a simple running average of the measurements taken over five seconds.

(2) *Pass/fail determination.* A pass or fail determination shall be made for each applicable test mode based on a comparison of the short test standards contained in appendix C to this subpart, and the measured value for HC and CO as described in paragraph (I)(a)(1) of this appendix. A vehicle shall pass the test mode if any pair of simultaneous measured values for HC and CO are below or equal to the applicable short test standards. A vehicle shall fail the test mode if the values for either HC or CO, or both, in all simultaneous pairs of values are above the applicable standards.

(3) *Void test conditions.* The test shall immediately end and any exhaust gas measurements shall be voided if the measured concentration of CO plus CO_2 falls below six percent or the vehicle's engine stalls at any time during the test sequence.

(4) *Multiple exhaust pipes.* Exhaust gas concentrations from vehicle engines equipped with multiple exhaust pipes shall be sampled simultaneously.

(5) This test shall be immediately terminated upon reaching the overall maximum test time.

(b) *Test sequence.* (1) The test sequence shall consist of a first-chance test and a second-chance test as follows:

(i) The first-chance test, as described under paragraph (c) of this section, shall consist of an idle mode.

(ii) The second-chance test as described under paragraph (I)(d) of this appendix shall be performed only if the vehicle fails the first-chance test.

(2) The test sequence shall begin only after the following requirements are met:

(i) The vehicle shall be tested in as-received condition with the transmission in neutral or park and all accessories turned off. The engine shall be at normal operating temperature (as indicated by a temperature gauge, temperature lamp, touch test on the radiator hose, or other visual observation for overheating).

(ii) For all pre-1996 model year vehicles, a tachometer shall be attached to the vehicle in accordance with the analyzer manufacturer's instructions. For 1996 and newer model year vehicles the OBD data link connector will be used to monitor RPM. In the event that an OBD data link connector is not available or that an RPM signal is not available over the data link connector, a tachometer shall be used instead.

(iii) The sample probe shall be inserted into the vehicle's tailpipe to a minimum depth of 10 inches. If the vehicle's exhaust system prevents insertion to this depth, a tailpipe extension shall be used.

(iv) The measured concentration of CO plus CO_2 shall be greater than or equal to six percent.

(c) *First-chance test.* The test timer shall start (tt=0) when the conditions specified in paragraph (I)(b)(2) of this appendix are met. The first-chance test shall have an overall maximum test time of 145 seconds (tt=145). The first-chance test shall consist of an idle mode only.

(1) The mode timer shall start (mt=0) when the vehicle engine speed is between 350 and 1100 rpm. If engine speed exceeds 1100 rpm or falls below 350 rpm, the mode timer shall reset zero and resume timing. The minimum mode length shall be determined as described under paragraph (I)(c)(2) of this appendix. The maximum mode length shall be 90 seconds elapsed time (mt=90).

(2) The pass/fail analysis shall begin after an elapsed time of 10 seconds (mt=10). A pass or fail determination shall be made for the vehicle and the mode shall be terminated as follows:

(i) The vehicle shall pass the idle mode and the test shall be immediately terminated if, prior to an elapsed time of 30 seconds (mt=30), measured values are less than or equal to 100 ppm HC and 0.5 percent CO.

(ii) The vehicle shall pass the idle mode and the test shall be terminated at the end of an elapsed time of 30 seconds (mt=30), if prior to that time the criteria of paragraph (I)(c)(2)(i) of this appendix are not satisfied and the measured values are less than or equal to the applicable short test standards as described in paragraph (I)(a)(2) of this appendix.

(iii) The vehicle shall pass the idle mode and the test shall be immediately terminated if, at any point between an elapsed time of 30 seconds (mt=30) and 90 seconds (mt=90), the measured values are less than or equal to the applicable short test standards as described in paragraph (I)(a)(2) of this appendix.

(iv) The vehicle shall fail the idle mode and the test shall be terminated if none of the provisions of paragraphs (I)(c)(2)(i), (ii) and (iii) of this appendix is satisfied by an elapsed time of 90 seconds (mt=90). Alternatively, the vehicle may be failed if the provisions of paragraphs (I)(c)(2)(i) and (ii) of this appendix are not met within an elapsed time of 30 seconds.

(v) *Optional.* The vehicle may fail the first-chance test and the second-chance test shall be omitted if no exhaust gas concentration lower than 1800 ppm HC is found by an elapsed time of 30 seconds (mt=30).

(d) *Second-chance test.* If the vehicle fails the first-chance test, the test timer shall reset to zero (tt=0) and a second-chance test shall be performed. The second-chance test shall have an overall maximum test time of 425 seconds (tt=425). The test shall consist of a preconditioning mode followed immediately by an idle mode.

(1) *Preconditioning mode.* The mode timer shall start (mt=0) when the engine speed is between 2200 and 2800 rpm. The mode shall continue for an elapsed time of 180 seconds (mt=180). If engine speed falls below 2200 rpm or exceeds 2800 rmp for more than five seconds in any one excursion, or 15 seconds over all excursions, the mode timer shall reset to zero and resume timing.

(2) *Idle mode*—(i) *Ford Motor Company and Honda vehicles.* The engines of 1981–1987 Ford Motor Company vehicles and 1984–1985 Honda Preludes shall be shut off for not more than 10 seconds and restarted. This procedure may also be used for 1988–1989 Ford Motor Company vehicles but should not be used for other vehicles. The probe may be removed from the tailpipe or the sample pump turned

off if necessary to reduce analyzer fouling during the restart procedure.

(ii) The mode timer shall start (mt=0) when the vehicle engine speed is between 350 and 1100 rpm. If engine speed exceeds 1100 rpm or falls below 350 rpm, the mode timer shall reset to zero and resume timing. The minimum idle mode length shall be determined as described in paragraph (I)(d)(2)(iii) of this appendix. The maximum idle mode length shall be 90 seconds elapsed time (mt=90).

(iii) The pass/fail analysis shall begin after an elapsed time of 10 seconds (mt=10). A pass or fail determination shall be made for the vehicle and the idle mode shall be terminated as follows:

(A) The vehicle shall pass the idle mode and the test shall be immediately terminated if, prior to an elapsed time of 30 seconds (mt=30), measured values are less than or equal to 100 ppm HC and 0.5 percent CO.

(B) The vehicle shall pass the idle mode and the test shall be terminated at the end of an elapsed time of 30 seconds (mt=30), if prior to that time the criteria of paragraph (I)(d)(2)(iii)(A) of this appendix are not satisfied and the measured values are less than or equal to the applicable short test standards as described in paragraph (I)(a)(2) of this appendix.

(C) The vehicle shall pass the idle mode and the test shall be immediately terminated if, at any point between an elapsed time of 30 seconds (mt=30) and 90 seconds (mt=90), measured values are less than or equal to the applicable short test standards described in paragraph (I)(a)(2) of this appendix.

(D) The vehicle shall fail the idle mode and the test shall be terminated if none of the provisions of paragraphs (I)(d)(2)(iii)(A), (d)(2)(iii)(B), and (d)(2)(iii)(C) of this appendix are satisfied by an elapsed time of 90 seconds (mt=90).

(II) Two Speed Idle Test

(a) *General requirements*—(1) *Exhaust gas sampling algorithm.* The analysis of exhaust gas concentrations shall begin 10 seconds after the applicable test mode begins. Exhaust gas concentrations shall be analyzed at a rate of two times per second. The measured value for pass/fail determinations shall be a simple running average of the measurements taken over five seconds.

(2) *Pass/fail determination.* A pass or fail determination shall be made for each applicable test mode based on a comparison of the short test standards contained in appendix C to this subpart, and the measured value for HC and CO as described in paragraph (II)(a)(1) of this appendix. A vehicle shall pass the test mode if any pair of simultaneous values for HC and CO are below or equal to the applicable short test standards. A vehicle shall fail the test mode if the values for either HC or CO, or both, in all simultaneous pairs of values are above the applicable standards.

(3) *Void test conditions.* The test shall immediately end and any exhaust gas measurements shall be voided if the measured concentration of CO plus CO_2 falls below six percent or the vehicle's engine stalls at any time during the test sequence.

(4) *Multiple exhaust pipes.* Exhaust gas concentrations from vehicle engines equipped with multiple exhaust pipes shall be sampled simultaneously.

(5) The test shall be immediately terminated upon reaching the overall maximum test time.

(b) *Test sequence.* (1) The test sequence shall consist of a first-chance test and a second-chance test as follows:

(i) The first-chance test, as described under paragraph (II)(c) of this appendix, shall consist of an idle mode followed by a high-speed mode.

(ii) The second-chance high-speed mode, as described under paragraph (II)(c) of this appendix, shall immediately follow the first-chance high-speed mode. It shall be performed only if the vehicle fails the first-chance test. The second-chance idle mode, as described under paragraph (II)(d) of this appendix, shall follow the second-chance high-speed mode and be performed only if the vehicle fails the idle mode of the first-chance test.

(2) The test sequence shall begin only after the following requirements are met:

(i) The vehicle shall be tested in as-received condition with the transmission in neutral or park and all accessories turned off. The engine shall be at normal operating temperature (as indicated by a temperature gauge, temperature lamp, touch test on the radiator hose, or other visual observation for overheating).

(ii) For all pre-1996 model year vehicles, a tachometer shall be attached to the vehicle in accordance with the analyzer manufacturer's instructions. For 1996 and newer model year vehicles the OBD data link connector will be used to monitor RPM. In the event that an OBD data link connector is not available or that an RPM signal is not available over the data link connector, a tachometer shall be used instead.

(iii) The sample probe shall be inserted into the vehicle's tailpipe to a minimum depth of 10 inches. If the vehicle's exhaust system prevents insertion to this depth, a tailpipe extension shall be used.

(iv) The measured concentration of CO plus CO_2 shall be greater than or equal to six percent.

(c) *First-chance test and second-chance high-speed mode.* The test timer shall start (tt=0) when the conditions specified in paragraph (b)(2) of this section are met. The first-chance test and second-chance high-speed

mode shall have an overall maximum test time of 425 seconds (tt=425). The first-chance test shall consist of an idle mode followed immediately by a high-speed mode. This is followed immediately by an additional second-chance high-speed mode, if necessary.

(1) *First-chance idle mode.* (i) The mode timer shall start (mt=0) when the vehicle engine speed is between 350 and 1100 rpm. If engine speed exceeds 1100 rpm or falls below 350 rpm, the mode timer shall reset to zero and resume timing. The minimum idle mode length shall be determined as described in paragraph (II)(c)(1)(ii) of this appendix. The maximum idle mode length shall be 90 seconds elapsed time (mt=90).

(ii) The pass/fail analysis shall begin after an elapsed time of 10 seconds (mt=10). A pass or fail determination shall be made for the vehicle and the mode terminated as follows:

(A) The vehicle shall pass the idle mode and the mode shall be immediately terminated if, prior to an elapsed time of 30 seconds (mt=30), measured values are less than or equal to 100 ppm HC and 0.5 percent CO.

(B) The vehicle shall pass the idle mode and the mode shall be terminated at the end of an elapsed time of 30 seconds (mt=30) if, prior to that time, the criteria of paragraph (II)(c)(1)(ii)(A) of this appendix are not satisfied, and the measured values are less than or equal to the applicable short test standards as described in paragraph (II)(a)(2) of this appendix.

(C) The vehicle shall pass the idle mode and the mode shall be immediately terminated if, at any point between an elapsed time of 30 seconds (mt=30) and 90 seconds (mt=90), the measured values are less than or equal to the applicable short test standards as described in paragraph (II)(a)(2) of this appendix.

(D) The vehicle shall fail the idle mode and the mode shall be terminated if none of the provisions of paragraphs (II)(c)(1)(ii)(A), (B), and (C) of this appendix is satisfied by an elapsed time of 90 seconds (mt=90). Alternatively, the vehicle may be failed if the provisions of paragraphs (II)(c)(2)(i) and (ii) of this appendix are not met within an elapsed time of 30 seconds.

(E) *Optional.* The vehicle may fail the first-chance test and the second-chance test shall be omitted if no exhaust gas concentration less than 1800 ppm HC is found by an elapsed time of 30 seconds (mt=30).

(2) *First-chance and second-chance high-speed modes.* This mode includes both the first-chance and second-chance high-speed modes, and follows immediately upon termination of the first-chance idle mode.

(i) The mode timer shall reset (mt=0) when the vehicle engine speed is between 2200 and 2800 rpm. If engine speed falls below 2200 rpm or exceeds 2800 rpm for more than two seconds in one excursion, or more than six seconds over all excursions within 30 seconds of the final measured value used in the pass/fail determination, the measured value shall be invalidated and the mode continued. If any excursion lasts for more than ten seconds, the mode timer shall reset to zero (mt=0) and timing resumed. The minimum high-speed mode length shall be determined as described under paragraphs (II)(c)(2)(ii) and (iii) of this appendix. The maximum high-speed mode length shall be 180 seconds elapsed time (mt=180).

(ii) *Ford Motor Company and Honda vehicles.* For 1981–1987 model year Ford Motor Company vehicles and 1984–1985 model year Honda Preludes, the pass/fail analysis shall begin after an elapsed time of 10 seconds (mt=10) using the following procedure. This procedure may also be used for 1988–1989 Ford Motor Company vehicles but should not be used for other vehicles.

(A) A pass or fail determination, as described below, shall be used, for vehicles that passed the idle mode, to determine whether the high-speed test should be terminated prior to or at the end of an elapsed time of 180 seconds (mt=180).

(*1*) The vehicle shall pass the high-speed mode and the test shall be immediately terminated if, prior to an elapsed time of 30 seconds (mt=30), the measured values are less than or equal to 100 ppm HC and 0.5 percent CO.

(*2*) The vehicle shall pass the high-speed mode and the test shall be terminated at the end of an elapsed time of 30 seconds (mt=30) if, prior to that time, the criteria of paragraph (II)(c)(2)(ii)(A)(*1*) of this appendix are not satisfied, and the measured values are less than or equal to the applicable short test standards as described in paragraph (II)(a)(2) of this appendix.

(*3*) The vehicle shall pass the high-speed mode and the test shall be immediately terminated if, at any point between an elapsed time of 30 seconds (mt=30) and 180 seconds (mt=180), the measured values are less than or equal to the applicable short test standards as described in paragraph (II)(a)(2) of this appendix.

(*4*) *Restart.* If at an elapsed time of 90 seconds (mt=90) the measured values are greater than the applicable short test standards as described in paragraph (II)(a)(2) of this appendix, the vehicle's engine shall be shut off for not more than 10 seconds after returning to idle and then shall be restarted. The probe may be removed from the tailpipe or the sample pump turned off if necessary to reduce analyzer fouling during the restart procedure. The mode timer will stop upon engine shut off (mt=90) and resume upon engine restart. The pass/fail determination shall resume as follows after 100 seconds have elapsed (mt=100).

(*i*) The vehicle shall pass the high-speed mode and the test shall be immediately terminated if, at any point between an elapsed

time of 100 seconds (mt=100) and 180 seconds (mt=180), the measured values are less than or equal to the applicable short test standards described in paragraph (II)(a)(2) of this appendix.

(*ii*) The vehicle shall fail the high-speed mode and the test shall be terminated if paragraph (II)(c)(2)(ii)(A)(*4*)(*i*) of this appendix is not satisfied by an elapsed time of 180 seconds (mt=180).

(B) A pass or fail determination shall be made for vehicles that *failed* the idle mode and the high-speed mode terminated at the *end* of an elapsed time of 180 seconds (mt=180) as follows:

(*1*) The vehicle shall pass the high-speed mode and the mode shall be terminated at an elapsed time of 180 seconds (mt=180) if any measured values of HC and CO exhaust gas concentrations during the high-speed mode are less than or equal to the applicable short test standards as described in paragraph (II)(a)(2) of this appendix.

(*2*) *Restart.* If at an elapsed time of 90 seconds (mt=90) the measured values of HC and CO exhaust gas concentrations during the high-speed mode are greater than the applicable short test standards as described in paragraph (II)(a)(2) of this appendix, the vehicle's engine shall be shut off for not more than 10 seconds after returning to idle and then shall be restarted. The probe may be removed from the tailpipe or the sample pump turned off if necessary to reduce analyzer fouling during the restart procedure. The mode timer will stop upon engine shut off (mt=90) and resume upon engine restart. The pass/fail determination shall resume as follows after 100 seconds have elapsed (mt=100).

(*i*) The vehicle shall pass the high-speed mode and the mode shall be terminated at an elapsed time of 180 seconds (mt=180) if any measured values of HC and CO exhaust gas concentrations during the high-speed mode are less than or equal to the applicable short test standards as described in paragraph (II)(a)(2) of this appendix.

(*ii*) The vehicle shall fail the high-speed mode and the test shall be terminated if paragraph (II)(c)(2)(ii)(B)(*2*)(*i*) of this appendix is not satisfied by an elapsed time of 180 seconds (mt=180).

(*iii*) *All other light-duty motor vehicles.* The pass/fail analysis for vehicles not specified in paragraph (II)(c)(2)(ii) of this appendix shall begin after an elapsed time of 10 seconds (mt=10) using the following procedure.

(A) A pass or fail determination, as described below, shall be used for vehicles that passed the idle mode, to determine whether the high-speed mode should be terminated prior to or at the end of an elapsed time of 180 seconds (mt=180).

(*1*) The vehicle shall pass the high-speed mode and the test shall be immediately terminated if, prior to an elapsed time of 30 seconds (mt=30), any measured values are less than or equal to 100 ppm HC and 0.5 percent CO.

(*2*) The vehicle shall pass the high-speed mode and the test shall be terminated at the end of an elapsed time of 30 seconds (mt=30) if, prior to that time, the criteria of paragraph (II)(c)(2)(iii)(A)(*1*) of this appendix are not satisfied, and the measured values are less than or equal to the applicable short test standards as described in paragraph (II)(a)(2) of this appendix.

(*3*) The vehicle shall pass the high-speed mode and the test shall be immediately terminated if, at any point between an elapsed time of 30 seconds (mt=30) and 180 seconds (mt=180), the measured values are less than or equal to the applicable short test standards as described in paragraph (II)(a)(2) of this appendix.

(*4*) The vehicle shall fail the high-speed mode and the test shall be terminated if none of the provisions of paragraphs (II)(c)(2)(iii)(A)(*1*), (*2*), and (*3*) of this appendix is satisfied by an elapsed time of 180 seconds (mt=180).

(B) A pass or fail determination shall be made for vehicles that *failed* the idle mode and the high-speed mode terminated at the *end* of an elapsed time of 180 seconds (mt=180) as follows:

(*1*) The vehicle shall pass the high-speed mode and the mode shall be terminated at an elapsed time of 180 seconds (mt=180) if any measured values are less than or equal to the applicable short test standards as described in paragraph (II)(a)(2) of this appendix.

(*2*) The vehicle shall fail the high-speed mode and the test shall be terminated if paragraph (II)(c)(2)(iii)(B)(*1*) of this appendix is not satisfied by an elapsed time of 180 seconds (mt=180).

(d) *Second-chance idle mode.* If the vehicle fails the first-chance idle mode and passes the high-speed mode, the test timer shall reset to zero (tt=0) and a second-chance idle mode shall commence. The second-chance idle mode shall have an overall maximum test time of 145 seconds (tt=145). The test shall consist of an idle mode only.

(1) The engines of 1981–1987 Ford Motor Company vehicles and 1984–1985 Honda Preludes shall be shut off for not more than 10 seconds and restarted. The probe may be removed from the tailpipe or the sample pump turned off if necessary to reduce analyzer fouling during the restart procedure. This procedure may also be used for 1988–1989 Ford Motor Company vehicles but should not be used for other vehicles.

(2) The mode timer shall start (mt=0) when the vehicle engine speed is between 350 and 1100 rpm. If the engine speed exceeds 1100 rpm or falls below 350 rpm the mode timer shall reset to zero and resume timing. The minimum second-chance idle mode length

shall be determined as described in paragraph (II)(d)(3) of this appendix. The maximum second-chance idle mode length shall be 90 seconds elapsed time (mt=90).

(3) The pass/fail analysis shall begin after an elapsed time of 10 seconds (mt=10). A pass or fail determination shall be made for the vehicle and the second-chance idle mode shall be terminated as follows:

(i) The vehicle shall pass the second-chance idle mode and the test shall be immediately terminated if, prior to an elapsed time of 30 seconds (mt=30), any measured values are less than or equal to 100 ppm HC and 0.5 percent CO.

(ii) The vehicle shall pass the second-chance idle mode and the test shall be terminated at the end of an elapsed time of 30 seconds (mt=30) if, prior to that time, the criteria of paragraph (II)(d)(3)(i) of this appendix are not satisfied, and the measured values are less than or equal to the applicable short test standards as described in paragraph (II)(a)(2) of this appendix.

(iii) The vehicle shall pass the second-chance idle mode and the test shall be immediately terminated if, at any point between an elapsed time of 30 seconds (mt=30) and 90 seconds (mt=90), the measured values are less than or equal to the applicable short test standards as described in paragraph (II)(a)(2) of this appendix.

(iv) The vehicle shall fail the second-chance idle mode and the test shall be terminated if none of the provisions of paragraph (II)(d)(3)(i), (ii), and (iii) of this appendix is satisfied by an elapsed time of 90 seconds (mt=90).

(III) Loaded Test

(a) *General requirements*—(1) *Exhaust gas sampling algorithm.* The analysis of exhaust gas concentrations shall begin 10 seconds after the applicable test mode begins. Exhaust gas concentrations shall be analyzed at a minimum rate of two times per second. The measured value for pass/fail determinations shall be a simple running average of the measurements taken over five seconds.

(2) *Pass/fail determination.* A pass or fail determination shall be made for each applicable test mode based on a comparison of the short test standards contained in appendix C to this subpart and the measured value for HC and CO as described in paragraph (III)(a)(1) of this appendix. A vehicle shall pass the test mode if any pair of simultaneous values for HC and CO are below or equal to the applicable short test standards. A vehicle shall fail the test mode if the values for either HC or CO, or both, in all simultaneous pairs of values are above the applicable standards.

(3) *Void test conditions.* The test shall immediately end and any exhaust gas measurements shall be voided if the measured concentration of CO plus CO_2 falls below six percent or the vehicle's engine stalls at any time during the test sequence.

(4) *Multiple exhaust pipes.* Exhaust gas concentrations from vehicle engines equipped with multiple exhaust pipes shall be sampled simultaneously.

(5) The test shall be immediately terminated upon reaching the overall maximum test time.

(b) *Test sequence.* (1) The test sequence shall consist of a loaded mode using a chassis dynamometer followed immediately by an idle mode as described under paragraphs (III)(c)(1) and (2) of this appendix.

(2) The test sequence shall begin only after the following requirements are met:

(i) The dynamometer shall be warmed up, in stabilized operating condition, adjusted, and calibrated in accordance with the procedures of appendix A to this subpart. Prior to each test, variable-curve dynamometers shall be checked for proper setting of the road-load indicator or road-load controller.

(ii) The vehicle shall be tested in as-received condition with all accessories turned off. The engine shall be at normal operating temperature (as indicated by a temperature gauge, temperature lamp, touch test on the radiator hose, or other visual observation for overheating).

(iii) The vehicle shall be operated during each mode of the test with the gear selector in the following position:

(A) In drive for automatic transmissions and in second (or third if more appropriate) for manual transmissions for the loaded mode;

(B) In park or neutral for the idle mode.

(iv) For all pre-1996 model year vehicles, a tachometer shall be attached to the vehicle in accordance with the analyzer manufacturer's instructions. For 1996 and newer model year vehicles the OBD data link connector will be used to monitor RPM. In the event that an OBD data link connector is not available or that an RPM signal is not available over the data link connector, a tachometer shall be used instead.

(v) The sample probe shall be inserted into the vehicle's tailpipe to a minimum depth of 10 inches. If the vehicle's exhaust system prevents insertion to this depth, a tailpipe extension shall be used.

(vi) The measured concentration of CO plus CO_2 shall be greater than or equal to six percent.

(c) *Overall test procedure.* The test timer shall start (tt=0) when the conditions specified in paragraph (III)(b)(2) of this appendix are met and the mode timer initiates as specified in paragraph (III)(c)(1) of this appendix. The test sequence shall have an overall maximum test time of 240 seconds (tt=240). The test shall be immediately terminated upon reaching the overall maximum test time.

(1) *Loaded mode*—(i) *Ford Motor Company and Honda vehicles.* (Optional) The engines of 1981–1987 Ford Motor Company vehicles and 1984–1985 Honda Preludes shall be shut off for not more than 10 seconds and restarted. This procedure may also be used for 1988–1989 Ford Motor Company vehicles but should not be used for other vehicles. The probe may be removed from the tailpipe or the sample pump turned off if necessary to reduce analyzer fouling during the restart procedure.

(ii) The mode timer shall start (mt=0) when the dynamometer speed is within the limits specified for the vehicle engine size according to the following schedule. If the dynamometer speed falls outside the limits for more than five seconds in one excursion, or 15 seconds over all excursions, the mode timer shall reset to zero and resume timing. The minimum mode length shall be determined as described in paragraph (III)(c)(1)(iii)(A) of this appendix. The maximum mode length shall be 90 seconds elapsed time (mt=90).

DYNAMOMETER TEST SCHEDULE

Gasoline engine size (cylinders)	Roll speed (mph)	Normal loading (brake horsepower)
4 or less	22–25	2.8–4.1
5–6	29–32	6.8–8.4
7 or more	32–35	8.4–10.8

(iii) The pass/fail analysis shall begin after an elapsed time of 10 seconds (mt=10). A pass or fail determination shall be made for the vehicle and the mode shall be terminated as follows:

(A) The vehicle shall pass the loaded mode and the mode shall be immediately terminated if, at any point between an elapsed time of 30 seconds (mt=30) and 90 seconds (mt=90), measured values are less than or equal to the applicable short test standards described in paragraph (a)(2) of this section.

(B) The vehicle shall fail the loaded mode and the mode shall be terminated if paragraph (III)(c)(1)(iii)(A) of this appendix is not satisfied by an elapsed time of 90 seconds (mt=90).

(C) *Optional.* The vehicle may fail the loaded mode and any subsequent idle mode shall be omitted if no exhaust gas concentration less than 1800 ppm HC is found by an elapsed time of 30 seconds (mt=30).

(2) *Idle mode*—(i) *Ford Motor Company and Honda vehicles.* (Optional) The engines of 1981–1987 Ford Motor Company vehicles and 1984–1985 Honda Preludes shall be shut off for not more than 10 seconds and restarted. This procedure may also be used for 1988–1989 Ford Motor Company vehicles but should not be used for other vehicles. The probe may be removed from the tailpipe or the sample pump turned off if necessary to reduce analyzer fouling during the restart procedure.

(ii) The mode timer shall start (mt=0) when the dynamometer speed is zero and the vehicle engine speed is between 350 and 1100 rpm. If engine speed exceeds 1100 rpm or falls below 350 rpm, the mode timer shall reset to zero and resume timing. The minimum idle mode length shall be determined as described in paragraph (II)(c)(2)(ii) of this appendix. The maximum idle mode length shall be 90 seconds elapsed time (mt=90).

(iii) The pass/fail analysis shall begin after an elapsed time of 10 seconds (mt=10). A pass or fail determination shall be made for the vehicle and the mode shall be terminated as follows:

(A) The vehicle shall pass the idle mode and the test shall be immediately terminated if, prior to an elapsed time of 30 seconds (mt=30), measured values are less than or equal to 100 ppm HC and 0.5 percent CO.

(B) The vehicle shall pass the idle mode and the test shall be terminated at the end of an elapsed time of 30 seconds (mt=30) if, prior to that time, the criteria of paragraph (III)(c)(2)(iii)(A) of this appendix are not satisfied, and the measured values are less than or equal to the applicable short test standards as described in paragraph (III)(a)(2) of this appendix.

(C) The vehicle shall pass the idle mode and the test shall be immediately terminated if, at any point between an elapsed time of 30 seconds (mt=30) and 90 seconds (mt=90), measured values are less than or equal to the applicable short test standards described in paragraph (III)(a)(2) of this appendix.

(D) The vehicle shall fail the idle mode and the test shall be terminated if none of the provisions of paragraphs (III)(c)(2)(iii)(A), (c)(2)(iii)(B), and (c)(2)(iii)(C) of this appendix is satisfied by an elapsed time of 90 seconds (mt=90).

(IV) Preconditioned IDLE TEST

(a) *General requirements*—(1) *Exhaust gas sampling algorithm.* The analysis of exhaust gas concentrations shall begin 10 seconds after the applicable test mode begins. Exhaust gas concentrations shall be analyzed at a minimum rate of two times per second. The measured value for pass/fail determinations shall be a simple running average of the measurements taken over five seconds.

(2) *Pass/fail determination.* A pass or fail determination shall be made for each applicable test mode based on a comparison of the short test standards contained in appendix C to this subpart, and the measured value for HC and CO as described in paragraph (IV)(a)(1) of this appendix. A vehicle shall pass the test mode if any pair of simultaneous values for HC and CO are below or equal to the applicable short test standards.

A vehicle shall fail the test mode if the values for either HC or CO, or both, in all simultaneous pairs of values are above the applicable standards.

(3) *Void test conditions.* The test shall immediately end and any exhaust gas measurements shall be voided if the measured concentration of CO plus CO_2 falls below six percent or the vehicle's engine stalls at any time during the test sequence.

(4) *Multiple exhaust pipes.* Exhaust gas concentrations from vehicle engines equipped with multiple exhaust pipes shall be sampled simultaneously.

(5) The test shall be immediately terminated upon reaching the overall maximum test time.

(b) *Test sequence.* (1) The test sequence shall consist of a first-chance test and a second-chance test as follows:

(i) The first-chance test, as described under paragraph (IV)(c) of this appendix, shall consist of a preconditioning mode followed by an idle mode.

(ii) The second-chance test, as described under paragraph (IV)(d) of this appendix, shall be performed only if the vehicle fails the first-chance test.

(2) The test sequence shall begin only after the following requirements are met:

(i) The vehicle shall be tested in as-received condition with the transmission in neutral or park and all accessories turned off. The engine shall be at normal operating temperature (as indicated by a temperature gauge, temperature lamp, touch test on the radiator hose, or other visual observation for overheating).

(ii) For all pre-1996 model year vehicles, a tachometer shall be attached to the vehicle in accordance with the analyzer manufacturer's instructions. For 1996 and newer model year vehicles the OBD data link connector will be used to monitor RPM. In the event that an OBD data link connector is not available or that an RPM signal is not available over the data link connector, a tachometer shall be used instead.

(iii) The sample probe shall be inserted into the vehicle's tailpipe to a minimum depth of 10 inches. If the vehicle's exhaust system prevents insertion to this depth, a tailpipe extension shall be used.

(iv) The measured concentration of CO plus CO2 shall be greater than or equal to six percent.

(c) *First-chance test.* The test timer shall start (tt=0) when the conditions specified in paragraph (IV)(b)(2) of this appendix are met. The test shall have an overall maximum test time of 200 seconds (tt=200). The first-chance test shall consist of a preconditioning mode followed immediately by an idle mode.

(1) *Preconditioning mode.* The mode timer shall start (mt=0) when the engine speed is between 2200 and 2800 rpm. The mode shall continue for an elapsed time of 30 seconds (mt=30). If engine speed falls below 2200 rpm or exceeds 2800 rpm for more than five seconds in any one excursion, or 15 seconds over all excursions, the mode timer shall reset to zero and resume timing.

(2) *Idle mode.* (i) The mode timer shall start (mt=0) when the vehicle engine speed is between 350 and 1100 rpm. If engine speed exceeds 1100 rpm or falls below 350 rpm, the mode timer shall reset to zero and resume timing. The minimum idle mode length shall be determined as described in paragraph (IV)(c)(2)(ii) of this appendix. The maximum idle mode length shall be 90 seconds elapsed time (mt=90).

(ii) The pass/fail analysis shall begin after an elapsed time of 10 seconds (mt=10). A pass or fail determination shall be made for the vehicle and the mode shall be terminated as follows:

(A) The vehicle shall pass the idle mode and the test shall be immediately terminated if, prior to an elapsed time of 30 seconds (mt=30), measured values are less than or equal to 100 ppm HC and 0.5 percent CO.

(B) The vehicle shall pass the idle mode and the test shall be terminated at the end of an elapsed time of 30 seconds (mt=30) if, prior to that time, the criteria of paragraph (IV)(c)(2)(ii)(A) of this appendix are not satisfied, and the measured values are less than or equal to the applicable short test standards as described in paragraph (IV)(a)(2) of this appendix.

(C) The vehicle shall pass the idle mode and the test shall be immediately terminated if, at any point between an elapsed time of 30 seconds (mt=30) and 90 seconds (mt=90), measured values are less than or equal to the applicable short test standards as described in paragraph (IV)(a)(2) of this section.

(D) The vehicle shall fail the idle mode and the test shall be terminated if none of the provisions of paragraphs (IV)(c)(2)(ii)(A), (B), and (C) of this appendix is satisfied by an elapsed time of 90 seconds (mt=90). Alternatively, the vehicle may be failed if the provisions of paragraphs (IV)(c)(2) (i) and (ii) of this appendix are not met within an elapsed time of 30 seconds.

(E) *Optional.* The vehicle may fail the first-chance test and the second-chance test shall be omitted if no exhaust gas concentration less than 1800 ppm HC is found at an elapsed time of 30 seconds (mt=30).

(d) *Second-chance test.* If the vehicle fails the first-chance test, the test timer shall reset to zero and a second-chance test shall be performed. The second-chance test shall have an overall maximum test time of 425 seconds. The test shall consist of a preconditioning mode followed immediately by an idle mode.

(1) *Preconditioning mode.* The mode timer shall start (mt=0) when engine speed is between 2200 and 2800 rpm. The mode shall continue for an elapsed time of 180 seconds (mt=180). If the engine speed falls below 2200 rpm or exceeds 2800 rpm for more than five seconds in any one excursion, or 15 seconds over all excursions, the mode timer shall reset to zero and resume timing.

(2) *Idle mode*—(i) *Ford Motor Company and Honda vehicles.* The engines of 1981–1987 Ford Motor Company vehicles and 1984–1985 Honda Preludes shall be shut off for not more than 10 seconds and then shall be restarted. The probe may be removed from the tailpipe or the sample pump turned off if necessary to reduce analyzer fouling during the restart procedure. This procedure may also be used for 1988–1989 Ford Motor Company vehicles but should not be used for other vehicles.

(ii) The mode timer shall start (mt=0) when the vehicle engine speed is between 350 and 1100 rpm. If the engine speed exceeds 1100 rpm or falls below 350 rpm, the mode timer shall reset to zero and resume timing. The minimum idle mode length shall be determined as described in paragraph (IV)(d)(2)(iii) of this appendix. The maximum idle mode length shall be 90 seconds elapsed time (mt=90).

(iii) The pass/fail analysis shall begin after an elapsed time of 10 seconds (mt=10). A pass or fail determination shall be made for the vehicle and the mode shall be terminated as follows:

(A) The vehicle shall pass the idle mode and the test shall be immediately terminated if, prior to an elapsed time of 30 seconds (mt=30), measured values are less than or equal to 100 ppm HC and 0.5 percent CO.

(B) The vehicle shall pass the idle mode and the test shall be terminated at the end of an elapsed time of 30 seconds (mt=30) if, prior to that time, the criteria of paragraph (IV)(d)(2)(iii)(A) of this appendix are not satisfied, and the measured values are less than or equal to the applicable short test standards as described in paragraph (IV)(a)(2) of this appendix.

(C) The vehicle shall pass the idle mode and the test shall be immediately terminated if, at any point between an elapsed time of 30 seconds (mt=30) and 90 seconds (mt=90), measured values are less than or equal to the applicable short test standards described in paragraph (IV)(a)(2) of this appendix.

(D) The vehicle shall fail the idle mode and the test shall be terminated if none of the provisions of paragraphs (IV)(d)(2)(iii) (A), (B), and (C) of this appendix is satisfied by an elapsed time of 90 seconds (mt=90).

(V) Idle Test With Loaded Preconditioning

(a) *General requirements*—(1) *Exhaust gas sampling algorithm.* The analysis of exhaust gas concentrations shall begin 10 seconds after the applicable test mode begins. Exhaust gas concentrations shall be analyzed at a minimum rate of two times per second. The measured value for pass/fail determinations shall be a simple running average of the measurements taken over five seconds.

(2) *Pass/fail determination.* A pass or fail determination shall be made for each applicable test mode based on a comparison of the short test standards contained in appendix C to this subpart, and the measured value for HC and CO as described in paragraph (V)(a)(1) of this appendix. A vehicle shall pass the test mode if any pair of simultaneous values for HC and CO are below or equal to the applicable short test standards. A vehicle shall fail the test mode if the values for either HC or CO, or both, in all simultaneous pairs of values are above the applicable standards.

(3) *Void test conditions.* The test shall immediately end and any exhaust gas measurements shall be voided if the measured concentration of CO plus CO_2 falls below six percent or the vehicle's engine stalls at any time during the test sequence.

(4) *Multiple exhaust pipes.* Exhaust gas concentrations from vehicle engines equipped with multiple exhaust pipes shall be sampled simultaneously.

(5) The test shall be immediately terminated upon reaching the overall maximum test time.

(b) *Test sequence.* (1) The test sequence shall consist of a first-chance test and a second-chance test as follows:

(i) The first-chance test, as described under paragraph (V)(c) of this appendix, shall consist of an idle mode.

(ii) The second-chance test as described under paragraph (V)(d) of this appendix shall be performed only if the vehicle fails the first-chance test.

(2) The test sequence shall begin only after the following requirements are met:

(i) The dynamometer shall be warmed up, in stabilized operating condition, adjusted, and calibrated in accordance with the procedures of appendix A to this subpart. Prior to each test, variable-curve dynamometers shall be checked for proper setting of the road-load indicator or road-load controller.

(ii) The vehicle shall be tested in as-received condition with all accessories turned off. The engine shall be at normal operating temperature (as indicated by a temperature gauge, temperature lamp, touch test on the radiator hose, or other visual observation for overheating).

(iii) The vehicle shall be operated during each mode of the test with the gear selector in the following position:

(A) In drive for automatic transmissions and in second (or third if more appropriate) for manual transmissions for the loaded preconditioning mode;

(B) In park or neutral for the idle mode.

(iv) For all pre-1996 model year vehicles, a tachometer shall be attached to the vehicle in accordance with the analyzer manufacturer's instructions. For 1996 and newer model year vehicles the OBD data link connector will be used to monitor RPM. In the event that an OBD data link connector is not available or that an RPM signal is not available over the data link connector, a tachometer shall be used instead.

(v) The sample probe shall be inserted into the vehicle's tailpipe to a minimum depth of 10 inches. If the vehicle's exhaust system prevents insertion to this depth, a tailpipe extension shall be used.

(vi) The measured concentration of CO plus CO_2 shall be greater than or equal to six percent.

(c) *First-chance test.* The test timer shall start (tt=0) when the conditions specified in paragraph (V)(b)(2) of this appendix are met. The test shall have an overall maximum test time of 155 seconds (tt=155). The first-chance test shall consist of an idle mode only.

(1) The mode timer shall start (mt=0) when the vehicle engine speed is between 350 and 1100 rpm. If the engine speed exceeds 1100 rpm or falls below 350 rpm, the mode timer shall reset to zero and resume timing. The minimum mode length shall be determined as described in paragraph (V)(c)(2) of this appendix. The maximum mode length shall be 90 seconds elapsed time (mt=90).

(2) The pass/fail analysis shall begin after an elapsed time of 10 seconds (mt=10). A pass or fail determination shall be made for the vehicle and the mode shall be terminated as follows:

(i) The vehicle shall pass the idle mode and the test shall be immediately terminated if, prior to an elapsed time of 30 seconds (mt=30), measured values are less than or equal to 100 ppm HC and 0.5 percent CO.

(ii) The vehicle shall pass the idle mode and the test shall be terminated at the end of an elapsed time of 30 seconds (mt=30) if, prior to that time, the criteria of paragraph (V)(c)(2)(i) of this appendix are not satisfied, and the measured values are less than or equal to the applicable short test standards as described in paragraph (V)(a)(2) of this appendix.

(iii) The vehicle shall pass the idle mode and the test shall be immediately terminated if, at any point between an elapsed time of 30 seconds (mt=30) and 90 seconds (mt=90), the measured values are less than or equal to the applicable short test standards as described in paragraph (V)(a)(2) of this appendix.

(iv) The vehicle shall fail the idle mode and the test shall be terminated if none of the provisions of paragraphs (V)(c)(2)(i), (ii), and (iii) of this appendix is satisfied by an elapsed time of 90 seconds (mt=90). Alternatively, the vehicle may be failed if the provisions of paragraphs (V)(c)(2) (i) and (ii) of this appendix are not met within an elapsed time of 30 seconds.

(v) *Optional.* The vehicle may fail the first-chance test and the second-chance test shall be omitted if no exhaust gas concentration less than 1800 ppm HC is found at an elapsed time of 30 seconds (mt=30).

(d) *Second-chance test.* If the vehicle fails the first-chance test, the test timer shall reset to zero (tt=0) and a second-chance test shall be performed. The second-chance test shall have an overall maximum test time of 200 seconds (tt=200). The test shall consist of a preconditioning mode using a chassis dynamometer, followed immediately by an idle mode.

(1) *Preconditioning mode.* The mode timer shall start (mt=0) when the dynamometer speed is within the limits specified for the vehicle engine size in accordance with the following schedule. The mode shall continue for a minimum elapsed time of 30 seconds (mt=30). If the dynamometer speed falls outside the limits for more than five seconds in one excursion, or 15 seconds over all excursions, the mode timer shall reset to zero and resume timing.

Gasoline engine size (cylinders)	Dynamometer test schedule	
	Roll speed (mph)	Normal loading (brake horsepower)
4 or less	22–25	2.8–4.1
5–6	29–32	6.8–8.4
7 or more	32–35	8.4–10.8

(2) *Idle mode.* (i) *Ford Motor Company and Honda vehicles.* (Optional) The engines of 1981–1987 Ford Motor Company vehicles and 1984–1985 Honda Preludes shall be shut off for not more than 10 seconds and restarted. This procedure may also be used for 1988–1989 Ford Motor Company vehicles but should not be used for other vehicles. The probe may be removed from the tailpipe or the sample pump turned off if necessary to reduce analyzer fouling during the restart procedure.

(ii) The mode timer shall start (mt=0) when the dynamometer speed is zero and the vehicle engine speed is between 350 and 1100 rpm. If the engine speed exceeds 1100 rpm or falls below 350 rpm, the mode timer shall reset to zero and resume timing. The minimum idle mode length shall be determined as described in paragraph (V)(d)(2)(ii) of this appendix. The maximum idle mode length shall be 90 seconds elapsed time (mt=90).

(iii) The pass/fail analysis shall begin after an elapsed time of 10 seconds (mt=10). A pass or fail determination shall be made for the vehicle and the mode shall be terminated as follows:

(A) The vehicle shall pass the idle mode and the test shall be immediately terminated if, prior to an elapsed time of 30 seconds (mt=30), measured values are less than or equal to 100 ppm HC and 0.5 percent CO.

(B) The vehicle shall pass the idle mode and the test shall be terminated at the end of an elapsed time of 30 seconds (mt=30) if, prior to that time, the criteria of paragraph (V)(d)(2)(ii)(A) of this appendix are not satisfied, and the measured values are less than or equal to the applicable short test standards as described in paragraph (V)(a)(2) of this appendix.

(C) The vehicle shall pass the idle mode and the test shall be immediately terminated if, at any point between an elapsed time of 30 seconds (mt=30) and 90 seconds (mt=90), the measured values are less than or equal to the applicable short test standards as described in paragraph (V)(a)(2) of this appendix.

(D) The vehicle shall fail the idle mode and the test shall be terminated if none of the provisions of paragraphs (V)(d)(2)(ii)(A), (B), and (C) of this appendix is satisfied by an elapsed time of 90 seconds (mt=90).

(VI) Preconditioned Two Speed Idle Test

(a) *General requirements*—(1) *Exhaust gas sampling algorithm.* The analysis of exhaust gas concentrations shall begin 10 seconds after the applicable test mode begins. Exhaust gas concentrations shall be analyzed at a minimum rate of two times per second. The measured value for pass/fail determinations shall be a simple running average of the measurements taken over five seconds.

(2) *Pass/fail determination.* A pass or fail determination shall be made for each applicable test mode based on a comparison of the short test standards contained in appendix C to this subpart, and the measured value for HC and CO as described in paragraph (VI)(a)(1) of this appendix. A vehicle shall pass the test mode if any pair of simultaneous values for HC and CO are below or equal to the applicable short test standards. A vehicle shall fail the test mode if the values for either HC or CO, or both, in all simultaneous pairs of values are above the applicable standards.

(3) *Void test conditions.* The test shall immediately end and any exhaust gas measurements shall be voided if the measured concentration of CO plus CO_2 falls below six percent or the vehicle's engine stalls at any time during the test sequence.

(4) *Multiple exhaust pipes.* Exhaust gas concentrations from vehicle engines equipped with multiple exhaust pipes shall be sampled simultaneously.

(5) The test shall be immediately terminated upon reaching the overall maximum test time.

(b) *Test sequence.* (1) The test sequence shall consist of a first-chance test and a second-chance test as follows:

(i) The first-chance test, as described under paragraph (VI)(c) of this appendix, shall consist of a first-chance high-speed mode followed immediately by a first-chance idle mode.

(ii) The second-chance test as described under paragraph (VI)(d) of this appendix shall be performed only if the vehicle fails the first-chance test.

(2) The test sequence shall begin only after the following requirements are met:

(i) The vehicle shall be tested in as-received condition with the transmission in neutral or park and all accessories turned off. The engine shall be at normal operating temperature (as indicated by a temperature gauge, temperature lamp, touch test on the radiator hose, or other visual observation for overheating).

(ii) For all pre-1996 model year vehicles, a tachometer shall be attached to the vehicle in accordance with the analyzer manufacturer's instructions. For 1996 and newer model year vehicles the OBD data link connector will be used to monitor rpm. In the event that an OBD data link connector is not available or that an rpm signal is not available over the data link connector, a tachometer shall be used instead.

(iii) The sample probe shall be inserted into the vehicle's tailpipe to a minimum depth of 10 inches. If the vehicle's exhaust system prevents insertion to this depth, a tailpipe extension shall be used.

(iv) The measured concentration of CO plus CO_2 shall be greater than or equal to six percent.

(c) *First-chance test.* The test timer shall start (tt=0) when the conditions specified in paragraph (VI)(b)(2) of this appendix are met. The test shall have an overall maximum test time of 290 seconds (tt=290). The first-chance test shall consist of a high-speed mode followed immediately by an idle mode.

(1) *First-chance high-speed mode.* (i) The mode timer shall reset (mt=0) when the vehicle engine speed is between 2200 and 2800 rpm. If the engine speed falls below 2200 rpm or exceeds 2800 rpm for more than two seconds in one excursion, or more than six seconds over all excursions within 30 seconds of the final measured value used in the pass/fail determination, the measured value shall be invalidated and the mode continued. If any excursion lasts for more than ten seconds, the mode timer shall reset to zero (mt=0) and timing resumed. The high-speed mode length shall be 90 seconds elapsed time (mt=90).

(ii) The pass/fail analysis shall begin after an elapsed time of 10 seconds (mt=10). A pass or fail determination shall be made for the vehicle and the mode shall be terminated as follows:

(A) The vehicle shall pass the high-speed mode and the mode shall be terminated at an elapsed time of 90 seconds (mt=90) if any measured values are less than or equal to the applicable short test standards as described in paragraph (VI)(a)(2) of this appendix.

(B) The vehicle shall fail the high-speed mode and the mode shall be terminated if the requirements of paragraph (VI)(c)(1)(ii)(A) of this appendix are not satisfied by an elapsed time of 90 seconds (mt=90).

(C) *Optional.* The vehicle shall fail the first-chance test and any subsequent test shall be omitted if no exhaust gas concentration lower than 1800 ppm HC is found at an elapsed time of 30 seconds (mt=30).

(2) *First-chance idle mode.* (i) The mode timer shall start (mt=0) when the vehicle engine speed is between 350 and 1100 rpm. If the engine speed exceeds 1100 rpm or falls below 350 rpm, the mode timer shall reset to zero and resume timing. The minimum first-chance idle mode length shall be determined as described in paragraph (VI)(c)(2)(ii) of this appendix. The maximum first-chance idle mode length shall be 90 seconds elapsed time (mt=90).

(ii) The pass/fail analysis shall begin after an elapsed time of 10 seconds (mt=10). A pass or fail determination shall be made for the vehicle and the mode shall be terminated as follows:

(A) The vehicle shall pass the idle mode and the test shall be immediately terminated if, prior to an elapsed time of 30 seconds (mt=30), measured values are less than or equal to 100 ppm HC and 0.5 percent CO.

(B) The vehicle shall pass the idle mode and the test shall be terminated at the end of an elapsed time of 30 seconds (mt=30) if, prior to that time, the criteria of paragraph (VI)(c)(2)(ii)(A) of this appendix are not satisfied, and the measured values are less than or equal to the applicable short test standards as described in paragraph (VI)(a)(2) of this appendix.

(C) The vehicle shall pass the idle mode and the test shall be immediately terminated if, at any point between an elapsed time of 30 seconds (mt=30) and 90 seconds (mt=90), the measured values are less than or equal to the applicable short test standards as described in paragraph (VI)(a)(2) of this appendix.

(D) The vehicle shall fail the idle mode and the test shall be terminated if none of the provisions of paragraphs (VI)(c)(2)(ii) (A), (B), and (C) of this appendix is satisfied by an elapsed time of 90 seconds (mt=90). Alternatively, the vehicle may be failed if the provisions of paragraphs (VI)(c)(2)(i) and (ii) of this appendix are not met within the elapsed time of 30 seconds.

(d) *Second-chance test.* (1) If the vehicle fails either mode of the first-chance test, the test timer shall reset to zero (tt=0) and a second-chance test shall commence. The second-chance test shall be performed based on the first-chance test failure mode or modes as follows:

(A) If the vehicle failed only the first-chance high-speed mode, the second-chance test shall consist of a second-chance high-speed mode as described in paragraph (VI)(d)(2) of this appendix. The overall maximum test time shall be 280 seconds (tt=280).

(B) If the vehicle failed only the first-chance idle mode, the second-chance test shall consist of a second-chance pre-conditioning mode followed immediately by a second-chance idle mode as described in paragraphs (VI)(d) (3) and (4) of this appendix. The overall maximum test time shall be 425 seconds (tt=425).

(C) If both the first-chance high-speed mode and first-chance idle mode were failed, the second-chance test shall consist of the second-chance high-speed mode followed immediately by the second-chance idle mode as described in paragraphs (VI)(d) (2) and (4) of this appendix. However, if during this second-chance procedure the vehicle fails the second-chance high-speed mode, then the second-chance idle mode may be eliminated. The overall maximum test time shall be 425 seconds (tt=425).

(2) *Second-chance high-speed mode*—(i) *Ford Motor Company and Honda vehicles.* The engines of 1981–1987 Ford Motor Company vehicles and 1984–1985 Honda Preludes shall be shut off for not more than 10 seconds and then shall be restarted. The probe may be removed from the tailpipe or the sample pump turned off if necessary to reduce analyzer fouling during the restart procedure. This procedure may also be used for 1988–1989 Ford Motor Company vehicles but should not be used for other vehicles.

(ii) The mode timer shall reset (mt=0) when the vehicle engine speed is between 2200 and 2800 rpm. If the engine speed falls below 2200 rpm or exceeds 2800 rpm for more than two seconds in one excursion, or more than six seconds over all excursions within 30 seconds of the final measured value used in the pass/fail determination, the measured value shall be invalidated and the mode continued. The minimum second-chance high-speed mode length shall be determined as described in paragraphs (VI)(d)(2) (iii) and (iv) of this appendix. If any excursion lasts for more than ten seconds, the mode timer shall reset to zero (mt=0) and timing resumed. The maximum second-chance high-speed mode length shall be 180 seconds elapsed time (mt=180).

(iii) In the case where the second-chance high-speed mode is *not* followed by the second-chance idle mode, the pass/fail analysis shall begin after an elapsed time of 10 seconds (mt=10). A pass or fail determination shall be made for the vehicle and the mode shall be terminated as follows:

(A) The vehicle shall pass the high-speed mode and the test shall be immediately terminated if, prior to an elapsed time of 30 seconds (mt=30), measured values are less than or equal to 100 ppm HC and 0.5 percent CO.

(B) The vehicle shall pass the high-speed mode and the test shall be terminated if at the end of an elapsed time of 30 seconds (mt=30) if, prior to that time, the criteria of paragraph (VI)(d)(2)(iii)(A) of this appendix are not satisfied, and the measured values are less than or equal to the applicable short test standards as described in paragraph (VI)(a)(2) of this appendix.

(C) The vehicle shall pass the high-speed mode and the test shall be immediately terminated if, at any point between an elapsed time for 30 seconds (mt=30) and 180 seconds (mt=180), the measured values are less than or equal to the applicable short test standards as described in paragraph (VI)(a)(2) of this appendix.

(D) The vehicle shall fail the high-speed mode and the test shall be terminated if none of the provisions of paragraphs (VI)(d)(2)(iii) (A), (B), and (C) of this appendix is satisfied by an elapsed time of 180 seconds (mt=180).

(iv) In the case where the second-chance high-speed mode *is* followed by the second-chance idle mode, the pass/fail analysis shall begin after an elapsed time of 10 seconds (mt=10). A pass or fail determination shall be made for the vehicle and the mode shall be terminated as follows:

(A) The vehicle shall pass the high-speed mode and the mode shall be terminated at the end of an elapsed time of 180 seconds (mt=180) if any measured values are less than or equal to the applicable short test standards as described in paragraph (VI)(a)(2) of this appendix.

(B) The vehicle shall fail the high-speed mode and the mode shall be terminated if paragraph (VI)(d)(2)(iv)(A) of this appendix is not satisfied by an elapsed time of 180 seconds (mt=180).

(3) *Second-chance preconditioning mode.* The mode timer shall start (mt=0) when engine speed is between 2200 and 2800 rpm. The mode shall continue for an elapsed time of 180 seconds (mt=180). If the engine speed falls below 2200 rpm or exceeds 2800 rpm for more than five seconds in any one excursion, or 15 seconds over all excursions, the mode timer shall reset to zero and resume timing.

(4) *Second-chance idle mode*—(i) *Ford Motor Company and Honda vehicles.* The engines of 1981–1987 Ford Motor Company vehicles and 1984–1985 Honda Preludes shall be shut off for not more than 10 seconds and then shall be restarted. The probe may be removed from the tailpipe or the sample pump turned off if necessary to reduce analyzer fouling during the restart procedure. This procedure may also be used for 1988–1989 Ford Motor Company vehicles but should not be used for other vehicles.

(ii) The mode timer shall start (mt=0) when the vehicle engine speed is between 350 and 1100 rpm. If the engine exceeds 1100 rpm or falls below 350 rpm the mode timer shall reset to zero and resume timing. The minimum second-chance idle mode length shall be determined as described in paragraph (VI)(d)(4)(iii) of this appendix. The maximum second-chance idle mode length shall be 90 seconds elapsed time (mt=90).

(iii) The pass/fail analysis shall begin after an elapsed time of 10 seconds (mt=10). A pass or fail determination shall be made for the vehicle and the mode shall be terminated as follows:

(A) The vehicle shall pass the second-chance idle mode and the test shall be immediately terminated if, prior to an elapsed time of 30 seconds (mt=30), measured values are less than or equal to 100 ppm HC and 0.5 percent CO.

(B) The vehicle shall pass the second-chance idle mode and the test shall be terminated at the end of an elapsed time of 30 seconds (mt=30) if, prior to that time, the criteria of paragraph (VI)(d)(4)(iii)(A) of this appendix are not satisfied, and the measured values are less than or equal to the applicable short test standards as described in paragraph (VI)(a)(2) of this appendix.

(C) The vehicle shall pass the second-chance idle mode and the test shall be immediately terminated if, at any point between an elapsed time of 30 seconds (mt=30) and 90 seconds (mt=90), measured values are less than or equal to the applicable short test standards described in paragraph (VI)(a)(2) of this appendix.

(D) The vehicle shall fail the second-chance idle mode and the test shall be terminated if none of the provisions of paragraphs (VI)(d)(4)(iii) (A), (B), and (C) of this appendix is satisfied by an elapsed time of 90 seconds (mt=90).

[57 FR 52987, Nov. 5, 1992, as amended at 61 FR 40946, Aug. 6, 1996]

APPENDIX C TO SUBPART S—STEADY-STATE SHORT TEST STANDARDS

(I) Short Test Standards for 1981 and Later Model Year Light-Duty Vehicles

For 1981 and later model year light-duty vehicles for which any of the test procedures described in appendix B to this subpart are utilized to establish Emissions Performance Warranty eligibility (i.e., 1981 and later model year light-duty vehicles at low altitude and 1982 and later model year vehicles at high altitude to which high altitude certification standards of 1.5 gpm HC and 15 gpm CO or less apply), short test emissions for all tests and test modes shall not exceed:

(a) Hydrocarbons: 220 ppm as hexane.

(b) Carbon monoxide: 1.2%.

(II) Short Test Standards for 1981 and Later Model Year Light-Duty Trucks

For 1981 and later model year light-duty trucks for which any of the test procedures described in appendix B to this subpart are utilized to establish Emissions Performance Warranty eligibility (i.e., 1981 and later model year light-duty trucks at low altitude and 1982 and later model year trucks at high altitude to which high altitude certification standards of 2.0 gpm HC and 26 gpm CO or less apply), short test emissions for all tests and test modes shall not exceed:

(a) Hydrocarbons: 220 ppm as hexane.

(b) Carbon monoxide: 1.2%.

APPENDIX D TO SUBPART S—STEADY-STATE SHORT TEST EQUIPMENT

(I) Steady-State Test Exhaust Analysis System

(a) *Sampling system*—(1) *General requirements.* The sampling system for steady-state short tests shall, at a minimum, consist of a tailpipe probe, a flexible sample line, a water removal system, particulate trap, sample pump, flow control components, tachometer or dynamometer, analyzers for HC, CO, and CO_2, and digital displays for exhaust concentrations of HC, CO, and CO_2, and engine rpm. Materials that are in contact with the gases sampled shall not contaminate or change the character of the gases to be analyzed, including gases from alcohol fueled vehicles. The probe shall be capable of being inserted to a depth of at least ten inches into the tailpipe of the vehicle being tested, or into an extension boot if one is used. A digital display for dynamometer speed and load shall be included if the test procedures described in appendix B to this subpart, paragraphs (III) and (V), are conducted. Minimum specifications for optional NO analyzers are also described in this appendix. The analyzer system shall be able to test, as specified in at least one section in appendix B to this subpart, all model vehicles in service at the time of sale of the analyzer.

(2) *Temperature operating range.* The sampling system and all associated hardware shall be of a design certified to operate within the performance specifications described in paragraph (I)(b) of this appendix in ambient air temperatures ranging from 41 to 110 degrees Fahrenheit. The analyzer system shall, where necessary, include features to keep the sampling system within the specified range.

(3) *Humidity operating range.* The sampling system and all associated hardware shall be of a design certified to operate within the performance specifications described in paragraph (I)(b) of this appendix at a minimum of 80 percent relative humidity throughout the required temperature range.

(4) *Barometric pressure compensation.* Barometric pressure compensation shall be provided. Compensation shall be made for elevations up to 6,000 feet (above mean sea level). At any given altitude and ambient conditions specified in paragraph (I)(b) of this appendix, errors due to barometric pressure changes of ±2 inches of mercury shall not exceed the accuracy limits specified in paragraph (I)(b) of this appendix.

(5) *Dual sample probe requirements.* When testing a vehicle with dual exhaust pipes, a dual sample probe of a design certified by the analyzer manufacturer to provide equal flow in each leg shall be used. The equal flow requirement is considered to be met if the flow rate in each leg of the probe has been measured under two sample pump flow rates (the normal rate and a rate equal to the onset of low flow), and if the flow rates in each of the legs are found to be equal to each other (within 15% of the flow rate in the leg having lower flow).

(6) *System lockout during warm-up.* Functional operation of the gas sampling unit shall remain disabled through a system lockout until the instrument meets stability and warm-up requirements. The instrument shall be considered ''warmed up'' when the zero and span readings for HC, CO, and CO_2 have stabilized, within ±3% of the full range of low scale, for five minutes without adjustment.

(7) *Electromagnetic isolation and interference.* Electromagnetic signals found in an automotive service environment shall not cause malfunctions or changes in the accuracy in the electronics of the analyzer system. The instrument design shall ensure that readings do not vary as a result of electromagnetic radiation and induction devices normally found in the automotive service environment, including high energy vehicle ignition systems, radio frequency transmission radiation sources, and building electrical systems.

(8) *Vibration and shock protection.* System operation shall be unaffected by the vibration and shock encountered under the normal operating conditions encountered in an automotive service environment.

(9) *Propane equivalency factor.* The propane equivalency factor shall be displayed in a manner that enables it to be viewed conveniently, while permitting it to be altered only by personnel specifically authorized to do so.

(b) *Analyzers*—(1) *Accuracy.* The analyzers shall be of a design certified to meet the following accuracy requirements when calibrated to the span points specified in appendix A to this subpart:

Channel	Range	Accuracy	Noise	Repeatability
HC, ppm	0–400	±12	6	8
as hexane	401–1000	±30	10	15
	1001–2000	±80	20	30
CO, %	0–2.00	±0.06	0.02	0.03

Channel	Range	Accuracy	Noise	Repeatability
	2.01–5.00	±0.15	0.06	0.08
	5.01–9.99	±0.40	0.10	0.15
CO_2, %	0–4.0	± 0.6	0.2	0.3
	4.1–14.0	±0.5	0.2	0.3
NO, ppm	0–1000	±32	16	20
	1001–2000	±60	25	30
	2001–4000	±120	50	60

(2) *Minimum analyzer display resolution.* The analyzer electronics shall have sufficient resolution to achieve the following:

HC ..... 1ppm HC as hexane.
CO ..... 0.01% CO.
CO_2 ..... 0.1% CO_2.
NO ..... 1ppm NO.
RPM ..... 1rpm.

(3) *Response time.* The response time from the probe to the display for HC, CO, and CO_2 analyzers shall not exceed eight seconds to 90% of a step change in input. For NO analyzers, the response time shall not exceed twelve seconds to 90% of a step change in input.

(4) *Display refresh rate.* Dynamic information being displayed shall be refreshed at a minimum rate of twice per second.

(5) *Interference effects.* The interference effects for non-interest gases shall not exceed ±10 ppm for hydrocarbons, ±0.05 percent for carbon monoxide, ±0.20 percent for carbon dioxide, and ±20 ppm for oxides of nitrogen.

(6) *Low flow indication.* The analyzer shall provide an indication when the sample flow is below the acceptable level. The sampling system shall be equipped with a flow meter (or equivalent) that shall indicate sample flow degradation when meter error exceeds three percent of full scale, or causes system response time to exceed 13 seconds to 90 percent of a step change in input, whichever is less.

(7) *Engine speed detection.* The analyzer shall utilize a tachometer capable of detecting engine speed in revolutions per minute (rpm) with a 0.5 second response time and an accuracy of ±3% of the true rpm.

(8) *Test and mode timers.* The analyzer shall be capable of simultaneously determining the amount of time elapsed in a test, and in a mode within that test.

(9) *Sample rate.* The analyzer shall be capable of measuring exhaust concentrations of gases specified in this section at a minimum rate of twice per second.

(c) *Demonstration of conformity.* The analyzer shall be demonstrated to the satisfaction of the inspection program manager, through acceptance testing procedures, to meet the requirements of this section and that it is capable of being maintained as required in appendix A to this subpart.

(II) Steady-State Test Dynamometer

(a) The chassis dynamometer for steady-state short tests shall provide the following capabilities:

(1) *Power absorption.* The dynamometer shall be capable of applying a load to the vehicle's driving tire surfaces at the horsepower and speed levels specified in paragraph (II)(b) of this appendix.

(2) *Short-term stability.* Power absorption at constant speed shall not drift more than ±0.5 horsepower (hp) during any single test mode.

(3) *Roll weight capacity.* The dynamometer shall be capable of supporting a driving axle weight up to four thousand (4,000) pounds or greater.

(4) *Between roll wheel lifts.* These shall be controllable and capable of lifting a minimum of four thousand (4,000) pounds.

(5) *Roll brakes.* Both rolls shall be locked when the wheel lift is up.

(6) *Speed indications.* The dynamometer speed display shall have a range of 0–60 mph, and a resolution and accuracy of at least 1 mph.

(7) *Safety interlock.* A roll speed sensor and safety interlock circuit shall be provided which prevents the application of the roll brakes and upward lift movement at any roll speed above 0.5 mph.

(b) The dynamometer shall produce the load speed relationships specified in paragraphs (III) and (V) of appendix B to this subpart.

(III) Transient Emission Test Equipment [Reserved]

(IV) Evaporative System Purge Test Equipment [Reserved]

(V) Evaporative System Integrity Test Equipment [Reserved]

[57 FR 52987, Nov. 5, 1992, as amended at 58 FR 59367, Nov. 9, 1993]

APPENDIX E TO SUBPART S—TRANSIENT TEST DRIVING CYCLE

(I) *Driver's trace.* All excursions in the transient driving cycle shall be evaluated by the procedures defined in §86.115–78(b)(1) and §86.115(c) of this chapter. Excursions exceeding these limits shall cause a test to be void. In addition, provisions shall be available to utilize cycle validation criteria, as described in §86.1341–90 of this chapter, for trace speed versus actual speed as a means to determine a valid test.

(II) *Driving cycle.* The following table shows the time speed relationship for the transient IM240 test procedure.

Second	MPH
0	0
1	0

Second	MPH
2	0
3	0
4	0
5	3
6	5.9
7	8.6
8	11.5
9	14.3
10	16.9
11	17.3
12	18.1
13	20.7
14	21.7
15	22.4
16	22.5
17	22.1
18	21.5
19	20.9
20	20.4
21	19.8
22	17
23	14.9
24	14.9
25	15.2
26	15.5
27	16
28	17.1
29	19.1
30	21.1
31	22.7
32	22.9
33	22.7
34	22.6
35	21.3
36	19
37	17.1
38	15.8
39	15.8
40	17.7
41	19.8
42	21.6
43	23.2
44	24.2
45	24.6
46	24.9
47	25
48	25.7
49	26.1
50	26.7
51	27.5
52	28.6
53	29.3
54	29.8
55	30.1
56	30.4
57	30.7
58	30.7
59	30.5
60	30.4
61	30.3
62	30.4
63	30.8
64	30.4
65	29.9
66	29.5
67	29.8
68	30.3
69	30.7
70	30.9
71	31
72	30.9
73	30.4
74	29.8
75	29.9

Second	MPH
76	30.2
77	30.7
78	31.2
79	31.8
80	32.2
81	32.4
82	32.2
83	31.7
84	28.6
85	25.1
86	21.6
87	18.1
88	14.6
89	11.1
90	7.6
91	4.1
92	0.6
93	0
94	0
95	0
96	0
97	0
98	3.3
99	6.6
100	9.9
101	13.2
102	16.5
103	19.8
104	22.2
105	24.3
106	25.8
107	26.4
108	25.7
109	25.1
110	24.7
111	25.2
112	25.4
113	27.2
114	26.5
115	24
116	22.7
117	19.4
118	17.7
119	17.2
120	18.1
121	18.6
122	20
123	20.7
124	21.7
125	22.4
126	22.5
127	22.1
128	21.5
129	20.9
130	20.4
131	19.8
132	17
133	17.1
134	15.8
135	15.8
136	17.7
137	19.8
138	21.6
139	22.2
140	24.5
141	24.7
142	24.8
143	24.7
144	24.6
145	24.6
146	25.1
147	25.6
148	25.7
149	25.4

Second	MPH
150	24.9
151	25
152	25.4
153	26
154	26
155	25.7
156	26.1
157	26.7
158	27.3
159	30.5
160	33.5
161	36.2
162	37.3
163	39.3
164	40.5
165	42.1
166	43.5
167	45.1
168	46
169	46.8
170	47.5
171	47.5
172	47.3
173	47.2
174	47.2
175	47.4
176	47.9
177	48.5
178	49.1
179	49.5
180	50
181	50.6
182	51
183	51.5
184	52.2
185	53.2
186	54.1
187	54.6
188	54.9
189	55
190	54.9
191	54.6
192	54.6
193	54.8
194	55.1
195	55.5
196	55.7
197	56.1
198	56.3
199	56.6
200	56.7
201	56.7
202	56.3
203	56
204	55
205	53.4
206	51.6
207	51.8
208	52.1
209	52.5
210	53
211	53.5
212	54
213	54.9
214	55.4
215	55.6
216	56
217	56
218	55.8
219	55.2
220	54.5
221	53.6
222	52.5
223	51.5
224	50.5
225	48
226	44.5
227	41
228	37.5
229	34
230	30.5
231	27
232	23.5
233	20
234	16.5
235	13
236	9.5
237	6
238	2.5
239	0

[57 FR 52987, Nov. 5, 1992, as amended at 58 FR 59367, Nov. 9, 1993]

Subpart T—Conformity to State or Federal Implementation Plans of Transportation Plans, Programs, and Projects Developed, Funded or Approved Under Title 23 U.S.C. or the Federal Transit Laws

§ 51.390 Implementation plan revision.

(a) States with areas subject to this subpart and part 93, subpart A, of this chapter must submit to the EPA and DOT a revision to their implementation plan which contains criteria and procedures for DOT, MPOs and other State or local agencies to assess the conformity of transportation plans, programs, and projects, consistent with this subpart and part 93, subpart A, of this chapter. This revision is to be submitted by November 25, 1994 (or within 12 months of an area's redesignation from attainment to nonattainment, if the State has not previously submitted such a revision). Further revisions to the implementation plan required by amendments to part 93, subpart A, of this chapter must be submitted within 12 months of the date of publication of such final amendments. EPA will provide DOT with a 30-day comment period before taking action to approve or disapprove the submission. A State's conformity provisions may contain criteria and procedures more stringent than the requirements described in this subpart and part 93, subpart A, of this chapter only if the State's conformity provisions apply equally to non-federal as well as Federal entities.

(b) The Federal conformity rules under part 93, subpart A, of this chapter, in addition to any existing applicable State requirements, establish the conformity criteria and procedures necessary to meet the requirements of Clean Air Act section 176(c) until such time as EPA approves the conformity implementation plan revision required by this subpart. Following EPA approval of the State conformity provisions (or a portion thereof) in a revision to the applicable implementation plan, conformity determinations would be governed by the approved (or approved portion of the) State criteria and procedures. The Federal conformity regulations contained in part 93, subpart A, of this chapter would apply only for the portion, if any, of the State's conformity provisions that is not approved by EPA. In addition, any previously applicable implementation plan conformity requirements remain enforceable until the State submits a revision to its applicable implementation plan to specifically remove them and that revision is approved by EPA.

(c) The implementation plan revision required by this section must meet all of the requirements of part 93, subpart A, of this chapter.

(d) In order for EPA to approve the implementation plan revision submitted to EPA and DOT under this subpart, the plan must address all requirements of part 93, subpart A, of this chapter in a manner which gives them full legal effect. In particular, the revision shall incorporate the provisions of the following sections of part 93, subpart A, of this chapter in verbatim form, except insofar as needed to clarify or to give effect to a stated intent in the revision to establish criteria and procedures more stringent than the requirements stated in the following sections of this chapter: §§93.101, 93.102, 93.103, 93.104, 93.106, 93.109, 93.110, 93.111, 93.112, 93.113, 93.114, 93.115, 93.116, 93.117, 93.118, 93.119, 93.120, 93.121, 93.126, and 93.127.

[62 FR 43801, Aug. 15, 1997]

Subpart U—Economic Incentive Programs

SOURCE: 59 FR 16710, Apr. 7, 1994, unless otherwise noted.

§51.490 Applicability.

(a) The rules in this subpart apply to any statutory economic incentive program (EIP) submitted to the EPA as an implementation plan revision to comply with sections 182(g)(3), 182(g)(5), 187(d)(3), or 187(g) of the Act. Such programs may be submitted by any authorized governmental organization, including States, local governments, and Indian governing bodies.

(b) The provisions contained in these rules, except as explicitly exempted, shall also serve as the EPA's policy guidance on discretionary EIP's submitted as implementation plan revisions for any purpose other than to comply with the statutory requirements specified in paragraph (a) of this section.

§51.491 Definitions.

Act means the Clean Air Act as amended November 15, 1990.

Actual emissions means the emissions of a pollutant from an affected source determined by taking into account actual emission rates associated with normal source operation and actual or representative production rates (i.e., capacity utilization and hours of operation).

Affected source means any stationary, area, or mobile source of a criteria pollutant(s) to which an EIP applies. This term applies to sources explicitly included at the start of a program, as well as sources that voluntarily enter (i.e., opt into) the program.

Allowable emissions means the emissions of a pollutant from an affected source determined by taking into account the most stringent of all applicable SIP emissions limits and the level of emissions consistent with source compliance with all Federal requirements related to attainment and maintenance of the NAAQS and the production rate associated with the maximum rated capacity and hours of operation

(unless the source is subject to federally enforceable limits which restrict the operating rate, or hours of operation, or both).

Area sources means stationary and nonroad sources that are too small and/or too numerous to be individually included in a stationary source emissions inventory.

Attainment area means any area of the country designated or redesignated by the EPA at 40 CFR part 81 in accordance with section 107(d) as having attained the relevant NAAQS for a given criteria pollutant. An area can be an attainment area for some pollutants and a nonattainment area for other pollutants.

Attainment demonstration means the requirement in section 182(b)(1)(A) of the Act to demonstrate that the specific annual emissions reductions included in a SIP are sufficient to attain the primary NAAQS by the date applicable to the area.

Directionally-sound strategies are strategies for which adequate procedures to quantify emissions reductions or specify a program baseline are not defined as part of the EIP.

Discretionary economic incentive program means any EIP submitted to the EPA as an implementation plan revision for purposes other than to comply with the statutory requirements of sections 182(g)(3), 182(g)(5), 187(d)(3), or 187(g) of the Act.

Economic incentive program (EIP) means a program which may include State established emission fees or a system of marketable permits, or a system of State fees on sale or manufacture of products the use of which contributes to O_3 formation, or any combination of the foregoing or other similar measures, as well as incentives and requirements to reduce vehicle emissions and vehicle miles traveled in the area, including any of the transportation control measures identified in section 108(f). Such programs may be directed toward stationary, area, and/or mobile sources, to achieve emissions reductions milestones, to attain and maintain ambient air quality standards, and/or to provide more flexible, lower-cost approaches to meeting environmental goals. Such programs are categorized into the following three categories: Emission-limiting, market-response, and directionally-sound strategies.

Emission-limiting strategies are strategies that directly specify limits on total mass emissions, emission-related parameters (e.g., emission rates per unit of production, product content limits), or levels of emissions reductions relative to a program baseline that are required to be met by affected sources, while providing flexibility to sources to reduce the cost of meeting program requirements.

Indian governing body means the governing body of any tribe, band, or group of Indians subject to the jurisdiction of the U.S. and recognized by the U.S. as possessing power of self-government.

Maintenance plan means an implementation plan for an area for which the State is currently seeking designation or has previously sought redesignation to attainment, under section 107(d) of the Act, which provides for the continued attainment of the NAAQS.

Market-response strategies are strategies that create one or more incentives for affected sources to reduce emissions, without directly specifying limits on emissions or emission-related parameters that individual sources or even all sources in the aggregate are required to meet.

Milestones means the reductions in emissions required to be achieved pursuant to section 182(b)(1) and the corresponding requirements in section 182(c)(2) (B) and (C), 182(d), and 182(e) of the Act for O_3 nonattainment areas, as well as the reduction in emissions of CO equivalent to the total of the specified annual emissions reductions required by December 31, 1995, pursuant to section 187(d)(1).

Mobile sources means on-road (highway) vehicles (e.g., automobiles, trucks and motorcycles) and nonroad vehicles (e.g., trains, airplanes, agricultural equipment, industrial equipment, construction vehicles, off-road motorcycles, and marine vessels).

National ambient air quality standard (NAAQS) means a standard set by the EPA at 40 CFR part 50 under section 109 of the Act.

Nonattainment area means any area of the country designated by the EPA at

40 CFR part 81 in accordance with section 107(d) of the Act as nonattainment for one or more criteria pollutants. An area could be a nonattainment area for some pollutants and an attainment area for other pollutants.

Nondiscriminatory means that a program in one State does not result in discriminatory effects on other States or sources outside the State with regard to interstate commerce.

Program baseline means the level of emissions, or emission-related parameter(s), for each affected source or group of affected sources, from which program results (e.g., quantifiable emissions reductions) shall be determined.

Program uncertainty factor means a factor applied to discount the amount of emissions reductions credited in an implementation plan demonstration to account for any strategy-specific uncertainties in an EIP.

Reasonable further progress (RFP) plan means any incremental emissions reductions required by the CAA (e.g., section 182(b)) and approved by the EPA as meeting these requirements.

Replicable refers to methods which are sufficiently unambiguous such that the same or equivalent results would be obtained by the application of the methods by different users.

RFP baseline means the total of actual volatile organic compounds or nitrogen oxides emissions from all anthropogenic sources in an O_3 nonattainment area during the calendar year 1990 (net of growth and adjusted pursuant to section 182(b)(1)(B) of the Act), expressed as typical O_3 season, weekday emissions.

Rule compliance factor means a factor applied to discount the amount of emissions reductions credited in an implementation plan demonstration to account for less-than-complete compliance by the affected sources in an EIP.

Shortfall means the difference between the amount of emissions reductions credited in an implementation plan for a particular EIP and those that are actually achieved by that EIP, as determined through an approved reconciliation process.

State means State, local government, or Indian-governing body.

State implementation plan (SIP) means a plan developed by an authorized governing body, including States, local governments, and Indian-governing bodies, in a nonattainment area, as required under titles I & II of the Clean Air Act, and approved by the EPA as meeting these same requirements.

Stationary source means any building, structure, facility or installation, other than an area or mobile source, which emits or may emit any criteria air pollutant or precursor subject to regulation under the Act.

Statutory economic incentive program means any EIP submitted to the EPA as an implementation plan revision to comply with sections 182(g)(3), 182(g)(5), 187(d)(3), or 187(g) of the Act.

Surplus means, at a minimum, emissions reductions in excess of an established program baseline which are not required by SIP requirements or State regulations, relied upon in any applicable attainment plan or demonstration, or credited in any RFP or milestone demonstration, so as to prevent the double-counting of emissions reductions.

Transportation control measure (TCM) is any measure of the types listed in section 108(F) of the Act, or any measure in an applicable implementation plan directed toward reducing emissions of air pollutants from transportation sources by a reduction in vehicle use or changes in traffic conditions.

§ 51.492 State program election and submittal.

(a) *Extreme O_3 nonattainment areas.* (1) A State or authorized governing body for any extreme O_3 nonattainment area shall submit a plan revision to implement an EIP, in accordance with the requirements of this part, pursuant to section 182(g)(5) of the Act, if:

(i) A required milestone compliance demonstration is not submitted within the required period.

(ii) The Administrator determines that the area has not met any applicable milestone.

(2) The plan revision in paragraph (a)(1) of this section shall be submitted within 9 months after such failure or determination, and shall be sufficient, in combination with other elements of the SIP, to achieve the next milestone.

(b) *Serious CO nonattainment areas.* (1) A State or authorized governing body for any serious CO nonattainment area shall submit a plan revision to implement an EIP, in accordance with the requirements of this part, if:

(i) A milestone demonstration is not submitted within the required period, pursuant to section 187(d) of the Act.

(ii) The Administrator notifies the State, pursuant to section 187(d) of the Act, that a milestone has not been met.

(iii) The Administrator determines, pursuant to section 186(b)(2) of the Act that the NAAQS for CO has not been attained by the applicable date for that area. Such revision shall be submitted within 9 months after such failure or determination.

(2) Submittals made pursuant to paragraphs (b)(1) (i) and (ii) of this section shall be sufficient, together with a transportation control program, to achieve the specific annual reductions in CO emissions set forth in the implementation plan by the attainment date. Submittals made pursuant to paragraph (b)(1)(iii) of this section shall be adequate, in combination with other elements of the revised plan, to reduce the total tonnage of emissions of CO in the area by at least 5 percent per year in each year after approval of the plan revision and before attainment of the NAAQS for CO.

(c) *Serious and severe O_3 nonattainment areas.* If a State, for any serious or severe O_3 nonattainment area, elects to implement an EIP in the circumstances set out in section 182(g)(3) of the Act, the State shall submit a plan revision to implement the program in accordance with the requirements of this part. If the option to implement an EIP is elected, a plan revision shall be submitted within 12 months after the date required for election, and shall be sufficient, in combination with other elements of the SIP, to achieve the next milestone.

(d) *Any nonattainment or attainment area.* Any State may at any time submit a plan or plan revision to implement a discretionary EIP, in accordance with the requirements of this part, pursuant to sections 110(a)(2)(A) and 172(c)(6) and other applicable provisions of the Act concerning SIP submittals. The plan revision shall not interfere with any applicable requirement concerning attainment and RFP, or any other applicable requirements of the Act.

§ 51.493 State program requirements.

Economic incentive programs shall be State and federally enforceable, nondiscriminatory, and consistent with the timely attainment of NAAQS, all applicable RFP and visibility requirements, applicable PSD increments, and all other applicable requirements of the Act. Programs in nonattainment areas for which credit is taken in attainment and RFP demonstrations shall be designed to ensure that the effects of the program are quantifiable and permanent over the entire duration of the program, and that the credit taken is limited to that which is surplus. Statutory programs shall be designed to result in quantifiable, significant reductions in actual emissions. The EIP's shall include the following elements, as applicable:

(a) *Statement of goals and rationale.* This element shall include a clear statement as to the environmental problem being addressed, the intended environmental and economic goals of the program, and the rationale relating the incentive-based strategy to the program goals.

(1) The statement of goals must include the goal that the program will benefit both the environment and the regulated entities. The program shall be designed so as to meaningfully meet this goal either directly, through increased or more rapid emissions reductions beyond those that would be achieved through a traditional regulatory program, or, alternatively, through other approaches that will result in real environmental benefits. Such alternative approaches include, but are not limited to, improved administrative mechanisms, reduced administrative burdens on regulatory agencies, improved emissions inventories, and the adoption of emission caps which over time constrain or reduce growth-related emissions beyond traditional regulatory approaches.

(2) The incentive-based strategy shall be described in terms of one of the following three strategies:

(i) Emission-limiting strategies, which directly specify limits on total mass emissions, emission-related parameters (e.g., emission rates per unit of production, product content limits), or levels of emissions reductions relative to a program baseline that affected sources are required to meet, while providing flexibility to sources to reduce the cost of meeting program requirements.

(ii) Market-response strategies, which create one or more incentives for affected sources to reduce emissions, without directly specifying limits on emissions or emission-related parameters that individual sources or even all sources in the aggregate are required to meet.

(iii) Directionally-sound strategies, for which adequate procedures to quantify emissions reductions are not defined.

(b) *Program scope.* (1) This element shall contain a clear definition of the sources affected by the program. This definition shall address:

(i) The extent to which the program is mandatory or voluntary for the affected sources.

(ii) Provisions, if any, by which sources that are not required to be in the program may voluntarily enter the program.

(iii) Provisions, if any, by which sources covered by the program may voluntarily leave the program.

(2) Any opt-in or opt-out provisions in paragraph (b)(1) of this section shall be designed to provide mechanisms by which such program changes are reflected in an area's attainment and RFP demonstrations, thus ensuring that there will not be an increase in the emissions inventory for the area caused by voluntary entry or exit from the program.

(3) The program scope shall be defined so as not to interfere with any other Federal requirements which apply to the affected sources.

(c) *Program baseline.* A program baseline shall be defined as a basis for projecting program results and, if applicable, for initializing the incentive mechanism (e.g., for marketable permits programs). The program baseline shall be consistent with, and adequately reflected in, the assumptions and inputs used to develop an area's RFP plans and attainment and maintenance demonstrations, as applicable. The State shall provide sufficient supporting information from the areawide emissions inventory and other sources to justify the baseline used in the EIP.

(1) For EIP's submitted in conjunction with, or subsequent to, the submission of any areawide progress plan due at the time of EIP submission (e.g., the 15 percent RFP plan and/or subsequent 3 percent plans) or an attainment demonstration, a State may exercise flexibility in setting a program baseline provided the program baseline is consistent with and reflected in all relevant progress plans or attainment demonstration. A flexible program baseline may be based on the lower of actual, allowable, or some other intermediate or lower level of emissions. For any EIP submitted prior to the submittal of an attainment demonstration, the State shall include the following with its EIP submittal:

(i) A commitment that its subsequent attainment demonstration and all future progress plans, if applicable, will be consistent with the EIP baseline.

(ii) A discussion of how the baseline will be integrated into the subsequent attainment demonstration, taking into account the potential that credit issued prior to the attainment demonstration may no longer be surplus relative to the attainment demonstration.

(2) Except as provided for in paragraph (c)(4) of this section, for EIP's submitted during a time period when any progress plans are required but not yet submitted (e.g., the 15 percent RFP plan and/or the subsequent 3 percent plans), the program baseline shall be based on the lower-of-actual-or-allowable emissions. In such cases, actual emissions shall be taken from the most appropriate inventory, such as the 1990 actual emission inventory (due for submission in November 1992), and allowable emissions are the lower of SIP-allowable emissions or the level of emissions consistent with source compliance with all Federal requirements related to attainment and maintenance of the NAAQS.

(3) For EIP's that are designed to implement new and/or previously existing RACT requirements through emissions trading and are submitted in conjunction with, or subsequent to, the submission of an associated RACT rule, a State may exercise flexibility in setting a program baseline provided the program baseline is consistent with and reflected in the associated RACT rule, and any applicable progress plans and attainment demonstrations.

(4) For EIP's that are designed to implement new and/or previously existing RACT requirements through emissions trading and are submitted prior to the submission of a required RFP plan or attainment demonstration, States also have flexibility in determining the program baseline, provided the following conditions are met.

(i) For EIP's that implement new RACT requirements for previously unregulated source categories through emissions trading, the new RACT requirements must reflect, to the extent practicable, increased emissions reductions beyond those that would be achieved through a traditional RACT program.

(ii) For EIP's that impose new RACT requirements on previously unregulated sources in a previously regulated source category (e.g., RACT ''catch-up'' programs), the new incentive-based RACT rule shall, in the aggregate, yield reductions in actual emissions at least equivalent to that which would result from source-by-source compliance with the existing RACT limit for that source category.

(5) A program baseline for individual sources shall, as appropriate, be contained or incorporated by reference in federally-enforceable operating permits or a federally-enforceable SIP.

(6) An initial baseline for TCM's shall be calculated by establishing the pre-existing conditions in the areas of interest. This may include establishing to what extent TCM's have already been implemented, what average vehicle occupancy (AVO) levels have been achieved during peak and off-peak periods, what types of trips occur in the region, and what mode choices have been made in making these trips. In addition, the extent to which travel options are currently available within the region of interest shall be determined. These travel options may include, but are not limited to, the degree of dispersion of transit services, the current ridership rates, and the availability and usage of parking facilities.

(7) Information used in setting a program baseline shall be of sufficient quality to provide for at least as high a degree of accountability as currently exists for traditional control requirements for the categories of sources affected by the program.

(d) *Replicable emission quantification methods.* This program element, for programs other than those which are categorized as directionally-sound, shall include credible, workable, and replicable methods for projecting program results from affected sources and, where necessary, for quantifying emissions from individual sources subject to the EIP. Such methods, if used to determine credit taken in attainment, RFP, and maintenance demonstrations, as applicable, shall yield results which can be shown to have a level of certainty comparable to that for source-specific standards and traditional methods of control strategy development. Such methods include, as applicable, the following elements:

(1) Specification of quantification methods. This element shall specify the approach or the combination or range of approaches that are acceptable for each source category affected by the program. Acceptable approaches may include, but are not limited to:

(i) Test methods for the direct measurement of emissions, either continuously or periodically.

(ii) Calculation equations which are a function of process or control system parameters, ambient conditions, activity levels, and/or throughput or production rates.

(iii) Mass balance calculations which are a function of inventory, usage, and/or disposal records.

(iv) EPA-approved emission factors, where appropriate and adequate.

(v) Any combination of these approaches.

(2) Specification of averaging times.

(i) The averaging time for any specified mass emissions caps or emission rate limits shall be consistent with: attaining and maintaining all applicable

NAAQS, meeting RFP requirements, and ensuring equivalency with all applicable RACT requirements.

(ii) If the averaging time for any specified VOC or NO_X mass emissions caps or emission rate limits for stationary sources (and for other sources, as appropriate) is longer than 24 hours, the State shall provide, in support of the SIP submittal, a statistical showing that the specified averaging time is consistent with attaining the O_3 NAAQS and satisfying RFP requirements, as applicable, on the basis of typical summer day emissions; and, if applicable, a statistical showing that the longer averaging time will produce emissions reductions that are equivalent on a daily basis to source-specific RACT requirements.

(3) Accounting for shutdowns and production curtailments. This accounting shall include provisions which ensure that:

(i) Emissions reductions associated with shutdowns and production curtailments are not double-counted in attainment or RFP demonstrations.

(ii) Any resultant ''shifting demand'' which increases emissions from other sources is accounted for in such demonstrations.

(4) Accounting for batch, seasonal, and cyclical operations. This accounting shall include provisions which ensure that the approaches used to account for such variable operations are consistent with attainment and RFP plans.

(5) Accounting for travel mode choice options, as appropriate, for TCM's. This accounting shall consider the factors or attributes of the different forms of travel modes (e.g., bus, ridesharing) which determine which type of travel an individual will choose. Such factors include, but are not limited to, time, cost, reliability, and convenience of the mode.

(e) *Source requirements.* This program element shall include all source-specific requirements that constitute compliance with the program. Such requirements shall be appropriate, readily ascertainable, and State and federally enforceable, including, as applicable:

(1) Emission limits.

(i) For programs that impose limits on total mass emissions, emission rates, or other emission-related parameter(s), there must be an appropriate tracking system so that a facility's limits are readily ascertainable at all times.

(ii) For emission-limiting EIP's that authorize RACT sources to meet their RACT requirements through RACT/non-RACT trading, such trading shall result in an exceptional environmental benefit. Demonstration of an exceptional environmental benefit shall require either the use of the statutory offset ratios for nonattainment areas as the determinant of the amount of emissions reductions that would be required from non-RACT sources generating credits for RACT sources or, alternatively, a trading ratio of 1.1 to 1, at a minimum, may be authorized, provided exceptional environmental benefits are otherwise demonstrated.

(2) Monitoring, recordkeeping, and reporting requirements.

(i) An EIP (or the SIP as a whole) must contain test methods and, where necessary, emission quantification methodologies, appropriate to the emission limits established in the SIP. EIP sources must be subject to clearly specified MRR requirements appropriate to the test methods and any applicable quantification methodologies, and consistent with the EPA's title V rules, where applicable. Such MRR requirements shall provide sufficiently reliable and timely information to determine compliance with emission limits and other applicable strategy-specific requirements, and to provide for State and Federal enforceability of such limits and requirements. Methods for MRR may include, but are not limited to:

(A) The continuous monitoring of mass emissions, emission rates, or process or control parameters.

(B) In situ or portable measurement devices to verify control system operating conditions.

(C) Periodic measurement of mass emissions or emission rates using reference test methods.

(D) Operation and maintenance procedures and/or other work practices designed to prevent, identify, or remedy noncomplying conditions.

(E) Manual or automated recordkeeping of material usage, inventories, throughput, production, or levels of required activities.

(F) Any combination of these methods. EIP's shall require that responsible parties at each facility in the EIP program certify reported information.

(ii) Procedures for determining required data, including the emissions contribution from affected sources, for periods for which required data monitoring is not performed, data are otherwise missing, or data have been demonstrated to have been inaccurately determined.

(3) Any other applicable strategy-specific requirements.

(f) *Projected results and audit/reconciliation procedures.* (1) The SIP submittal shall include projections of the emissions reductions associated with the implementation of the program. These projected results shall be related to and consistent with the assumptions used to develop the area's attainment demonstration and maintenance plan, as applicable. For programs designed to produce emissions reductions creditable towards RFP milestones, projected emissions reductions shall be related to the RFP baseline and consistent with the area's RFP compliance demonstration. The State shall provide sufficient supporting information that shows how affected sources are or will be addressed in the emissions inventory, RFP plan, and attainment demonstration or maintenance plan, as applicable.

(i) For emission-limiting programs, the projected results shall be consistent with the reductions in mass emissions or emissions-related parameters specified in the program design.

(ii) For market-response programs, the projected results shall be based on market analyses relating levels of targeted emissions and/or emission-related activities to program design parameters.

(iii) For directionally-sound programs, the projected results may be descriptive and shall be consistent with the area's attainment demonstration or maintenance plan.

(2) Quantitative projected results shall be adjusted through the use of two uncertainty factors, as appropriate, to reflect uncertainties inherent in both the extent to which sources will comply with program requirements and the overall program design.

(i) Uncertainty resulting from incomplete compliance shall be addressed through the use of a rule compliance factor.

(ii) Programmatic uncertainty shall be addressed through the use of a program uncertainty factor. Any presumptive norms set by the EPA shall be used unless an adequate justification for an alternative factor is included in supporting information to be supplied with the SIP submittal. In the absence of any EPA-specified presumptive norms, the State shall provide an adequate justification for the selected factors as part of the supporting information to be supplied with the SIP submittal.

(3) Unless otherwise provided in program-specific guidance issued by the EPA, EIP's for which SIP credit is taken shall include audit procedures to evaluate program implementation and track program results in terms of both actual emissions reductions, and, to the extent practicable, cost savings relative to traditional regulatory program requirements realized during program implementation. Such audits shall be conducted at specified time intervals, not to exceed three years. The State shall provide timely post-audit reports to the EPA.

(i) For emission-limiting EIP's, the State shall commit to ensure the timely implementation of programmatic revisions or other measures which the State, in response to the audit, deems necessary for the successful operation of the program in the context of overall RFP and attainment requirements.

(ii) For market-response EIP's, reconciliation procedures that identify a range of appropriate actions or revisions to program requirements that will make up for any shortfall between credited results (i.e., projected results, as adjusted by the two uncertainty factors described above) and actual results obtained during program implementation shall be submitted together with the program audit provisions. Such measures must be federally enforceable, as appropriate, and automatically executing to the extent necessary to

make up the shortfall within a specified period of time, consistent with relevant RFP and attainment requirements.

(g) *Implementation schedule.* The program shall contain a schedule for the adoption and implementation of all State commitments and source requirements included in the program design.

(h) *Administrative procedures.* The program shall contain a description of State commitments which are integral to the implementation of the program, and the administrative system to be used to implement the program, addressing the adequacy of the personnel, funding, and legislative authority.

(1) States shall furnish adequate documentation of existing legal authority and demonstrated administrative capacity to implement and enforce the provisions of the EIP.

(2) For programs which require private and/or public entities to establish emission-related economic incentives (e.g., programs requiring employers to exempt carpoolers/multiple occupancy vehicles from paying for parking), States shall furnish adequate documentation of State authority and administrative capacity to implement and enforce the underlying program.

(i) *Enforcement mechanisms.* The program shall contain a compliance instrument(s) for all program requirements, which is legally binding and State and federally enforceable. This program element shall also include a State enforcement program which defines violations, and specifies auditing and inspections plans and provisions for enforcement actions. The program shall contain effective penalties for noncompliance which preserve the level of deterrence in traditional programs. For all such programs, the manner of collection of penalties must be specified.

(1) Emission limit violations. (i) Programs imposing limits on mass emissions or emission rates that provide for extended averaging times and/or compliance on a multisource basis shall include procedures for determining the number of violations, the number of days of violation, and sources in violation, for statutory maximum penalty purposes, when the limits are exceeded. The State shall demonstrate that such procedures shall not lessen the incentive for source compliance as compared to a program applied on a source-by-source, daily basis.

(ii) Programs shall require plans for remedying noncompliance at any facility that exceeds a multisource emissions limit for a given averaging period. These plans shall be enforceable both federally and by the State.

(2) Violations of MRR requirements. The MRR requirements shall apply on a daily basis, as appropriate, and violations thereof shall be subject to State enforcement sanctions and to the Federal penalty of up to $25,000 for each day a violation occurs or continues. In addition, where the requisite scienter conditions are met, violations of such requirements shall be subject to the Act's criminal penalty sanctions of section 113(c)(2), which provides for fines and imprisonment of up to 2 years.

§ 51.494 Use of program revenues.

Any revenues generated from statutory EIP's shall be used by the State for any of the following:

(a) Providing incentives for achieving emissions reductions.

(b) Providing assistance for the development of innovative technologies for the control of O_3 air pollution and for the development of lower-polluting solvents and surface coatings. Such assistance shall not provide for the payment of more than 75 percent of either the costs of any project to develop such a technology or the costs of development of a lower-polluting solvent or surface coating.

(c) Funding the administrative costs of State programs under this Act. Not more than 50 percent of such revenues may be used for this purpose. The use of any revenues generated from discretionary EIP's shall not be constrained by the provisions of this part.

Subpart W—Determining Conformity of General Federal Actions to State or Federal Implementation Plans

SOURCE: 58 FR 63247, Nov. 30, 1993, unless otherwise noted.

§ 51.850 Prohibition.

(a) No department, agency or instrumentality of the Federal Government shall engage in, support in any way or provide financial assistance for, license or permit, or approve any activity which does not conform to an applicable implementation plan.

(b) A Federal agency must make a determination that a Federal action conforms to the applicable implementation plan in accordance with the requirements of this subpart before the action is taken.

(c) Paragraph (b) of this section does not include Federal actions where either:

(1) A National Environmental Policy Act (NEPA) analysis was completed as evidenced by a final environmental assessment (EA), environmental impact statement (EIS), or finding of no significant impact (FONSI) that was prepared prior to January 31, 1994;

(2)(i) Prior to January 31, 1994, an EA was commenced or a contract was awarded to develop the specific environmental analysis;

(ii) Sufficient environmental analysis is completed by March 15, 1994 so that the Federal agency may determine that the Federal action is in conformity with the specific requirements and the purposes of the applicable SIP pursuant to the agency's affirmative obligation under section 176(c) of the Clean Air Act (Act); and

(iii) A written determination of conformity under section 176(c) of the Act has been made by the Federal agency responsible for the Federal action by March 15, 1994.

(d) Notwithstanding any provision of this subpart, a determination that an action is in conformance with the applicable implementation plan does not exempt the action from any other requirements of the applicable implementation plan, the NEPA, or the Act.

§ 51.851 State Implementation Plan (SIP) revision.

(a) Each State must submit to the Environmental Protection Agency (EPA) a revision to its applicable implementation plan which contains criteria and procedures for assessing the conformity of Federal actions to the applicable implementation plan, consistent with this subpart. The State must submit the conformity provisions within 12 months after November 30, 1993 or within 12 months of an area's designation to nonattainment, whichever date is later.

(b) The Federal conformity rules under this subpart and 40 CFR part 93, in addition to any existing applicable State requirements, establish the conformity criteria and procedures necessary to meet the Act requirements until such time as the required conformity SIP revision is approved by EPA. A State's conformity provisions must contain criteria and procedures that are no less stringent than the requirements described in this subpart. A State may establish more stringent conformity criteria and procedures only if they apply equally to non-Federal as well as Federal entities. Following EPA approval of the State conformity provisions (or a portion thereof) in a revision to the applicable SIP, the approved (or approved portion of the) State criteria and procedures would govern conformity determinations and the Federal conformity regulations contained in 40 CFR part 93 would apply only for the portion, if any, of the State's conformity provisions that is not approved by EPA. In addition, any previously applicable SIP requirements relating to conformity remain enforceable until the State revises its SIP to specifically remove them from the SIP and that revision is approved by EPA.

§ 51.852 Definitions.

Terms used but not defined in this part shall have the meaning given them by the Act and EPA's regulations, (40 CFR chapter I), in that order of priority.

Affected Federal land manager means the Federal agency or the Federal official charged with direct responsibility for management of an area designated as Class I under the Act (42 U.S.C. 7472) that is located within 100 km of the proposed Federal action.

Applicable implementation plan or applicable SIP means the portion (or portions) of the SIP or most recent revision thereof, which has been approved under section 110 of the Act, or promulgated under section 110(c) of the Act

(Federal implementation plan), or promulgated or approved pursuant to regulations promulgated under section 301(d) of the Act and which implements the relevant requirements of the Act.

Areawide air quality modeling analysis means an assessment on a scale that includes the entire nonattainment or maintenance area which uses an air quality dispersion model to determine the effects of emissions on air quality.

Cause or contribute to a new violation means a Federal action that:

(1) Causes a new violation of a national ambient air quality standard (NAAQS) at a location in a nonattainment or maintenance area which would otherwise not be in violation of the standard during the future period in question if the Federal action were not taken; or

(2) Contributes, in conjunction with other reasonably foreseeable actions, to a new violation of a NAAQS at a location in a nonattainment or maintenance area in a manner that would increase the frequency or severity of the new violation.

Caused by, as used in the terms ''direct emissions'' and ''indirect emissions,'' means emissions that would not otherwise occur in the absence of the Federal action.

Criteria pollutant or standard means any pollutant for which there is established a NAAQS at 40 CFR part 50.

Direct emissions means those emissions of a criteria pollutant or its precursors that are caused or initiated by the Federal action and occur at the same time and place as the action.

Emergency means a situation where extremely quick action on the part of the Federal agencies involved is needed and where the timing of such Federal activities makes it impractical to meet the requirements of this subpart, such as natural disasters like hurricanes or earthquakes, civil disturbances such as terrorist acts, and military mobilizations.

Emissions budgets are those portions of the applicable SIP's projected emissions inventories that describe the levels of emissions (mobile, stationary, area, etc.) that provide for meeting reasonable further progress milestones, attainment, and/or maintenance for any criteria pollutant or its precursors.

Emissions offsets, for purposes of §51.858, are emissions reductions which are quantifiable, consistent with the applicable SIP attainment and reasonable further progress demonstrations, surplus to reductions required by, and credited to, other applicable SIP provisions, enforceable at both the State and Federal levels, and permanent within the timeframe specified by the program.

Emissions that a Federal agency has a continuing program responsibility for means emissions that are specifically caused by an agency carrying out its authorities, and does not include emissions that occur due to subsequent activities, unless such activities are required by the Federal agency. Where an agency, in performing its normal program responsibilities, takes actions itself or imposes conditions that result in air pollutant emissions by a non-Federal entity taking subsequent actions, such emissions are covered by the meaning of a continuing program responsibility.

EPA means the Environmental Protection Agency.

Federal action means any activity engaged in by a department, agency, or instrumentality of the Federal Government, or any activity that a department, agency or instrumentality of the Federal Government supports in any way, provides financial assistance for, licenses, permits, or approves, other than activities related to transportation plans, programs, and projects developed, funded, or approved under title 23 U.S.C. or the Federal Transit Act (49 U.S.C. 1601 *et seq.*). Where the Federal action is a permit, license, or other approval for some aspect of a non-Federal undertaking, the relevant activity is the part, portion, or phase or the non-Federal undertaking that requires the Federal permit, license, or approval.

Federal agency means, for purposes of this subpart, a Federal department, agency, or instrumentality of the Federal Government.

Increase the frequency or severity of any existing violation of any standard in any area means to cause a nonattainment area to exceed a standard more

often or to cause a violation at a greater concentration than previously existed and/or would otherwise exist during the future period in question, if the project were not implemented.

Indirect emissions means those emissions of a criteria pollutant or its precursors that:

(1) Are caused by the Federal action, but may occur later in time and/or may be farther removed in distance from the action itself but are still reasonably foreseeable; and

(2) The Federal agency can practicably control and will maintain control over due to a continuing program responsibility of the Federal agency.

Local air quality modeling analysis means an assessment of localized impacts on a scale smaller than the entire nonattainment or maintenance area, including, for example, congested roadway intersections and highways or transit terminals, which uses an air quality dispersion model to determine the effects of emissions on air quality.

Maintenance area means an area with a maintenance plan approved under section 175A of the Act.

Maintenance plan means a revision to the applicable SIP, meeting the requirements of section 175A of the Act.

Metropolitan Planning Organization (MPO) is that organization designated as being responsible, together with the State, for conducting the continuing, cooperative, and comprehensive planning process under 23 U.S.C. 134 and 49 U.S.C. 1607.

Milestone has the meaning given in sections 182(g)(1) and 189(c)(1) of the Act.

National ambient air quality standards (NAAQS) are those standards established pursuant to section 109 of the Act and include standards for carbon monoxide (CO), lead (Pb), nitrogen dioxide (NO_2), ozone, particulate matter (PM–10), and sulfur dioxide (SO_2).

NEPA is the National Environmental Policy Act of 1969, as amended (42 U.S.C. 4321 *et seq.*).

Nonattainment Area (NAA) means an area designated as nonattainment under section 107 of the Act and described in 40 CFR part 81.

Precursors of a criteria pollutant are:

(1) For ozone, nitrogen oxides (NO_X), unless an area is exempted from NO_X requirements under section 182(f) of the Act, and volatile organic compounds (VOC); and

(2) For PM–10, those pollutants described in the PM–10 nonattainment area applicable SIP as significant contributors to the PM–10 levels.

Reasonably foreseeable emissions are projected future indirect emissions that are identified at the time the conformity determination is made; the location of such emissions is known and the emissions are quantifiable, as described and documented by the Federal agency based on its own information and after reviewing any information presented to the Federal agency.

Regional water and/or wastewater projects include construction, operation, and maintenance of water or wastewater conveyances, water or wastewater treatment facilities, and water storage reservoirs which affect a large portion of a nonattainment or maintenance area.

Regionally significant action means a Federal action for which the direct and indirect emissions of any pollutant represent 10 percent or more of a nonattainment or maintenance area's emissions inventory for that pollutant.

Total of direct and indirect emissions means the sum of direct and indirect emissions increases and decreases caused by the Federal action; i.e., the ''net'' emissions considering all direct and indirect emissions. The portion of emissions which are exempt or presumed to conform under § 51.853, (c), (d), (e), or (f) are not included in the ''total of direct and indirect emissions.'' The ''total of direct and indirect emissions'' includes emissions of criteria pollutants and emissions of precursors of criteria pollutants.

§ 51.853 Applicability.

(a) Conformity determinations for Federal actions related to transportation plans, programs, and projects developed, funded, or approved under title 23 U.S.C. or the Federal Transit Act (49 U.S.C. 1601 *et seq.*) must meet the procedures and criteria of 40 CFR part 51, subpart T, in lieu of the procedures set forth in this subpart.

(b) For Federal actions not covered by paragraph (a) of this section, a conformity determination is required for

each pollutant where the total of direct and indirect emissions in a nonattainment or maintenance area caused by a Federal action would equal or exceed any of the rates in paragraphs (b)(1) or (2) of this section.

(1) For purposes of paragraph (b) of this section, the following rates apply in nonattainment areas (NAAs):

	Tons/year
Ozone (VOC's or NO_X):	
Serious NAA's	50
Severe NAA's	25
Extreme NAA's	10
Other ozone NAA's outside an ozone transport region	100
Marginal and moderate NAA's inside an ozone transport region:	
VOC	50
NO_X	100
Carbon monoxide: All NAA's	100
SO_2 or NO_2: All NAA's	100
PM–10:	
Moderate NAA's	100
Serious NAA's	70
Pb: All NAA's	25

(2) For purposes of paragraph (b) of this section, the following rates apply in maintenance areas:

	Tons/year
Ozone (NO_X), SO_2 or NO_2: All maintenance areas	100
Ozone (VOC's):	
Maintenance areas inside an ozone transport region	50
Maintenance areas outside an ozone transport region	100
Carbon monoxide: All maintenance areas	100
PM–10: All maintenance areas	100
Pb: All maintenance areas	25

(c) The requirements of this subpart shall not apply to:

(1) Actions where the total of direct and indirect emissions are below the emissions levels specified in paragraph (b) of this section.

(2) The following actions which would result in no emissions increase or an increase in emissions that is clearly de minimis:

(i) Judicial and legislative proceedings.

(ii) Continuing and recurring activities such as permit renewals where activities conducted will be similar in scope and operation to activities currently being conducted.

(iii) Rulemaking and policy development and issuance.

(iv) Routine maintenance and repair activities, including repair and maintenance of administrative sites, roads, trails, and facilities.

(v) Civil and criminal enforcement activities, such as investigations, audits, inspections, examinations, prosecutions, and the training of law enforcement personnel.

(vi) Administrative actions such as personnel actions, organizational changes, debt management or collection, cash management, internal agency audits, program budget proposals, and matters relating to the administration and collection of taxes, duties and fees.

(vii) The routine, recurring transportation of materiel and personnel.

(viii) Routine movement of mobile assets, such as ships and aircraft, in home port reassignments and stations (when no new support facilities or personnel are required) to perform as operational groups and/or for repair or overhaul.

(ix) Maintenance dredging and debris disposal where no new depths are required, applicable permits are secured, and disposal will be at an approved disposal site.

(x) Actions, such as the following, with respect to existing structures, properties, facilities and lands where future activities conducted will be similar in scope and operation to activities currently being conducted at the existing structures, properties, facilities, and lands; for example, relocation of personnel, disposition of federally-owned existing structures, properties, facilities, and lands, rent subsidies, operation and maintenance cost subsidies, the exercise of receivership or conservatorship authority, assistance in purchasing structures, and the production of coins and currency.

(xi) The granting of leases, licenses such as for exports and trade, permits, and easements where activities conducted will be similar in scope and operation to activities currently being conducted.

(xii) Planning, studies, and provision of technical assistance.

(xiii) Routine operation of facilities, mobile assets and equipment.

(xiv) Transfers of ownership, interests, and titles in land, facilities, and

real and personal properties, regardless of the form or method of the transfer.

(xv) The designation of empowerment zones, enterprise communities, or viticultural areas.

(xvi) Actions by any of the Federal banking agencies or the Federal Reserve Banks, including actions regarding charters, applications, notices, licenses, the supervision or examination of depository institutions or depository institution holding companies, access to the discount window, or the provision of financial services to banking organizations or to any department, agency or instrumentality of the United States.

(xvii) Actions by the Board of Governors of the Federal Reserve System or any Federal Reserve Bank to effect monetary or exchange rate policy.

(xviii) Actions that implement a foreign affairs function of the United States.

(xix) Actions (or portions thereof) associated with transfers of land, facilities, title, and real properties through an enforceable contract or lease agreement where the delivery of the deed is required to occur promptly after a specific, reasonable condition is met, such as promptly after the land is certified as meeting the requirements of the Comprehensive Environmental Response, Compensation, and Liability Act (CERCLA), and where the Federal agency does not retain continuing authority to control emissions associated with the lands, facilities, title, or real properties.

(xx) Transfers of real property, including land, facilities, and related personal property from a Federal entity to another Federal entity and assignments of real property, including land, facilities, and related personal property from a Federal entity to another Federal entity for subsequent deeding to eligible applicants.

(xxi) Actions by the Department of the Treasury to effect fiscal policy and to exercise the borrowing authority of the United States.

(3) The following actions where the emissions are not reasonably foreseeable:

(i) Initial Outer Continental Shelf lease sales which are made on a broad scale and are followed by exploration and development plans on a project level.

(ii) Electric power marketing activities that involve the acquisition, sale and transmission of electric energy.

(4) Actions which implement a decision to conduct or carry out a conforming program such as prescribed burning actions which are consistent with a conforming land management plan.

(d) Notwithstanding the other requirements of this subpart, a conformity determination is not required for the following Federal actions (or portion thereof):

(1) The portion of an action that includes major new or modified stationary sources that require a permit under the new source review (NSR) program (section 173 of the Act) or the prevention of significant deterioration (PSD) program (title I, part C of the Act).

(2) Actions in response to emergencies or natural disasters such as hurricanes, earthquakes, etc., which are commenced on the order of hours or days after the emergency or disaster and, if applicable, which meet the requirements of paragraph (e) of this section.

(3) Research, investigations, studies, demonstrations, or training (other than those exempted under paragraph (c)(2) of this section), where no environmental detriment is incurred and/or, the particular action furthers air quality research, as determined by the State agency primarily responsible for the applicable SIP.

(4) Alteration and additions of existing structures as specifically required by new or existing applicable environmental legislation or environmental regulations (e.g., hush houses for aircraft engines and scrubbers for air emissions).

(5) Direct emissions from remedial and removal actions carried out under the Comprehensive Environmental Response, Compensation and Liability Act (CERCLA) and associated regulations to the extent such emissions either comply with the substantive requirements of the PSD/NSR permitting program or are exempted from other environmental regulation under the

provisions of CERCLA and applicable regulations issued under CERCLA.

(e) Federal actions which are part of a continuing response to an emergency or disaster under paragraph (d)(2) of this section and which are to be taken more than 6 months after the commencement of the response to the emergency or disaster under paragraph (d)(2) of this section are exempt from the requirements of this subpart only if:

(1) The Federal agency taking the actions makes a written determination that, for a specified period not to exceed an additional 6 months, it is impractical to prepare the conformity analyses which would otherwise be required and the actions cannot be delayed due to overriding concerns for public health and welfare, national security interests and foreign policy commitments; or

(2) For actions which are to be taken after those actions covered by paragraph (e)(1) of this section, the Federal agency makes a new determination as provided in paragraph (e)(1) of this section.

(f) Notwithstanding other requirements of this subpart, actions specified by individual Federal agencies that have met the criteria set forth in either paragraph (g)(1) or (g)(2) of this section and the procedures set forth in paragraph (h) of this section are presumed to conform, except as provided in paragraph (j) of this section.

(g) The Federal agency must meet the criteria for establishing activities that are presumed to conform by fulfilling the requirements set forth in either paragraph (g)(1) or (g)(2) of this section:

(1) The Federal agency must clearly demonstrate using methods consistent with this subpart that the total of direct and indirect emissions from the type of activities which would be presumed to conform would not:

(i) Cause or contribute to any new violation of any standard in any area;

(ii) Interfere with provisions in the applicable SIP for maintenance of any standard;

(iii) Increase the frequency or severity of any existing violation of any standard in any area; or

(iv) Delay timely attainment of any standard or any required interim emission reductions or other milestones in any area including, where applicable, emission levels specified in the applicable SIP for purposes of:

(A) A demonstration of reasonable further progress;

(B) A demonstration of attainment; or

(C) A maintenance plan; or

(2) The Federal agency must provide documentation that the total of direct and indirect emissions from such future actions would be below the emission rates for a conformity determination that are established in paragraph (b) of this section, based, for example, on similar actions taken over recent years.

(h) In addition to meeting the criteria for establishing exemptions set forth in paragraphs (g)(1) or (g)(2) of this section, the following procedures must also be complied with to presume that activities will conform:

(1) The Federal agency must identify through publication in the FEDERAL REGISTER its list of proposed activities that are presumed to conform and the basis for the presumptions;

(2) The Federal agency must notify the appropriate EPA Regional Office(s), State and local air quality agencies and, where applicable, the agency designated under section 174 of the Act and the MPO and provide at least 30 days for the public to comment on the list of proposed activities presumed to conform;

(3) The Federal agency must document its response to all the comments received and make the comments, response, and final list of activities available to the public upon request; and

(4) The Federal agency must publish the final list of such activities in the FEDERAL REGISTER.

(i) Notwithstanding the other requirements of this subpart, when the total of direct and indirect emissions of any pollutant from a Federal action does not equal or exceed the rates specified in paragraph (b) of this section, but represents 10 percent or more of a nonattainment or maintenance area's total emissions of that pollutant, the

action is defined as a regionally significant action and the requirements of § 51.850 and §§ 51.855 through 51.860 shall apply for the Federal action.

(j) Where an action otherwise presumed to conform under paragraph (f) of this section is a regionally significant action or does not in fact meet one of the criteria in paragraph (g)(1) of this section, that action shall not be presumed to conform and the requirements of § 51.850 and §§ 51.855 through 51.860 shall apply for the Federal action.

(k) The provisions of this subpart shall apply in all nonattainment and maintenance areas.

§ 51.854 Conformity analysis.

Any Federal department, agency, or instrumentality of the Federal Government taking an action subject to this subpart must make its own conformity determination consistent with the requirements of this subpart. In making its conformity determination, a Federal agency must consider comments from any interested parties. Where multiple Federal agencies have jurisdiction for various aspects of a project, a Federal agency may choose to adopt the analysis of another Federal agency or develop its own analysis in order to make its conformity determination.

§ 51.855 Reporting requirements.

(a) A Federal agency making a conformity determination under § 51.858 must provide to the appropriate EPA Regional Office(s), State and local air quality agencies and, where applicable, affected Federal land managers, the agency designated under section 174 of the Act and the MPO a 30 day notice which describes the proposed action and the Federal agency's draft conformity determination on the action.

(b) A Federal agency must notify the appropriate EPA Regional Office(s), State and local air quality agencies and, where applicable, affected Federal land managers, the agency designated under section 174 of the Clean Air Act and the MPO within 30 days after making a final conformity determination under § 51.858.

§ 51.856 Public participation.

(a) Upon request by any person regarding a specific Federal action, a Federal agency must make available for review its draft conformity determination under § 51.858 with supporting materials which describe the analytical methods and conclusions relied upon in making the applicability analysis and draft conformity determination.

(b) A Federal agency must make public its draft conformity determination under § 51.858 by placing a notice by prominent advertisement in a daily newspaper of general circulation in the area affected by the action and by providing 30 days for written public comment prior to taking any formal action on the draft determination. This comment period may be concurrent with any other public involvement, such as occurs in the NEPA process.

(c) A Federal agency must document its response to all the comments received on its draft conformity determination under § 51.858 and make the comments and responses available, upon request by any person regarding a specific Federal action, within 30 days of the final conformity determination.

(d) A Federal agency must make public its final conformity determination under § 51.858 for a Federal action by placing a notice by prominent advertisement in a daily newspaper of general circulation in the area affected by the action within 30 days of the final conformity determination.

§ 51.857 Frequency of conformity determinations.

(a) The conformity status of a Federal action automatically lapses 5 years from the date a final conformity determination is reported under § 51.855, unless the Federal action has been completed or a continuous program has been commenced to implement that Federal action within a reasonable time.

(b) Ongoing Federal activities at a given site showing continuous progress are not new actions and do not require periodic redeterminations so long as such activities are within the scope of the final conformity determination reported under § 51.855.

(c) If, after the conformity determination is made, the Federal action is changed so that there is an increase in the total of direct and indirect emissions above the levels in §51.853(b), a new conformity determination is required.

§51.858 Criteria for determining conformity of general Federal actions.

(a) An action required under §51.853 to have a conformity determination for a specific pollutant, will be determined to conform to the applicable SIP if, for each pollutant that exceeds the rates in §51.853(b), or otherwise requires a conformity determination due to the total of direct and indirect emissions from the action, the action meets the requirements of paragraph (c) of this section, and meets any of the following requirements:

(1) For any criteria pollutant, the total of direct and indirect emissions from the action are specifically identified and accounted for in the applicable SIP's attainment or maintenance demonstration;

(2) For ozone or nitrogen dioxide, the total of direct and indirect emissions from the action are fully offset within the same nonattainment or maintenance area through a revision to the applicable SIP or a similarly enforceable measure that effects emission reductions so that there is no net increase in emissions of that pollutant;

(3) For any criteria pollutant, except ozone and nitrogen dioxide, the total of direct and indirect emissions from the action meet the requirements:

(i) Specified in paragraph (b) of this section, based on areawide air quality modeling analysis and local air quality modeling analysis; or

(ii) Meet the requirements of paragraph (a)(5) of this section and, for local air quality modeling analysis, the requirement of paragraph (b) of this section;

(4) For CO or PM–10—

(i) Where the State agency primarily responsible for the applicable SIP determines that an areawide air quality modeling analysis is not needed, the total of direct and indirect emissions from the action meet the requirements specified in paragraph (b) of this section, based on local air quality modeling analysis; or

(ii) Where the State agency primarily responsible for the applicable SIP determines that an areawide air quality modeling analysis is appropriate and that a local air quality modeling analysis is not needed, the total of direct and indirect emissions from the action meet the requirements specified in paragraph (b) of this section, based on areawide modeling, or meet the requirements of paragraph (a)(5) of this section; or

(5) For ozone or nitrogen dioxide, and for purposes of paragraphs (a)(3)(ii) and (a)(4)(ii) of this section, each portion of the action or the action as a whole meets any of the following requirements:

(i) Where EPA has approved a revision to an area's attainment or maintenance demonstration after 1990 and the State makes a determination as provided in paragraph (a)(5)(i)(A) of this section or where the State makes a commitment as provided in paragraph (a)(5)(i)(B) of this section:

(A) The total of direct and indirect emissions from the action (or portion thereof) is determined and documented by the State agency primarily responsible for the applicable SIP to result in a level of emissions which, together with all other emissions in the nonattainment (or maintenance) area, would not exceed the emissions budgets specified in the applicable SIP;

(B) The total of direct and indirect emissions from the action (or portion thereof) is determined by the State agency responsible for the applicable SIP to result in a level of emissions which, together with all other emissions in the nonattainment (or maintenance) area, would exceed an emissions budget specified in the applicable SIP and the State Governor or the Governor's designee for SIP actions makes a written commitment to EPA which includes the following:

(*1*) A specific schedule for adoption and submittal of a revision to the SIP which would achieve the needed emission reductions prior to the time emissions from the Federal action would occur;

(*2*) Identification of specific measures for incorporation into the SIP which

would result in a level of emissions which, together with all other emissions in the nonattainment or maintenance area, would not exceed any emissions budget specified in the applicable SIP;

(*3*) A demonstration that all existing applicable SIP requirements are being implemented in the area for the pollutants affected by the Federal action, and that local authority to implement additional requirements has been fully pursued;

(*4*) A determination that the responsible Federal agencies have required all reasonable mitigation measures associated with their action; and

(*5*) Written documentation including all air quality analyses supporting the conformity determination;

(C) Where a Federal agency made a conformity determination based on a State commitment under paragraph (a)(5)(i)(B) of this section, such a State commitment is automatically deemed a call for a SIP revision by EPA under section 110(k)(5) of the Act, effective on the date of the Federal conformity determination and requiring response within 18 months or any shorter time within which the State commits to revise the applicable SIP;

(ii) The action (or portion thereof), as determined by the MPO, is specifically included in a current transportation plan and transportation improvement program which have been found to conform to the applicable SIP under 40 CFR part 51, subpart T, or 40 CFR part 93, subpart A;

(iii) The action (or portion thereof) fully offsets its emissions within the same nonattainment or maintenance area through a revision to the applicable SIP or an equally enforceable measure that effects emission reductions equal to or greater than the total of direct and indirect emissions from the action so that there is no net increase in emissions of that pollutant;

(iv) Where EPA has not approved a revision to the relevant SIP attainment or maintenance demonstration since 1990, the total of direct and indirect emissions from the action for the future years (described in § 51.859(d)) do not increase emissions with respect to the baseline emissions:

(A) The baseline emissions reflect the historical activity levels that occurred in the geographic area affected by the proposed Federal action during:

(*1*) Calendar year 1990;

(*2*) The calendar year that is the basis for the classification (or, where the classification is based on multiple years, the most representative year), if a classification is promulgated in 40 CFR part 81; or

(*3*) The year of the baseline inventory in the PM–10 applicable SIP;

(B) The baseline emissions are the total of direct and indirect emissions calculated for the future years (described in § 51.859(d)) using the historic activity levels (described in paragraph (a)(5)(iv)(A) of this section) and appropriate emission factors for the future years; or

(v) Where the action involves regional water and/or wastewater projects, such projects are sized to meet only the needs of population projections that are in the applicable SIP.

(b) The areawide and/or local air quality modeling analyses must:

(1) Meet the requirements in § 51.859; and

(2) Show that the action does not:

(i) Cause or contribute to any new violation of any standard in any area; or

(ii) Increase the frequency or severity of any existing violation of any standard in any area.

(c) Notwithstanding any other requirements of this section, an action subject to this subpart may not be determined to conform to the applicable SIP unless the total of direct and indirect emissions from the action is in compliance or consistent with all relevant requirements and milestones contained in the applicable SIP, such as elements identified as part of the reasonable further progress schedules, assumptions specified in the attainment or maintenance demonstration, prohibitions, numerical emission limits, and work practice requirements.

(d) Any analyses required under this section must be completed, and any mitigation requirements necessary for a finding of conformity must be identified before the determination of conformity is made.

§ 51.859 Procedures for conformity determinations of general Federal actions.

(a) The analyses required under this subpart must be based on the latest planning assumptions.

(1) All planning assumptions must be derived from the estimates of population, employment, travel, and congestion most recently approved by the MPO, or other agency authorized to make such estimates, where available.

(2) Any revisions to these estimates used as part of the conformity determination, including projected shifts in geographic location or level of population, employment, travel, and congestion, must be approved by the MPO or other agency authorized to make such estimates for the urban area.

(b) The analyses required under this subpart must be based on the latest and most accurate emission estimation techniques available as described below, unless such techniques are inappropriate. If such techniques are inappropriate and written approval of the EPA Regional Administrator is obtained for any modification or substitution, they may be modified or another technique substituted on a case-by-case basis or, where appropriate, on a generic basis for a specific Federal agency program.

(1) For motor vehicle emissions, the most current version of the motor vehicle emissions model specified by EPA and available for use in the preparation or revision of SIPs in that State must be used for the conformity analysis as specified in paragraphs (b)(1) (i) and (ii) of this section:

(i) The EPA must publish in the FEDERAL REGISTER a notice of availability of any new motor vehicle emissions model; and

(ii) A grace period of three months shall apply during which the motor vehicle emissions model previously specified by EPA as the most current version may be used. Conformity analyses for which the analysis was begun during the grace period or no more than 3 years before the FEDERAL REGISTER notice of availability of the latest emission model may continue to use the previous version of the model specified by EPA.

(2) For non-motor vehicle sources, including stationary and area source emissions, the latest emission factors specified by EPA in the ''Compilation of Air Pollutant Emission Factors (AP–42)''[1] must be used for the conformity analysis unless more accurate emission data are available, such as actual stack test data from stationary sources which are part of the conformity analysis.

(c) The air quality modeling analyses required under this subpart must be based on the applicable air quality models, data bases, and other requirements specified in the most recent version of the ''Guideline on Air Quality Models (Revised)'' (1986), including supplements (EPA publication no. 450/2–78–027R)[2], unless:

(1) The guideline techniques are inappropriate, in which case the model may be modified or another model substituted on a case-by-case basis or, where appropriate, on a generic basis for a specific Federal agency program; and

(2) Written approval of the EPA Regional Administrator is obtained for any modification or substitution.

(d) The analyses required under this subpart, except § 51.858(a)(1), must be based on the total of direct and indirect emissions from the action and must reflect emission scenarios that are expected to occur under each of the following cases:

(1) The Act mandated attainment year or, if applicable, the farthest year for which emissions are projected in the maintenance plan;

(2) The year during which the total of direct and indirect emissions from the action is expected to be the greatest on an annual basis; and

(3) any year for which the applicable SIP specifies an emissions budget.

§ 51.860 Mitigation of air quality impacts.

(a) Any measures that are intended to mitigate air quality impacts must be identified and the process for implementation and enforcement of such measures must be described, including

[1] Copies may be obtained from the Technical Support Division of OAQPS, EPA, MD–14, Research Triangle Park, NC 27711.

[2] See footnote 1 at § 51.859(b)(2).

an implementation schedule containing explicit timelines for implementation.

(b) Prior to determining that a Federal action is in conformity, the Federal agency making the conformity determination must obtain written commitments from the appropriate persons or agencies to implement any mitigation measures which are identified as conditions for making conformity determinations.

(c) Persons or agencies voluntarily committing to mitigation measures to facilitate positive conformity determinations must comply with the obligations of such commitments.

(d) In instances where the Federal agency is licensing, permitting or otherwise approving the action of another governmental or private entity, approval by the Federal agency must be conditioned on the other entity meeting the mitigation measures set forth in the conformity determination.

(e) When necessary because of changed circumstances, mitigation measures may be modified so long as the new mitigation measures continue to support the conformity determination. Any proposed change in the mitigation measures is subject to the reporting requirements of §51.856 and the public participation requirements of §51.857.

(f) The implementation plan revision required in §51.851 shall provide that written commitments to mitigation measures must be obtained prior to a positive conformity determination and that such commitments must be fulfilled.

(g) After a State revises its SIP to adopt its general conformity rules and EPA approves that SIP revision, any agreements, including mitigation measures, necessary for a conformity determination will be both State and federally enforceable. Enforceability through the applicable SIP will apply to all persons who agree to mitigate direct and indirect emissions associated with a Federal action for a conformity determination.

APPENDIXES A–K [RESERVED]

APPENDIX L TO PART 51—EXAMPLE REGULATIONS FOR PREVENTION OF AIR POLLUTION EMERGENCY EPISODES

The example regulations presented herein reflect generally recognized ways of preventing air pollution from reaching levels that would cause imminent and substantial endangerment to the health of persons. States are required under subpart H to have emergency episodes plans but they are not required to adopt the regulations presented herein.

1.0 *Air pollution emergency*. This regulation is designed to prevent the excessive buildup of air pollutants during air pollution episodes, thereby preventing the occurrence of an emergency due to the effects of these pollutants on the health of persons.

1.1 *Episode criteria*. Conditions justifying the proclamation of an air pollution alert, air pollution warning, or air pollution emergency shall be deemed to exist whenever the Director determines that the accumulation of air pollutants in any place is attaining or has attained levels which could, if such levels are sustained or exceeded, lead to a substantial threat to the health of persons. In making this determination, the Director will be guided by the following criteria:

(a) *Air Pollution Forecast:* An internal watch by the Department of Air Pollution Control shall be actuated by a National Weather Service advisory that Atmospheric Stagnation Advisory is in effect or the equivalent local forecast of stagnant atmospheric condition.

(b) *Alert:* The Alert level is that concentration of pollutants at which first stage control actions is to begin. An Alert will be declared when any one of the following levels is reached at any monitoring site:

SO_2—800 μg/m^3 (0.3 p.p.m.), 24-hour average.
PM_{10}—350 μg/m^3, 24-hour average.
CO—17 mg/m^3 (15 p.p.m.), 8-hour average.
Ozone (O_2)=400 μg/m^3 (0.2 ppm)-hour average.
NO_2–1130 μg/m^3 (0.6 p.p.m.), 1-hour average, 282 μg/m^3 (0.15 p.p.m.), 24-hour average.

In addition to the levels listed for the above pollutants, meterological conditions are such that pollutant concentrations can be expected to remain at the above levels for twelve (12) or more hours or increase, or in the case of ozone, the situation is likely to reoccur within the next 24-hours unless control actions are taken.

(c) *Warning:* The warning level indicates that air quality is continuing to degrade and that additional control actions are necessary. A warning will be declared when any one of the following levels is reached at any monitoring site:

SO_2—1,600 μg/m^3 (0.6 p.p.m.), 24-hour average.
PM_{10}—420 μg/m^3, 24-hour average.
CO—34 mg/m^3 (30 p.p.m.), 8-hour average.
Ozone (O_3)—800 μg/m^3 (0.4 p.p.m.), 1-hour average.
NO_2—2,260 μg/m^3 (1.2 ppm)—1-hour average; 565μg/m^3 (0.3 ppm), 24-hour average.

In addition to the levels listed for the above pollutants, meterological conditions are such that pollutant concentrations can be expected to remain at the above levels for twelve (12) or more hours or increase, or in the case of ozone, the situation is likely to reoccur within the next 24-hours unless control actions are taken.

(d) *Emergency:* The emergency level indicates that air quality is continuing to degrade toward a level of significant harm to the health of persons and that the most stringent control actions are necessary. An emergency will be declared when any one of the following levels is reached at any monitoring site:

SO_2—2,100 μg/m^3 (0.8 p.p.m.), 24-hour average.
PM_{10}—500 μg/m^3, 24-hour average.
CO—46 mg/m^3 (40 p.p.m.), 8-hour average.
Ozone (O_3)—1,000 μg/m^3 (0.5 p.p.m.), 1-hour average.
NO_2–3,000 μg/m^3 (1.6 ppm), 1-hour average; 750 μg/m^3 (0.4 ppm), 24-hour average.

In addition to the levels listed for the above pollutants, meterological conditions are such that pollutant concentrations can be expected to remain at the above levels for twelve (12) or more hours or increase, or in the case of ozone, the situation is likely to reoccur within the next 24-hours unless control actions are taken.

(e) *Termination:* Once declared, any status reached by application of these criteria will remain in effect until the criteria for that level are no longer met. At such time, the next lower status will be assumed.

1.2 *Emission reduction plans.* (a) Air Pollution Alert—When the Director declares an Air Pollution Alert, any person responsible for the operation of a source of air pollutants as set forth in Table I shall take all Air Pollution Alert actions as required for such source of air pollutants and shall put into effect the preplanned abatement strategy for an Air Pollution Alert.

(b) Air Pollution Warning—When the Director declares an Air Pollution Warning, any person responsible for the operation of a source of air pollutants as set forth in Table II shall take all Air Pollution Warning actions as required for such source of air pollutants and shall put into effect the preplanned abatement strategy for an Air Pollution Warning.

(c) Air Pollution Emergency—When the Director declares an Air Pollution Emergency, any person responsible for the operation of a source of air pollutants as described in Table III shall take all Air Pollution Emergency actions as required for such source of air pollutants and shall put into effect the preplanned abatement strategy for an Air Pollution Emergency.

(d) When the Director determines that a specified criteria level has been reached at one or more monitoring sites solely because of emissions from a limited number of sources, he shall notify such source(s) that the preplanned abatement strategies of Tables I, II, and III or the standby plans are required, insofar as it applies to such source(s), and shall be put into effect until the criteria of the specified level are no longer met.

1.3 *Preplanned abatement strategies,* (a) Any person responsible for the operation of a source of air pollutants as set forth in Tables I–III shall prepare standby plans for reducing the emission of air pollutants during periods of an Air Pollution Alert, Air Pollution Warning, and Air Pollution Emergency. Standby plans shall be designed to reduce or eliminate emissions of air pollutants in accordance with the objectives set forth in Tables I–III which are made a part of this section.

(b) Any person responsible for the operation of a source of air pollutants not set forth under section 1.3(a) shall, when requested by the Director in writing, prepare standby plans for reducing the emission of air pollutants during periods of an Air Pollution Alert, Air Pollution Warning, and Air Pollution Emergency. Standby plans shall be designed to reduce or eliminate emissions of air pollutants in accordance with the objectives set forth in Tables I–III.

(c) Standby plans as required under section 1.3(a) and (b) shall be in writing and identify the sources of air pollutants, the approximate amount of reduction of pollutants and a brief description of the manner in which the reduction will be achieved during an Air Pollution Alert, Air Pollution Warning, and Air Pollution Emergency.

(d) During a condition of Air Pollution Alert, Air Pollution Warning, and Air Pollution Emergency, standby plans as required by this section shall be made available on the premises to any person authorized to enforce the provisions of applicable rules and regulations.

(e) Standby plans as required by this section shall be submitted to the Director upon request within thirty (30) days of the receipt of such request; such standby plans shall be subject to review and approval by the Director. If, in the opinion of the Director, a standby plan does not effectively carry out the objectives as set forth in Table I–III, the Director may disapprove it, state his reason for disapproval and order the preparation of an amended standby plan within the time period specified in the order.

TABLE I—ABATEMENT STRATEGIES EMISSION REDUCTION PLANS ALERT LEVEL

Part A. General

1. There shall be no open burning by any persons of tree waste, vegetation, refuse, or debris in any form.

2. The use of incinerators for the disposal of any form of solid waste shall be limited to the hours between 12 noon and 4 p.m.

3. Persons operating fuel-burning equipment which required boiler lancing or soot blowing shall perform such operations only between the hours of 12 noon and 4 p.m.

4. Persons operating motor vehicles should eliminate all unnecessary operations.

Part B. Source curtailment

Any person responsible for the operation of a source of air pollutants listed below shall take all required control actions for this Alert Level.

Source of air pollution	Control action
1. Coal or oil-fired electric power generating facilities	a. Substantial reduction by utilization of fuels having low ash and sulfur content. b. Maximum utilization of mid-day (12 noon to 4 p.m.) atmospheric turbulence for boiler lancing and soot blowing. c. Substantial reduction by diverting electric power generation to facilities outside of Alert Area.
2. Coal and oil-fired process steam generating facilities	a. Substantial reduction by utilization of fuels having low ash and sulfur content. b. Maximum utilization of mid-day (12 noon to 4 p.m.) atmospheric turbulence for boiler lancing and soot blowing. c. Substantial reduction of steam load demands consistent with continuing plant operations.
3. Manufacturing industries of the following classifications: Primary Metals Industry. Petroleum Refining Operations. Chemical Industries. Mineral Processing Industries. Paper and Allied Products. Grain Industry.	a. Substantial reduction of air pollutants from manufacturing operations by curtailing, postponing, or deferring production and all operations. b. Maximum reduction by deferring trade waste disposal operations which emit solid particles, gas vapors or malodorous substances. c. Maximum reduction of heat load demands for processing. d. Maximum utilization of mid-day (12 noon to 4 p.m.) atmospheric turbulence for boiler lancing and soot blowing.

TABLE II—EMISSION REDUCTION PLANS

WARNING LEVEL

Part A. General

1. There shall be no open burning by any persons of tree waste, vegetation, refuse, or debris in any form.

2. The use of incinerators for the disposal of any form of solid waste or liquid waste shall be prohibited.

3. Persons operating fuel-burning equipment which requires boiler lancing or soot blowing shall perform such operations only between the hours of 12 noon and 4 p.m.

4. Persons operating motor vehicles must reduce operations by the use of car pools and increased use of public transportation and elimination of unnecessary operation.

Part B. Source curtailment

Any person responsible for the operation of a source of air pollutants listed below shall take all required control actions for this Warning Level.

Source of air pollution	Control action
1. Coal or oil-fired process steam generating facilities	a. Maximum reduction by utilization of fuels having lowest ash and sulfur content. b. Maximum utilization of mid-day (12 noon to 4 p.m.) atmospheric turbulence for boiler lancing and soot blowing. c. Maximum reduction by diverting electric power generation to facilities outside of Warning Area.
2. Oil and oil-fired process steam generating facilities	a. Maximum reduction by utilization of fuels having the lowest available ash and sulfur content. b. Maximum utilization of mid-day (12 noon to 4 p.m.) atmospheric turbulence for boiler lancing and soot blowing. c. Making ready for use a plan of action to be taken if an emergency develops.

Source of air pollution	Control action
3. Manufacturing industries which require considerable lead time for shut-down including the following classifications: Petroleum Refining. Chemical Industries. Primary Metals Industries. Glass Industries. Paper and Allied Products.	a. Maximum reduction of air contaminants from manufacturing operations by, if necessary, assuming reasonable economic hardships by postponing production and allied operation. b. Maximum reduction by deferring trade waste disposal operations which emit solid particles, gases, vapors or malodorous substances. c. Maximum reduction of heat load demands for processing. d. Maximum utilization of mid-day (12 noon to 4 p.m.) atmospheric turbulence for boiler lancing or soot blowing.
4. Manufacturing industries require relatively short lead times for shut-down including the following classifications: Primary Metals Industries. Chemical Industries. Mineral Processing Industries. Grain Industry.	a. Elimination of air pollutants from manufacturing operations by ceasing, curtailing, postponing or deferring production and allied operations to the extent possible without causing injury to persons or damage to equipment. b. Elimination of air pollutants from trade waste disposal processes which emit solid particles, gases, vapors or malodorous substances. c. Maximum reduction of heat load demands for processing. d. Maximum utilization of mid-day (12 noon to 4 p.m.) atmospheric turbulence for boiler lancing or soot blowing.

TABLE III—EMISSION REDUCTION PLANS

EMERGENCY LEVEL

Part A. General

1. There shall be no open burning by any persons of tree waste, vegetation, refuse, or debris in any form.

2. The use of incinerators for the disposal of any form of solid or liquid waste shall be prohibited.

3. All places of employment described below shall immediately cease operations.

a. Mining and quarrying of nonmetallic minerals.

b. All construction work except that which must proceed to avoid emergent physical harm.

c. All manufacturing establishments except those required to have in force an air pollution emergency plan.

d. All wholesale trade establishments; i.e., places of business primarily engaged in selling merchandise to retailers, or industrial, commercial, institutional or professional users, or to other wholesalers, or acting as agents in buying merchandise for or selling merchandise to such persons or companies, except those engaged in the distribution of drugs, surgical supplies and food.

e. All offices of local, county and State government including authorities, joint meetings, and other public bodies excepting such agencies which are determined by the chief administrative officer of local, county, or State government, authorities, joint meetings and other public bodies to be vital for public safety and welfare and the enforcement of the provisions of this order.

f. All retail trade establishments except pharmacies, surgical supply distributors, and stores primarily engaged in the sale of food.

g. Banks, credit agencies other than banks, securities and commodities brokers, dealers, exchanges and services; offices of insurance carriers, agents and brokers, real estate offices.

h. Wholesale and retail laundries, laundry services and cleaning and dyeing establishments; photographic studios; beauty shops, barber shops, shoe repair shops.

i. Advertising offices; consumer credit reporting, adjustment and collection agencies; duplicating, addressing, blueprinting; photocopying, mailing, mailing list and stenographic services; equipment rental services, commercial testing laboratories.

j. Automobile repair, automobile services, garages.

k. Establishments rendering amusement and recreational services including motion picture theaters.

l. Elementary and secondary schools, colleges, universities, professional schools, junior colleges, vocational schools, and public and private libraries.

4. All commercial and manufacturing establishments not included in this order will institute such actions as will result in maximum reduction of air pollutants from their operation by ceasing, curtailing, or postponing operations which emit air pollutants to the extent possible without causing injury to persons or damage to equipment.

5. The use of motor vehicles is prohibited except in emergencies with the approval of local or State police.

Part B. Source curtailment

Any person responsible for the operation of a source of air pollutants listed below shall take all required control actions for this Emergency Level.

Source of air pollution	Control action
1. Coal or oil-fired electric power generating facilities	a. Maximum reduction by utilization of fuels having lowest ash and sulfur content. b. Maximum utilization of mid-day (12 noon to 4 p.m.) atmospheric turbulence for boiler lancing or soot blowing. c. Maximum reduction by diverting electric power generation to facilities outside of Emergency Area.
2. Coal and oil-fired process steam generating facilities	a. Maximum reduction by reducing heat and steam demands to absolute necessities consistent with preventing equipment damage. b. Maximum utilization of mid-day (12 noon to 4 p.m.) atmospheric turbulence for boiler lancing and soot blowing. c. Taking the action called for in the emergency plan.
3. Manufacturing industries of the following classifications: Primary Metals Industries. Petroleum Refining. Chemical Industries. Mineral Processing Industries. Grain Industry. Paper and Allied Products.	a. Elimination of air pollutants from manufacturing operations by ceasing, curtailing, postponing or deferring production and allied operations to the extent possible without causing injury to persons or damage to equipment. b. Elimination of air pollutants from trade waste disposal processes which emit solid particles, gases, vapors or malodorous substances. c. Maximum reduction of heat load demands for processing. d. Maximum utilization of mid-day (12 noon to 4 p.m.) atmospheric turbulence for boiler lancing or soot blowing.

(Secs. 110, 301(a), 313, 319, Clean Air Act (42 U.S.C. 7410, 7601(a), 7613, 7619))

[36 FR 22398, Nov. 25, 1971; 36 FR 24002, Dec. 17, 1971, as amended at 37 FR 26312, Dec. 9, 1972; 40 FR 36333, Aug. 20, 1975; 41 FR 35676, Aug. 24, 1976; 44 FR 27570, May 10, 1979; 51 FR 40675, Nov. 7, 1986; 52 FR 24714, July 1, 1987]

APPENDIX M TO PART 51—RECOMMENDED TEST METHODS FOR STATE IMPLEMENTATION PLANS

Method 201—Determination of PM_{10} Emissions (Exhaust Gas Recycle Procedure).
Method 201A—Determination of PM_{10} Emissions (Constant Sampling Rate Procedure).
Method 202—Determination of Condensible Particulate Emissions From Stationary Sources
Method 204—Criteria for and Verification of a Permanent or Temporary Total Enclosure.
Method 204A—Volatile Organic Compounds Content in Liquid Input Stream.
Method 204B—Volatile Organic Compounds Emissions in Captured Stream.
Method 204C—Volatile Organic Compounds Emissions in Captured Stream (Dilution Technique).
Method 204D—Volatile Organic Compounds Emissions in Uncaptured Stream from Temporary Total Enclosure.
Method 204E—Volatile Organic Compounds Emissions in Uncaptured Stream from Building Enclosure.
Method 204F—Volatile Organic Compounds Content in Liquid Input Stream (Distillation Approach).
Method 205—Verification of Gas Dilution Systems for Field Instrument Calibrations

Presented herein are recommended test methods for measuring air pollutantemanating from an emission source. They are provided for States to use in their plans to meet the requirements of subpart K—Source Surveillance.

The State may also choose to adopt other methods to meet the requirements of subpart K of this part, subject to the normal plan review process.

The State may also meet the requirements of subpart K of this part by adopting, again subject to the normal plan review process, any of the relevant methods in appendix A to 40 CFR part 60.

METHOD 201—DETERMINATION OF PM_{10} EMISSIONS

(EXHAUST GAS RECYCLE PROCEDURE)

1. Applicability and Principle

1.1 Applicability. This method applies to the in-stack measurement of particulate matter (PM) emissions equal to or less than an aerodynamic diameter of nominally 10 µm (PM_{10}) from stationary sources. The EPA recognizes that condensible emissions not collected by an in-stack method are also $PM_{10,}$ and that emissions that contribute to ambient PM_{10} levels are the sum of condensible emissions and emissions measured by an in-stack PM_{10} method, such as this method or Method 201A. Therefore, for establishing source contributions to ambient levels of $PM_{10,}$ such as for emission inventory purposes, EPA suggests that source PM_{10} measurement include both in-stack PM_{10} and condensible emissions. Condensible missions may be measured by an impinger analysis in combination with this method.

1.2 Principle. A gas sample is isokinetically extracted from the source. An in-stack cyclone is used to separate PM greater than PM_{10}, and an in-stack glass fiber filter is used to collect the PM_{10}. To maintain isokinetic flow rate conditions at the tip of the probe and a constant flow rate through the cyclone, a clean, dried portion of the sample gas at stack temperature is recycled into the nozzle. The particulate mass is determined gravimetrically after removal of uncombined water.

2. Apparatus

NOTE: Method 5 as cited in this method refers to the method in 40 CFR part 60, appendix A.

2.1 Sampling Train. A schematic of the exhaust of the exhaust gas recycle (EGR) train is shown in Figure 1 of this method.

2.1.1 Nozzle with Recycle Attachment. Stainless steel (316 or equivalent) with a sharp tapered leading edge, and recycle attachment welded directly on the side of the nozzle (see schematic in Figure 2 of this method). The angle of the taper shall be on the outside. Use only straight sampling nozzles. ''Gooseneck'' or other nozzle extensions designed to turn the sample gas flow 90°, as in Method 5 are not acceptable. Locate a thermocouple in the recycle attachment to measure the temperature of the recycle gas as shown in Figure 3 of this method. The recycle attachment shall be made of stainless steel and shall be connected to the probe and nozzle with stainless steel fittings. Two nozzle sizes, e.g., 0.125 and 0.160 in., should be available to allow isokinetic sampling to be conducted over a range of flow rates. Calibrate each nozzle as described in Method 5, Section 5.1.

2.1.2 PM_{10} Sizer. Cyclone, meeting the specifications in Section 5.7 of this method.

2.1.3 Filter Holder. 63mm, stainless steel. An Andersen filter, part number SE274, has been found to be acceptable for the in-stack filter.

NOTE: Mention of trade names or specific products does not constitute endorsement by the Environmental Protection Agency.

2.1.4 Pitot Tube. Same as in Method 5, Section 2.1.3. Attach the pitot to the pitot lines with stainless steel fittings and to the cyclone in a configuration similar to that shown in Figure 3 of this method. The pitot lines shall be made of heat resistant material and attached to the probe with stainless steel fittings.

2.1.5 EGR Probe. Stainless steel, 15.9-mm (⅝-in.) ID tubing with a probe liner, stainless steel 9.53-mm (⅜-in.) ID stainless steel recycle tubing, two 6.35-mm (¼-in.) ID stainless steel tubing for the pitot tube extensions, three thermocouple leads, and one power lead, all contained by stainless steel tubing with a diameter of approximately 51 mm (2.0 in.). Design considerations should include minimum weight construction materials sufficient for probe structural strength. Wrap the sample and recycle tubes with a heating tape to heat the sample and recycle gases to stack temperature.

2.1.6 Condenser. Same as in Method 5, Section 2.1.7.

2.1.7 Umbilical Connector. Flexible tubing with thermocouple and power leads of sufficient length to connect probe to meter and flow control console.

2.1.8 Vacuum Pump. Leak-tight, oil-less, noncontaminating, with an absolute filter, ''HEPA'' type, at the pump exit. A Gast Model 0522–V103 G18DX pump has been found to be satisfactory.

2.1.9 Meter and Flow Control Console. System consisting of a dry gas meter and calibrated orifice for measuring sample flow rate and capable of measuring volume to ±2 percent, calibrated laminar flow elements (LFE's) or equivalent for measuring total and sample flow rates, probe heater control, and manometers and magnehelic gauges (as shown in Figures 4 and 5 of this method), or equivalent. Temperatures needed for calculations include stack, recycle, probe, dry gas meter, filter, and total flow. Flow measurements include velocity head (Δp), orifice differential pressure (ΔH), total flow, recycle flow, and total back-pressure through the system.

2.1.10 Barometer. Same as in Method 5, Section 2.1.9.

2.1.11 Rubber Tubing. 6.35-mm (¼-in.) ID flexible rubber tubing.

2.2 Sample Recovery.

2.2.1 Nozzle, Cyclone, and Filter Holder Brushes. Nylon bristle brushes property sized and shaped for cleaning the nozzle, cyclone, filter holder, and probe or probe liner, with stainless steel wire shafts and handles.

2.2.2 Wash Bottles, Glass Sample Storage Containers, Petri Dishes, Graduated Cylinder and Balance, Plastic Storage Containers, and Funnels. Same as Method 5, Sections 2.2.2 through 2.2.6 and 2.2.8, respectively.

2.3 Analysis. Same as in Method 5, Section 2.3.

3. Reagents

The reagents used in sampling, sample recovery, and analysis are the same as that specified in Method 5, Sections 3.1, 3.2, and 3.3, respectively.

4. Procedure

4.1 Sampling. The complexity of this method is such that, in order to obtain reliable results, testers should be trained and experienced with the test procedures.

4.1.1 Pretest Preparation. Same as in Method 5, Section 4.1.1.

4.1.2 Preliminary Determinations. Same as Method 5, Section 4.1.2, except use the directions on nozzle size selection in this section.

Use of the EGR method may require a minimum sampling port diameter of 0.2 m (6 in.). Also, the required maximum number of sample traverse points at any location shall be 12.

4.1.2.1 The cyclone and filter holder must be in-stack or at stack temperature during sampling. The blockage effects of the EGR sampling assembly will be minimal if the cross-sectional area of the sampling assembly is 3 percent or less of the cross-sectional area of the duct and a pitot coefficient of 0.84 may be assigned to the pitot. If the cross-sectional area of the assembly is greater than 3 percent of the cross-sectional area of the duct, then either determine the pitot coefficient at sampling conditions or use a standard pitot with a known coefficient in a configuration with the EGR sampling assembly such that flow disturbances are minimized.

4.1.2.2 Construct a setup of pressure drops for various Δp's and temperatures. A computer is useful for these calculations. An example of the output of the EGR setup program is shown in Figure 6 of this method, and directions on its use are in section 4.1.5.2 of this method. Computer programs, written in IBM BASIC computer language, to do these types of setup and reduction calculations for the EGR procedure, are available through the National Technical Information Services (NTIS), Accession number PB90–500000, 5285 Port Royal Road, Springfield, VA 22161.

4.1.2.3 The EGR setup program allows the tester to select the nozzle size based on anticipated average stack conditions and prints a setup sheet for field use. The amount of recycle through the nozzle should be between 10 and 80 percent. Inputs for the EGR setup program are stack temperature (minimum, maximum, and average), stack velocity (minimum, maximum, and average), atmospheric pressure, stack static pressure, meter box temperature, stack moisture, percent 0_2, and percent CO_2 in the stack gas, pitot coefficient (C_p), orifice $\Delta H_@$, flow rate measurement calibration values [slope (m) and y-intercept (b) of the calibration curve], and the number of nozzles available and their diameters.

4.1.2.4 A less rigorous calculation for the setup sheet can be done manually using the equations on the example worksheets in Figures 7, 8, and 9 of this method, or by a Hewlett-Packard HP41 calculator using the program provided in appendix D of the EGR operators manual, entitled *Applications Guide for Source PM_{10} Exhaust Gas Recycle Sampling System*. This calculation uses an approximation of the total flow rate and agrees within 1 percent of the exact solution for pressure drops at stack temperatures from 38 to 260 °C (100 to 500 °F) and stack moisture up to 50 percent. Also, the example worksheets use a constant stack temperature in the calculation, ingoring the complicated temperature dependence from all three pressure drop equations. Errors for this at stack temperatures ±28 °C (±50 °F) of the temperature used in the setup calculations are within 5 percent for flow rate and within 5 percent for cyclone cut size.

4.1.2.5 The pressure upstream of the LFE's is assumed to be constant at 0.6 in. Hg in the EGR setup calculations.

4.1.2.6 The setup sheet constructed using this procedure shall be similar to Figure 6 of this method. Inputs needed for the calculation are the same as for the setup computer except that stack velocities are not needed.

4.1.3 Preparation of Collection Train. Same as in Method 5, Section 4.1.3, except use the following directions to set up the train.

4.1.3.1 Assemble the EGR sampling device, and attach it to probe as shown in Figure 3 of this method. If stack temperatures exceed 260 °C (500 °F), then assemble the EGR cyclone without the O-ring and reduce the vacuum requirement to 130 mm Hg (5.0 in. Hg) in the leak-check procedure in Section 4.1.4.3.2 of this method.

4.1.3.2 Connect the proble directly to the filter holder and condenser as in Method 5. Connect the condenser and probe to the meter and flow control console with the umbilical connector. Plug in the pump and attach pump lines to the meter and flow control console.

4.1.4 Leak-Check Procedure. The leak-check for the EGR Method consists of two parts: the sample-side and the recycle-side. The sample-side leak-check is required at the beginning of the run with the cyclone attached, and after the run with the cyclone removed. The cyclone is removed before the post-test leak-check to prevent any disturbance of the collected sample prior to analysis. The recycle-side leak-check tests the leak tight integrity of the recycle components and is required prior to the first test run and after each shipment.

4.1.4.1 Pretest Leak-Check. A pretest leak-check of the entire sample-side, including the cyclone and nozzle, is required. Use the leak-check procedure in Section 4.1.4.3 of this method to conduct a pretest leak-check.

4.1.4.2 Leak-Checks During Sample Run. Same as in Method 5, Section 4.1.4.1.

4.1.4.3 Post-Test Leak-Check. A leak-check is required at the conclusion of each sampling run. Remove the cyclone before the leak-check to prevent the vacuum created by the cooling of the probe from disturbing the collected sample and use the following procedure to conduct a post-test leak-check.

4.1.4.3.1 The sample-side leak-check is performed as follows: After removing the cyclone, seal the probe with a leak-tight stopper. Before starting pump, close the coarse total valve and both recycle valves, and open completely the sample back pressure valve and the fine total valve. After turning the

pump on, partially open the coarse total valve slowly to prevent a surge in the manometer. Adjust the vacuum to at least 381 mm Hg (15.0 in. Hg) with the fine total valve. If the desired vacuum is exceeded, either leak-check at this higher vacuum or end the leak-check as shown below and start over.

CAUTION: Do not decrease the vacuum with any of the valves. This may cause a rupture of the filter.

NOTE: A lower vacuum may be used, provided that it is not exceeded during the test.

4.1.4.3.2 Leak rates in excess of 0.00057 m^3/min (0.020 ft^3/min) are unacceptable. If the leak rate is too high, void the sampling run.

4.1.4.3.3 To complete the leak-check, slowly remove the stopper from the nozzle until the vacuum is near zero, then immediately turn off the pump. This procedure sequence prevents a pressure surge in the manometer fluid and rupture of the filter.

4.1.4.3.4 The recycle-side leak-check is performed as follows: Close the coarse and fine total valves and sample back pressure valve. Plug the sample inlet at the meter box. Turn on the power and the pump, close the recycle valves, and open the total flow valves. Adjust the total flow fine adjust valve until a vacuum of 25 inches of mercury is achieved. If the desired vacuum is exceeded, either leak-check at this higher vacuum, or end the leak-check and start over. Minimum acceptable leak rates are the same as for the sample-side. If the leak rate is too high, void the sampling run.

4.1.5 EGR Train Operation. Same as in Method 5, Section 4.1.5, except omit references to nomographs and recommendations about changing the filter assembly during a run.

4.1.5.1 Record the data required on a data sheet such as the one shown in Figure 10 of this method. Make periodic checks of the manometer level and zero to ensure correct ΔH and Δp values. An acceptable procedure for checking the zero is to equalize the pressure at both ends of the manometer by pulling off the tubing, allowing the fluid to equilibrate and, if necessary, to re-zero. Maintain the probe temperature to within 11 °C (20 °F) of stack temperature.

4.1.5.2 The procedure for using the example EGR setup sheet is as follows: Obtain a stack velocity reading from the pitot manometer (Δp), and find this value on the ordinate axis of the setup sheet. Find the stack temperature on the abscissa. Where these two values intersect are the differential pressures necessary to achieve isokineticity and 10 µm cut size (interpolation may be necessary).

4.1.5.3 The top three numbers are differential pressures (in. H_2O), and the bottom number is the percent recycle at these flow settings. Adjust the total flow rate valves, coarse and fine, to the sample value (ΔH) on the setup sheet, and the recycle flow rate valves, coarse and fine, to the recycle flow on the setup sheet.

4.1.5.4 For startup of the EGR sample train, the following procedure is recommended. Preheat the cyclone in the stack for 30 minutes. Close both the sample and recycle coarse valves. Open the fine total, fine recycle, and sample back pressure valves halfway. Ensure that the nozzle is properly aligned with the sample stream. After noting the Δp and stack temperature, select the appropriate ΔH and recycle from the EGR setup sheet. Start the pump and timing device simultaneously. Immediately open both the coarse total and the coarse recycle valves slowly to obtain the approximate desired values. Adjust both the fine total and the fine recycle valves to achieve more precisely the desired values. In the EGR flow system, adjustment of either valve will result in a change in both total and recycle flow rates, and a slight iteration between the total and recycle valves may be necessary. Because the sample back pressure valve controls the total flow rate through the system, it may be necessary to adjust this valve in order to obtain the correct flow rate.

NOTE: Isokinetic sampling and proper operation of the cyclone are not achieved unless the correct ΔH and recycle flow rates are maintained.

4.1.5.5 During the test run, monitor the probe and filter temperatures periodically, and make adjustments as necessary to maintain the desired temperatures. If the sample loading is high, the filter may begin to blind or the cyclone may clog. The filter or the cyclone may be replaced during the sample run. Before changing the filter or cyclone, conduct a leak-check (Section 4.1.4.2 of this method). The total particulate mass shall be the sum of all cyclone and the filter catch during the run. Monitor stack temperature and Δp periodically, and make the necessary adjustments in sampling and recycle flow rates to maintain isokinetic sampling and the proper flow rate through the cyclone. At the end of the run, turn off the pump, close the coarse total valve, and record the final dry gas meter reading. Remove the probe from the stack, and conduct a post-test leak-check as outlined in Section 4.1.4.3 of this method.

4.2 Sample Recovery. Allow the probe to cool. When the probe can be safely handled, wipe off all external PM adhering to the outside of the nozzle, cyclone, and nozzle attachment, and place a cap over the nozzle to prevent losing or gaining PM. Do not cap the nozzle tip tightly while the sampling train is cooling, as this action would create a vacuum in the filter holder. Disconnect the probe from the umbilical connector, and take the probe to the cleanup site. Sample recovery should be conducted in a dry indoor area or, if outside, in an area protected from wind and free of dust. Cap the ends of the

impingers and carry them to the cleanup site. Inspect the components of the train prior to and during disassembly to note any abnormal conditions. Disconnect the pitot from the cyclone. Remove the cyclone from the probe. Recover the sample as follows:

4.2.1 *Container Number 1* (Filter). The recovery shall be the same as that for Container Number 1 in Method 5, Section 4.2.

4.2.2 *Container Number 2* (Cyclone or Large PM Catch). The cyclone must be disassembled and the nozzle removed in order to recover the large PM catch. Quantitatively recover the PM from the interior surfaces of the nozzle and the cyclone, excluding the ''turn around'' cup and the interior surfaces of the exit tube. The recovery shall be the same as that for Container Number 2 in Method 5, Section 4.2.

4.2.3 *Container Number 3* (PM_{10}). Quantitatively recover the PM from all of the surfaces from cyclone exit to the front half of the in-stack filter holder, including the ''turn around'' cup and the interior of the exit tube. The recovery shall be the same as that for Container Number 2 in Method 5, Section 4.2.

4.2.4 *Container Number 4* (Silica Gel). Same as that for Container Number 3 in Method 5, Section 4.2.

4.2.5 *Impinger Water.* Same as in Method 5, Section 4.2, under ''Impinger Water.''

4.3 Analysis. Same as in Method 5, Section 4.3, except handle EGR Container Numbers 1 and 2 like Container Number 1 in Method 5, EGR Container Numbers 3, 4, and 5 like Container Number 3 in Method 5, and EGR Container Number 6 like Container Number 3 in Method 5. Use Figure 11 of this method to record the weights of PM collected.

4.4 Quality Control Procedures. Same as in Method 5, Section 4.4.

4.5 PM_{10} Emission Calculation and Acceptability of Results. Use the EGR reduction program or the procedures in section 6 of this method to calculate PM_{10} emissions and the criteria in section 6.7 of this method to determine the acceptability of the results.

5. Calibration

Maintain an accurate laboratory log of all calibrations.

5.1 Probe Nozzle. Same as in Method 5, Section 5.1.

5.2 Pitot Tube. Same as in Method 5, Section 5.2.

5.3 Meter and Flow Control Console.

5.3.1 Dry Gas Meter. Same as in Method 5, Section 5.3.

5.3.2 LFE Gauges. Calibrate the recycle, total, and inlet total LFE gauges with a manometer. Read and record flow rates at 10, 50, and 90 percent of full scale on the total and recycle pressure gauges. Read and record flow rates at 10, 20, and 30 percent of full scale on the inlet total LFE pressure gauge. Record the total and recycle readings to the nearest 0.3 mm (0.01 in.). Record the inlet total LFE readings to the nearest 3 mm (0.1 in.). Make three separate measurements at each setting and calculate the average. The maximum difference between the average pressure reading and the average manometer reading shall not exceed 1 mm (0.05 in.). If the differences exceed the limit specified, adjust or replace the pressure gauge. After each field use, check the calibration of the pressure gauges.

5.3.3 Total LFE. Same as the metering system in Method 5, Section 5.3.

5.3.4 Recycle LFE. Same as the metering system in Method 5, Section 5.3, except completely close both the coarse and fine recycle valves.

5.4 Probe Heater. Connect the probe to the meter and flow control console with the umbilical connector. Insert a thermocouple into the probe sample line approximately half the length of the probe sample line. Calibrate the probe heater at 66°C (150°F), 121°C (250°F °F), and 177°C (350°F). Turn on the power, and set the probe heater to the specified temperature. Allow the heater to equilibrate, and record the thermocouple temperature and the meter and flow control console temperature to the nearest 0.5°C (1°F). The two temperatures should agree within 5.5°C (10°F). If this agreement is not met, adjust or replace the probe heater controller.

5.5 Temperature Gauges. Connect all thermocouples, and let the meter and flow control console equilibrate to ambient temperature. All thermocouples shall agree to within 1.1°C (2.0°F) with a standard mercury-in-glass thermometer. Replace defective thermocouples.

5.6 Barometer. Calibrate against a standard mercury-in-glass barometer.

5.7 Probe Cyclone and Nozzle Combinations. The probe cyclone and nozzle combinations need not be calibrated if the cyclone meets the design specifications in Figure 12 of this method and the nozzle meets the design specifications in appendix B of the *Application Guide for the Source PM_{10} Exhaust Gas Recycle Sampling System,* EPA/600/3–88–058. This document may be obtained from Roy Huntley at (919) 541–1060. If the nozzles do not meet the design specifications, then test the cyclone and nozzle combination for conformity with the performance specifications (PS's) in Table 1 of this method. The purpose of the PS tests is to determine if the cyclone's sharpness of cut meets minimum performance criteria. If the cyclone does not meet design specifications, then, in addition to the cyclone and nozzle combination conforming to the PS's, calibrate the cyclone and determine the relationship between flow rate, gas viscosity, and gas density. Use the procedures in Section 5.7.5 of this method to conduct PS tests and the procedures in Section 5.8 of this method to calibrate the cyclone. Conduct the PS tests in a wind tunnel

described in Section 5.7.1 of this method and using a particle generation system described in Section 5.7.2 of this method. Use five particle sizes and three wind velocities as listed in Table 2 of this method. Perform a minimum of three replicate measurements of collection efficiency for each of the 15 conditions listed, for a minimum of 45 measurements.

5.7.1 Wind Tunnel. Perform calibration and PS tests in a wind tunnel (or equivalent test apparatus) capable of establishing and maintaining the required gas stream velocities within 10 percent.

5.7.2 Particle Generation System. The particle generation system shall be capable of producing solid monodispersed dye particles with the mass median aerodynamic diameters specified in Table 2 of this method. The particle size distribution verification should be performed on an integrated sample obtained during the sampling period of each test. An acceptable alternative is to verify the size distribution of samples obtained before and after each test, with both samples required to meet the diameter and monodispersity requirements for an acceptable test run.

5.7.2.1 Establish the size of the solid dye particles delivered to the test section of the wind tunnel using the operating parameters of the particle generation system, and verify the size during the tests by microscopic examination of samples of the particles collected on a membrane filter. The particle size, as established by the operating parameters of the generation system, shall be within the tolerance specified in Table 2 of this method. The precision of the particle size verification technique shall be at least ±0.5 µm, and the particle size determined by the verification technique shall not differ by more than 10 percent from that established by the operating parameters of the particle generation system.

5.7.2.2 Certify the monodispersity of the particles for each test either by microscopic inspection of collected particles on filters or by other suitable monitoring techniques such as an optical particle counter followed by a multichannel pulse height analyzer. If the proportion of multiplets and satellites in an aerosol exceeds 10 percent by mass, the particle generation system is unacceptable for purposes of this test. Multiplets are particles that are agglomerated, and satellites are particles that are smaller than the specified size range.

5.7.3 Schematic Drawings. Schematic drawings of the wind tunnel and blower system and other information showing complete procedural details of the test atmosphere generation, verification, and delivery techniques shall be furnished with calibration data to the reviewing agency.

5.7.4 Flow Rate Measurement. Determine the cyclone flow rates with a dry gas meter and a stopwatch, or a calibrated orifice system capable of measuring flow rates to within 2 percent.

5.7.5 Performance Specification Procedure. Establish the test particle generator operation and verify the particle size microscopically. If mondispersity is to be verified by measurements at the beginning and the end of the run rather than by an integrated sample, these measurements may be made at this time.

5.7.5.1 The cyclone cut size (D_{50}) is defined as the aerodynamic diameter of a particle having a 50 percent probability of penetration. Determine the required cyclone flow rate at which D_{50} is 10 µm. A suggested procedure is to vary the cyclone flow rate while keeping a constant particle size of 10 µm. Measure the PM collected in the cyclone (m_c), exit tube (m_t), and filter (m_f). Compute the cyclone efficiency (E_c) as follows:

$$E_c = \frac{m_c}{\left(m_c + m_t + m_f\right)} \times 100$$

5.7.5.2 Perform three replicates and calculate the average cyclone efficiency as follows:

$$E_{avg} = \frac{\left(E_1 + E_2 + E_3\right)}{3}$$

where E_1, E_2, and E_3 are replicate measurements of E_c.

5.7.5.3 Calculate the standard deviation (σ) for the replicate measurements of E_c as follows:

$$\sigma = \left[\frac{\left(E_1^2 + E_2^2 + E_3^2\right) - \frac{\left(E_1 + E_2 + E_3\right)^2}{3}}{2} \right]^{\frac{1}{2}}$$

if σ exceeds 0.10, repeat the replicate runs.

5.7.5.4 Using the cyclone flow rate that produces D_{50} for 10 µm, measure the overall efficiency of the cyclone and nozzle, E_o, at the particle sizes and nominal gas velocities in Table 2 of this method using this following procedure.

5.7.5.5 Set the air velocity in the wind tunnel to one of the nominal gas velocities from Table 2 of this method. Establish isokinetic sampling conditions and the correct flow rate through the sampler (cyclone and nozzle) using recycle capacity so that the D_{50} is 10 µm. Sample long enough to obtain ±5 percent precision on the total collected mass as determined by the precision and the sensitivity of the measuring technique. Determine separately the nozzle catch (m_n), cyclone catch (m_c), cyclone exit tube catch (m_t), and collection filter catch (m_f).

5.7.5.6 Calculate the overall efficiency (E_o) as follows:

$$E_o = \frac{(m_n + m_c)}{(m_n + m_c + m_t + m_f)} \times 100$$

5.7.5.7 Do three replicates for each combination of gas velocities and particle sizes in Table 2 of this method. Calculate E_o for each particle size following the procedures described in this section for determining efficiency. Calculate the standard deviation (σ) for the replicate measurements. If σ exceeds 0.10, repeat the replicate runs.

5.7.6 Criteria for Acceptance. For each of the three gas stream velocities, plot the average E_o as a function of particle size on Figure 13 of this method. Draw a smooth curve for each velocity through all particle sizes. The curve shall be within the banded region for all sizes, and the average E_c for a D_{50} for 10 µm shall be 50 ± 0.5 percent.

5.8 Cyclone Calibration Procedure. The purpose of this section is to develop the relationship between flow rate, gas viscosity, gas density, and D_{50}. This procedure only needs to be done on those cyclones that do not meet the design specifications in Figure 12 of this method.

5.8.1 Calculate cyclone flow rate. Determine the flow rates and D_{50}'s for three different particle sizes between 5 µm and 15 µm, one of which shall be 10 µm. All sizes must be within 0.5 µm. For each size, use a different temperature within 60° C (108° F) of the temperature at which the cyclone is to be used and conduct triplicate runs. A suggested procedure is to keep the particle size constant and vary the flow rate. Some of the values obtained in the PS tests in Section 5.7.5 may be used.

5.8.1.1 On log-log graph paper, plot the Reynolds number (Re) on the abscissa, and the square root of the Stokes 50 number [$(STK_{50})^{1/2}$] on the ordinate for each temperature. Use the following equations:

$$Re = \frac{4\rho Q_{cyc}}{d_{cyc}\pi\mu_{cyc}}$$

$$(Stk_{50})^{\frac{1}{2}} = \left[\frac{4Q_{cyc}(D_{50})^2}{9\pi\,\mu_{cyc}(d_{cyc})^3}\right]^{\frac{1}{2}}$$

where:

Q_{cyc} = Cyclone flow rate cm^3/sec.
ρ = Gas density, g/cm^3.
d_{cyc} = Diameter of cyclone inlet, cm.
μ_{cyc} = Viscosity of gas through the cyclone, poise.
D_{50} = Cyclone cut size, cm.

5.8.1.2 Use a linear regression analysis to determine the slope (m), and the y-intercept (b). Use the following formula to determine Q, the cyclone flow rate required for a cut size of 10 µm.

$$Q = \frac{\pi\mu_{cyc}}{4}\left[(3000)(K_1)^b\right] - (0.5 - m)\left[\frac{T_s}{M_c P_s}\right] m/(m - 0.5)^{(m-1.5)/(m-0.5)}$$

where:

Q = Cyclone flow rate for a cut size of 10 µm, cm^3/sec.
T_s = Stack gas temperature, °K,
d = Diameter of nozzle, cm.
$K_1 = 4.077 \times 10^{-3}$.

5.8.2. Directions for Using Q. Refer to Section 5 of the EGR operators manual for directions in using this expression for Q in the setup calculations.

6. Calculations

6.1 The EGR data reduction calculations are performed by the EGR reduction computer program, which is written in IBM BASIC computer language and is available through NTIS, Accession number PB90-500000, 5285 Port Royal Road, Springfield, Virginia 22161. Examples of program inputs and outputs are shown in Figure 14 of this method.

6.1.1 Calculations can also be done manually, as specified in Method 5, Sections 6.3 through 6.7, and 6.9 through 6.12, with the addition of the following:

6.1.2 Nomenclature.

B_c = Moisture fraction of mixed cyclone gas, by volume, dimensionless.

C_1 = Viscosity constant, 51.12 micropoise for °K (51.05 micropoise for ° R).

C_2 = Viscosity constant, 0.372 micropoise/°K (0.207 micropoise/° R).

C_3 = Viscosity constant, 1.05 X 10^{-4} micropoise/° K^2 (3.24 X 10^{-5} micropoise/° R^2).

C_4 = Viscosity constant, 53.147 micropoise/fraction O_2.

C_5 = Viscosity constant, 74.143 micropoise/fraction H_2O.

D_{50} = Diameter of particles having a 50 percent probability of penetration, µm.

f_{02} = Stack gas fraction O_2, by volume, dry basis.

K_1 = 0.3858 ° K/mm Hg (17.64 °R/in. Hg).

M_c = Wet molecular weight of mixed gas through the PM_{10} cyclone, g/g-mole (lb/lb-mole).

M_d = Dry molecular weight of stack gas, g/g-mole (lb/lb-mole).

P_{bar} = Barometer pressure at sampling site, mm Hg (in. Hg).

P_{in1} = Gauge pressure at inlet to total LFE, mm H_2O (in. H_2O).

P_3 = Absolute stack pressure, mm Hg (in. Hg).

Q_2 = Total cyclone flow rate at wet cyclone conditions, m^3/min (ft^3/min).

$Q_{s(std)}$ = Total cyclone flow rate at standard conditons, dscm/min (dscf/min).

T_m = Average temperature of dry gas meter, °K (°R).

T_s = Average stack gas temperature, °K (°R).

$V_{w(std)}$ = Volume of water vapor in gas sample (standard conditions), scm (scf).

X_T = Total LFE linear calibration constant, m^3/[(min)(mm H_2O]) { ft^3/[(min)(in. H_2O)]}.

Y_T = Total LFE linear calibration constant, dscm/min (dscf/min).

ΔP_T = Pressure differential across total LFE, mm H_2O, (in. H_2O).

θ = Total sampling time, min.

µcyc = Viscosity of mixed cyclone gas, micropoise.

µLFE = Viscosity of gas laminar flow elements, micropoise.

µstd = Viscosity of standard air, 180.1 micropoise.

6.2 PM_{10} Particulate Weight. Determine the weight of PM_{10} by summing the weights obtained from Container Numbers 1 and 3, less the acetone blank.

6.3 Total Particulate Weight. Determine the particulate catch for PM greater than PM_{10} from the weight obtained from Container Number 2 less the acetone blank, and add it to the PM_{10} particulate weight.

6.4 PM_{10} Fraction. Determine the PM_{10} fraction of the total particulate weight by dividing the PM_{10} particulate weight by the total particulate weight.

6.5 Total Cyclone Flow Rate. The average flow rate at standard conditions is determined from the average pressure drop across the total LFE and is calculated as follows:

$$Q_{s(std)} = K_1\left[X_T \Delta P \frac{\mu_{std}}{\mu_{LFE}} + Y_T\right]\frac{P_{bar} + P_{inl}/13.6}{T_m}$$

The flow rate, at actual cyclone conditions, is calculated as follows:

$$Q_s = \frac{T_s}{K_1 P_s}\left[Q_{s(std)} + \frac{V_{m(std)}}{\theta}\right]$$

The flow rate, at actual cyclone conditions, is calculated as follows:

$$Q_s = \frac{T_s}{K_1 P_s}\left[Q_{s(std)} + \frac{V_{m(std)}}{\theta}\right]$$

6.6 Aerodynamic Cut Size. Use the following procedure to determine the aerodynamic cut size (D_{50}).

6.6.1 Determine the water fraction of the mixed gas through the cyclone by using the equation below.

$$B_c = \frac{V_{w(std)}}{Q_{s(std)}\theta + V_{w(std)}}$$

6.6.2 Calculate the cyclone gas viscosity as follows:

$\mu_{cyc} = C_1 + C_2 T_s + C_3 T_s2 + C_4 f_{02} - C_5 B_c$

6.6.3 Calculate the molecular weight on a wet basis of the cyclone gas as follows:

$M_c = M_d(1 - B_c) + 18.0(B_c)$

6.6.4 If the cyclone meets the design specification in Figure 12 of this method, calculate the actual D_{50} of the cyclone for the run as follows:

$$D_{50} = \beta_1 \left[\frac{T_s}{M_c P_s} \right] \frac{0.2.091}{} \left[\frac{\mu_{cyc}}{Q_s} \right] \frac{0.7091}{}$$

where $\beta_1 = 0.1562$.

6.6.5 If the cyclone does not meet the design specifications in Figure 12 of this method, then use the following equation to calculate D_{50}.

$$D_{50} = (3)\,(10)^b \left(7.376 \times 10^{-4}\right)^m \left[\frac{M_c P_s}{T_s} \right] \left[\frac{4 Q_s}{\pi \mu_{cyc}} \right] d^{(1.5-m)}$$

where:

m = Slope of the calibration curve obtained in Section 5.8.2.

b = y-intercept of the calibration curve obtained in Section 5.8.2.

6.7 Acceptable Results. Acceptability of anisokinetic variation is the same as Method 5, Section 6.12.

6.7.1 If 9.0 µm ≤ D_{50} ≤11 µm and 90 ≤ I ≤ 110, the results are acceptable. If D_{50} is greater than 11 µm, the Administrator may accept the results. If D_{50} is less than 9.0 µm, reject the results and repeat the test.

7. Bibliography

1. Same as Bibliography in Method 5.

2. McCain, J.D., J.W. Ragland, and A.D. Williamson. Recommended Methodology for the Determination of Particles Size Distributions in Ducted Sources, Final Report. Prepared for the California Air Resources Board by Southern Research Institute. May 1986.

3. Farthing, W.E., S.S. Dawes, A.D. Williamson, J.D. McCain, R.S. Martin, and J.W. Ragland. Development of Sampling Methods for Source PM–10 Emissions. Southern Research Institute for the Environmental Protection Agency. April 1989.

4. *Application Guide for the Source PM_{10} Exhaust Gas Recycle Sampling System,* EPA/600/3–88–058.

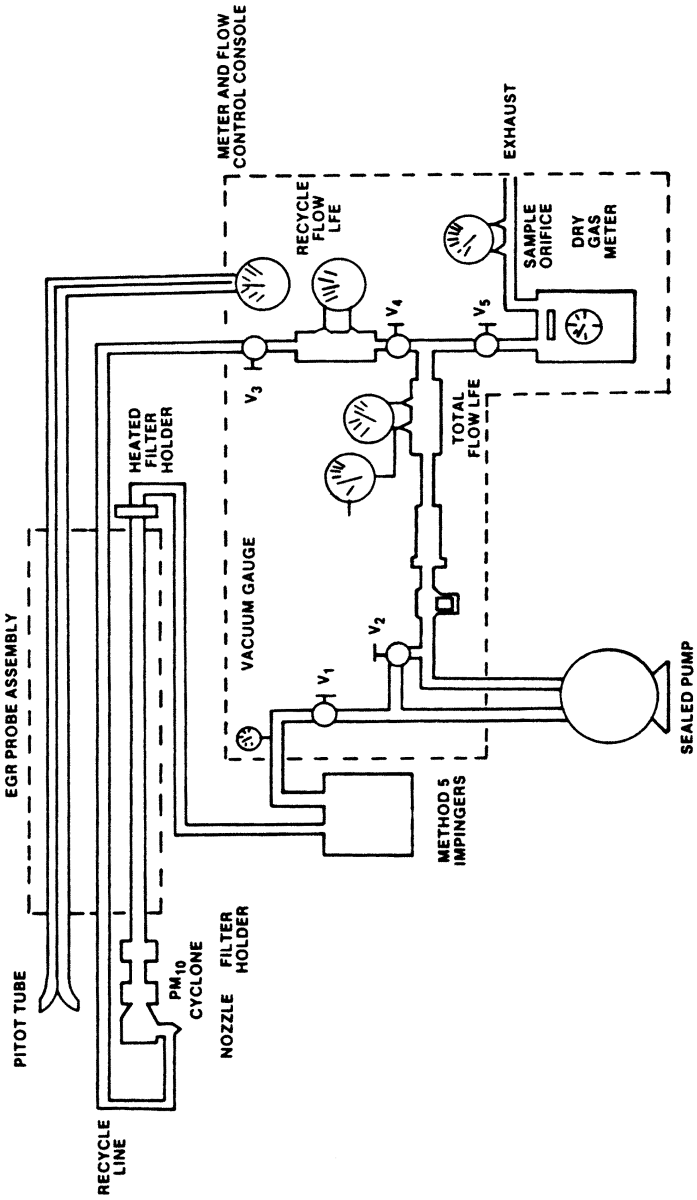

Figure 1. Schematic of the exhaust gas recycle train.

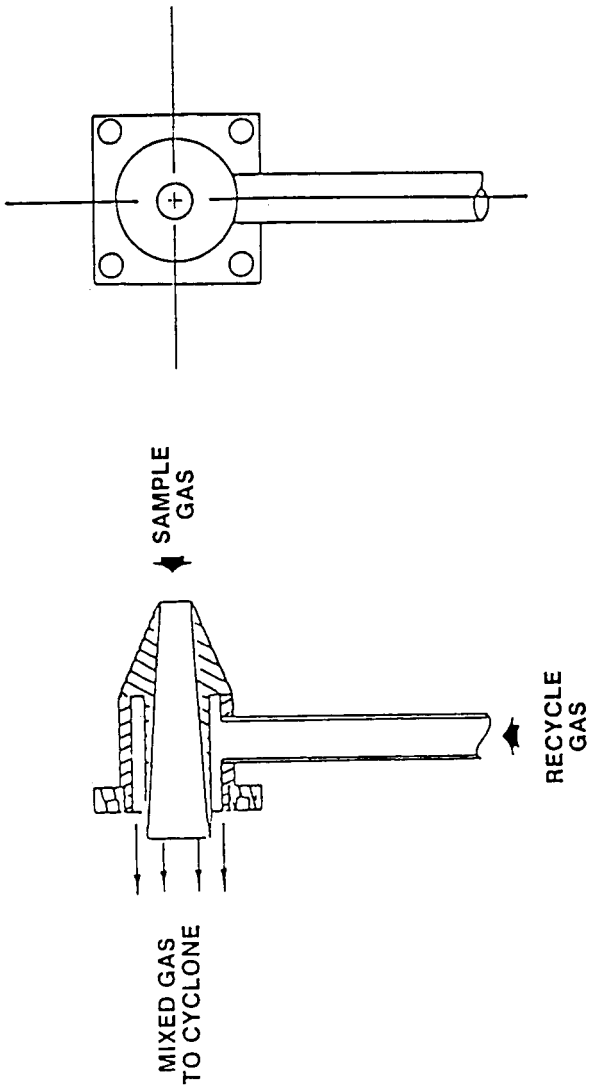

Figure 2. Schematic of EGR nozzle assembly.

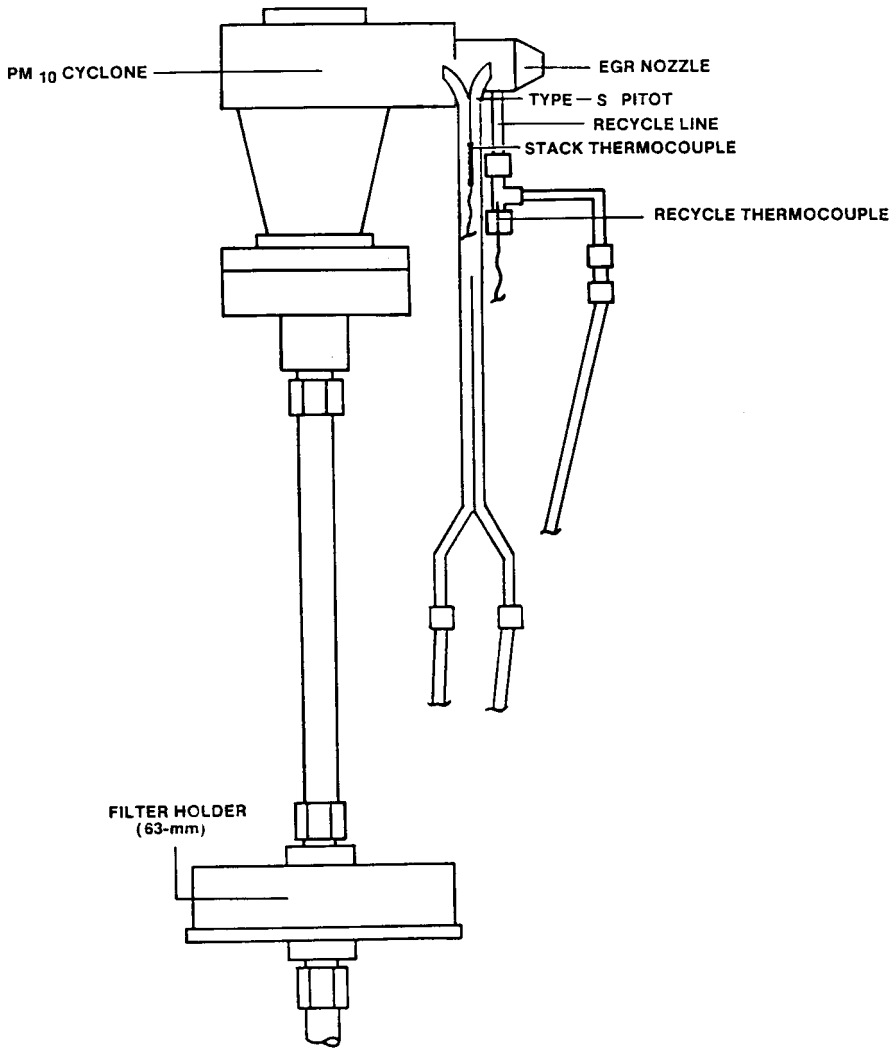

Figure 3. EGR PM_{10} cyclone sampling device.

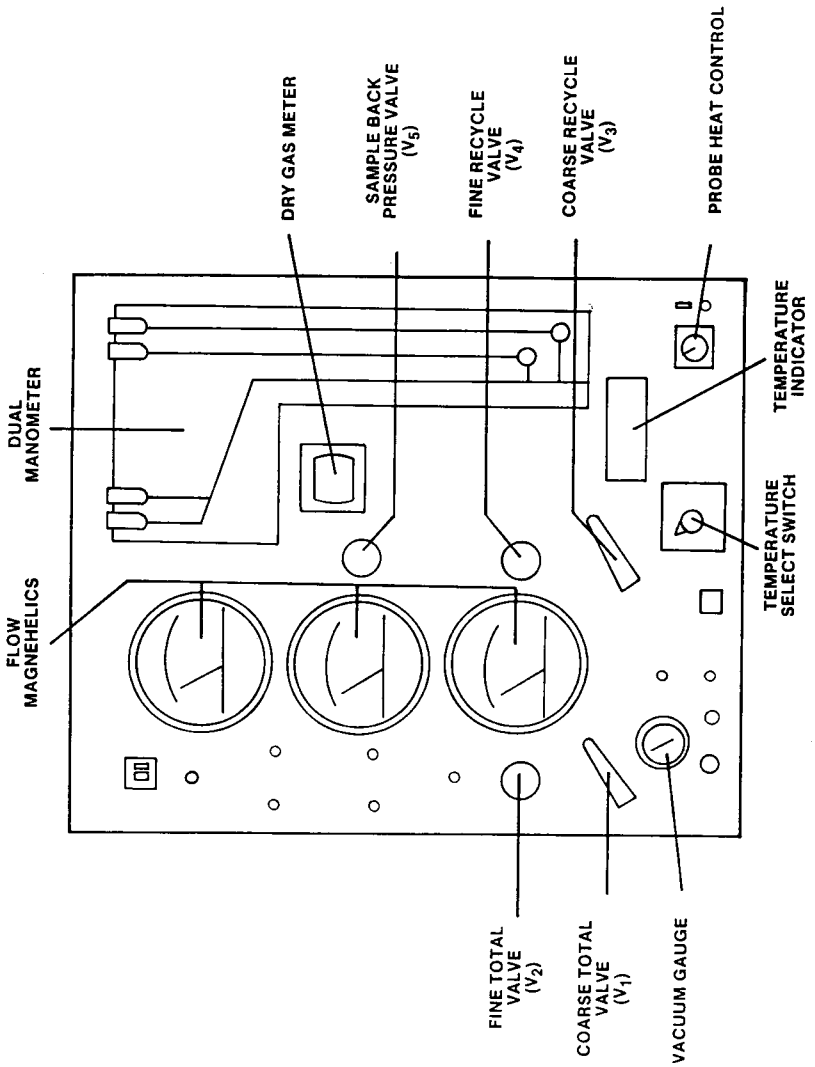

Figure 4. Example EGR control module (front view) showing principle components.

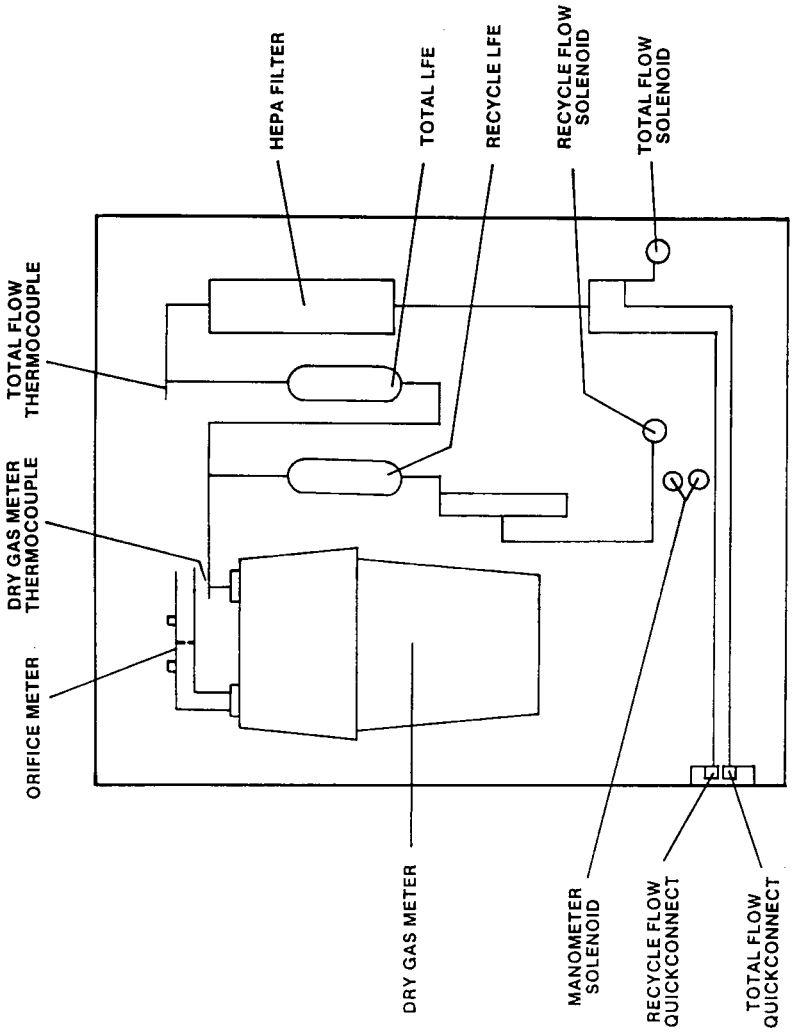

Figure 5. Example EGR control module (rear view) showing principle components.

EXAMPLE EMISSION GAS RECYCLE SETUP SHEET

VERSION 3.1 MAY 1986

TEST I.D.: SAMPLE SETUP
RUN DATE: 11/24/86
LOCATION: SOURCE SIM
OPERATOR(S): RH JB
NOZZLE DIAMETER (IN): .25
STACK CONDITIONS:
AVERAGE TEMPERATURE (F): 200.0
AVERAGE VELOCITY (FT/SEC): 15.0
AMBIENT PRESSURE (IN HG): 29.92
STACK PRESSURE (IN H_{20}): .10
GAS COMPOSITION:
H_{20}=10.0% .....MD=28.84
O_2=20.9% .....MW=27.75
CO_2=.0% .....(LB/LB MOLE)

TARGET PRESSURE DROPS

	TEMPERATURE (F)							
DP(PTO) ..	150	161	172	183	194	206	217	228
0.026	SAMPLE	.49	.49	.48	.47	.46	.45	.45
	TOTAL	1.90	1.90	1.91	1.92	1.92	1.92	1.93
	RECYCLE	2.89	2.92	2.94	2.97	3.00	3.02	3.05
	% RCL	61%	61%	62%	62%	63%	63%	63%
.031	.58	.56	.55	.55	.55	.54	.53	.52
	1.88	1.89	1.89	1.90	1.91	1.91	1.91	1.92
	2.71	2.74	2.77	2.80	2.82	2.85	2.88	2.90
	57%	57%	58%	58%	59%	59%	60%	60%
.035	.67	.65	.64	.63	.62	.61	.670	.59
	1.88	1.88	1.89	1.89	1.90	1.90	1.91	1.91
	2.57	2.60	2.63	2.66	2.69	2.72	2.74	2.74
	54%	55%	55%	56%	56%	57%	57%	57%
.039	.75	.74	.72	.71	.70	.69	.67	.66
	1.87	1.88	1.88	1.89	1.89	1.90	1.90	1.91
	2.44	2.47	2.50	2.53	2.56	2.59	2.62	2.65
	51%	52%	52%	53%	53%	54%	54%	55%

Figure 6. Example EGR setup sheet.

Barometric pressure, P_{bar}, in. Hg. = _____
Stack static pressure, P_g, in. H_2 O. = _____
Average stack temperature, t_s, °F. = _____
Meter temperature, t_m, °F. = _____
Gas analysis:
%CO_2 ..... = _____
%O_2 ..... = _____
%N_2+%CO ..... = _____
Fraction moisture content, B_{ws}. = _____
Calibration data:
Nozzle diameter, D_n in. = _____
Pitot coefficient, C_p. = _____

$\Delta H_@$, in. H_2O ..... = _____
Molecular weight of stack gas, dry basis:
M_d=0.44 (%CO_2)+0.32 (%O_2)+0.28 (%N_2+%CO) = _____ lb/lb mole
Molecular weight of stack gas, wet basis:
$M_w=M_d(1-B_{ws})+18B_{ws}$. = _____ lb/lb mole
Absolute stack pressure:
$P_s=P_{bar}+(P_g/13.6)$ = _____ in. Hg

$$K = 846.72\, D_n^4\, \Delta H_@\, C_p^2\, (1\text{-}B_{ws})^2\, \frac{M_d\,(t_m+460)\,P_s}{M_w\,(t_s+460)\,P_{bar}} = ____$$

Desired meter orifice pressure (ΔH) for velocity head of stack gas (Δp):

$$\Delta H = K\,\Delta p = ____ \text{ in. } H_2O$$

Figure 7. Example worksheet 1, meter orifice pressure head calculation.

Barometric pressure, P_{bar}, in. Hg. = _____
Absolute stack pressure, P_s, in. Hg. = _____
Average stack temperature, T_s, °R. = _____
Meter temperature, T_m, °R. = _____
Molecular weight of stack gas, wet basis, M_d lb/lb mole. = _____
Pressure upstream of LFE, in. Hg. = 0.6
Gas analysis:
$\%O_2$ ..... = _____
Fraction moisture content, B_{ws}. = _____
Calibration data:
Nozzle diameter, D_n, in = _____
Pitot coefficient, C_p ... = _____
Total LFE calibration constant, X_t. = _____
Total LFE calibration constant, T_t. = _____
Absolute pressure upstream of LFE:
$P_{LFE}=P_{bar}+0.6$ ..... = _____ in. Hg
Viscosity of gas in total LFE:
μ**LFE**=152.418+0.2552 T_m+3.2355×10^{-5} T_m2+0.53147 ($\%O_2$). = _____
Viscosity of dry stack gas:
μ**d**=152.418+0.2552 T_s+3.2355×10^{-5} T_s2+0.53147 ($\%O_2$). = _____

Constants:

$$K_1 = 1.5752\times10^{-5}\frac{\mu_{LFE}T_m P_s^{0.7051}\mu_d}{P_{LFE}M_d^{0.2949}T_s^{0.07051}} = ____$$

$$K_2 = 0.1539\frac{\mu_{LFE}T_m D_n^2 C_p}{P_{LFE}}\left[\frac{P_s}{T_s}\right]^{\frac{1}{2}}$$

$$K_3 = \frac{B_{ws}\mu_d\left[1-0.2949\left(1-18/M_d\right)\right]+74.143B_{ws}\left(1-B_{ws}\right)}{\mu_d - 74.143B_{ws}} = ____$$

$$A_1 = \frac{K_1}{X_t} - \frac{\mu_{LFE}Y_t}{180.1X_t} = ____$$

$$B_1 = \frac{K_2K_3}{\left(M_w\right)^{\frac{1}{2}}X_t} = ____$$

Total LFE pressure head:

$$\Delta p_t = A_1 - B_1(\Delta p)^{\frac{1}{2}} = ____\ \text{in.}H_2O$$

Figure 8. Example worksheet 1, meter orifice pressure head calculation.

Barometric pressure, P_{bar}, in. Hg. = _____
Absolute stack pressure, P_s, in. Hg. = _____
Average stack temperature, T_s, °R. = _____
Meter temperature, T_m, °R. = _____
Molecular weight of stack gas, dry basis, M_d lb/lb mole. = _____
Viscosity of LFE gasμ**LFE,**poise. = _____
Absolute pressure upstream of LFE, P_{PLE}in. Hg. = _____
Calibration data:.
Nozzle diameter, D_n, in = _____
Pitot coefficient, C_p ... = _____

Recycle LFE calibration constant, X_t = _____

Recycle LFE calibration constant, Y_t = _____

$$K_1 = 1.5752 \times 10^{-5} \frac{\mu_{LFE} T_m P_s^{0.7051} \mu_d}{P_{LFE} M_d^{0.2949} T_s^{0.7051}} = ____$$

$$K_2 = 0.1539 \frac{M_{LFE} T_m D_n^2 \ C_p}{P_{LFE}} \left[\frac{P_s}{T_s} \right]^{\frac{1}{2}}$$

$$K_4 = \frac{\mu_d}{M_W^{0.2051} \ M_d^{0.2949} \left(\mu_d - 74.143 \ B_{ws} \right)} = _____$$

$$A_2 = \frac{K_1}{X_r} - \frac{\mu_{LFE} \ Y_r}{180.1 \ X_r} = _____$$

$$B_2 = \frac{K_4 K_2}{X_r} = _____$$

Pressure head for recycle LFE:

$$\Delta P_r = A_2 - B_2 (\Delta p)^{\frac{1}{2}} = ____ \text{ in. } H_2O$$

Figure 9. Example worksheet 3, recycle LFE pressure head.

Run Code	Date	Stack Temperature (°F)	Gas Composition % CO_2 % O_2 % CO
Sampler ID	Start Time	Stack Static Pressure (in. H_2O)	Moisture Content
Filter ID	End Time	Ambient Temperature (°F)	
Sampler Orientation	Sampling Duration (min)	Ambient Pressure (in. Hg)	
Sampling Location	DGM (initial)	Gas Velocity	Pitot Leak Check (Pos) (Neg)
Nozzle Diameter-ID (in.)	DGM (final)	System, Leak Check (≥ 15 in. Hg)	Notes
Operator (s)	Sample Volume (ft^3)		
Dual Manometer Leveled and Zeroed?			
Magnehelics Zeroed?			

Run Time	Port No / Trav. Pt.	ΔP Pitot	ΔH Sample	DGM Volume	ΔP Total	P Inlet	ΔP Recycle	T_1 Stack	T_2 Recycle	T_3 Probe	T_4 LFE	T_5 DGM

Figure 10. Example EGR Procedure data sheet.

Plant _____
Date _____
Run no. _____
Filter no. _____
Amount liquid lost during transport _____
Acetone blank volume, ml _____
Acetone wash volume, ml (2)———(3) _____
Acetone blank conc., mg/mg (Equation 5–4, Method 5) _____
Acetone wash blank, mg (Equation 5–5, Method 5) _____

Container number	Weight of particulate matter, mg		
	Final weight	Tare weight	Weight gain
1	.....	.....	.....
3	.....	.....	.....
Total	.....	.....	.....
Less acetone blank	.....	.....	.....
Weight of PM_{10}	.....	.....	.....
2	.....	.....	.....
Less acetone blank	.....	.....	.....

Container number	Weight of particulate matter, mg		
	Final weight	Tare weight	Weight gain
Total particulate weight	.....	.....	.....

Figure 11. EGR method analysis sheet.

Cyclone Interior Dimensions

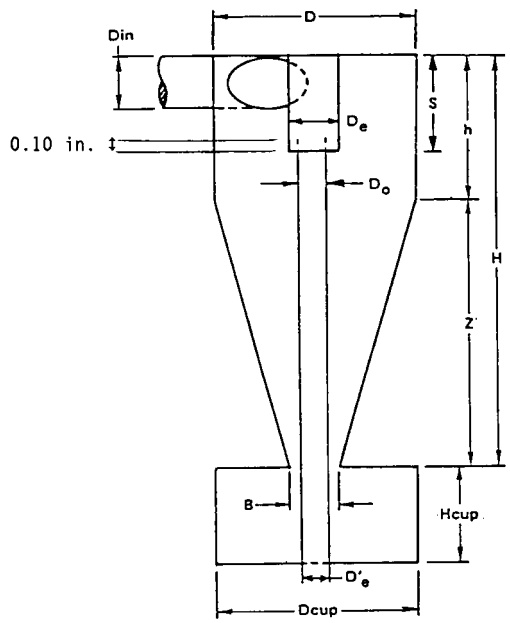

	Dimensions (±0.02 cm, ±0.01 in.)											
	Din	D	De	B	H	h	Z	S	Hcup	Dcup	D'_e	D_o
cm	1.27	4.47	1.50	1.88	6.95	2.24	4.71	1.57	2.25	4.45	1.02	1.24
inches	0.50	1.76	0.59	0.74	2.74	0.88	1.85	0.62	0.89	1.75	0.40	0.49

Figure 12. Cyclone design specifications.

TABLE 1—PERFORMANCE SPECIFICATIONS FOR SOURCE PM_{10} CYCLONES AND NOZZLE COMBINATIONS

Parameter	Units	Specification
1. Collection efficiency.	Percent	Such that collection efficiency falls within envelope specified by Section 5.7.6 and Figure 13.
2. Cyclone cut size (D_{50}).	µm	10±1 µm aerodynamic diameter.

TABLE 2—PARTICLE SIZES AND NOMINAL GAS VELOCITIES FOR EFFICIENCY

Particle size (µm)[a]	Target gas velocities (m/sec)		
	7±1.0	15±1.5	25±2.5
5±0.5			
7±0.5			
10±0.5			
14±1.0			
20±1.0			

(a) Mass median aerodynamic diameter.

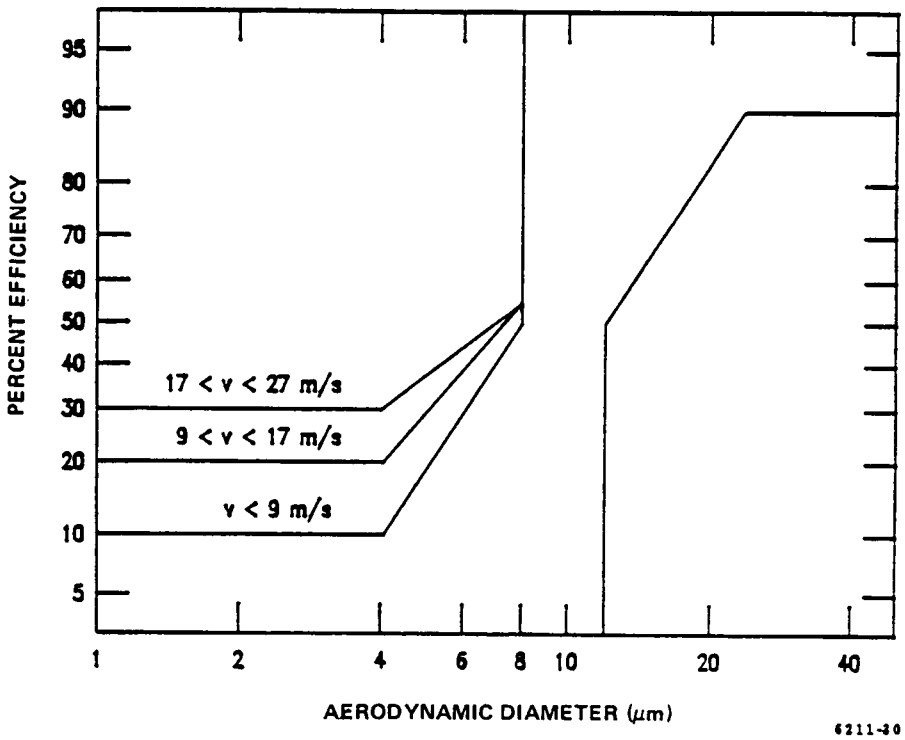

Figure 13. Efficiency envelope for the PM_{10} cyclone.

EMISSION GAS RECYCLE, DATA REDUCTION, VERSION 3.4 MAY 1986

Test ID. Code: Chapel Hill 2.
Test Location: Baghouse Outlet.
Test Site: Chapel Hill.
Test Date: 10/20/86.
Operators(s): JB RH MH.

Entered Run Data

Temperatures:
T(STK) ..... 251.0 F
T(RCL) ..... 259.0 F
T(LFE) ..... 81.0 F
T(DGM) ..... 76.0 F
System Pressures:
DH(ORI) ..... 1.18 INWG
DP(TOT) ..... 1.91 INWG

P(INL)	12.15 INWG
DP(RCL)	2.21 INWG
DP(PTO)	0.06 INWG
Miscellanea:	
P(BAR)	29.99 INWG
DP(STK)	0.10 INWG
V(DGM)	13.744 FT3
TIME	60.00 MIN
% CO2	8.00
% O2	20.00
NOZ (IN)	0.2500
Water Content:	
Estimate	0.0%
or	
Condenser	7.0 ML
Column	0.0 GM
Raw Masses:	
Cyclone 1	21.7 MG
Filter	11.7 MG
Impinger Residue	0.0 MG
Blank Values:	
CYC Rinse	0.0 MG
Filter Holder Rinse	0.0 MG
Filter Blank	0.0 MG
Impinger Rinse	0.0 MG
Calibration Values:	
CP(PITOT)	0.840
DH@(ORI)	10.980
M(TOT LFE)	0.2298
B(TOT LFE)	−.0058
M(RCL LFE)	0.0948
B(RCL LFE)	−.0007
DGM GAMMA	0.9940

Reduced Data

Stack Velocity (FT/SEC)	15.95
Stack Gas Moisture (%)	2.4
Sample Flow Rate (ACFM)	0.3104
Total Flow Rate (ACFM)	0.5819
Recycle Flow Rate (ACFM)	0.2760
Percent Recycle	46.7
Isokinetic Ratio (%)	95.1

	(Particulate)		(MG/DNCM)	(GR/ACF)	(GR/DCF)	(LB/DSCF) (X 1E6)
	(UM)	(% <)				
Cyclone 1	10.15	35.8	56.6	0.01794	0.02470	3.53701
Backup Filter	.....	.....	30.5	0.00968	0.01332	1.907
Particulate Total	.....	.....	87.2	0.02762	0.03802	5.444

Note: Figure 14. Example inputs and outputs of the EGR reduction program.

METHOD 201A—DETERMINATION OF PM_{10} EMISSIONS (CONSTANT SAMPLING RATE PROCEDURE)

1. Applicability and Principle

1.1 Applicability. This method applies to the in-stack measurement of particulate matter (PM) emissions equal to or less than an aerodynamic diameter of nominally 10 (PM_{10}) from stationary sources. The EPA recognizes that condensible emissions not collected by an in-stack method are also $PM_{10,}$ and that emissions that contribute to ambient, PM_{10} levels are the sum of condensible emissions and emissions measured by an in-stack PM_{10} method, such as this method or Method 201. Therefore, for establishing source contributions to ambient levels of $PM_{10,}$ such as for emission inventory purposes, EPA suggests that source PM_{10} measurement include both in-stack PM_{10} and condensible emissions. Condensible emissions may be measured by an impinger analysis in combination with this method.

1.2 Principle. A gas sample is extracted at a constant flow rate through an in-stack sizing device, which separates PM greater than $PM_{10.}$ Variations from isokinetic sampling conditions are maintained within well-defined limits. The particulate mass is determined gravimetrically after removal of uncombined water.

2. Apparatus

NOTE: Methods cited in this method are part of 40 CFR part 60, appendix A.

2.1 Sampling Train. A schematic of the Method 201A sampling train is shown in Figure 1 of this method. With the exception of the PM_{10} sizing device and in-stack filter, this train is the same as an EPA Method 17 train.

2.1.1 Nozzle. Stainless steel (316 or equivalent) with a sharp tapered leading edge. Eleven nozzles that meet the design specification in Figure 2 of this method are recommended. A larger number of nozzles with small nozzle increments increase the likelihood that a single nozzle can be used for the entire traverse. If the nozzles do not meet the design specifications in Figure 2 of this method, then the nozzles must meet the criteria in Section 5.2 of this method.

2.1.2 PM_{10} Sizer. Stainless steel (316 or equivalent), capable of determining the PM_{10} fraction. The sizing device shall be either a cyclone that meets the specifications in Section 5.2 of this method or a cascade impactor that has been calibrated using the procedure in Section 5.4 of this method.

2.1.3 Filter Holder. 63-mm, stainless steel. An Andersen filter, part number SE274, has been found to be acceptable for the in-stack filter. NOTE: Mention of trade names or specific products does not constitute endorsement by the Environmental Protection Agency.

2.1.4 Pitot Tube. Same as in Method 5, Section 2.1.3. The pitot lines shall be made of heat resistant tubing and attached to the probe with stainless steel fittings.

2.1.5 Probe Liner. Optional, same as in Method 5, Section 2.1.2.

2.1.6 Differential Pressure Gauge, Condenser, Metering System, Barometer, and Gas Density Determination Equipment. Same as in Method 5, Sections 2.1.4, and 2.1.7 through 2.1.10, respectively.

2.2 Sample Recovery.

2.2.1 Nozzle, Sizing Device, Probe, and Filter Holder Brushes. Nylon bristle brushes with stainless steel wire shafts and handles, properly sized and shaped for cleaning the nozzle, sizing device, probe or probe liner, and filter holders.

2.2.2 Wash Bottles, Glass Sample Storage Containers, Petri Dishes, Graduated Cylinder and Balance, Plastic Storage Containers, Funnel and Rubber Policeman, and Funnel. Same as in Method 5, Sections 2.2.2 through 2.2.8, respectively.

2.3 Analysis. Same as in Method 5, Section 2.3.

3. Reagents

The reagents for sampling, sample recovery, and analysis are the same as that specified in Method 5, Sections 3.1, 3.2, and 3.3, respectively.

4. Procedure

4.1 Sampling. The complexity of this method is such that, in order to obtain reliable results, testers should be trained and experienced with the test procedures.

4.1.1 Pretest Preparation. Same as in Method 5, Section 4.1.1.

4.1.2 Preliminary Determinations. Same as in Method 5, Section 4.1.2, except use the directions on nozzle size selection and sampling time in this method. Use of any nozzle greater than 0.16 in. in diameter requires a sampling port diameter of 6 inches. Also, the required maximum number of traverse points at any location shall be 12.

4.1.2.1 The sizing device must be in-stack or maintained at stack temperature during sampling. The blockage effect of the CSR sampling assembly will be minimal if the cross-sectional area of the sampling assembly is 3 percent or less of the cross-sectional area of the duct. If the cross-sectional area of the assembly is greater than 3 percent of the cross-sectional area of the duct, then either determine the pitot coefficient at sampling conditions or use a standard pitot with a known coefficient in a configuration with the CSR sampling assembly such that flow disturbances are minimized.

4.1.2.2 The setup calculations can be performed by using the following procedures.

4.1.2.2.1 In order to maintain a cut size of 10 μm in the sizing device, the flow rate through the sizing device must be maintained at a constant, discrete value during the run. If the sizing device is a cyclone that meets the design specifications in Figure 3 of this method, use the equations in Figure 4 of this method to calculate three orifice heads (ΔH): one at the average stack temperature, and the other two at temperatures ±28 °C (±50 °F) of the average stack temperature. Use ΔH calculated at the average stack temperature as the pressure head for the sample flow rate as long as the stack temperature during the run is within 28 °C (50 °F) of the average stack temperature. If the stack temperature varies by more than 28 °C (50 °F), then use the appropriate ΔH.

4.1.2.2.2 If the sizing device is a cyclone that does not meet the design specifications in Figure 3 of this method, use the equations in Figure 4 of this method, except use the procedures in Section 5.3 of this method to determine Q_s, the correct cyclone flow rate for a 10 μm size.

4.1.2.2.3 To select a nozzle, use the equations in Figure 5 of this method to calculate Δp_{min} and Δp_{max} for each nozzle at all three temperatures. If the sizing device is a cyclone that does not meet the design specifications in Figure 3 of this method, the example worksheets can be used.

4.1.2.2.4 Correct the Method 2 pitot readings to Method 201A pitot readings by multiplying the Method 2 pitot readings by the square of a ratio of the Method 201A pitot coefficient to the Method 2 pitot coefficient. Select the nozzle for which Δp_{min} and Δp_{max} bracket all of the corrected Method 2 pitot readings. If more than one nozzle meets this requirement, select the nozzle giving the greatest symmetry. Note that if the expected pitot reading for one or more points is near a limit for a chosen nozzle, it may be outside the limits at the time of the run.

4.1.2.2.5 Vary the dwell time, or sampling time, at each traverse point proportionately with the point velocity. Use the equations in Figure 6 of this method to calculate the dwell time at the first point and at each subsequent point. It is recommended that the number of minutes sampled at each point be rounded to the nearest 15 seconds.

4.1.3 Preparation of Collection Train. Same as in Method 5, Section 4.1.3, except omit directions about a glass cyclone.

4.1.4 Leak-Check Procedure. The sizing device is removed before the post-test leak-check to prevent any disturbance of the collected sample prior to analysis.

4.1.4.1 Pretest Leak-Check. A pretest leak-check of the entire sampling train, including the sizing device, is required. Use the leak-check procedure in Method 5, Section 4.1.4.1 to conduct a pretest leak-check.

4.1.4.2 Leak-Checks During Sample Run. Same as in Method 5, Section 4.1.4.1.

4.1.4.3 Post-Test Leak-Check. A leak-check is required at the conclusion of each sampling run. Remove the cyclone before the leak-check to prevent the vacuum created by the cooling of the probe from disturbing the collected sample and use the procedure in Method 5, Section 4.1.4.3 to conduct a post-test leak-check.

4.1.5 Method 201A Train Operation. Same as in Method 5, Section 4.1.5, except use the procedures in this section for isokinetic sampling and flow rate adjustment. Maintain the flow rate calculated in Section 4.1.2.2.1 of this method throughout the run provided the stack temperature is within 28 °C (50 °F) of the temperature used to calculate ΔH. If stack temperatures vary by more than 28 °C (50 °F), use the appropriate ΔH value calculated in Section 4.1.2.2.1 of this method. Calculate the dwell time at each traverse point as in Figure 6 of this method.

4.2 Sample Recovery. If a cascade impactor is used, use the manufacturer's recommended procedures for sample recovery. If a cyclone is used, use the same sample recovery as that in Method 5, Section 4.2, except an increased number of sample recovery containers is required.

4.2.1 *Container Number 1* (In-Stack Filter). The recovery shall be the same as that for Container Number 1 in Method 5, Section 4.2.

4.2.3 *Container Number 2* (Cyclone or Large PM Catch). This step is optional. The anisokinetic error for the cyclone PM is theoretically larger than the error for the PM_{10} catch. Therefore, adding all the fractions to get a total PM catch is not as accurate as Method 5 or Method 201. Disassemble the cyclone and remove the nozzle to recover the large PM catch. Quantitatively recover the PM from the interior surfaces of the nozzle and cyclone, excluding the ''turn around'' cup and the interior surfaces of the exit tube. The recovery shall be the same as that for Container Number 2 in Method 5, Section 4.2.

4.2.4 *Container Number 3* (PM_{10}). Quantitatively recover the PM from all of the surfaces from the cyclone exit to the front half of the in-stack filter holder, including the ''turn around'' cup inside the cyclone and the interior surfaces of the exit tube. The recovery shall be the same as that for Container Number 2 in Method 5, Section 4.2.

4.2.6 *Container Number 4* (Silica Gel). The recovery shall be the same as that for Container Number 3 in Method 5, Section 4.2.

4.2.7 *Impinger Water.* Same as in Method 5, Section 4.2, under ''Impinger Water.''

4.3 Analysis. Same as in Method 5, Section 4.3, except handle Method 201A Container Number 1 like Container Number 1, Method 201A Container Numbers 2 and 3 like Container Number 2, and Method 201A Container Number 4 like Container Number 3. Use Figure 7 of this method to record the weights of PM collected. Use Figure 5–3 in Method 5, Section 4.3, to record the volume of water collected.

4.4 Quality Control Procedures. Same as in Method 5, Section 4.4.

4.5 PM_{10} Emission Calculation and Acceptability of Results. Use the procedures in section 6 to calculate PM_{10} emissions and the criteria in section 6.3.5 to determine the acceptability of the results.

5. Calibration

Maintain an accurate laboratory log of all calibrations.

5.1 Probe Nozzle, Pitot Tube, Metering System, Probe Heater Calibration, Temperature Gauges, Leak-check of Metering System, and Barometer. Same as in Method 5, Section 5.1 through 5.7, respectively.

5.2 Probe Cyclone and Nozzle Combinations. The probe cyclone and nozzle combinations need not be calibrated if both meet design specifications in Figures 2 and 3 of this method. If the nozzles do not meet design specifications, then test the cyclone and nozzle combinations for conformity with performance specifications (PS's) in Table 1 of this method. If the cyclone does not meet design specifications, then the cylcone and nozzle combination shall conform to the PS's and calibrate the cyclone to determine the relationship between flow rate, gas viscosity, and gas density. Use the procedures in Section 5.2 of this method to conduct PS tests and the procedures in Section 5.3 of this method to calibrate the cyclone. The purpose of the PS tests are to conform that the cyclone and nozzle combination has the desired sharpness of cut. Conduct the PS tests in a wind tunnel described in Section 5.2.1 of this method and particle generation system described in Section 5.2.2 of this method. Use five particle sizes and three wind velocities as listed in Table 2 of this method. A minimum of three replicate measurements of collection efficiency shall be performed for each of the 15 conditions listed, for a minimum of 45 measurements.

5.2.1 Wind Tunnel. Perform the calibration and PS tests in a wind tunnel (or equivalent test apparatus) capable of establishing and maintaining the required gas stream velocities within 10 percent.

5.2.2 Particle Generation System. The particle generation system shall be capable of producing solid monodispersed dye particles with the mass median aerodynamic diameters specified in Table 2 of this method. Perform the particle size distribution verification on an integrated sample obtained during the sampling period of each test. An acceptable alternative is to verify the size distribution of samples obtained before and after each test, with both samples required to meet the diameter and monodispersity requirements for an acceptable test run.

5.2.2.1 Establish the size of the solid dye particles delivered to the test section of the wind tunnel by using the operating parameters of the particle generation system, and verify them during the tests by microscopic examination of samples of the particles collected on a membrane filter. The particle size, as established by the operating parameters of the generation system, shall be within the tolerance specified in Table 2 of this method. The precision of the particle size verification technique shall be at least ±0.5, µm, and particle size determined by the verification technique shall not differ by more than 10 percent from that established by the operating parameters of the particle generation system.

5.2.2.2 Certify the monodispersity of the particles for each test either by microscopic inspection of collected particles on filters or by other suitable monitoring techniques such as an optical particle counter followed by a multichannel pulse height analyzer. If the proportion of multiplets and satellites in an aerosol exceeds 10 percent by mass, the particle generation system is unacceptable for the purpose of this test. Multiplets are particles that are agglomerated, and satellites are particles that are smaller than the specified size range.

5.2.3 Schematic Drawings. Schematic drawings of the wind tunnel and blower system and other information showing complete procedural details of the test atmosphere generation, verification, and delivery techniques shall be furnished with calibration data to the reviewing agency.

5.2.4 Flow Measurements. Measure the cyclone air flow rates with a dry gas meter and a stopwatch, or a calibrated orifice system capable of measuring flow rates to within 2 percent.

5.2.5 Performance Specification Procedure. Establish test particle generator operation and verify particle size microscopically. If monodisperity is to be verified by measurements at the beginning and the end of the run rather than by an integrated sample, these measurements may be made at this time.

5.2.5.1 The cyclone cut size, or $D_{50,}$ of a cyclone is defined here as the particle size having a 50 percent probability of penetration. Determine the cyclone flow rate at which D_{50} is 10 µm. A suggested procedure is to vary the cyclone flow rate while keeping a constant particle size of 10 µm. Measure the PM collected in the cyclone (m_c), the exit tube (m_t), and the filter (m_f). Calculate cyclone efficiency (E_c) for each flow rate as follows:

$$E_c = \frac{m_c}{(m_c + m_t + m_{f)}} \times 100$$

5.2.5.2. Do three replicates and calculate the average cyclone efficiency [$E_{c(avg)}$] as follows:

$$E_{c(avg)} = \left(E_1 + E_2 + E_3\right)/3$$

Where $E_{1,}$ $E_{2,}$ and E_3 are replicate measurements of E_c.

5.2.5.3 Calculate the standard deviation (σ) for the replicate measurements of E_c as follows:

$$\sigma = \left[\frac{(E_1{}^2 + E_2{}^2 + E_3{}^2) - \frac{(E_1 + E_2 + E_3)^2}{3}}{2} \right]^{\frac{1}{2}}$$

If σ exceeds 0.10, repeat the replicated runs.

5.2.5.4 Measure the overall efficiency of the cyclone and nozzle, $E_{o,}$ at the particle sizes and nominal gas velocities in Table 2 of this method using the following procedure.

5.2.5.5 Set the air velocity and particle size from one of the conditions in Table 2 of this method. Establish isokinetic sampling conditions and the correct flow rate in the cyclone (obtained by procedures in this section) such that the D_{50} is 10 µm. Sample long enough to obtain ±5 percent precision on total collected mass as determined by the precision and the sensitivity of measuring technique. Determine separately the nozzle catch (m_n), cyclone catch (m_c), cyclone exit tube (M_t), and collection filter catch (m_f) for each particle size and nominal gas velocity in Table 2 of this method. Calculate overall efficiency (E_o) as follows:

$$E_o = \frac{(m_n + m_c)}{(m_n + m_c + m_t m_f)} \times 100$$

5.2.5.6 Do three replicates for each combination of gas velocity and particle size in Table 2 of this method. Use the equation

below to calculate the average overall efficiency [$E_{o(avg)}$] for each combination following the procedures described in this section for determining efficiency.

$$E_{o(avg)} = (E_1 + E_2 + E_3)/3$$

Where E_1, E_2, and E_3 are replicate measurements of E_o.

5.2.5.7 Use the formula in Section 5.2.5.3 to calculate σ for the replicate measurements. If σ exceeds 0.10 or if the particle sizes and nominal gas velocities are not within the limits specified in Table 2 of this method, repeat the replicate runs.

5.2.6 Criteria for Acceptance. For each of the three gas stream velocities, plot the $E_{o(avg)}$ as a function of particle size on Figure 8 of this method. Draw smooth curves through all particle sizes. $E_{o(avg)}$ shall be within the banded region for all sizes, and the $E_{c(avg)}$ shall be 50±0.5 percent at 10 µm.

5.3 Cyclone Calibration Procedure. The purpose of this procedure is to develop the relationship between flow rate, gas viscosity, gas density, and D_{50}.

5.3.1 Calculate Cyclone Flow Rate. Determine flow rates and D_{50}'s for three different particle sizes between 5 µm and 15 µm, one of which shall be 10 µm. All sizes must be determined within 0.5 µm. For each size, use a different temperature within 60 °C (108 °F) of the temperature at which the cyclone is to be used and conduct triplicate runs. A suggested procedure is to keep the particle size constant and vary the flow rate.

5.3.1.1 On log-log graph paper, plot the Reynolds number (Re) on the abscissa, and the square root of the Stokes 50 number [$(Stk_{50})^{12}$] on the ordinate for each temperature. Use the following equations to compute both values:

$$Re = \frac{4\rho Q_{cyc}}{d_{cyc}\pi\mu_s}$$

$$(Stk_{50})^{\frac{1}{2}} = \left[\frac{4Q_{cyc}(D_{50})^2}{(9\pi\mu_s)^3(d_{cyc})^3}\right]^{\frac{1}{2}}$$

where:

Q_{cyc} = Cyclone flow rate, cm^3/sec.
ρ = Gas density, g/cm^3.
d_{cyc} = Diameter of cyclone inlet, cm.
μs = Viscosity of stack gas, micropoise.
D_{50} = Aerodynamic diameter of a particle having a 50 percent probability of penetration, cm.

5.3.1.2 Use a linear regression analysis to determine the slope (m) and the Y-intercept (b). Use the following formula to determine Q, the cyclone flow rate required for a cut size of 10 µm.

$$Q_s = \frac{\pi\mu_s}{4}\left[(3000)(K_1) - b\right]^{-(0.5-m)}\left[\frac{T_s}{M_w P_s}\right]^{m/(m-0.5)} d^{(m-1.5)/(m-0.5)}$$

where:

m = Slope of the calibration line.
b = y-intercept of the calibration line.
Q_s = Cyclone flow rate for a cut size of 10 µm, cm^3/sec.
d = Diameter of nozzle, cm.
T_s = Stack gas temperature, •R.
P_s = Absolute stack pressure, in. Hg.
M_w = Wet molecular weight of the stack gas, lb/1b-mole.
$K_1 = 4.077\times10^{-3}$.

5.3.1.3 Refer to the Method 201A operators manual, entitled *Application Guide for Source PM_{10} Measurement with Constant Sampling Rate,* for directions in the use of this equation for Q in the setup calculations.

5.4 Cascade Impactor. The purpose of calibrating a cascade impactor is to determine the empirical constant (STK_{50}), which is specific to the impactor and which permits the accurate determination of the cut size of the impactor stages at field conditions. It is not necessary to calibrate each individual impactor. Once an impactor has been calibrated, the calibration data can be applied to other impactors of identical design.

5.4.1 Wind Tunnel. Same as in Section 5.2.1 of this method.

5.4.2 Particle Generation System. Same as in Section 5.2.2 of this method.

5.4.3 Hardware Configuration for Calibrations. An impaction stage constrains an aerosol to form circular or rectangular jets, which are directed toward a suitable substrate where the larger aerosol particles are collected. For calibration purposes, three stages of the cascade impactor shall be discussed and designated calibration stages 1, 2, and 3. The first calibration stage consists of the collection substrate of an impaction stage and all upstream surfaces up to and including the nozzle. This may include other preceding impactor stages. The second and

third calibration stages consist of each respective collection substrate and all upstream surfaces up to but excluding the collection substrate of the preceding calibration stage. This may include intervening impactor stages which are not designated as calibration stages. The cut size, or D_{50}, of the adjacent calibration stages shall differ by a factor of not less than 1.5 and not more than 2.0. For example, if the first calibration stage has a D_{50} of 12 µm, then the D_{50} of the downstream stage shall be between 6 and 8 µm.

5.4.3.1 It is expected, but not necessary, that the complete hardware assembly will be used in each of the sampling runs of the calibration and performance determinations. Only the first calibration stage must be tested under isokinetic sampling conditions. The second and third calibration stages must be calibrated with the collection substrate of the preceding calibration stage in place, so that gas flow patterns existing in field operation will be simulated.

5.4.3.2 Each of the PM_{10} stages should be calibrated with the type of collection substrate, viscid material (such as grease) or glass fiber, used in PM_{10} measurements. Note that most materials used as substrates at elevated temperatures are not viscid at normal laboratory conditions. The substrate material used for calibrations should minimize particle bounce, yet be viscous enough to withstand erosion or deformation by the impactor jets and not interfere with the procedure for measuring the collected PM.

5.4.4 Calibration Procedure. Establish test particle generator operation and verify particle size microscopically. If monodispersity is to be verified by measurements at the beginning and the end of the run rather than by an integrated sample, these measurements shall be made at this time. Measure in triplicate the PM collected by the calibration stage (m) and the PM on all surfaces downstream of the respective calibration stage (m') for all of the flow rates and particle size combinations shown in Table 2 of this method. Techniques of mass measurement may include the use of a dye and spectrophotometer. Particles on the upstream side of a jet plate shall be included with the substrate downstream, except agglomerates of particles, which shall be included with the preceding or upstream substrate. Use the following formula to calculate the collection efficiency (E) for each stage.

5.4.4.1 Use the formula in Section 5.2.5.3 of this method to calculate the standard deviation (σ) for the replicate measurements. If σ exceeds 0.10, repeat the replicate runs.

5.4.4.2 Use the following formula to calculate the average collection efficiency (E_{avg}) for each set of replicate measurements.

$$E_{avg}=(E_1+E_2+E_3)/3$$

where E_1, E_2, and E_3 are replicate measurements of E.

5.4.4.3 Use the following formula to calculate Stk for each E_{avg}.

$$Stk = \frac{D^2Q}{9\mu A d_j}$$

where:

D = Aerodynamic diameter of the test particle, cm $(g/cm^3)^{1/2}$.

Q = Gas flow rate through the calibration stage at inlet conditions, cm^3/sec.

µ = Gas viscosity, micropoise.

A = Total cross-sectional area of the jets of the calibration stage, cm^2.

d_j = Diameter of one jet of the calibration stage, cm.

5.4.4.4 Determine Stk_{50} for each calibration stage by plotting E_{avg} versus Stk on log-log paper. Stk_{50} is the Stk number at 50 percent efficiency. Note that particle bounce can cause efficiency to decrease at high values of Stk. Thus, 50 percent efficiency can occur at multiple values of Stk. The calibration data should clearly indicate the value of Stk_{50} for minimum particle bounce. Impactor efficiency versus Stk with minimal particle bounce is characterized by a monotonically increasing function with constant or increasing slope with increasing Stk.

5.4.4.5 The Stk_{50} of the first calibration stage can potentially decrease with decreasing nozzle size. Therefore, calibrations should be performed with enough nozzle sizes to provide a measured value within 25 percent of any nozzle size used in PM_{10} measurements.

5.4.5 Criteria For Acceptance. Plot E_{avg} for the first calibration stage versus the square root of the ratio of Stk to Stk_{50} on Figure 9 of this method. Draw a smooth curve through all of the points. The curve shall be within the banded region.

6. Calculations

Calculations are as specified in Method 5, sections 6.3 through 6.7, and 6.9 through 6.11, with the addition of the following:

6.1 Nomenclature.

B_{ws}=Moisture fraction of stack, by volume, dimensionless.

C_1=Viscosity constant, 51.12 micropoise for °K (51.05 micropoise for °R).

C_2=Viscosity constant, 0.372 micropoise/ °K (0.207 micropoise/°R).

C_3=Viscosity constant, 1.05×10^{-4} micropoise/ $°K^2$ (3.24×10^{-5} micropoise/$°R^2$).

C_4=Viscosity constant, 53.147 micropoise/ fraction O_2.

C_5=Viscosity constant, 74.143 micropoise/ fraction H_2O.

D_{50}=Diameter of particles having a 50 percent probability of penetration, µm.

f_o=Stack gas fraction O_2, by volume, dry basis.
K_1=0.3858 °K/mm Hg (17.64 °R/in. Hg).
M_w=Wet molecular weight of stack gas, g/g-mole (lb/lb-mole).
M_d=Dry molecular weight of stack gas, g/g-mole (1b/1b-mole).
P_{bar}=Barometric pressure at sampling site, mm Hg (in. Hg).
P_s=Absolute stack pressure, mm Hg (in. Hg).
Q_s=Total cyclone flow rate at wet cyclone conditions, m^3/min (ft^3/min).
$Q_{s(std)}$=Total cyclone flow rate at standard conditions, dscm/min (dscf/min).
T_m=Average absolute temperature of dry meter, °K (°R).
T_s=Average absolute stack gas temperature, °K (°R).
$V_{w(std)}$=Volume of water vapor in gas sample (standard conditions), scm (scf).
θ=Total sampling time, min.
μ_s=Viscosity of stack gas, micropoise.

6.2 Analysis of Cascade Impactor Data. Use the manufacturer's recommended procedures to analyze data from cascade impactors.

6.3 Analysis of Cyclone Data. Use the following procedures to analyze data from a single stage cyclone.

6.3.1 PM_{10} Weight. Determine the PM catch in the PM_{10} range from the sum of the weights obtained from Container Numbers 1 and 3 less the acetone blank.

6.3.2 Total PM Weight (optional). Determine the PM catch for greater than PM_{10} from the weight obtained from Container Number 2 less the acetone blank, and add it to the PM_{10} weight.

6.3.3 PM_{10} Fraction. Determine the PM_{10} fraction of the total particulate weight by dividing the PM_{10} particulate weight by the total particulate weight.

6.3.4 Aerodynamic Cut Size. Calculate the stack gas viscosity as follows:

$$\mu_s=C_1+C_2T_s+C_3T_s2+C_4f_{02}-C_5B_{ws}$$

6.3.4.1 The PM_{10} flow rate, at actual cyclone conditions, is calculated as follows:

$$Q_s=\frac{T_s}{K_1P_s}\left[Q_{s(std)}+\frac{V_{w(std)}}{\theta}\right]$$

6.3.4.2 Calculate the molecular weight on a wet basis of the stack gas as follows:

$$M_w=M_d(1-B_{ws})+18.0(B_{ws})$$

6.3.4.3 Calculate the actual D_{50} of the cyclone for the given conditions as follows:

$$D_{50}=\beta_1\left[\frac{T_s}{M_wP_s}\right]^{0.2091}\left[\frac{\mu_s}{Q_s}\right]^{0.7091}$$

where β**1**=0.027754 for metric units (0.15625 for English units).

6.3.5 Acceptable Results. The results are acceptable if two conditions are met. The first is that 9.0 μm ≤ D_{50} ≤ 11.0 μm. The second is that no sampling points are outside Δp_{min} and Δp_{max}, or that 80 percent ≤ I ≤ 120 percent and no more than one sampling point is outside Δp_{min} and Δp_{max}. If D_{50} is less than 9.0 μm, reject the results and repeat the test.

7. Bibliography

1. Same as Bibliography in Method 5.

2. McCain, J.D., J.W. Ragland, and A.D. Williamson. Recommended Methodology for the Determination of Particle Size Distributions in Ducted Sources, Final Report. Prepared for the California Air Resources Board by Southern Research Institute. May 1986.

3. Farthing, W.E., S.S. Dawes, A.D. Williamson, J.D. McCain, R.S. Martin, and J.W. Ragland. Development of Sampling Methods for Source PM_{10} Emissions. Southern Research Institute for the Environmental Protection Agency. April 1989. NTIS PB 89 190375, EPA/600/3–88–056.

4. *Application Guide for Source PM_{10} Measurement with Constant Sampling Rate*, EPA/600/3–88–057.

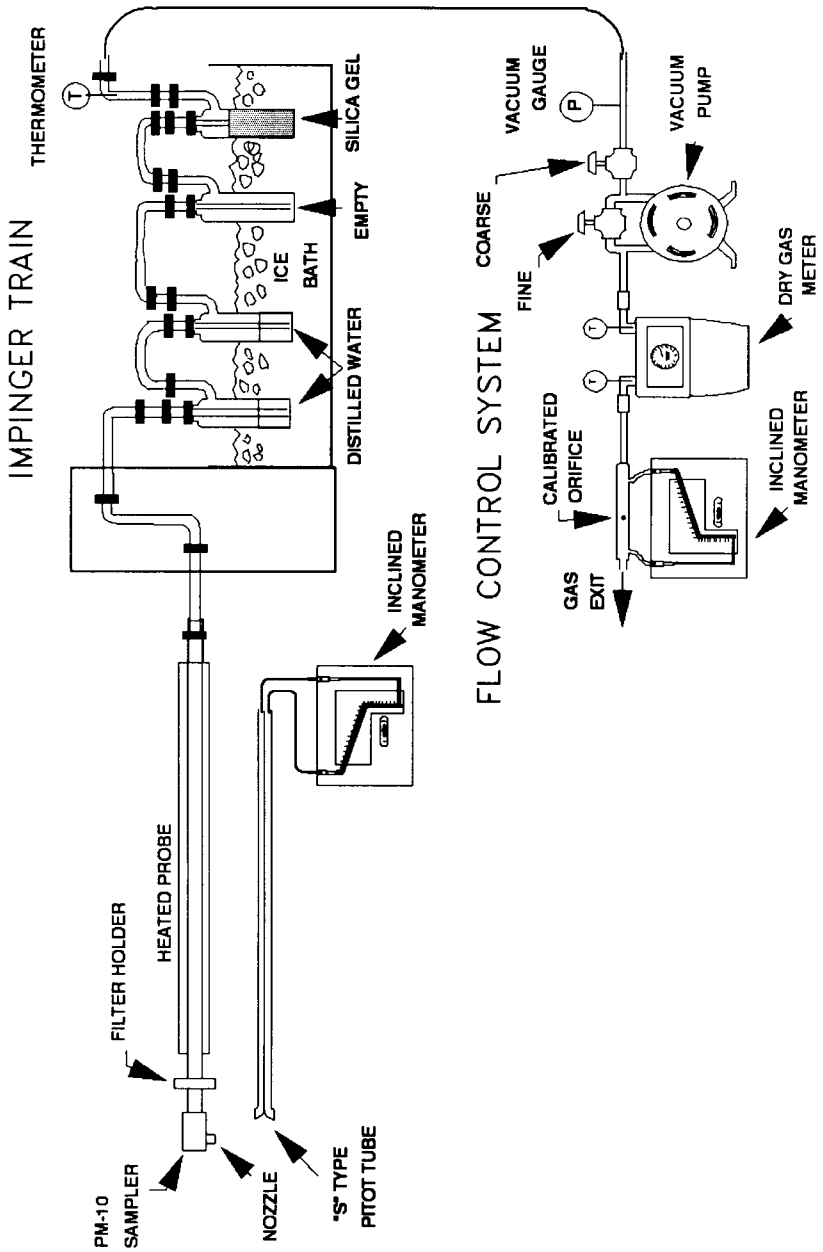

Figure 1. CSR Sampling Train

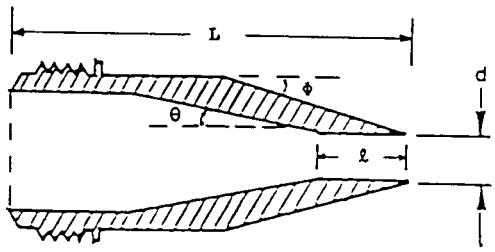

Nozzle Diameter (inches)	Cone Angle, θ (degrees)	Outside taper, ϕ (degrees)	Straight inlet length, ℓ (inches)	Total Length L (inches)
0.136	4	15	<0.05	2.653±0.05
0.150	4	15	<0.05	2.553±0.05
0.164	5	15	<0.05	1.970±0.05
0.180	6	15	<0.05	1.572±0.05
0.197	6	15	<0.05	1.491±0.05
0.215	6	15	<0.05	1.45 ±0.05
0.233	6	15	<0.05	1.45 ±0.05
0.264	5	15	<0.05	1.45 ±0.05
0.300	4	15	<0.05	1.48 ±0.05
0.342	4	15	<0.05	1.45 ±0.05
0.390	3	15	<0.05	1.45 ±0.05

Figure 2. Nozzle design specifications.

Cyclone Interior Dimensions

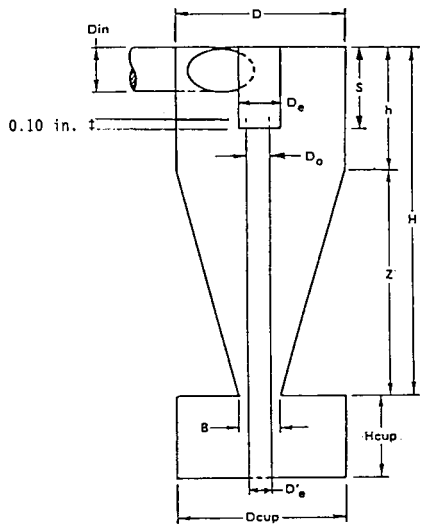

	Dimensions (±0.02 cm, ±0.01 in.)											
	Din	D	De	B	H	h	Z	S	Hcup	Dcup	D'_e	D_o
cm	1.27	4.47	1.50	1.88	6.95	2.24	4.71	1.57	2.25	4.45	1.02	1.24
inches	0.50	1.76	0.59	0.74	2.74	0.88	1.85	0.62	0.89	1.75	0.40	0.49

Figure 3. Cyclone design specifications.

Barometric pressure, P_{bar}, in. Hg= _____

Stack static pressure, P_g, in. H_2O= _____

Average stack temperature, t_s, °F= _____

Meter temperature, t_m, °F= _____

Orifice $\Delta H_@$, in. H_2O= _____

Gas analysis:

$\%CO_2$= _____

$\%O_2$= _____

$\%N_2+\%CO$= _____

Fraction moisture content, B_{ws}= _____

Molecular weight of stack gas, dry basis:

$M_d=0.44\ (\%CO_2)+0.32\ (\%O_2)+0.28\ (\%N_2+\%CO)=$ _____ lb/lb mole

Molecular weight of stack gas, wet basis:

$M_w=M_d\ (1-B_{ws})+18\ (B_{ws})=$ _____ lb/lb mole

Absolute stack pressure:

$$P_s = P_{bar} + \frac{P_g}{13.6} = ____\ \text{in. Hg}$$

Viscosity of stack gas:

$\mu_s=152.418+0.2552\ t_s+3.2355\times10^{-5}\ t_s2+0.53147\ (\%0_2)-74.143\ B_{ws}=$ _____ micropoise

Cyclone flow rate:

$$Q_s = 0.002837\mu_s\left[\frac{(t_s + 460)}{M_w P_s}\right]^{0.2949} = ____ \text{ft}^3/\text{min}$$

Figure 4. Example worksheet 1, cyclone flow rate and ΔH.

Orifice pressure head (ΔH) needed for cyclone flow rate:

$$\Delta H = \left[\frac{Q_s(1 - B_{ws})P_s}{t_s + 460}\right]^2 \frac{t_{m+460} M_d 1.083 \Delta H_@}{P_{bar}} = ____ \text{in. } H_2O$$

Calculate Δ H for three temperatures:

t_s, °F			
ΔH, in. H_2O			

Stack viscosity, μ_s, micropoise = _____

Absolute stack pressure, P_s, in. Hg = _____

Average stack temperature, t_s, °F = _____

Meter temperature, t_m, °F = _____

Method 201A pitot coefficient, C_p = _____

Cyclone flow rate, ft³/min, Q_s = _____

Method 2 pitot coefficient, C_p' = _____

Molecular weight of stack gas, wet basis, M_w = _____

Nozzle diameter, D_n, in. = _____

Nozzle velocity:

$$v_n = \frac{3.056 Q_s}{D_n^2} = ____ \text{ft/sec}$$

$$v_{min} = v_n\left[0.2457 + \left[0.3072 - \frac{0.2603 Q_s^{\frac{1}{2}}\mu_s}{v_n^{1.5}}\right]^{\frac{1}{2}}\right] = ____ \text{ft/sec}$$

$$v_{max} = v_n\left[0.4457 + \left[0.5690 - \frac{0.2603 Q_s^{\frac{1}{2}}\mu_s}{v_n^{1.5}}\right]^{\frac{1}{2}}\right] = ____ \text{ft/sec}$$

Maximum and minimum velocities:

Calculate R_{min}

$$R_{min} = 0.2457 + 0.3072 - \frac{0.2603\left(\sqrt{Q_s}\right)\mu_s}{v_n 1.5} = ____$$

If R_{min} is less than 0.5, *or* if an imaginary number occurs when calculating R_{min}, use Equation 1 to calculate v_{min}. Otherwise, use Equation 2.

Eq. 1 $v_{min} = v_n$ (0.5) = ____ ft/sec

Eq. 2 $v_{min} = v_n R_{min}$ = ____ ft/sec
Calculate R_{max}.

$$R_{max} = 0.4457 + 0.5690 + \frac{0.2603\left(\sqrt{Q_s}\right)\mu_s}{v_n 1.5} = ____$$

If R_{max} is greater than 1.5, use Equation 3 to calculate v_{max}. Otherwise, use Equation 4.

Eq. 3 $v_{max} = v_n (1.5)$ = ____ ft/sec
Eq. 4 $v_{max} = v_n R_{max}$ = ____ ft/sec

Figure 5. Example worksheet 2, nozzle selection.

Maximum and minimum velocity head values:

$$\Delta p_{min} = 1.3686 \times 10^{-4} \frac{P_s M_w \left(v_{min}\right)^2}{\left(t_s + 460\right) C_p{}^2} = ____ \text{ in. } H_2O$$

$$\Delta p_{max} = 1.3686 \times 10^{-4} \frac{P_s M_w \left(v_{max}\right)^2}{\left(t_s + 460\right) C_p{}^2} = ____ \text{ in. } H_2O$$

Nozzle No.				
D_n, in.	.....	.....	.....	.....
v_n, ft/sec	.....	.....	.....	.....
v_{min}, ft/sec	.....	.....	.....	.....
v_{max}, ft/sec	.....	.....	.....	.....

Nozzle No.				
Δp_{min}, in. H_2O	.....	.....	.....	.....
Δp_{max}, in. H_2O	.....	.....	.....	.....

Velocity traverse data:

$$\Delta p(\text{Method 201A}) = \Delta p(\text{Method 2}) \left[\frac{C_p}{C_{p'}}\right]^2$$

Total run time, minutes = _____
Number of traverse points =

$$t_1 = \left[\frac{\Delta p'_1}{\Delta p'_{avg}}\right]^{\frac{1}{2}} \frac{(\text{Total run time})}{(\text{Number of points})}$$

where:

t_1 = dwell time at first traverse point, minutes.
$\Delta p'_1$ = the velocity head at the first traverse point (from a previous traverse), in. H_20.
$\Delta p'_{avg}$ = the square of the average square root of the Δp's (from a previous velocity traverse), in. H_20.

At subsequent traverse points, measure the velocity Δp and calculate the dwell time by using the following equation:

$$t_n = \frac{t_1}{(\Delta p_1)^{\frac{1}{2}}}(\Delta p_n)^{\frac{1}{2}},\ n = 2,3,***\text{total number of sampling points}$$

where:

t_n = dwell time at traverse point n, minutes.

Δp_n = measured velocity head at point n, in. H_20.

Δp_1 = measured velocity head at point 1 in. H_20.

Figure 6. Example worksheet 3, dwell time.

Point No.	Port							
	Δp	t	Δp	t	Δp	t	Δp	t
1	.....	.....	.....	.....	.....	.....	.....	.....
2	.....	.....	.....	.....	.....	.....	.....	.....
3	.....	.....	.....	.....	.....	.....	.....	.....
4	.....	.....	.....	.....	.....	.....	.....	.....
5	.....	.....	.....	.....	.....	.....	.....	.....
6	.....	.....	.....	.....	.....	.....	.....	.....

Plant _____
Date _____
Run no. _____
Filter no. _____
Amount of liquid lost during transport _____
Acetone blank volume, ml _____
Acetone wash volume, ml (4) _____ (5) _____
Acetone blank conc., mg/mg (Equation 5–4, Method 5) _____
Acetone wash blank, mg (Equation 5–5, Method 5) _____

Container No.	Weight of PM_{10} (mg)		
	Final weight	Tare weight	Weight gain
1	.....	.....	.....
3	.....	.....	.....
Total	.....	.....	.....
Less acetone blank	.....	.....	.....
Weight of PM_{10}	.....	.....	.....

Figure 7. Method 201A analysis sheet.

TABLE 1—PERFORMANCE SPECIFICATIONS FOR SOURCE PM_{10} CYCLONES AND NOZZLE COMBINATIONS

Parameter	Units	Specifications
1. Collection efficiency.	Percent	Such that collection efficiency falls within envelope specified by Section 5.2.6 and Figure 8.
2. Cyclone cut size (D_{50}).	µm	10±1 µm aerodynamic diameter.

TABLE 2—PARTICLE SIZES AND NOMINAL GAS VELOCITIES FOR EFFICIENCY

Particle size (µm)[a]	Target gas velocities (m/sec)		
	7±1.0	15±1.5	25±2.5
5±0.5	.....	.....	.....
7±0.5	.....	.....	.....
10±0.5	.....	.....	.....
14±1.0	.....	.....	.....
20±1.0	.....	.....	.....

([a]) Mass median aerodynamic diameter.

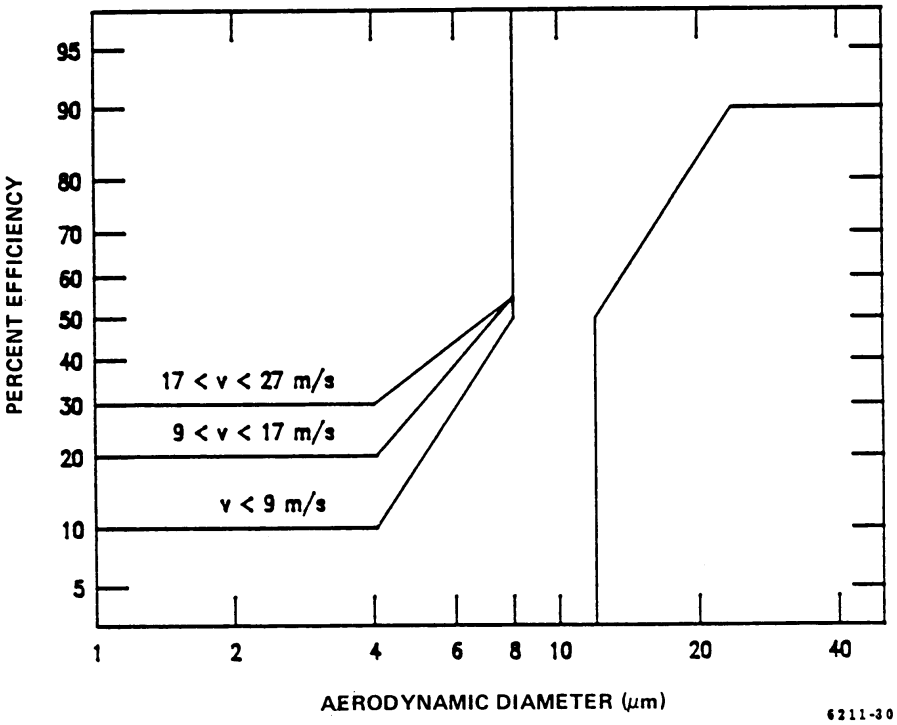

Figure 8. Efficiency envelope for the PM_{10} cyclone.

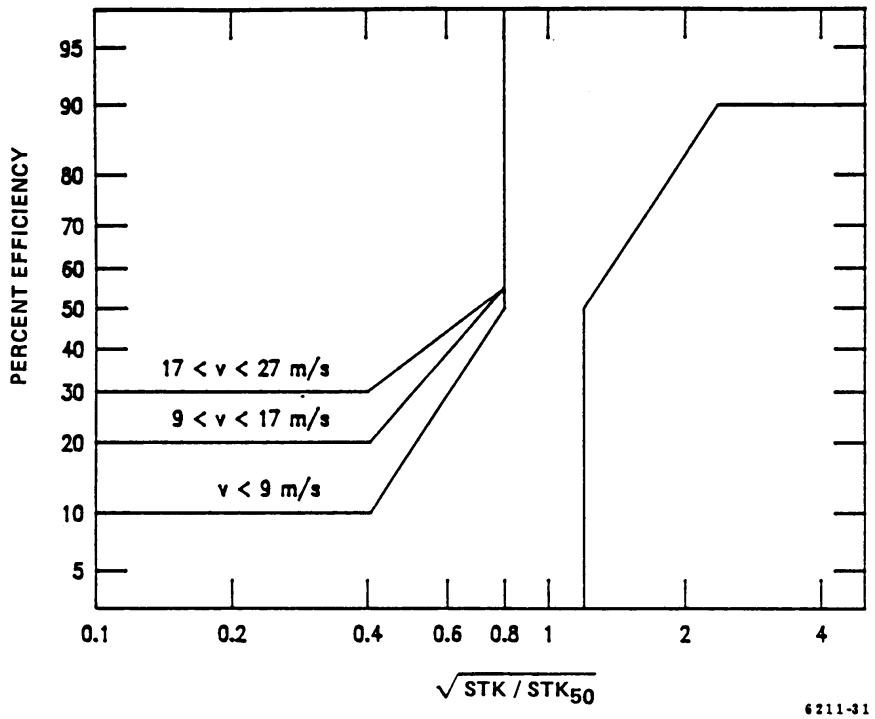

Figure 9. Efficiency envelope for first calibration stage.

METHOD 202—DETERMINATION OF CONDENSIBLE PARTICULATE EMISSIONS FROM STATIONARY SOURCES

1. Applicability and Principle

1.1 Applicability.

1.1.1 This method applies to the determination of condensible particulate matter (CPM) emissions from stationary sources. It is intended to represent condensible matter as material that condenses after passing through a filter and as measured by this method (Note: The filter catch can be analyzed according to the appropriate method).

1.1.2 This method may be used in conjunction with Method 201 or 201A if the probes are glass-lined. Using Method 202 in conjunction with Method 201 or 201A, only the impinger train configuration and analysis is addressed by this method. The sample train operation and front end recovery and analysis shall be conducted according to Method 201 or 201A.

1.1.3 This method may also be modified to measure material that condenses at other temperatures by specifying the filter and probe temperature. A heated Method 5 out-of-stack filter may be used instead of the in-stack filter to determine condensible emissions at wet sources.

1.2 Principle.

1.2.1 The CPM is collected in the impinger portion of a Method 17 (appendix A, 40 CFR part 60) type sampling train. The impinger contents are immediately purged after the run with nitrogen (N_2) to remove dissolved sulfur dioxide (SO_2) gases from the impinger contents. The impinger solution is then extracted with methylene chloride ($MeCl_2$). The organic and aqueous fractions are then taken to dryness and the residues weighed. The total of both fractions represents the CPM.

1.2.2 The potential for low collection efficiency exist at oil-fired boilers. To improve the collection efficiency at these type of sources, an additional filter placed between the second and third impinger is recommended.

2. Precision and Interference

2.1 Precision. The precision based on method development tests at an oil-fired boiler and a catalytic cracker were 11.7 and 4.8 percent, respectively.

2.2 Interference. Ammonia. In sources that use ammonia injection as a control technique for hydrogen chloride (HC1), the ammonia interferes by reacting with HC1 in the gas stream to form ammonium chloride (NH_4 C1) which would be measured as CPM. The sample may be analyzed for chloride and the equivalent amount of NH_4 C1 can be subtracted from the CPM weight. However, if NH_4 C1 is to be counted as CPM, the inorganic fraction should be taken to near dryness (less than 1 ml liquid) in the oven and then allowed to air dry at ambient temperature to prevent any NH_4 C1 from vaporizing.

3. Apparatus

3.1 Sampling Train. Same as in Method 17, section 2.1, with the following exceptions noted below (see Figure 202–1). *Note:* Mention of trade names or specific products does not constitute endorsement by EPA.

3.1.1 The probe extension shall be glass-lined or Teflon.

3.1.2 Both the first and second impingers shall be of the Greenburg-Smith design with the standard tip.

3.1.3 All sampling train glassware shall be cleaned prior to the test with soap and tap water, water, and rinsed using tap water, water, acetone, and finally, $MeCl_2$. It is important to completely remove all silicone grease from areas that will be exposed to the $MeCl_2$ during sample recovery.

3.2 Sample Recovery. Same as in Method 17, section 2.2, with the following additions:

3.2.1 N_2 Purge Line. Inert tubing and fittings capable of delivering 0 to 28 liters/min of N_2 gas to the impinger train from a standard gas cylinder (see Figure 202–2). Standard 0.95 cm (⅜-inch) plastic tubing and compression fittings in conjunction with an adjustable pressure regulator and needle valve may be used.

3.2.2 Rotameter. Capable of measuring gas flow at 20 liters/min.

3.3 Analysis. The following equipment is necessary in addition to that listed in Method 17, section 2.3:

3.3.1 Separatory Funnel. Glass, 1-liter.

3.3.2 Weighing Tins. 350-ml.

3.3.3 Dry Equipment. Hot plate and oven with temperature control.

3.3.4 Pipets. 5-ml.

3.3.5 Ion Chromatograph. Same as in Method 5F, Section 2.1.6.

4. Reagents

Unless otherwise indicated, all reagents must conform to the specifications established by the Committee on Analytical Reagents of the American Chemical Society. Where such specifications are not available, use the best available grade.

4.1 Sampling. Same as in Method 17, section 3.1, with the addition of deionized distilled water to conform to the American Society for Testing and Materials Specification D 1193–74, Type II and the omittance of section 3.1.4.

4.2 Sample Recovery. Same as in Method 17, section 3.2, with the following additions:

4.2.1 N_2 Gas. Zero N_2 gas at delivery pressures high enough to provide a flow of 20 liters/min for 1 hour through the sampling train.

4.2.2 Methylene Chloride, ACS grade. Blanks shall be run prior to use and only methylene chloride with low blank values (0.001 percent) shall be used.

4.2.3 Water. Same as in section 4.1.

4.3 Analysis. Same as in Method 17, section 3.3, with the following additions:

4.3.1 Methylene Chloride. Same as section 4.2.2.

4.3.2 Ammonium Hydroxide. Concentrated (14.8 M) NH_4 OH.

4.3.3 Water. Same as in section 4.1.

4.3.4 Phenolphthalein. The pH indicator solution, 0.05 percent in 50 percent alcohol.

5. Procedure

5.1 Sampling. Same as in Method 17, section 4.1, with the following exceptions:

5.1.1 Place 100 ml of water in the first three impingers.

5.1.2 The use of silicone grease in train assembly is not recommended because it is very soluble in $MeCl_2$ which may result in sample contamination. Teflon tape or similar means may be used to provide leak-free connections between glassware.

5.2 Sample Recovery. Same as in Method 17, section 4.2 with the addition of a post-test N_2 purge and specific changes in handling of individual samples as described below.

5.2.1 Post-test N_2 Purge for Sources Emitting SO_2. (Note: This step is recommended, but is optional. With little or no SO_2 is present in the gas stream, i.e., the pH of the impinger solution is greater than 4.5, purging has been found to be unnecessary.) As soon as possible after the post-test leak check, detach the probe and filter from the impinger train. Leave the ice in the impinger box to prevent removal of moisture during the purge. If necessary, add more ice during the purge to maintain the gas temperature below 20 °C. With no flow of gas through the clean purge line and fittings, attach it to the input of the impinger train (see Figure 202–2). To avoid over- or underpressurizing the impinger array, slowly commence the N_2 gas flow through the line while simultaneously opening the meter box pump valve(s). When using the gas cylinder pressure to push the purge gas through the sample train, adjust the flow rate to 20 liters/min through the rotameter. When pulling the

purge gas through the sample train using the meter box vacuum pump, set the orifice pressure differential to $\Delta H_@$ and maintain an overflow rate through the rotameter of less than 2 liters/min. This will guarantee that the N_2 delivery system is operating at greater than ambient pressure and prevents the possibility of passing ambient air (rather than N_2) through the impingers. Continue the purge under these conditions for 1 hour, checking the rotameter and ΔH value(s) periodically. After 1 hour, simultaneously turn off the delivery and pumping systems.

5.2.2 Sample Handling.

5.2.2.1 Container Nos. 1, 2, and 3. If filter catch is to be determined, as detailed in Method 17, section 4.2.

5.2.2.2 Container No. 4 (Impinger Contents). Measure the liquid in the first three impingers to within 1 ml using a clean graduated cylinder or by weighing it to within 0.5 g using a balance. Record the volume or weight of liquid present to be used to calculate the moisture content of the effluent gas. Quantitatively transfer this liquid into a clean sample bottle (glass or plastic); rinse each impinger and the connecting glassware, including probe extension, twice with water, recover the rinse water, and add it to the same sample bottle. Mark the liquid level on the bottle.

5.2.2.3 Container No. 5 ($MeCl_2$ Rinse). Follow the water rinses of each impinger and the connecting glassware, including the probe extension with two rinses of $MeCl_2$; save the rinse products in a clean, glass sample jar. Mark the liquid level on the jar.

5.2.2.4 Container No. 6 (Water Blank). Once during each field test, place 500 ml of water in a separate sample container.

5.2.2.5 Container No. 7 ($MeCl_2$ Blank). Once during each field test, place in a separate glass sample jar a volume of $MeCl_2$ approximately equivalent to the volume used to conduct the $MeCl_2$ rinse of the impingers.

5.3 Analysis. Record the data required on a sheet such as the one shown in Figure 202–3. Handle each sample container as follows:

5.3.1 Container Nos. 1, 2, and 3. If filter catch is analyzed, as detailed in Method 17, section 4.3.

5.3.2 Container Nos. 4 and 5. Note the level of liquid in the containers and confirm on the analytical data sheet whether leakage occurred during transport. If a noticeable amount of leakage has occurred, either void the sample or use methods, subject to the approval of the Administrator, to correct the final results. Measure the liquid in Container No. 4 either volumetrically to ±1 ml or gravimetrically to ±0.5 g. Remove a 5-ml aliquot and set aside for later ion chromatographic (IC) analysis of sulfates. (Note: Do not use this aliquot to determine chlorides since the HCl will be evaporated during the first drying step; Section 8.2 details a procedure for this analysis.)

5.3.2.1 Extraction. Separate the organic fraction of the sample by adding the contents of Container No. 4 ($MeCl_2$) to the contents of Container No. 4 in a 1000-ml separatory funnel. After mixing, allow the aqueous and organic phases to fully separate, and drain off most of the organic/$MeCl_2$ phase. Then add 75 ml of $MeCl_2$ to the funnel, mix well, and drain off the lower organic phase. Repeat with another 75 ml of $MeCl_2$. This extraction should yield about 250 ml of organic extract. Each time, leave a small amount of the organic/$MeCl_2$ phase in the separatory funnel ensuring that no water is collected in the organic phase. Place the organic extract in a tared 350-ml weighing tin.

5.3.2.2 Organic Fraction Weight Determination (Organic Phase from Container Nos. 4 and 5). Evaporate the organic extract at room temperature and pressure in a laboratory hood. Following evaporation, desiccate the organic fraction for 24 hours in a desiccator containing anhydrous calcium sulfate. Weigh to a constant weight and report the results to the nearest 0.1 mg.

5.3.2.3 Inorganic Fraction Weight Determination. (Note: If NH_4 Cl is to be counted as CPM, the inorganic fraction should be taken to near dryness (less than 1 ml liquid) in the oven and then allow to air dry at ambient temperature. If multiple acid emissions are suspected, the ammonia titration procedure in section 8.1 may be preferred.) Using a hot plate, or equivalent, evaporate the aqueous phase to approximately 50 ml; then, evaporate to dryness in a 105 °C oven. Redissovle the residue in 100 ml of water. Add five drops of phenolphthalein to this solution; then, add concentrated (14.8 M) NH_4 OH until the sample turns pink. Any excess NH_2 OH will be evaporated during the drying step. Evaporate the sample to dryness in a 105 °C oven, desiccate the sample for 24 hours, weigh to a constant weight, and record the results to the nearest 0.1 mg. (Note: The addition of NH_4 OH is recommended, but is optional when little or no SO_2 is present in the gas stream, i.e., when the pH of the impinger solution is greater than 4.5, the addition of NH_4 OH is not necessary.)

5.3.2.4 Analysis of Sulfate by IC to Determine Ammonium Ion (NH_4+) Retained in the Sample. (Note: If NH_4 OH is not added, omit this step.) Determine the amount of sulfate in the aliquot taken from Container No. 4 earlier as described in Method 5F (appendix A, 40 CFR part 60). Based on the IC SO_4-2 analysis of the aliquot, calculate the correction factor to subtract the NH_4+ retained in the sample and to add the combined water removed by the acid-base reaction (see section 7.2).

5.3.3 Analysis of Water and $MeCl_2$ Blanks (Container Nos. 6 and 7). Analyze these sample blanks as described above in sections 5.3.2.3 and 5.3.2.2, respectively.

5.3.4 Analysis of Acetone Blank (Container No. 8). Same as in Method 17, section 4.3.

6. Calibration

Same as in Method 17, section 5, except for the following:

6.1 IC Calibration. Same as Method 5F, section 5.

6.2 Audit Procedure. Concurrently, analyze the audit sample and a set of compliance samples in the same manner to evaluate the technique of the analyst and the standards preparation. The same analyst, analytical reagents, and analytical system shall be used both for compliance samples and the EPA audit sample. If this condition is met, auditing of subsequent compliance analyses for the same enforcement agency within 30 days is not required. An audit sample set may not be used to validate different sets of compliance samples under the jurisdiction of different enforcement agencies, unless prior arrangements are made with both enforcement agencies.

6.3 Audit Samples. Audit Sample Availability. Audit samples will be supplied only to enforcement agencies for compliance tests. The availability of audit samples may be obtained by writing:

Source Test Audit Coordinator (MD–77B), Quality Assurance Division, Atmospheric Research and Exposure Assessment Laboratory, U.S. Environmental Protection Agency, Research Triangle, Park, NC 27711

or by calling the Source Test Audit Coordinator (STAC) at (919) 541–7834. The request for the audit sample must be made at least 30 days prior to the scheduled compliance sample analysis.

6.4 Audit Results. Calculate the audit sample concentration according to the calculation procedure described in the audit instructions included with the audit sample. Fill in the audit sample concentration and the analyst's name on the audit response form included with the audit instructions. Send one copy to the EPA Regional Office or the appropriate enforcement agency and a second copy to the STAC. The EPA Regional Office or the appropriate enforcement agency will report the results of the audit to the laboratory being audited. Include this response with the results of the compliance samples in relevant reports to the EPA Regional Office or the appropriate enforcement agency.

7. Calculations

Same as in Method 17, section 6, with the following additions:

7.1 Nomenclature. Same as in Method 17, section 6.1 with the following additions.

C_{cpm}=Concentration of the CPM in the stack gas, dry basis, corrected to standard conditions, g/dscm (g/dscf).

C_{SO4}=Concentration of SO_4-2 in the sample, mg/ml.

m_b=Sum of the mass of the water and $MeCl_2$ blanks, mg.

m_c=Mass of the NH_4+ added to sample to form ammonium sulfate, mg.

m_i=Mass of inorganic CPM matter, mg.

m_o=Mass of organic CPM, mg.

m_r=Mass of dried sample from inorganic fraction, mg.

V_b=Volume of aliquot taken for IC analysis, ml.

V_{ic}=Volume of impinger contents sample, ml.

7.2 Correction for NH_4+ and H_2O. Calculate the correction factor to subtract the NH_4+ retained in the sample based on the IC SO_4-2 and if desired, add the combined water removed by the acid-base reaction.

$$m_c = KC_{SO2}V_{ic} \qquad \text{Eq. } 202-1$$

=0.1840, when only correcting for NH_4+.

7.3 Mass of Inorganic CPM.

$$m_i = m_r \frac{V_{ic}}{V_{ic} - V_b} - m_c \qquad \text{Eq. } 202-2$$

7.4 Concentration of CPM.

$$C_{cpm} = \frac{m_o + m_i - m_b}{VM_{std}} \qquad \text{Eq. } 202-3$$

8. Alternative Procedures

8.1 Determination of NH_4+ Retained in Sample by Titration.

8.1.1 An alternative procedure to determine the amount of NH_4+ added to the inorganic fraction by titration may be used. After dissolving the inorganic residue in 100 ml of water, titrate the solution with 0.1 N NH_4 OH to a pH of 7.0, as indicated by a pH meter. The 0.1 N NH_4 OH is made as follows: Add 7 ml of concentrated (14.8 M) NH_4 OH to 1 liter of water. Standardize against standardized 0.1 N H_2 SO_4 and calculate the exact normality using a procedure parallel to that described in section 5.5 of Method 6 (appendix A, 40 CFR part 60). Alternatively, purchase 0.1 N NH_4 OH that has been standardized against a National Institute of Standards and Technology reference material.

8.1.2 Calculate the concentration of SO_4-2 in the sample using the following equation.

$$CSO_4 = \frac{48.03\, V_t N}{100} \qquad \text{Eq. } 202-4$$

where

N = Normality of the NH_4OH, mg/ml.

V_t = Volume of NH_4 OH titrant, ml.

48.03 = mg/meq.

100 = Volume of solution, ml.

8.3.1 Calculate the CPM as described in section 7.

8.2 Analysis of Chlorides by IC. At the conclusion of the final weighing as described in section 5.3.2.3, redissolve the inorganic fraction in 100 ml of water. Analyze an aliquot of the redissolved sample for chlorides by IC using techniques similar to those described in Method 5F for sulfates. Previous drying of the sample should have removed all HCl. Therefore, the remaining chlorides measured by IC can be assumed to be NH_4 Cl, and this weight can be subtracted from the weight determined for CPM.

8.3 Air Purge to Remove SO_2 from Impinger Contents. As an alternative to the post-test N_2 purge described in section 5.2.1, the tester may opt to conduct the post-test purge with air at 20 liter/min. Note: The use of an air purge is not as effective as a N_2 purge.

8.4 Chloroform-ether Extraction. As an alternative to the methylene chloride extraction described in section 5.3.2.1, the tester may opt to conduct a chloroform-ether extraction. Note: The Chloroform-ether was not as effective as the $MeCl_2$ in removing the organics, but it was found to be an acceptable organic extractant. Chloroform and diethylether of ACS grade, with low blank values (0.001 percent), shall be used. Analysis of the chloroform and diethylether blanks shall be conducted according to Section 5.3.3 for $MeCl_2$.

8.4.1 Add the contents of Container No. 4 to a 1000-ml separatory funnel. Then add 75 ml of chloroform to the funnel, mix well, and drain off the lower organic phase. Repeat two more times with 75 ml of chloroform. Then perform three extractions with 75 ml of diethylether. This extraction should yield approximately 450 ml of organic extraction. Each time, leave a small amount of the organic/$MeCl_2$ phase in the separatory funnel ensuring that no water is collected in the organic phase.

8.4.2 Add the contents of Container No. 5 to the organic extraction. Place approximately 300 ml of the organic extract in a tared 350-ml weighing tin while storing the remaining organic extract in a sample container. As the organic extract evaporates, add the remaining extract to the weighing tin.

8.4.3 Determine the weight of the organic phase as described in Section 5.3.2.2.

8.5 Improving Collection Efficiency. If low impinger collection efficiency is suspected, the following procedure may be used.

8.5.1 Place an out-of-stock filter as described in Method 8 between the second and third impingers.

8.5.2 Recover and analyze the filter according to Method 17, Section 4.2. Include the filter holder as part of the connecting glassware and handle as described in sections 5.2.2.2 and 5.2.2.3.

8.5.3 Calculate the Concentration of CPM as follows:

$$C_{cpm} = \frac{m_o + m_i + m_f - m_b}{VM_{std}} \qquad \text{Eq. } 202-5$$

where:

m_f = amount of CPM collected on out-of-stack filter, mg.

8.6 Wet Source Testing. When testing at a wet source, use a heated out-of-stack filter as described in Method 5.

9. Bibliography

1. DeWees, W.D., S.C. Steinsberger, G.M. Plummer, L.T. Lay, G.D. McAlister, and R.T. Shigehara. ''Laboratory and Field Evaluation of the EPA Method 5 Impinger Catch for Measuring Condensible Matter from Stationary Sources.'' Paper presented at the 1989 EPA/AWMA International Symposium on Measurement of Toxic and Related Air Pollutants. Raleigh, North Carolina. May 1–5, 1989.

2. DeWees, W.D. and K.C. Steinsberger. ''Method Development and Evaluation of Draft Protocol for Measurement of Condensible Particulate Emissions.'' Draft Report. November 17, 1989.

3. Texas Air Control Board, Laboratory Division. ''Determination of Particulate in Stack Gases Containing Sulfuric Acid and/or Sulfur Dioxide.'' *Laboratory Methods for Determination of Air Pollutants.* Modified December 3, 1976.

4. Nothstein, Greg. Masters Thesis. University of Washington. Department of Environmental Health. Seattle, Washington.

5. ''Particulate Source Test Procedures Adopted by Puget Sound Air Pollution Control Agency Board of Directors.'' Puget Sound Air Pollution Control Agency, Engineering Division. Seattle, Washington. August 11, 1983.

6. Commonwealth of Pennsylvania, Department of Environmental Resources. Chapter 139, Sampling and Testing (Title 25, Rules and Regulations, Part I, Department of Environmental Resources, Subpart C, Protection of Natural Resources, Article III, Air Resources). January 8, 1960.

7. Wisconsin Department of Natural Resources. *Air Management Operations Handbook, Revision 3.* January 11, 1988.

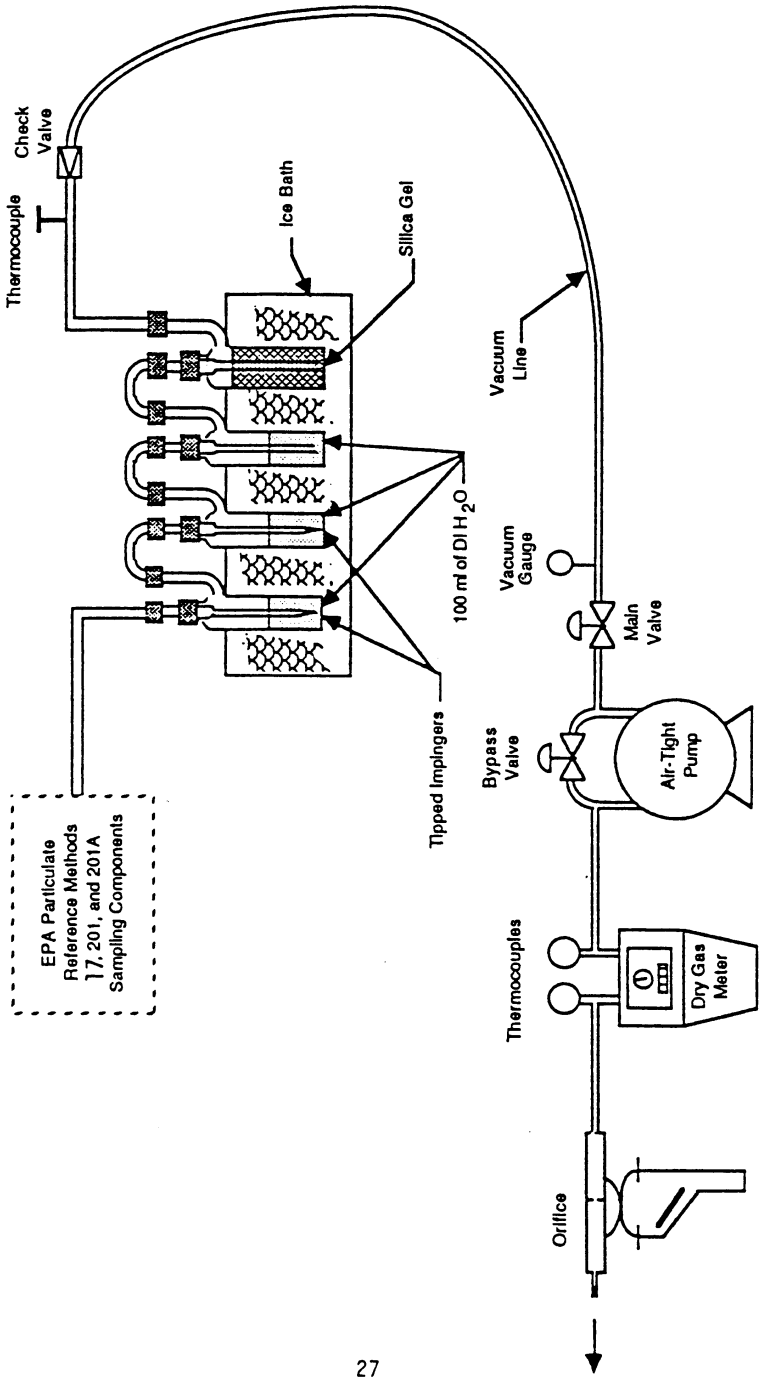

Figure 202-1. Schematic of condensible particulate sampling train.

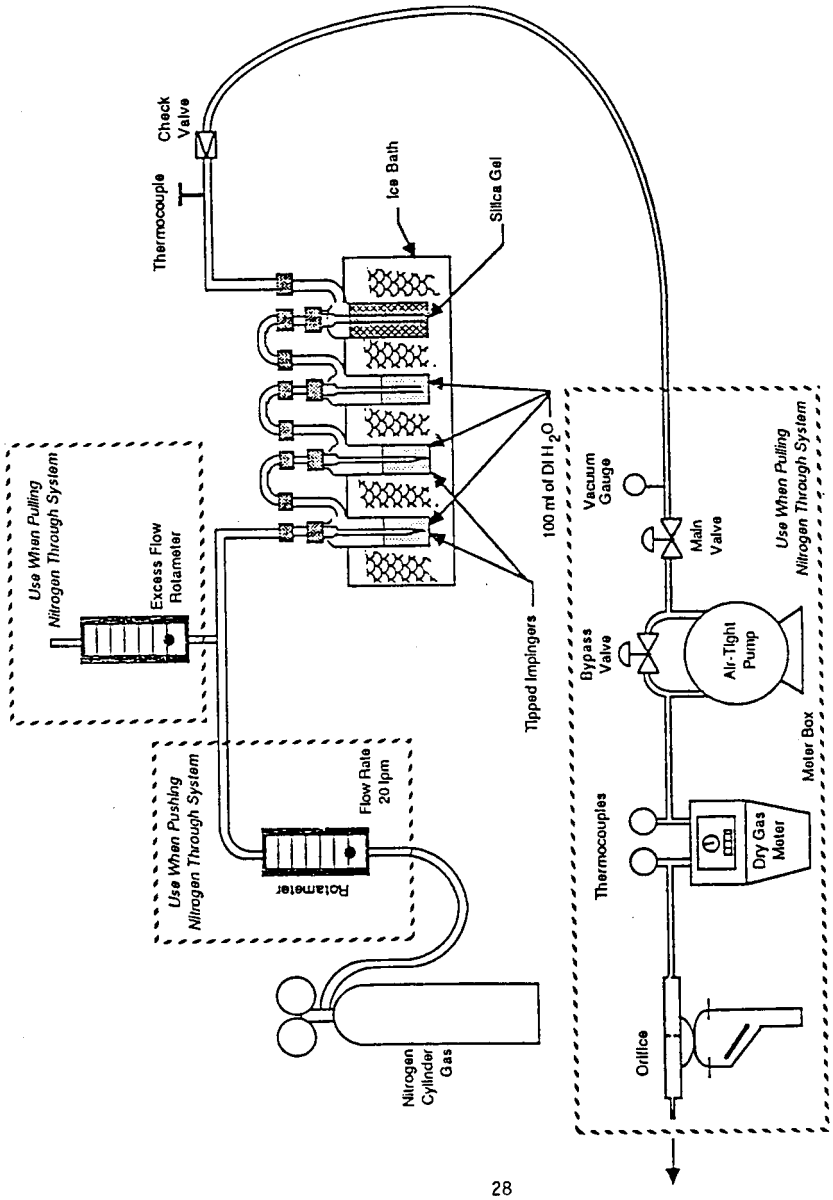

Figure 202-2. Schematic of post-test nitrogen purge system.

28

Moisture Determination

Volume or weight of liquid in impingers: _____ ml or g

Weight of moisture in silica gel: _____ g

Sample Preparation (Container No. 4)

Amount of liquid lost during transport: _____ ml

Final volume: _____ ml

pH of sample prior to analysis: _____

Addition of NH_4 OH required: _____
Sample extracted 2X with 75 ml $MeCl_2$?: _____

For Titration of Sulfate

Normality of NH_2 OH: _____ N
Volume of sample titrated: _____ ml
Volume of titrant: _____ ml

Sample Analysis

Container number	Weight of condensible particulate, mg		
	Final weight	Tare weight	Weight gain
4 (Inorganic)	.....	.....	.....
4 & 5 (Organic)	.....	.....	.....

Total: _____
Less Blank: _____
Weight of Consensible Particulate:
Figure 202–3. Analytical data sheet.

METHOD 204—CRITERIA FOR AND VERIFICATION OF A PERMANENT OR TEMPORARY TOTAL ENCLOSURE

1. Scope and Application

This procedure is used to determine whether a permanent or temporary enclosure meets the criteria for a total enclosure. An existing building may be used as a temporary or permanent enclosure as long as it meets the appropriate criteria described in this method.

2. Summary of Method

An enclosure is evaluated against a set of criteria. If the criteria are met and if all the exhaust gases from the enclosure are ducted to a control device, then the volatile organic compounds (VOC) capture efficiency (CE) is assumed to be 100 percent, and CE need not be measured. However, if part of the exhaust gas stream is not ducted to a control device, CE must be determined.

3. Definitions

3.1 Natural Draft Opening (NDO). Any permanent opening in the enclosure that remains open during operation of the facility and is not connected to a duct in which a fan is installed.

3.2 Permanent Total Enclosure (PE). A permanently installed enclosure that completely surrounds a source of emissions such that all VOC emissions are captured and contained for discharge to a control device.

3.3 Temporary Total Enclosure (TTE). A temporarily installed enclosure that completely surrounds a source of emissions such that all VOC emissions that are not directed through the control device (i.e. uncaptured) are captured by the enclosure and contained for discharge through ducts that allow for the accurate measurement of the uncaptured VOC emissions.

3.4 Building Enclosure (BE). An existing building that is used as a TTE.

4. Safety

An evaluation of the proposed building materials and the design for the enclosure is recommended to minimize any potential hazards.

5. Criteria for Temporary Total Enclosure

5.1 Any NDO shall be at least four equivalent opening diameters from each VOC emitting point unless otherwise specified by the Administrator.

5.2 Any exhaust point from the enclosure shall be at least four equivalent duct or hood diameters from each NDO.

5.3 The total area of all NDO's shall not exceed 5 percent of the surface area of the enclosure's four walls, floor, and ceiling.

5.4 The average facial velocity (FV) of air through all NDO's shall be at least 3,600 m/hr (200 fpm). The direction of air flow through all NDO's shall be into the enclosure.

5.5 All access doors and windows whose areas are not included in section 5.3 and are not included in the calculation in section 5.4 shall be closed during routine operation of the process.

6. Criteria for a Permanent Total Enclosure

6.1 Same as sections 5.1 and 5.3 through 5.5.

6.2 All VOC emissions must be captured and contained for discharge through a control device.

7. Quality Control

7.1 The success of this method lies in designing the TTE to simulate the conditions that exist without the TTE (i.e., the effect of the TTE on the normal flow patterns around the affected facility or the amount of uncaptured VOC emissions should be minimal). The TTE must enclose the application stations, coating reservoirs, and all areas from the application station to the oven. The oven does not have to be enclosed if it is under negative pressure. The NDO's of the temporary enclosure and an exhaust fan must be properly sized and placed.

7.2 Estimate the ventilation rate of the TTE that best simulates the conditions that exist without the TTE (i.e., the effect of the TTE on the normal flow patterns around the affected facility or the amount of uncaptured VOC emissions should be minimal). Figure 204–1 or the following equation may be used as an aid.

$$CE = \frac{Q_G C_G}{Q_G C_G + Q_F C_F} \qquad \text{Eq. 204-1}$$

Measure the concentration (C_G) and flow rate (Q_G) of the captured gas stream, specify a safe concentration (C_F) for the uncaptured gas stream, estimate the CE, and then use the plot in Figure 204–1 or Equation 204–1 to determine the volumetric flow rate of the uncaptured gas stream (QF). An exhaust fan that has a variable flow control is desirable.

7.3 Monitor the VOC concentration of the captured gas steam in the duct before the capture device without the TTE. To minimize the effect of temporal variation on the captured emissions, the baseline measurement should be made over as long a time period as practical. However, the process conditions must be the same for the measurement in section 7.5 as they are for this baseline measurement. This may require short measuring times for this quality control check before and after the construction of the TTE.

7.4 After the TTE is constructed, monitor the VOC concentration inside the TTE. This concentration should not continue to increase, and must not exceed the safe level according to Occupational Safety and Health Administration requirements for permissible exposure limits. An increase in VOC concentration indicates poor TTE design.

7.5 Monitor the VOC concentration of the captured gas stream in the duct before the capture device with the TTE. To limit the effect of the TTE on the process, the VOC concentration with and without the TTE must be within 10 percent. If the measurements do not agree, adjust the ventilation rate from the TTE until they agree within 10 percent.

8. Procedure

8.1 Determine the equivalent diameters of the NDO's and determine the distances from each VOC emitting point to all NDO's. Determine the equivalent diameter of each exhaust duct or hood and its distance to all NDO's. Calculate the distances in terms of equivalent diameters. The number of equivalent diameters shall be at least four.

8.2 Measure the total surface area (A_T) of the enclosure and the total area (A_N) of all NDO's in the enclosure. Calculate the NDO to enclosure area ratio (NEAR) as follows:

$$NEAR = \frac{A_N}{A_T} \qquad \text{Eq. 204-2}$$

The NEAR must be ≤10.05.

8.3 Measure the volumetric flow rate, corrected to standard conditions, of each gas stream exiting the enclosure through an exhaust duct or hood using EPA Method 2. In some cases (e.g., when the building is the enclosure), it may be necessary to measure the volumetric flow rate, corrected to standard conditions, of each gas stream entering the enclosure through a forced makeup air duct using Method 2. Calculate FV using the following equation:

$$FV = \frac{Q_O - Q_I}{A_N} \qquad \text{Eq. 204-3}$$

where:

Q_O = the sum of the volumetric flow from all gas streams exiting the enclosure through an exhaust duct or hood.

Q_I = the sum of the volumetric flow from all gas streams into the enclosure through a forced makeup air duct; zero, if there is no forced makeup air into the enclosure.

A_N = total area of all NDO's in enclosure.

The FV shall be at least 3,600 m/hr (200 fpm). Alternatively, measure the pressure differential across the enclosure. A pressure drop of 0.013 mm Hg (0.007 in. H_2O) corresponds to an FV of 3,600 m/hr (200 fpm).

8.4 Verify that the direction of air flow through all NDO's is inward. If FV is less than 9,000 m/hr (500 fpm), the continuous inward flow of air shall be verified using streamers, smoke tubes, or tracer gases. Monitor the direction of air flow for at least 1 hour, with checks made no more than 10 minutes apart. If FV is greater than 9,000 m/hr (500 fpm), the direction of air flow through the NDOs shall be presumed to be inward at all times without verification.

9. Diagrams

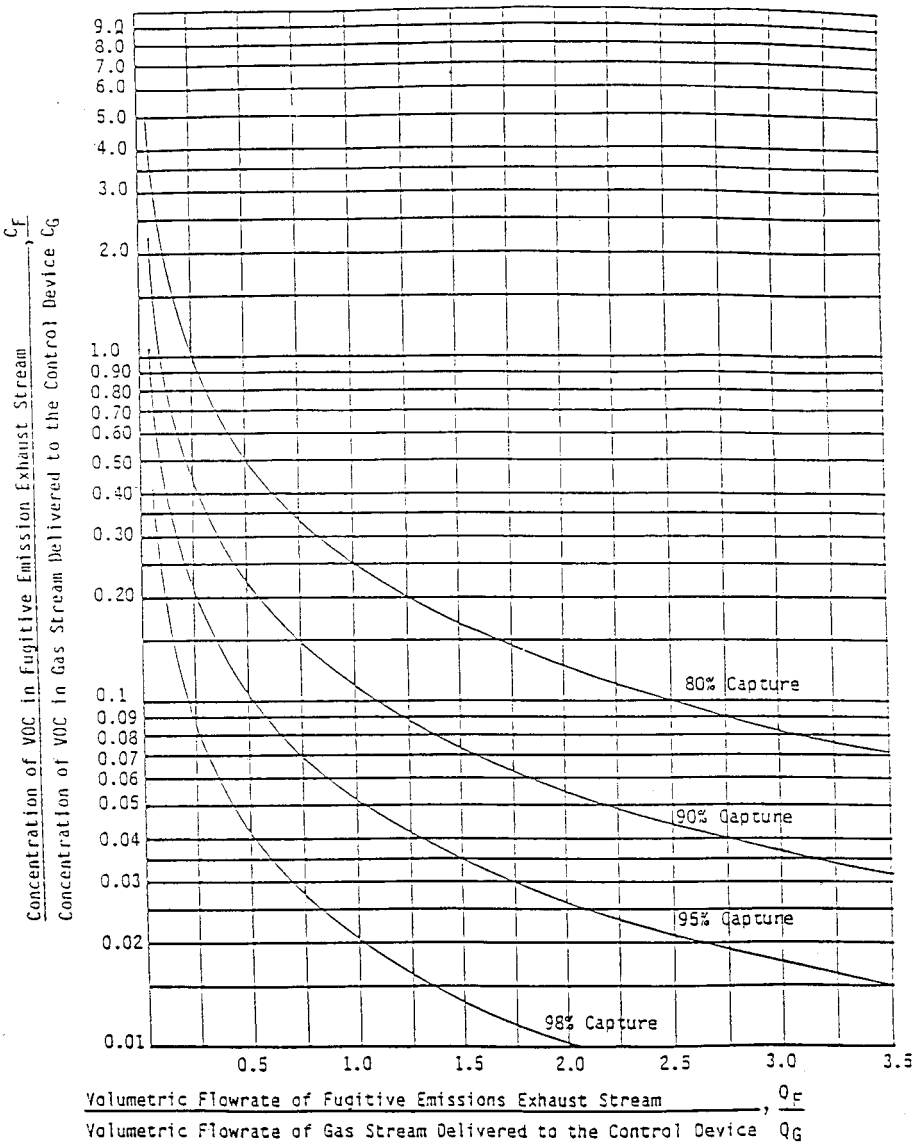

Figure 204-1. The crumpler chart.

METHOD 204A—VOLATILE ORGANIC COMPOUNDS CONTENT IN LIQUID INPUT STREAM

1. Scope and Application

1.1 Applicability. This procedure is applicable for determining the input of volatile organic compounds (VOC). It is intended to be used in the development of liquid/gas protocols for determining VOC capture efficiency (CE) for surface coating and printing operations.

1.2 Principle. The amount of VOC introduced to the process (L) is the sum of the products of the weight (W) of each VOC containing liquid (ink, paint, solvent, etc.) used and its VOC content (V).

1.3 Sampling Requirements. A CE test shall consist of at least three sampling runs. Each run shall cover at least one complete production cycle, but shall be at least 3 hours long. The sampling time for each run need not exceed 8 hours, even if the production cycle has not been completed. Alternative sampling times may be used with the approval of the Administrator.

2. Summary of Method

The amount of VOC containing liquid introduced to the process is determined as the weight difference of the feed material before and after each sampling run. The VOC content of the liquid input material is determined by volatilizing a small aliquot of the material and analyzing the volatile material using a flame ionization analyzer (FIA). A sample of each VOC containing liquid is analyzed with an FIA to determine V.

3. Safety

Because this procedure is often applied in highly explosive areas, caution and care should be exercised in choosing, installing, and using the appropriate equipment.

4. Equipment and Supplies

Mention of trade names or company products does not constitute endorsement. All gas concentrations (percent, ppm) are by volume, unless otherwise noted.

4.1 Liquid Weight.

4.1.1 Balances/Digital Scales. To weigh drums of VOC containing liquids to within 0.2 lb or 1.0 percent of the total weight of VOC liquid used.

4.1.2 Volume Measurement Apparatus (Alternative). Volume meters, flow meters, density measurement equipment, etc., as needed to achieve the same accuracy as direct weight measurements.

4.2 VOC Content (FIA Technique). The liquid sample analysis system is shown in Figures 204A–1 and 204A–2. The following equipment is required:

4.2.1 Sample Collection Can. An appropriately-sized metal can to be used to collect VOC containing materials. The can must be constructed in such a way that it can be grounded to the coating container.

4.2.2 Needle Valves. To control gas flow.

4.2.3 Regulators. For carrier gas and calibration gas cylinders.

4.2.4 Tubing. Teflon or stainless steel tubing with diameters and lengths determined by connection requirements of equipment. The tubing between the sample oven outlet and the FIA shall be heated to maintain a temperature of 120±5 °C.

4.2.5 Atmospheric Vent. A tee and 0- to 0.5-liter/min rotameter placed in the sampling line between the carrier gas cylinder and the VOC sample vessel to release the excess carrier gas. A toggle valve placed between the tee and the rotameter facilitates leak tests of the analysis system.

4.2.6 Thermometer. Capable of measuring the temperature of the hot water bath to within 1 °C.

4.2.7 Sample Oven. Heated enclosure, containing calibration gas coil heaters, critical orifice, aspirator, and other liquid sample analysis components, capable of maintaining a temperature of 120±5 °C.

4.2.8 Gas Coil Heaters. Sufficient lengths of stainless steel or Teflon tubing to allow zero and calibration gases to be heated to the sample oven temperature before entering the critical orifice or aspirator.

4.2.9 Water Bath. Capable of heating and maintaining a sample vessel temperature of 100±5 °C.

4.2.10 Analytical Balance. To measure ±0.001 g.

4.2.11 Disposable Syringes. 2-cc or 5-cc.

4.2.12 Sample Vessel. Glass, 40-ml septum vial. A separate vessel is needed for each sample.

4.2.13 Rubber Stopper. Two-hole stopper to accommodate 3.2-mm (⅛-in.) Teflon tubing, appropriately sized to fit the opening of the sample vessel. The rubber stopper should be wrapped in Teflon tape to provide a tighter seal and to prevent any reaction of the sample with the rubber stopper. Alternatively, any leak-free closure fabricated of nonreactive materials and accommodating the necessary tubing fittings may be used.

4.2.14 Critical Orifices. Calibrated critical orifices capable of providing constant flow rates from 50 to 250 ml/min at known pressure drops. Sapphire orifice assemblies (available from O'Keefe Controls Company) and glass capillary tubing have been found to be adequate for this application.

4.2.15 Vacuum Gauge. Zero to 760-mm (0- to 30-in.) Hg U-Tube manometer or vacuum gauge.

4.2.16 Pressure Gauge. Bourdon gauge capable of measuring the maximum air pressure at the aspirator inlet (e.g., 100 psig).

4.2.17 Aspirator. A device capable of generating sufficient vacuum at the sample vessel to create critical flow through the calibrated orifice when sufficient air pressure is present at the aspirator inlet. The aspirator must also provide sufficient sample pressure to operate the FIA. The sample is also mixed with the dilution gas within the aspirator.

4.2.18 Soap Bubble Meter. Of an appropriate size to calibrate the critical orifices in the system.

4.2.19 Organic Concentration Analyzer. An FIA with a span value of 1.5 times the expected concentration as propane; however, other span values may be used if it can be demonstrated that they would provide more accurate measurements. The FIA instrument should be the same instrument used in the gaseous analyses adjusted with the same

fuel, combustion air, and sample back-pressure (flow rate) settings. The system shall be capable of meeting or exceeding the following specifications:

4.2.19.1 Zero Drift. Less than ±3.0 percent of the span value.

4.2.19.2 Calibration Drift. Less than ±3.0 percent of the span value.

4.2.19.3 Calibration Error. Less than ±5.0 percent of the calibration gas value.

4.2.20 Integrator/Data Acquisition System. An analog or digital device or computerized data acquisition system used to integrate the FIA response or compute the average response and record measurement data. The minimum data sampling frequency for computing average or integrated values is one measurement value every 5 seconds. The device shall be capable of recording average values at least once per minute.

4.2.21 Chart Recorder (Optional). A chart recorder or similar device is recommended to provide a continuous analog display of the measurement results during the liquid sample analysis.

5. Reagents and Standards

5.1 Calibration and Other Gases. Gases used for calibration, fuel, and combustion air (if required) are contained in compressed gas cylinders. All calibration gases shall be traceable to National Institute of Standards and Technology standards and shall be certified by the manufacturer to ±1 percent of the tag value. Additionally, the manufacturer of the cylinder should provide a recommended shelf life for each calibration gas cylinder over which the concentration does not change more than ±2 percent from the certified value. For calibration gas values not generally available, dilution systems calibrated using Method 205 may be used. Alternative methods for preparing calibration gas mixtures may be used with the approval of the Administrator.

5.1.1 Fuel. The FIA manufacturer's recommended fuel should be used. A 40 percent H2/60 percent He or 40 percent H_2/60 percent N_2 gas mixture is recommended to avoid an oxygen synergism effect that reportedly occurs when oxygen concentration varies significantly from a mean value. Other mixtures may be used provided the tester can demonstrate to the Administrator that there is no oxygen synergism effect.

5.1.2 Carrier Gas. High purity air with less than 1 ppm of organic material (as propane) or less than 0.1 percent of the span value, whichever is greater.

5.1.3 FIA Linearity Calibration Gases. Low-, mid-, and high-range gas mixture standards with nominal propane concentrations of 20–30, 45–55, and 70–80 percent of the span value in air, respectively. Other calibration values and other span values may be used if it can be shown to the Administrator's satisfaction that equally accurate measurements would be achieved.

5.1.4 System Calibration Gas. Gas mixture standard containing propane in air, approximating the undiluted VOC concentration expected for the liquid samples.

6. Sample Collection, Preservation and Storage

6.1 Samples must be collected in a manner that prevents or minimizes loss of volatile components and that does not contaminate the coating reservoir.

6.2 Collect a 100-ml or larger sample of the VOC containing liquid mixture at each application location at the beginning and end of each test run. A separate sample should be taken of each VOC containing liquid added to the application mixture during the test run. If a fresh drum is needed during the sampling run, then obtain a sample from the fresh drum.

6.3 When collecting the sample, ground the sample container to the coating drum. Fill the sample container as close to the rim as possible to minimize the amount of headspace.

6.4 After the sample is collected, seal the container so the sample cannot leak out or evaporate.

6.5 Label the container to clearly identify the contents.

7. Quality Control

7.1 Required instrument quality control parameters are found in the following sections:

7.1.1 The FIA system must be calibrated as specified in section 8.1.

7.1.2 The system drift check must be performed as specified in section 8.2.

7.2 Audits.

7.2.1 Audit Procedure. Concurrently, analyze the audit sample and a set of compliance samples in the same manner to evaluate the technique of the analyst and the standards preparation. The same analyst, analytical reagents, and analytical system shall be used both for compliance samples and the EPA audit sample. If this condition is met, auditing of subsequent compliance analyses for the same enforcement agency within 30 days is not required. An audit sample set may not be used to validate different sets of compliance samples under the jurisdiction of different enforcement agencies, unless prior arrangements are made with both enforcement agencies.

7.2.2 Audit Samples and Audit Sample Availability. Audit samples will be supplied only to enforcement agencies for compliance tests. The availability of audit samples may be obtained by writing: Source Test Audit Coordinator (STAC) (MD–77B), Quality Assurance Division, Atmospheric Research and

Exposure Assessment Laboratory, U.S. Environmental Protection Agency, Research Triangle Park, NC 27711 or by calling the STAC at (919) 541–7834. The request for the audit sample must be made at least 30 days prior to the scheduled compliance sample analysis.

7.2.3 Audit Results. Calculate the audit sample concentration according to the calculation procedure described in the audit instructions included with the audit sample. Fill in the audit sample concentration and the analyst's name on the audit response form included with the audit instructions. Send one copy to the EPA Regional Office or the appropriate enforcement agency, and a second copy to the STAC. The EPA Regional Office or the appropriate enforcement agency will report the results of the audit to the laboratory being audited. Include this response with the results of the compliance samples in relevant reports to the EPA Regional Office or the appropriate enforcement agency.

8. Calibration and Standardization

8.1 FIA Calibration and Linearity Check. Make necessary adjustments to the air and fuel supplies for the FIA and ignite the burner. Allow the FIA to warm up for the period recommended by the manufacturer. Inject a calibration gas into the measurement system and adjust the back-pressure regulator to the value required to achieve the flow rates specified by the manufacturer. Inject the zero- and the high-range calibration gases and adjust the analyzer calibration to provide the proper responses. Inject the low- and mid-range gases and record the responses of the measurement system. The calibration and linearity of the system are acceptable if the responses for all four gases are within 5 percent of the respective gas values. If the performance of the system is not acceptable, repair or adjust the system and repeat the linearity check. Conduct a calibration and linearity check after assembling the analysis system and after a major change is made to the system.

8.2 Systems Drift Checks. After each sample, repeat the system calibration checks in section 9.2.7 before any adjustments to the FIA or measurement system are made. If the zero or calibration drift exceeds ±3 percent of the span value, discard the result and repeat the analysis.

Alternatively, recalibrate the FIA as in section 8.1 and report the results using both sets of calibration data (i.e., data determined prior to the test period and data determined following the test period). The data that results in the lowest CE value shall be reported as the results for the test run.

8.3 Critical Orifice Calibration.

8.3.1 Each critical orifice must be calibrated at the specific operating conditions under which it will be used. Therefore, assemble all components of the liquid sample analysis system as shown in Figure 204A–3. A stopwatch is also required.

8.3.2 Turn on the sample oven, sample line, and water bath heaters, and allow the system to reach the proper operating temperature. Adjust the aspirator to a vacuum of 380 mm (15 in.) Hg vacuum. Measure the time required for one soap bubble to move a known distance and record barometric pressure.

8.3.3 Repeat the calibration procedure at a vacuum of 406 mm (16 in.) Hg and at 25-mm (1-in.) Hg intervals until three consecutive determinations provide the same flow rate. Calculate the critical flow rate for the orifice in ml/min at standard conditions. Record the vacuum necessary to achieve critical flow.

9. Procedure

9.1 Determination of Liquid Input Weight.

9.1.1 Weight Difference. Determine the amount of material introduced to the process as the weight difference of the feed material before and after each sampling run. In determining the total VOC containing liquid usage, account for:

(a) The initial (beginning) VOC containing liquid mixture.

(b) Any solvent added during the test run.

(c) Any coating added during the test run.

(d) Any residual VOC containing liquid mixture remaining at the end of the sample run.

9.1.1.1 Identify all points where VOC containing liquids are introduced to the process. To obtain an accurate measurement of VOC containing liquids, start with an empty fountain (if applicable). After completing the run, drain the liquid in the fountain back into the liquid drum (if possible) and weigh the drum again. Weigh the VOC containing liquids to ±0.5 percent of the total weight (full) or ±1.0 percent of the total weight of VOC containing liquid used during the sample run, whichever is less. If the residual liquid cannot be returned to the drum, drain the fountain into a preweighed empty drum to determine the final weight of the liquid.

9.1.1.2 If it is not possible to measure a single representative mixture, then weigh the various components separately (e.g., if solvent is added during the sampling run, weigh the solvent before it is added to the mixture). If a fresh drum of VOC containing liquid is needed during the run, then weigh both the empty drum and fresh drum.

9.1.2 Volume Measurement (Alternative). If direct weight measurements are not feasible, the tester may use volume meters or flow rate meters and density measurements to determine the weight of liquids used if it can be demonstrated that the technique produces results equivalent to the direct weight measurements. If a single representative

mixture cannot be measured, measure the components separately.

9.2 Determination of VOC Content in Input Liquids

9.2.1 Assemble the liquid VOC content analysis system as shown in Figure 204A–1.

9.2.2 Permanently identify all of the critical orifices that may be used. Calibrate each critical orifice under the expected operating conditions (i.e., sample vacuum and temperature) against a volume meter as described in section 8.3.

9.2.3 Label and tare the sample vessels (including the stoppers and caps) and the syringes.

9.2.4 Install an empty sample vessel and perform a leak test of the system. Close the carrier gas valve and atmospheric vent and evacuate the sample vessel to 250 mm (10 in.) Hg absolute or less using the aspirator. Close the toggle valve at the inlet to the aspirator and observe the vacuum for at least 1 minute. If there is any change in the sample pressure, release the vacuum, adjust or repair the apparatus as necessary, and repeat the leak test.

9.2.5 Perform the analyzer calibration and linearity checks according to the procedure in section 5.1. Record the responses to each of the calibration gases and the back-pressure setting of the FIA.

9.2.6 Establish the appropriate dilution ratio by adjusting the aspirator air supply or substituting critical orifices. Operate the aspirator at a vacuum of at least 25 mm (1 in.) Hg greater than the vacuum necessary to achieve critical flow. Select the dilution ratio so that the maximum response of the FIA to the sample does not exceed the high-range calibration gas.

9.2.7 Perform system calibration checks at two levels by introducing compressed gases at the inlet to the sample vessel while the aspirator and dilution devices are operating. Perform these checks using the carrier gas (zero concentration) and the system calibration gas. If the response to the carrier gas exceeds ±0.5 percent of span, clean or repair the apparatus and repeat the check. Adjust the dilution ratio as necessary to achieve the correct response to the upscale check, but do not adjust the analyzer calibration. Record the identification of the orifice, aspirator air supply pressure, FIA back-pressure, and the responses of the FIA to the carrier and system calibration gases.

9.2.8 After completing the above checks, inject the system calibration gas for approximately 10 minutes. Time the exact duration of the gas injection using a stopwatch. Determine the area under the FIA response curve and calculate the system response factor based on the sample gas flow rate, gas concentration, and the duration of the injection as compared to the integrated response using Equations 204A–2 and 204A–3.

9.2.9 Verify that the sample oven and sample line temperatures are 120± 5 °C and that the water bath temperature is 100± 5 °C.

9.2.10 Fill a tared syringe with approximately 1 g of the VOC containing liquid and weigh it. Transfer the liquid to a tared sample vessel. Plug the sample vessel to minimize sample loss. Weigh the sample vessel containing the liquid to determine the amount of sample actually received. Also, as a quality control check, weigh the empty syringe to determine the amount of material delivered. The two coating sample weights should agree within 0.02 g. If not, repeat the procedure until an acceptable sample is obtained.

9.2.11 Connect the vessel to the analysis system. Adjust the aspirator supply pressure to the correct value. Open the valve on the carrier gas supply to the sample vessel and adjust it to provide a slight excess flow to the atmospheric vent. As soon as the initial response of the FIA begins to decrease, immerse the sample vessel in the water bath. (Applying heat to the sample vessel too soon may cause the FIA response to exceed the calibrated range of the instrument and, thus, invalidate the analysis.)

9.2.12 Continuously measure and record the response of the FIA until all of the volatile material has been evaporated from the sample and the instrument response has returned to the baseline (i.e., response less than 0.5 percent of the span value). Observe the aspirator supply pressure, FIA back-pressure, atmospheric vent, and other system operating parameters during the run; repeat the analysis procedure if any of these parameters deviate from the values established during the system calibration checks in section 9.2.7. After each sample, perform the drift check described in section 8.2. If the drift check results are acceptable, calculate the VOC content of the sample using the equations in section 11.2. Alternatively, recalibrate the FIA as in section 8.1 and report the results using both sets of calibration data (i.e., data determined prior to the test period and data determined following the test period). The data that results in the lowest CE value shall be reported as the results for the test run. Integrate the area under the FIA response curve, or determine the average concentration response and the duration of sample analysis.

10. Data Analysis and Calculations

10.1 Nomenclature.

A_L=area under the response curve of the liquid sample, area count.

A_S=area under the response curve of the calibration gas, area count.

C_S=actual concentration of system calibration gas, ppm propane.

$K=1.830 \times 10^{-9}$ g/(ml-ppm).

L=total VOC content of liquid input, kg.

M_L=mass of liquid sample delivered to the sample vessel, g.

q = flow rate through critical orifice, ml/min.

RF=liquid analysis system response factor, g/area count.

θ_S=total gas injection time for system calibration gas during integrator calibration, min.

V_{Fj}=final VOC fraction of VOC containing liquid j.

V_{Ij}=initial VOC fraction of VOC containing liquid j.

V_{Aj}=VOC fraction of VOC containing liquid j added during the run.

V=VOC fraction of liquid sample.

W_{Fj}=weight of VOC containing liquid j remaining at end of the run, kg.

W_{Ij}=weight of VOC containing liquid j at beginning of the run, kg.

W_{Aj}=weight of VOC containing liquid j added during the run, kg.

10.2 Calculations

10.2.1 Total VOC Content of the Input VOC Containing Liquid.

$$L = \sum_{j=1}^{n} V_{rj} W_{rj} - \sum_{j=1}^{n} V_{Fj} W_{Fj} + \sum_{j=1}^{n} V_{Aj} W_{Aj} \qquad \text{Eq. 204A-1}$$

10.2.2 Liquid Sample Analysis System Response Factor for Systems Using Integrators, Grams/Area Count.

$$RF = \frac{C_S q \theta_S K}{A_S} \qquad \text{Eq. 204A-2}$$

10.2.3 VOC Content of the Liquid Sample.

$$V = \frac{A_L RF}{M_L} \qquad \text{Eq. 204A-3}$$

11. Method Performance

The measurement uncertainties are estimated for each VOC containing liquid as follows: W = ±2.0 percent and V = ±4.0 percent. Based on these numbers, the probable uncertainty for L is estimated at about ±4.5 percent for each VOC containing liquid.

12. Diagrams

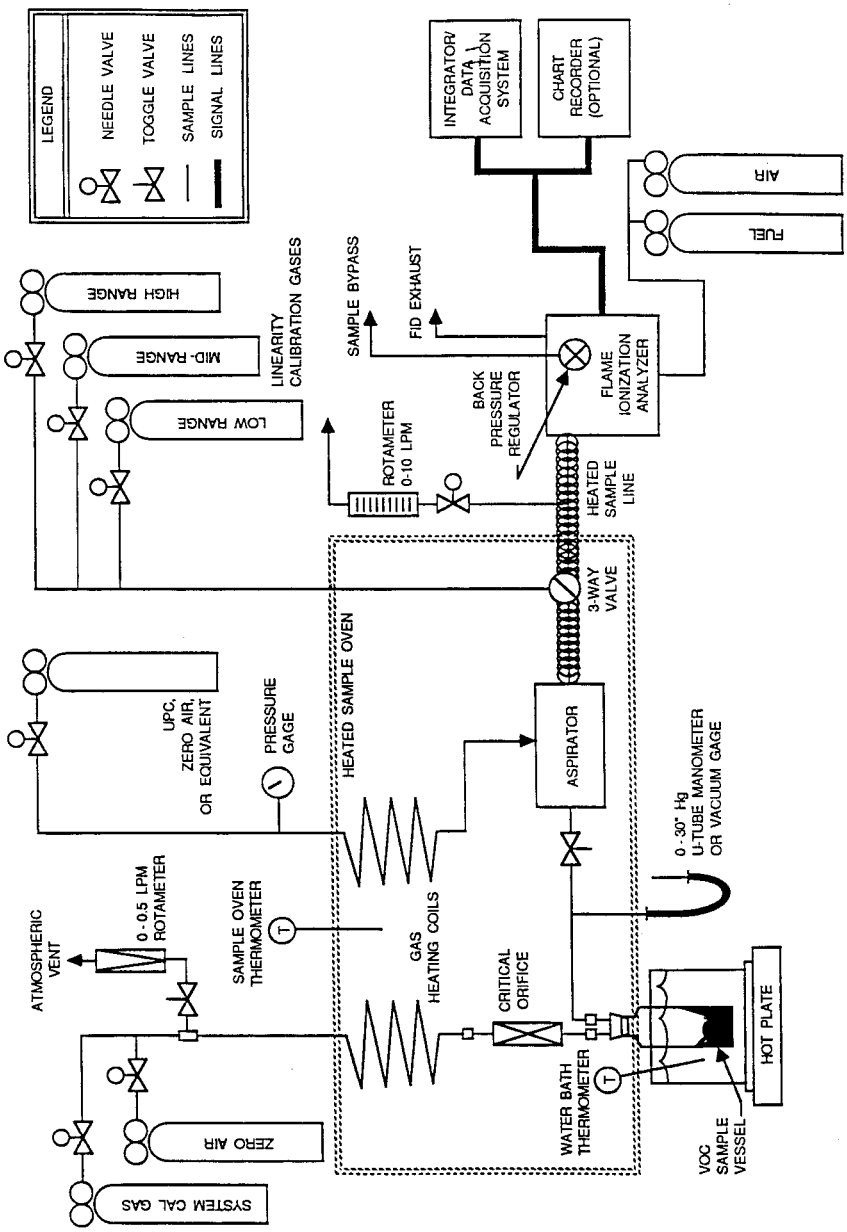

Figure 204A-1. Liquid analysis sample system.

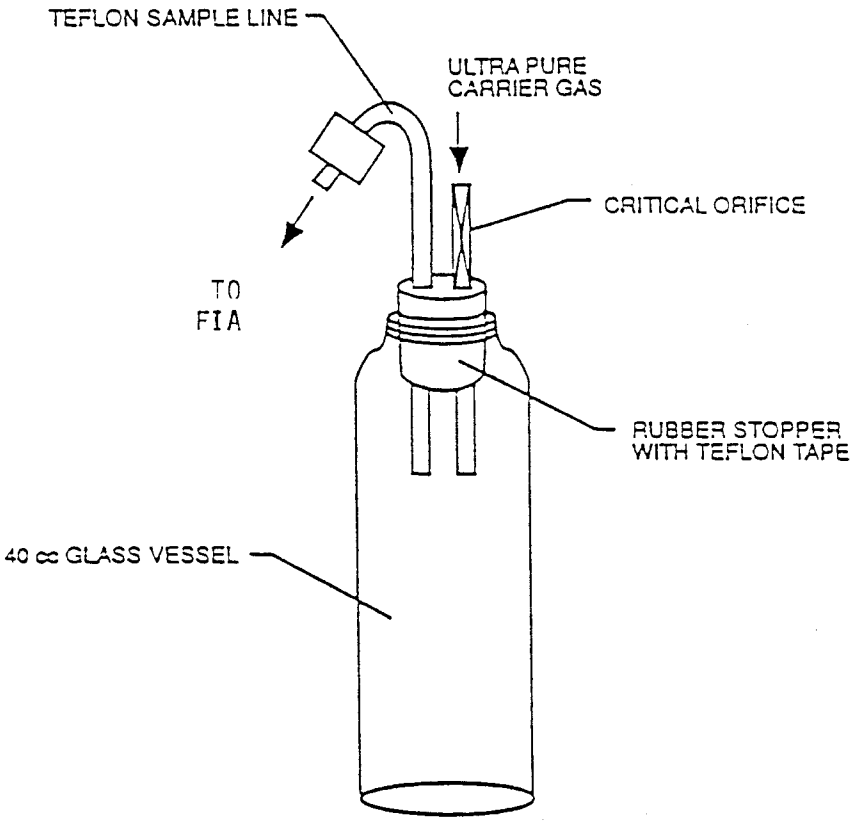

Figure 204A-2. VOC sampling vessel.

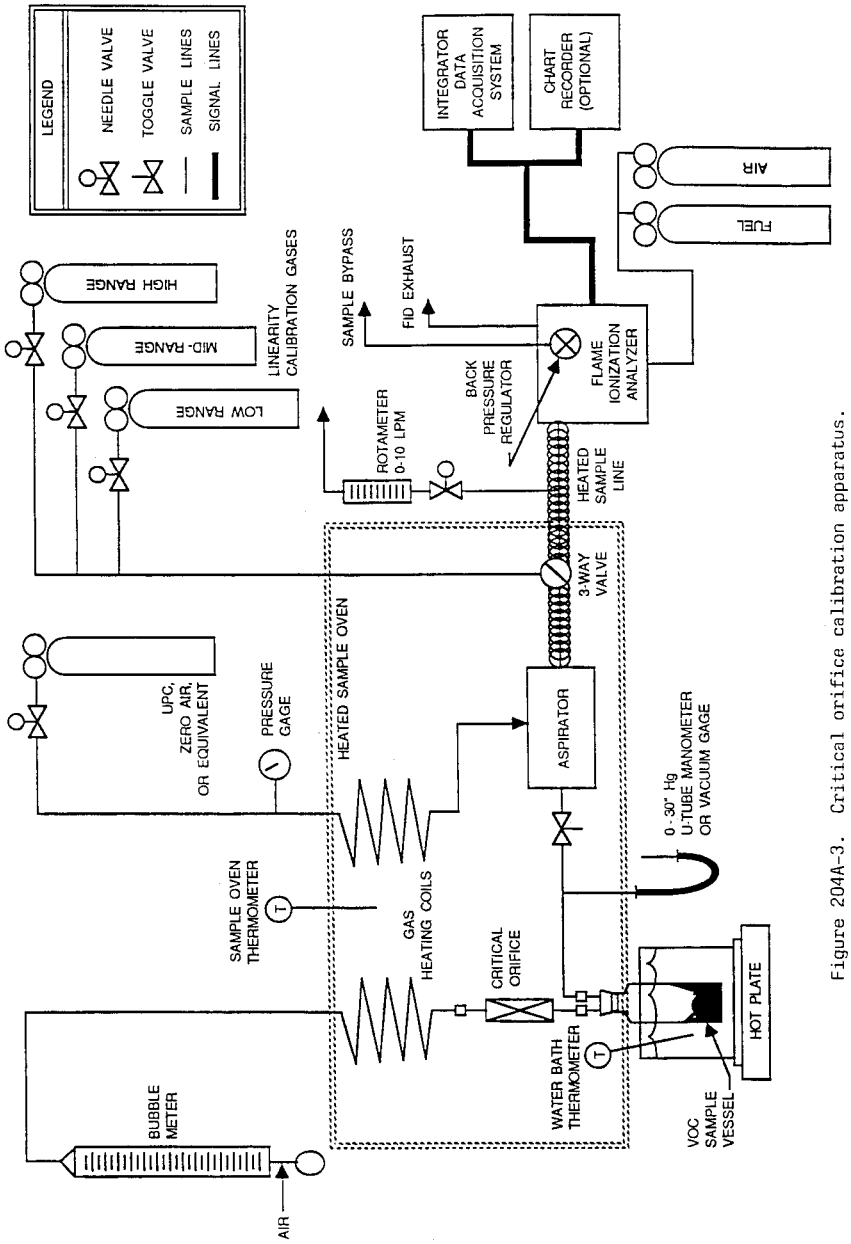

Figure 204A-3. Critical orifice calibration apparatus.

METHOD 204B—VOLATILE ORGANIC COMPOUNDS EMISSIONS IN CAPTURED STREAM

1. Scope and Application

1.1 Applicability. This procedure is applicable for determining the volatile organic compounds (VOC) content of captured gas streams. It is intended to be used in the development of a gas/gas protocol for determining VOC capture efficiency (CE) for surface coating and printing operations. The procedure may not be acceptable in certain site-specific situations [e.g., when: (1) direct-fired heaters or other circumstances affect the quantity of VOC at the control device inlet; and (2) particulate organic aerosols are formed in the process and are present in the captured emissions].

1.2 Principle. The amount of VOC captured (G) is calculated as the sum of the products of the VOC content (C_{Gj}), the flow rate (Q_{Gj}), and the sample time (Θ_C) from each captured emissions point.

1.3 Sampling Requirements. A CE test shall consist of at least three sampling runs. Each run shall cover at least one complete production cycle, but shall be at least 3 hours long. The sampling time for each run need not exceed 8 hours, even if the production cycle has not been completed. Alternative sampling times may be used with the approval of the Administrator.

2. Summary of Method

A gas sample is extracted from the source though a heated sample line and, if necessary, a glass fiber filter to a flame ionization analyzer (FIA).

3. Safety

Because this procedure is often applied in highly explosive areas, caution and care should be exercised in choosing, installing, and using the appropriate equipment.

4. Equipment and Supplies

Mention of trade names or company products does not constitute endorsement. All gas concentrations (percent, ppm) are by volume, unless otherwise noted.

4.1 Gas VOC Concentration. A schematic of the measurement system is shown in Figure 204B–1. The main components are as follows:

4.1.1 Sample Probe. Stainless steel or equivalent. The probe shall be heated to prevent VOC condensation.

4.1.2 Calibration Valve Assembly. Three-way valve assembly at the outlet of the sample probe to direct the zero and calibration gases to the analyzer. Other methods, such as quick-connect lines, to route calibration gases to the outlet of the sample probe are acceptable.

4.1.3 Sample Line. Stainless steel or Teflon tubing to transport the sample gas to the analyzer. The sample line must be heated to prevent condensation.

4.1.4 Sample Pump. A leak-free pump, to pull the sample gas through the system at a flow rate sufficient to minimize the response time of the measurement system. The components of the pump that contact the gas stream shall be constructed of stainless steel or Teflon. The sample pump must be heated to prevent condensation.

4.1.5 Sample Flow Rate Control. A sample flow rate control valve and rotameter, or equivalent, to maintain a constant sampling rate within 10 percent. The flow rate control valve and rotameter must be heated to prevent condensation. A control valve may also be located on the sample pump bypass loop to assist in controlling the sample pressure and flow rate.

4.1.6 Organic Concentration Analyzer. An FIA with a span value of 1.5 times the expected concentration as propane; however, other span values may be used if it can be demonstrated to the Administrator's satisfaction that they would provide equally accurate measurements. The system shall be capable of meeting or exceeding the following specifications:

4.1.6.1 Zero Drift. Less than ±3.0 percent of the span value.

4.1.6.2 Calibration Drift. Less than ±3.0 percent of the span value.

4.1.6.3 Calibration Error. Less than ±5.0 percent of the calibration gas value.

4.1.6.4 Response Time. Less than 30 seconds.

4.1.7 Integrator/Data Acquisition System. An analog or digital device, or computerized data acquisition system used to integrate the FIA response or compute the average response and record measurement data. The minimum data sampling frequency for computing average or integrated values is one measurement value every 5 seconds. The device shall be capable of recording average values at least once per minute.

4.2 Captured Emissions Volumetric Flow Rate.

4.2.1 Method 2 or 2A Apparatus. For determining volumetric flow rate.

4.2.2 Method 3 Apparatus and Reagents. For determining molecular weight of the gas stream. An estimate of the molecular weight of the gas stream may be used if approved by the Administrator.

4.2.3 Method 4 Apparatus and Reagents. For determining moisture content, if necessary.

5. Reagents and Standards

5.1 Calibration and Other Gases. Gases used for calibration, fuel, and combustion air (if required) are contained in compressed gas cylinders. All calibration gases shall be traceable to National Institute of Standards and Technology standards and shall be certified by the manufacturer to ±1 percent of

the tag value. Additionally, the manufacturer of the cylinder should provide a recommended shelf life for each calibration gas cylinder over which the concentration does not change more than ±2 percent from the certified value. For calibration gas values not generally available, dilution systems calibrated using Method 205 may be used. Alternative methods for preparing calibration gas mixtures may be used with the approval of the Administrator.

5.1.1 Fuel. The FIA manufacturer's recommended fuel should be used. A 40 percent H_2/60 percent He or 40 percent H_2/60 percent N_2 gas mixture is recommended to avoid an oxygen synergism effect that reportedly occurs when oxygen concentration varies significantly from a mean value. Other mixtures may be used provided the tester can demonstrate to the Administrator that there is no oxygen synergism effect.

5.1.2 Carrier Gas. High purity air with less than 1 ppm of organic material (as propane or carbon equivalent) or less than 0.1 percent of the span value, whichever is greater.

5.1.3 FIA Linearity Calibration Gases. Low-, mid-, and high-range gas mixture standards with nominal propane concentrations of 20–30, 45–55, and 70–80 percent of the span value in air, respectively. Other calibration values and other span values may be used if it can be shown to the Administrator's satisfaction that equally accurate measurements would be achieved.

5.2 Particulate Filter. An in-stack or an out-of-stack glass fiber filter is recommended if exhaust gas particulate loading is significant. An out-of-stack filter must be heated to prevent any condensation unless it can be demonstrated that no condensation occurs.

6. Quality Control

6.1 Required instrument quality control parameters are found in the following sections:

6.1.1 The FIA system must be calibrated as specified in section 7.1.

6.1.2 The system drift check must be performed as specified in section 7.2.

6.1.3 The system check must be conducted as specified in section 7.3.

6.2 Audits.

6.2.1 Analysis Audit Procedure. Immediately before each test, analyze an audit cylinder as described in section 7.2. The analysis audit must agree with the audit cylinder concentration within 10 percent.

6.2.2 Audit Samples and Audit Sample Availability. Audit samples will be supplied only to enforcement agencies for compliance tests. The availability of audit samples may be obtained by writing: Source Test Audit Coordinator (STAC) (MD–77B), Quality Assurance Division, Atmospheric Research and Exposure Assessment Labortory, U.S. Environmental Protection Agency, Research Triangle Park, NC 27711 or by calling the STAC at (919) 541–7834. The request for the audit sample must be made at least 30 days prior to the scheduled compliance sample analysis.

6.2.3 Audit Results. Calculate the audit sample concentration according to the calculation procedure described in the audit instructions included with the audit sample. Fill in the audit sample concentration and the analyst's name on the audit response form included with the audit instructions. Send one copy to the EPA Regional Office or the appropriate enforcement agency, and a second copy to the STAC. The EPA Regional Office or the appropriate enforcement agency will report the results of the audit to the laboratory being audited. Include this response with the results of the compliance samples in relevant reports to the EPA Regional Office or the appropriate enforcement agency.

7. Calibration and Standardization

7.1 FIA Calibration and Linearity Check. Make necessary adjustments to the air and fuel supplies for the FIA and ignite the burner. Allow the FIA to warm up for the period recommended by the manufacturer. Inject a calibration gas into the measurement system and adjust the back-pressure regulator to the value required to achieve the flow rates specified by the manufacturer. Inject the zero-and the high-range calibration gases and adjust the analyzer calibration to provide the proper responses. Inject the low- and mid-range gases and record the responses of the measurement system. The calibration and linearity of the system are acceptable if the responses for all four gases are within 5 percent of the respective gas values. If the performance of the system is not acceptable, repair or adjust the system and repeat the linearity check. Conduct a calibration and linearity check after assembling the analysis system and after a major change is made to the system.

7.2 Systems Drift Checks. Select the calibration gas that most closely approximates the concentration of the captured emissions for conducting the drift checks. Introduce the zero and calibration gases at the calibration valve assembly and verify that the appropriate gas flow rate and pressure are present at the FIA. Record the measurement system responses to the zero and calibration gases. The performance of the system is acceptable if the difference between the drift check measurement and the value obtained in section 7.1 is less than 3 percent of the span value. Alternatively, recalibrate the FIA as in section 7.1 and report the results using both sets of calibration data (i.e., data determined prior to the test period and data determined following the test period). The data that results in the lowest CE value

shall be reported as the results for the test run. Conduct the system drift checks at the end of each run.

7.3 System Check. Inject the high-range calibration gas at the inlet of the sampling probe and record the response. The performance of the system is acceptable if the measurement system response is within 5 percent of the value obtained in section 7.1 for the high-range calibration gas. Conduct a system check before and after each test run.

8. Procedure

8.1. Determination of Volumetric Flow Rate of Captured Emissions.

8.1.1 Locate all points where emissions are captured from the affected facility. Using Method 1, determine the sampling points. Be sure to check each site for cyclonic or swirling flow.

8.1.2 Measure the velocity at each sampling site at least once every hour during each sampling run using Method 2 or 2A.

8.2 Determination of VOC Content of Captured Emissions.

8.2.1 Analysis Duration. Measure the VOC responses at each captured emissions point during the entire test run or, if applicable, while the process is operating. If there are multiple captured emission locations, design a sampling system to allow a single FIA to be used to determine the VOC responses at all sampling locations.

8.2.2 Gas VOC Concentration.

8.2.2.1 Assemble the sample train as shown in Figure 204B–1. Calibrate the FIA according to the procedure in section 7.1.

8.2.2.2 Conduct a system check according to the procedure in section 7.3.

8.2.2.3 Install the sample probe so that the probe is centrally located in the stack, pipe, or duct, and is sealed tightly at the stack port connection.

8.2.2.4 Inject zero gas at the calibration valve assembly. Allow the measurement system response to reach zero. Measure the system response time as the time required for the system to reach the effluent concentration after the calibration valve has been returned to the effluent sampling position.

8.2.2.5 Conduct a system check before, and a system drift check after, each sampling run according to the procedures in sections 7.2 and 7.3. If the drift check following a run indicates unacceptable performance (see section 7.3), the run is not valid. Alternatively, recalibrate the FIA as in section 7.1 and report the results using both sets of calibration data (i.e., data determined prior to the test period and data determined following the test period). The data that results in the lowest CE value shall be reported as the results for the test run. The tester may elect to perform system drift checks during the run not to exceed one drift check per hour.

8.2.2.6 Verify that the sample lines, filter, and pump temperatures are 120±5 °C.

8.2.2.7 Begin sampling at the start of the test period and continue to sample during the entire run. Record the starting and ending times and any required process information as appropriate. If multiple captured emission locations are sampled using a single FIA, sample at each location for the same amount of time (e.g., 2 minutes) and continue to switch from one location to another for the entire test run. Be sure that total sampling time at each location is the same at the end of the test run. Collect at least four separate measurements from each sample point during each hour of testing. Disregard the measurements at each sampling location until two times the response time of the measurement system has elapsed. Continue sampling for at least 1 minute and record the concentration measurements.

8.2.3 Background Concentration.

NOTE: Not applicable when the building is used as the temporary total enclosure (TTE).

8.2.3.1 Locate all natural draft openings (NDO's) of the TTE. A sampling point shall be at the center of each NDO, unless otherwise specified by the Administrator. If there are more than six NDO's, choose six sampling points evenly spaced among the NDO's.

8.2.3.2 Assemble the sample train as shown in Figure 204B–2. Calibrate the FIA and conduct a system check according to the procedures in sections 7.1 and 7.3.

NOTE: This sample train shall be separate from the sample train used to measure the captured emissions.

8.2.3.3 Position the probe at the sampling location.

8.2.3.4 Determine the response time, conduct the system check, and sample according to the procedures described in sections 8.2.2.4 through 8.2.2.7.

8.2.4 Alternative Procedure. The direct interface sampling and analysis procedure described in section 7.2 of Method 18 may be used to determine the gas VOC concentration. The system must be designed to collect and analyze at least one sample every 10 minutes. If the alternative procedure is used to determine the VOC concentration of the captured emissions, it must also be used to determine the VOC concentration of the uncaptured emissions.

9. Data Analysis and Calculations

9.1 Nomenclature.

A_i=area of NDO i, ft^2.

A_N=total area of all NDO's in the enclosure, ft^2.

C_{Bi}=corrected average VOC concentration of background emissions at point i, ppm propane.

C_B=average background concentration, ppm propane.

C_{Gj}=corrected average VOC concentration of captured emissions at point j, ppm propane.
C_{DH}=average measured concentration for the drift check calibration gas, ppm propane.
C_{DO}=average system drift check concentration for zero concentration gas, ppm propane.
C_H=actual concentration of the drift check calibration gas, ppm propane.
C_i=uncorrected average background VOC concentration measured at point i, ppm propane.
C_j=uncorrected average VOC concentration measured at point j, ppm propane.
G=total VOC content of captured emissions, kg.
K_1=1.830×10^{-6} kg/(m^3-ppm).
n=number of measurement points.
Q_{Gj}=average effluent volumetric flow rate corrected to standard conditions at captured emissions point j, m^3/min.
Θ_C=total duration of captured emissions.

9.2 Calculations.

9.2.1 Total VOC Captured Emissions.

$$G = \sum_{j=1}^{n} \left(C_{Gj} - C_B\right) Q_{Gj} \theta_C K_1 \quad \text{Eq. 204B-1}$$

9.2.2 VOC Concentration of the Captured Emissions at Point j.

$$C_{Gj} = \left(C_j - C_{DO}\right) \frac{C_H}{C_{DH} - C_{DO}} \quad \text{Eq. 204B-2}$$

9.2.3 Background VOC Concentration at Point i.

$$C_{Bi} = \left(C_i - C_{DO}\right) \frac{C_H}{C_{DH} - C_{DO}} \quad \text{Eq. 204B-3}$$

9.2.4 Average Background Concentration.

$$C_B = \frac{\sum_{i=1}^{n} C_{Bi} A_i}{A_N} \quad \text{Eq. 204B-4}$$

NOTE: If the concentration at each point is within 20 percent of the average concentration of all points, then use the arithmetic average.

10. Method Performance

The measurement uncertainties are estimated for each captured or uncaptured emissions point as follows: Q_{Gj}=±5.5 percent and C_{Gj}=±5.0 percent. Based on these numbers, the probable uncertainty for G is estimated at about ±7.4 percent.

11. Diagrams

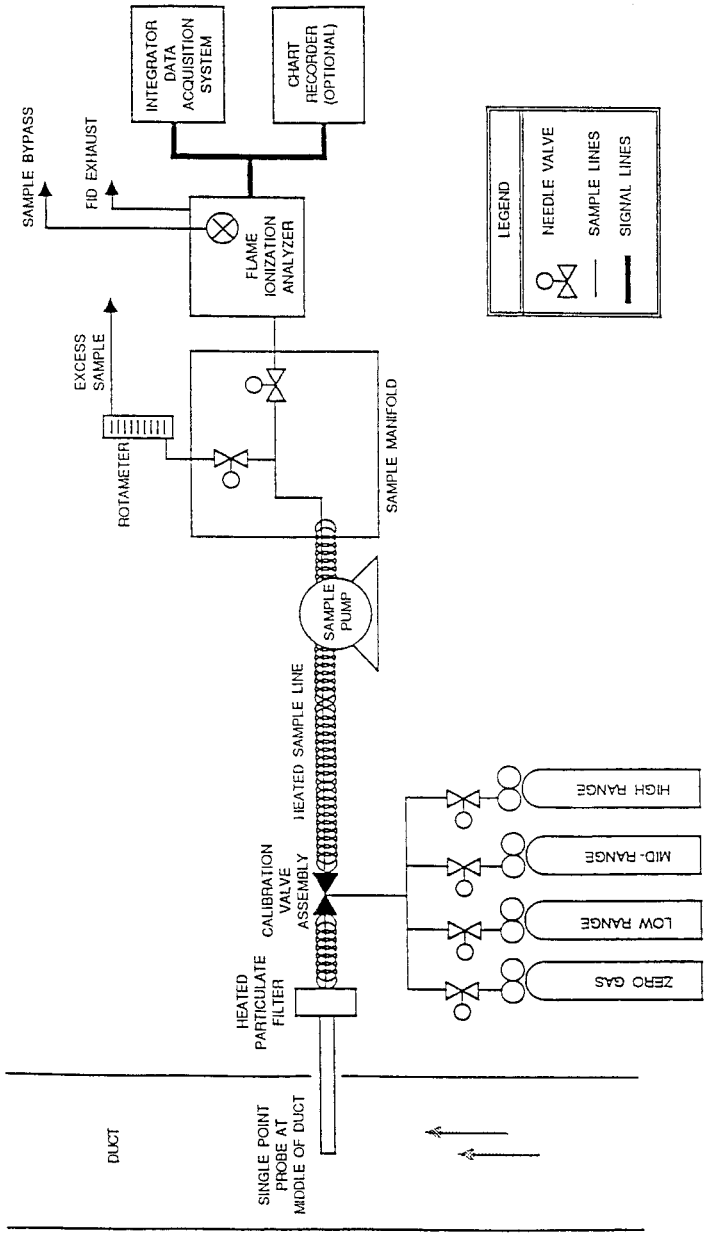

Figure 204B-1. Gas VOC concentration measurement system.

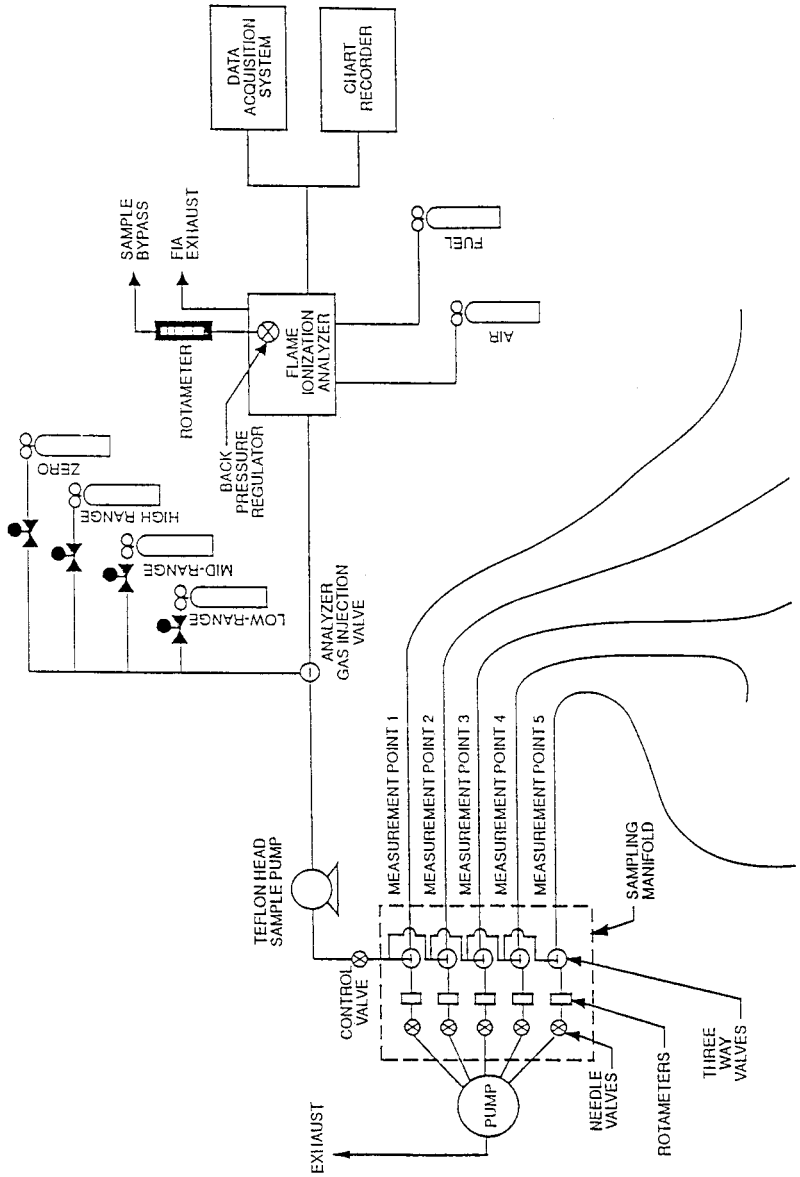

Figure 204B-2. Background measurement system.

METHOD 204C—VOLATILE ORGANIC COMPOUNDS EMISSIONS IN CAPTURED STREAM (DILUTION TECHNIQUE)

1. Scope and Application

1.1 Applicability. This procedure is applicable for determining the volatile organic compounds (VOC) content of captured gas streams. It is intended to be used in the development of a gas/gas protocol in which uncaptured emissions are also measured for determining VOC capture efficiency (CE) for surface coating and printing operations. A dilution system is used to reduce the VOC concentration of the captured emissions to about the same concentration as the uncaptured emissions. The procedure may not be acceptable in certain site-specific situations [e.g., when: (1) direct-fired heaters or other circumstances affect the quantity of VOC at the control device inlet; and (2) particulate organic aerosols are formed in the process and are present in the captured emissions].

1.2 Principle. The amount of VOC captured (G) is calculated as the sum of the products of the VOC content (C_{Gj}), the flow rate (Q_{Gj}), and the sampling time (Θ_C) from each captured emissions point.

1.3 Sampling Requirements. A CE test shall consist of at least three sampling runs. Each run shall cover at least one complete production cycle, but shall be at least 3 hours long. The sampling time for each run need not exceed 8 hours, even if the production cycle has not been completed. Alternative sampling times may be used with the approval of the Administrator.

2. Summary of Method

A gas sample is extracted from the source using an in-stack dilution probe through a heated sample line and, if necessary, a glass fiber filter to a flame ionization analyzer (FIA). The sample train contains a sample gas manifold which allows multiple points to be sampled using a single FIA.

3. Safety

Because this procedure is often applied in highly explosive areas, caution and care should be exercised in choosing, installing, and using the appropriate equipment.

4. Equipment and Supplies

Mention of trade names or company products does not constitute endorsement. All gas concentrations (percent, ppm) are by volume, unless otherwise noted.

4.1 Gas VOC Concentration. A schematic of the measurement system is shown in Figure 204C–1. The main components are as follows:

4.1.1 Dilution System. A Kipp in-stack dilution probe and controller or similar device may be used. The dilution rate may be changed by substituting different critical orifices or adjustments of the aspirator supply pressure. The dilution system shall be heated to prevent VOC condensation. Note: An out-of-stack dilution device may be used.

4.1.2 Calibration Valve Assembly. Three-way valve assembly at the outlet of the sample probe to direct the zero and calibration gases to the analyzer. Other methods, such as quick-connect lines, to route calibration gases to the outlet of the sample probe are acceptable.

4.1.3 Sample Line. Stainless steel or Teflon tubing to transport the sample gas to the analyzer. The sample line must be heated to prevent condensation.

4.1.4 Sample Pump. A leak-free pump, to pull the sample gas through the system at a flow rate sufficient to minimize the response time of the measurement system. The components of the pump that contact the gas stream shall be constructed of stainless steel or Teflon. The sample pump must be heated to prevent condensation.

4.1.5 Sample Flow Rate Control. A sample flow rate control valve and rotameter, or equivalent, to maintain a constant sampling rate within 10 percent. The flow control valve and rotameter must be heated to prevent condensation. A control valve may also be located on the sample pump bypass loop to assist in controlling the sample pressure and flow rate.

4.1.6 Sample Gas Manifold. Capable of diverting a portion of the sample gas stream to the FIA, and the remainder to the bypass discharge vent. The manifold components shall be constructed of stainless steel or Teflon. If captured or uncaptured emissions are to be measured at multiple locations, the measurement system shall be designed to use separate sampling probes, lines, and pumps for each measurement location and a common sample gas manifold and FIA. The sample gas manifold and connecting lines to the FIA must be heated to prevent condensation.

NOTE: Depending on the number of sampling points and their location, it may not be possible to use only one FIA. However to reduce the effect of calibration error, the number of FIA's used during a test should be keep as small as possible.

4.1.7 Organic Concentration Analyzer. An FIA with a span value of 1.5 times the expected concentration as propane; however, other span values may be used if it can be demonstrated to the Administrator's satisfaction that they would provide equally accurate measurements. The system shall be capable of meeting or exceeding the following specifications:

4.1.7.1 Zero Drift. Less than ±3.0 percent of the span value.

4.1.7.2 Calibration Drift. Less than ±3.0 percent of the span value.

4.1.7.3 Calibration Error. Less than ±5.0 percent of the calibration gas value.

4.1.7.4 Response Time. Less than 30 seconds.

4.1.8 Integrator/Data Acquisition System. An analog or digital device or computerized data acquisition system used to integrate the FIA response or compute the average response and record measurement data. The minimum data sampling frequency for computing average or integrated values is one measurement value every 5 seconds. The device shall be capable of recording average values at least once per minute.

4.2 Captured Emissions Volumetric Flow Rate.

4.2.1 Method 2 or 2A Apparatus. For determining volumetric flow rate.

4.2.2 Method 3 Apparatus and Reagents. For determining molecular weight of the gas stream. An estimate of the molecular weight of the gas stream may be used if approved by the Administrator.

4.2.3 Method 4 Apparatus and Reagents. For determining moisture content, if necessary.

5. Reagents and Standards

5.1 Calibration and Other Gases. Gases used for calibration, fuel, and combustion air (if required) are contained in compressed gas cylinders. All calibration gases shall be traceable to National Institute of Standards and Technology standards and shall be certified by the manufacturer to ±1 percent of the tag value. Additionally, the manufacturer of the cylinder should provide a recommended shelf life for each calibration gas cylinder over which the concentration does not change more than ±2 percent from the certified value. For calibration gas values not generally available, dilution systems calibrated using Method 205 may be used. Alternative methods for preparing calibration gas mixtures may be used with the approval of the Administrator.

5.1.1 Fuel. The FIA manufacturer's recommended fuel should be used. A 40 percent H_2/60 percent He or 40 percent H_2/60 percent N_2 gas mixture is recommended to avoid an oxygen synergism effect that reportedly occurs when oxygen concentration varies significantly from a mean value. Other mixtures may be used provided the tester can demonstrate to the Administrator that there is no oxygen synergism effect

5.1.2 Carrier Gas and Dilution Air Supply. High purity air with less than 1 ppm of organic material (as propane or carbon equivalent), or less than 0.1 percent of the span value, whichever is greater.

5.1.3 FIA Linearity Calibration Gases. Low-, mid-, and high-range gas mixture standards with nominal propane concentrations of 20–30, 45–55, and 70–80 percent of the span value in air, respectively. Other calibration values and other span values may be used if it can be shown to the Administrator's satisfaction that equally accurate measurements would be achieved.

5.1.4 Dilution Check Gas. Gas mixture standard containing propane in air, approximately half the span value after dilution.

5.2 Particulate Filter. An in-stack or an out-of-stack glass fiber filter is recommended if exhaust gas particulate loading is significant. An out-of-stack filter must be heated to prevent any condensation unless it can be demonstrated that no condensation occurs.

6. Quality Control

6.1 Required instrument quality control parameters are found in the following sections:

6.1.1 The FIA system must be calibrated as specified in section 7.1.

6.1.2 The system drift check must be performed as specified in section 7.2.

6.1.3 The dilution factor must be determined as specified in section 7.3.

6.1.4 The system check must be conducted as specified in section 7.4.

6.2 Audits.

6.2.1 Analysis Audit Procedure. Immediately before each test, analyze an audit cylinder as described in section 7.2. The analysis audit must agree with the audit cylinder concentration within 10 percent.

6.2.2 Audit Samples and Audit Sample Availability. Audit samples will be supplied only to enforcement agencies for compliance tests. The availability of audit samples may be obtained by writing: Source Test Audit Coordinator (STAC) (MD–77B), Quality Assurance Division, Atmospheric Research and Exposure Assessment Laboratory, U.S. Environmental Protection Agency, Research Triangle Park, NC 27711 or by calling the STAC at (919) 541–7834. The request for the audit sample must be made at least 30 days prior to the scheduled compliance sample analysis.

6.2.3 Audit Results. Calculate the audit sample concentration according to the calculation procedure described in the audit instructions included with the audit sample. Fill in the audit sample concentration and the analyst's name on the audit response form included with the audit instructions. Send one copy to the EPA Regional Office or the appropriate enforcement agency, and a second copy to the STAC. The EPA Regional Office or the appropriate enforcement agency will report the results of the audit to the laboratory being audited. Include this response with the results of the compliance samples in relevant reports to the EPA Regional Office or the appropriate enforcement agency.

7. Calibration and Standardization

7.1 FIA Calibration and Linearity Check. Make necessary adjustments to the air and fuel supplies for the FIA and ignite the burner. Allow the FIA to warm up for the period recommended by the manufacturer. Inject a calibration gas into the measurement system after the dilution system and adjust the back-pressure regulator to the value required to achieve the flow rates specified by the manufacturer. Inject the zero-and the high-range calibration gases and adjust the analyzer calibration to provide the proper responses. Inject the low-and mid-range gases and record the responses of the measurement system. The calibration and linearity of the system are acceptable if the responses for all four gases are within 5 percent of the respective gas values. If the performance of the system is not acceptable, repair or adjust the system and repeat the linearity check. Conduct a calibration and linearity check after assembling the analysis system and after a major change is made to the system.

7.2 Systems Drift Checks. Select the calibration gas that most closely approximates the concentration of the diluted captured emissions for conducting the drift checks. Introduce the zero and calibration gases at the calibration valve assembly, and verify that the appropriate gas flow rate and pressure are present at the FIA. Record the measurement system responses to the zero and calibration gases. The performance of the system is acceptable if the difference between the drift check measurement and the value obtained in section 7.1 is less than 3 percent of the span value. Alternatively, recalibrate the FIA as in section 7.1 and report the results using both sets of calibration data (i.e., data determined prior to the test period and data determined following the test period). The data that results in the lowest CE value shall be reported as the results for the test run. Conduct the system drift check at the end of each run.

7.3 Determination of Dilution Factor. Inject the dilution check gas into the measurement system before the dilution system and record the response. Calculate the dilution factor using Equation 204C–3.

7.4 System Check. Inject the high-range calibration gas at the inlet to the sampling probe while the dilution air is turned off. Record the response. The performance of the system is acceptable if the measurement system response is within 5 percent of the value obtained in section 7.1 for the high-range calibration gas. Conduct a system check before and after each test run.

8. Procedure

8.1 Determination of Volumetric Flow Rate of Captured Emissions

8.1.1 Locate all points where emissions are captured from the affected facility. Using Method 1, determine the sampling points. Be sure to check each site for cyclonic or swirling flow.

8.2.2 Measure the velocity at each sampling site at least once every hour during each sampling run using Method 2 or 2A.

8.2 Determination of VOC Content of Captured Emissions

8.2.1 Analysis Duration. Measure the VOC responses at each captured emissions point during the entire test run or, if applicable, while the process is operating. If there are multiple captured emissions locations, design a sampling system to allow a single FIA to be used to determine the VOC responses at all sampling locations.

8.2.2 Gas VOC Concentration.

8.2.2.1 Assemble the sample train as shown in Figure 204C–1. Calibrate the FIA according to the procedure in section 7.1.

8.2.2.2 Set the dilution ratio and determine the dilution factor according to the procedure in section 7.3.

8.2.2.3 Conduct a system check according to the procedure in section 7.4.

8.2.2.4 Install the sample probe so that the probe is centrally located in the stack, pipe, or duct, and is sealed tightly at the stack port connection.

8.2.2.5 Inject zero gas at the calibration valve assembly. Measure the system response time as the time required for the system to reach the effluent concentration after the calibration valve has been returned to the effluent sampling position.

8.2.2.6 Conduct a system check before, and a system drift check after, each sampling run according to the procedures in sections 7.2 and 7.4. If the drift check following a run indicates unacceptable performance (see section 7.4), the run is not valid. Alternatively, recalibrate the FIA as in section 7.1 and report the results using both sets of calibration data (i.e., data determined prior to the test period and data determined following the test period). The data that results in the lowest CE value shall be reported as the results for the test run. The tester may elect to perform system drift checks during the run not to exceed one drift check per hour.

8.2.2.7 Verify that the sample lines, filter, and pump temperatures are 120 ±5 °C.

8.2.2.8 Begin sampling at the start of the test period and continue to sample during the entire run. Record the starting and ending times and any required process information as appropriate. If multiple captured emission locations are sampled using a single FIA, sample at each location for the same amount of time (e.g., 2 min.) and continue to switch from one location to another for the entire test run. Be sure that total sampling time at each location is the same at the end of the test run. Collect at least four separate measurements from each sample point during each hour of testing. Disregard the measurements at each sampling

location until two times the response time of the measurement system has elapsed. Continue sampling for at least 1 minute and record the concentration measurements.

8.2.3 Background Concentration.

NOTE: Not applicable when the building is used as the temporary total enclosure (TTE).

8.2.3.1 Locate all natural draft openings (NDO's) of the TTE. A sampling point shall be at the center of each NDO, unless otherwise approved by the Administrator. If there are more than six NDO's, choose six sampling points evenly spaced among the NDO's.

8.2.3.2 Assemble the sample train as shown in Figure 204C–2. Calibrate the FIA and conduct a system check according to the procedures in sections 7.1 and 7.4.

8.2.3.3 Position the probe at the sampling location.

8.2.3.4 Determine the response time, conduct the system check, and sample according to the procedures described in sections 8.2.2.4 through 8.2.2.8.

8.2.4 Alternative Procedure. The direct interface sampling and analysis procedure described in section 7.2 of Method 18 may be used to determine the gas VOC concentration. The system must be designed to collect and analyze at least one sample every 10 minutes. If the alternative procedure is used to determine the VOC concentration of the captured emissions, it must also be used to determine the VOC concentration of the uncaptured emissions.

9. Data Analysis and Calculations

9.1 Nomenclature.

A_i=area of NDO i, ft^2.

A_N=total area of all NDO's in the enclosure, ft^2.

C_A = actual concentration of the dilution check gas, ppm propane.

C_{Bi}=corrected average VOC concentration of background emissions at point i, ppm propane.

C_B=average background concentration, ppm propane.

C_{DH}=average measured concentration for the drift check calibration gas, ppm propane.

C_{D0}=average system drift check concentration for zero concentration gas, ppm propane.

C_H=actual concentration of the drift check calibration gas, ppm propane.

C_i=uncorrected average background VOC concentration measured at point i, ppm propane.

C_j=uncorrected average VOC concentration measured at point j, ppm propane.

C_M=measured concentration of the dilution check gas, ppm propane.

DF=dilution factor.

G=total VOC content of captured emissions, kg.

K_1=1.830×10^{-6} kg/(m^3−ppm).

n=number of measurement points.

Q_{Gj}=average effluent volumetric flow rate corrected to standard conditions at captured emissions point j, m^3/min.

Θ_C=total duration of CE sampling run, min.

9.2 Calculations.

9.2.1 Total VOC Captured Emissions.

$$G = \sum_{j=1}^{n} \left(C_{Gj} - C_B\right) Q_{Gj} \theta_C K_1 \quad \text{Eq. 204C-1}$$

9.2.2 VOC Concentration of the Captured Emissions at Point j.

$$C_{Gj} = DF\left(C_j - C_{DO}\right) \frac{C_H}{C_{DH} - C_{DO}} \quad \text{Eq. 204C-2}$$

9.2.3 Dilution Factor.

$$DF = \frac{C_A}{C_M} \quad \text{Eq. 204C-3}$$

9.2.4 Background VOC Concentration at Point i.

$$C_{Bi} = \left(C_i - C_{DO}\right) \frac{C_H}{C_{DH} - C_{DO}} \quad \text{Eq. 204C-4}$$

9.2.5 Average Background Concentration.

$$C_B = \frac{\sum_{i=1}^{n} C_{Bi} A_i}{A_N} \quad \text{Eq. 204C-5}$$

NOTE: If the concentration at each point is within 20 percent of the average concentration of all points, then use the arithmetic average.

10. Method Performance

The measurement uncertainties are estimated for each captured or uncaptured emissions point as follows: Q_{Gj}=±5.5 percent and C_{Gj}= ±5 percent. Based on these numbers, the probable uncertainty for G is estimated at about ±7.4 percent.

11. Diagrams

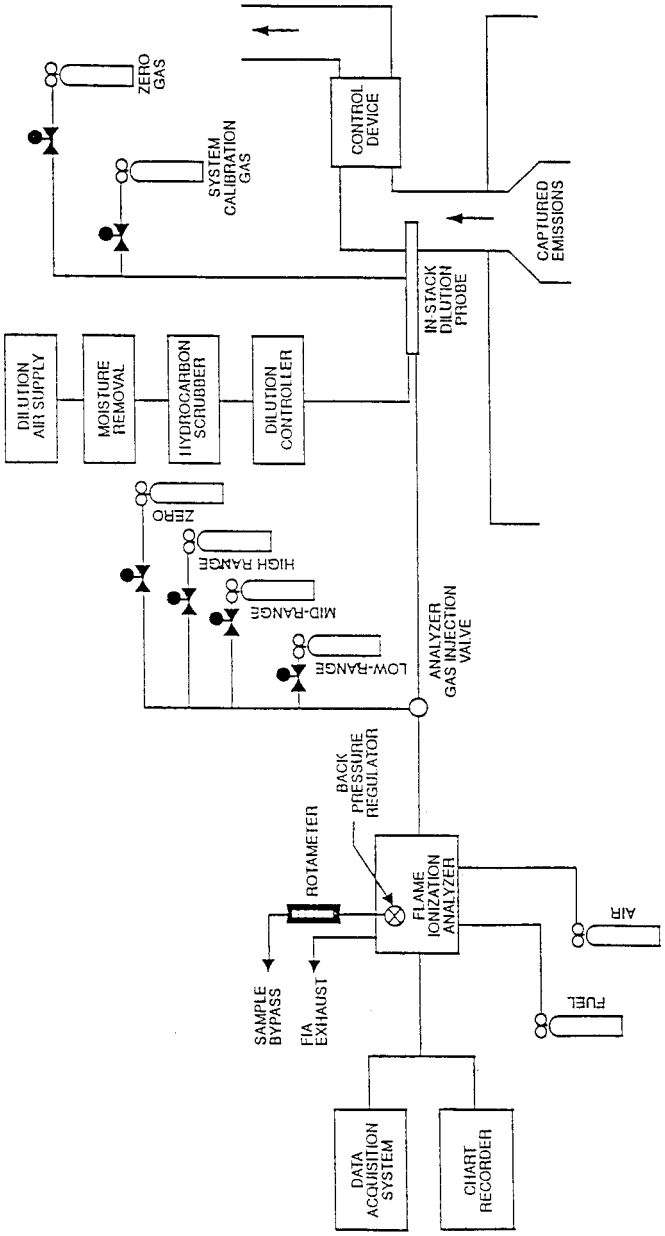

Figure 204C-1. Captured emissions measurement system.

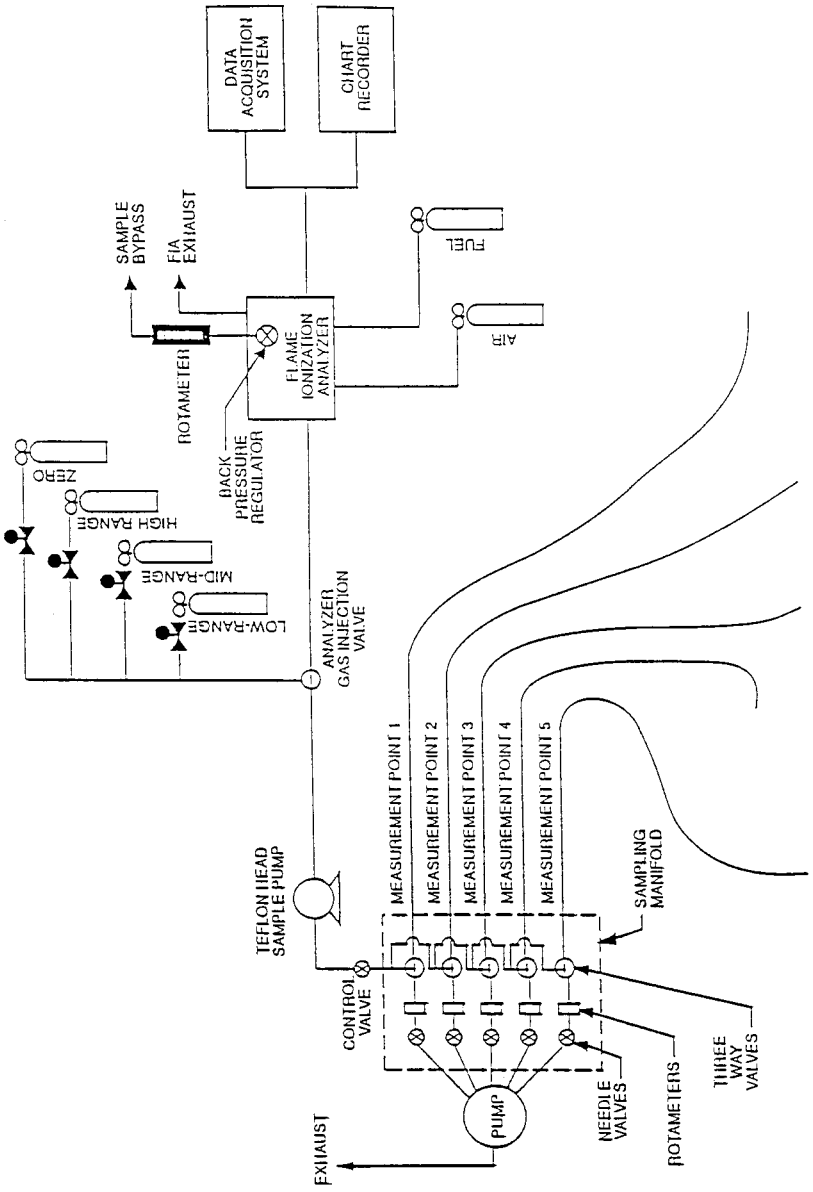

Figure 204C-2. Background measurement system.

METHOD 204D—VOLATILE ORGANIC COMPOUNDS EMISSIONS IN UNCAPTURED STREAM FROM TEMPORARY TOTAL ENCLOSURE

1. Scope and Application

1.1 Applicability. This procedure is applicable for determining the uncaptured volatile organic compounds (VOC) emissions from a temporary total enclosure (TTE). It is intended to be used as a segment in the development of liquid/gas or gas/gas protocols for determining VOC capture efficiency (CE) for surface coating and printing operations.

1.2 Principle. The amount of uncaptured VOC emissions (F) from the TTE is calculated as the sum of the products of the VOC content (C_{Fj}), the flow rate (Q_{Fj}) from each uncaptured emissions point, and the sampling time (Θ_F).

1.3 Sampling Requirements. A CE test shall consist of at least three sampling runs. Each run shall cover at least one complete production cycle, but shall be at least 3 hours long. The sampling time for each run need not exceed 8 hours, even if the production cycle has not been completed. Alternative sampling times may be used with the approval of the Administrator.

2. Summary of Method

A gas sample is extracted from the uncaptured exhaust duct of a TTE through a heated sample line and, if necessary, a glass fiber filter to a flame ionization analyzer (FIA).

3. Safety

Because this procedure is often applied in highly explosive areas, caution and care should be exercised in choosing, installing, and using the appropriate equipment.

4. Equipment and Supplies

Mention of trade names or company products does not constitute endorsement. All gas concentrations (percent, ppm) are by volume, unless otherwise noted.

4.1 Gas VOC Concentration. A schematic of the measurement system is shown in Figure 204D–1. The main components are as follows:

4.1.1 Sample Probe. Stainless steel or equivalent. The probe shall be heated to prevent VOC condensation.

4.1.2 Calibration Valve Assembly. Three-way valve assembly at the outlet of the sample probe to direct the zero and calibration gases to the analyzer. Other methods, such as quick-connect lines, to route calibration gases to the outlet of the sample probe are acceptable.

4.1.3 Sample Line. Stainless steel or Teflon tubing to transport the sample gas to the analyzer. The sample line must be heated to prevent condensation.

4.1.4 Sample Pump. A leak-free pump, to pull the sample gas through the system at a flow rate sufficient to minimize the response time of the measurement system. The components of the pump that contact the gas stream shall be constructed of stainless steel or Teflon. The sample pump must be heated to prevent condensation.

4.1.5 Sample Flow Rate Control. A sample flow rate control valve and rotameter, or equivalent, to maintain a constant sampling rate within 10 percent. The flow control valve and rotameter must be heated to prevent condensation. A control valve may also be located on the sample pump bypass loop to assist in controlling the sample pressure and flow rate.

4.1.6 Sample Gas Manifold. Capable of diverting a portion of the sample gas stream to the FIA, and the remainder to the bypass discharge vent. The manifold components shall be constructed of stainless steel or Teflon. If emissions are to be measured at multiple locations, the measurement system shall be designed to use separate sampling probes, lines, and pumps for each measurement location and a common sample gas manifold and FIA. The sample gas manifold and connecting lines to the FIA must be heated to prevent condensation.

4.1.7 Organic Concentration Analyzer. An FIA with a span value of 1.5 times the expected concentration as propane; however, other span values may be used if it can be demonstrated to the Administrator's satisfaction that they would provide more accurate measurements. The system shall be capable of meeting or exceeding the following specifications:

4.1.7.1 Zero Drift. Less than ±3.0 percent of the span value.

4.1.7.2 Calibration Drift. Less than ±3.0 percent of the span value.

4.1.7.3 Calibration Error. Less than ±5.0 percent of the calibration gas value.

4.1.7.4 Response Time. Less than 30 seconds.

4.1.8 Integrator/Data Acquisition System. An analog or digital device or computerized data acquisition system used to integrate the FIA response or compute the average response and record measurement data. The minimum data sampling frequency for computing average or integrated values is one measurement value every 5 seconds. The device shall be capable of recording average values at least once per minute.

4.2 Uncaptured Emissions Volumetric Flow Rate.

4.2.1 Method 2 or 2A Apparatus. For determining volumetric flow rate.

4.2.2 Method 3 Apparatus and Reagents. For determining molecular weight of the gas stream. An estimate of the molecular weight of the gas stream may be used if approved by the Administrator.

4.2.3 Method 4 Apparatus and Reagents. For determining moisture content, if necessary.

4.3 Temporary Total Enclosure. The criteria for designing an acceptable TTE are specified in Method 204.

5. Reagents and Standards

5.1 Calibration and Other Gases. Gases used for calibration, fuel, and combustion air (if required) are contained in compressed gas cylinders. All calibration gases shall be traceable to National Institute of Standards and Technology standards and shall be certified by the manufacturer to ±1 percent of

the tag value. Additionally, the manufacturer of the cylinder should provide a recommended shelf life for each calibration gas cylinder over which the concentration does not change more than ±2 percent from the certified value. For calibration gas values not generally available, dilution systems calibrated using Method 205 may be used. Alternative methods for preparing calibration gas mixtures may be used with the approval of the Administrator.

5.1.1 Fuel. The FIA manufacturer's recommended fuel should be used. A 40 percent H_2/60 percent He or 40 percent H_2/60 percent N_2 gas mixture is recommended to avoid an oxygen synergism effect that reportedly occurs when oxygen concentration varies significantly from a mean value. Other mixtures may be used provided the tester can demonstrate to the Administrator that there is no oxygen synergism effect.

5.1.2 Carrier Gas. High purity air with less than 1 ppm of organic material (as propane or carbon equivalent) or less than 0.1 percent of the span value, whichever is greater.

5.1.3 FIA Linearity Calibration Gases. Low-, mid-, and high-range gas mixture standards with nominal propane concentrations of 20–30, 45–55, and 70–80 percent of the span value in air, respectively. Other calibration values and other span values may be used if it can be shown to the Administrator's satisfaction that equally accurate measurements would be achieved.

5.2 Particulate Filter. An in-stack or an out-of-stack glass fiber filter is recommended if exhaust gas particulate loading is significant. An out-of-stack filter must be heated to prevent any condensation unless it can be demonstrated that no condensation occurs.

6. Quality Control

6.1 Required instrument quality control parameters are found in the following sections:

6.1.1 The FIA system must be calibrated as specified in section 7.1.

6.1.2 The system drift check must be performed as specified in section 7.2.

6.1.3 The system check must be conducted as specified in section 7.3.

6.2 Audits.

6.2.1 Analysis Audit Procedure. Immediately before each test, analyze an audit cylinder as described in section 7.2. The analysis audit must agree with the audit cylinder concentration within 10 percent.

6.2.2 Audit Samples and Audit Sample Availability. Audit samples will be supplied only to enforcement agencies for compliance tests. The availability of audit samples may be obtained by writing: Source Test Audit Coordinator (STAC) (MD–77B) Quality Assurance Division, Atmospheric Research and Exposure Assessment Laboratory, U.S. Environmental Protection Agency, Research Triangle Park, NC 27711 or by calling the STAC at (919) 541–7834. The request for the audit sample must be made at least 30 days prior to the scheduled compliance sample analysis.

6.2.3 Audit Results. Calculate the audit sample concentration according to the calculation procedure described in the audit instructions included with the audit sample. Fill in the audit sample concentration and the analyst's name on the audit response form included with the audit instructions. Send one copy to the EPA Regional Office or the appropriate enforcement agency, and a second copy to the STAC. The EPA Regional Office or the appropriate enforcement agency will report the results of the audit to the laboratory being audited. Include this response with the results of the compliance samples in relevant reports to the EPA Regional Office or the appropriate enforcement agency.

7. Calibration and Standardization

7.1 FIA Calibration and Linearity Check. Make necessary adjustments to the air and fuel supplies for the FIA and ignite the burner. Allow the FIA to warm up for the period recommended by the manufacturer. Inject a calibration gas into the measurement system and adjust the back-pressure regulator to the value required to achieve the flow rates specified by the manufacturer. Inject the zero-and the high-range calibration gases and adjust the analyzer calibration to provide the proper responses. Inject the low-and mid-range gases and record the responses of the measurement system. The calibration and linearity of the system are acceptable if the responses for all four gases are within 5 percent of the respective gas values. If the performance of the system is not acceptable, repair or adjust the system and repeat the linearity check. Conduct a calibration and linearity check after assembling the analysis system and after a major change is made to the system.

7.2 Systems Drift Checks. Select the calibration gas concentration that most closely approximates that of the uncaptured gas emissions concentration to conduct the drift checks. Introduce the zero and calibration gases at the calibration valve assembly and verify that the appropriate gas flow rate and pressure are present at the FIA. Record the measurement system responses to the zero and calibration gases. The performance of the system is acceptable if the difference between the drift check measurement and the value obtained in section 7.1 is less than 3 percent of the span value. Alternatively, recalibrate the FIA as in section 7.1 and report the results using both sets of calibration data (i.e., data determined prior to the test period and data determined following the test period). The data that results in the

lowest CE value shall be reported as the results for the test run. Conduct a system drift check at the end of each run.

7.3 System Check. Inject the high-range calibration gas at the inlet of the sampling probe and record the response. The performance of the system is acceptable if the measurement system response is within 5 percent of the value obtained in section 7.1 for the high-range calibration gas. Conduct a system check before each test run.

8. Procedure

8.1 Determination of Volumetric Flow Rate of Uncaptured Emissions

8.1.1 Locate all points where uncaptured emissions are exhausted from the TTE. Using Method 1, determine the sampling points. Be sure to check each site for cyclonic or swirling flow.

8.1.2 Measure the velocity at each sampling site at least once every hour during each sampling run using Method 2 or 2A.

8.2 Determination of VOC Content of Uncaptured Emissions.

8.2.1 Analysis Duration. Measure the VOC responses at each uncaptured emission point during the entire test run or, if applicable, while the process is operating. If there are multiple emission locations, design a sampling system to allow a single FIA to be used to determine the VOC responses at all sampling locations.

8.2.2 Gas VOC Concentration.

8.2.2.1 Assemble the sample train as shown in Figure 204D–1. Calibrate the FIA and conduct a system check according to the procedures in sections 7.1 and 7.3, respectively.

8.2.2.2 Install the sample probe so that the probe is centrally located in the stack, pipe, or duct, and is sealed tightly at the stack port connection.

8.2.2.3 Inject zero gas at the calibration valve assembly. Allow the measurement system response to reach zero. Measure the system response time as the time required for the system to reach the effluent concentration after the calibration valve has been returned to the effluent sampling position.

8.2.2.4 Conduct a system check before, and a system drift check after, each sampling run according to the procedures in sections 7.2 and 7.3. If the drift check following a run indicates unacceptable performance (see section 7.3), the run is not valid. Alternatively, recalibrate the FIA as in section 7.1 and report the results using both sets of calibration data (i.e., data determined prior to the test period and data determined following the test period). The data that results in the lowest CE value shall be reported as the results for the test run. The tester may elect to perform system drift checks during the run not to exceed one drift check per hour.

8.2.2.5 Verify that the sample lines, filter, and pump temperatures are 120±5 °C.

8.2.2.6 Begin sampling at the start of the test period and continue to sample during the entire run. Record the starting and ending times and any required process information, as appropriate. If multiple emission locations are sampled using a single FIA, sample at each location for the same amount of time (e.g., 2 min.) and continue to switch from one location to another for the entire test run. Be sure that total sampling time at each location is the same at the end of the test run. Collect at least four separate measurements from each sample point during each hour of testing. Disregard the response measurements at each sampling location until 2 times the response time of the measurement system has elapsed. Continue sampling for at least 1 minute and record the concentration measurements.

8.2.3 Background Concentration.

8.2.3.1 Locate all natural draft openings (NDO's) of the TTE. A sampling point shall be at the center of each NDO, unless otherwise approved by the Administrator. If there are more than six NDO's, choose six sampling points evenly spaced among the NDO's.

8.2.3.2 Assemble the sample train as shown in Figure 204D–2. Calibrate the FIA and conduct a system check according to the procedures in sections 7.1 and 7.3.

8.2.3.3 Position the probe at the sampling location.

8.2.3.4 Determine the response time, conduct the system check, and sample according to the procedures described in sections 8.2.2.3 through 8.2.2.6.

8.2.4 Alternative Procedure. The direct interface sampling and analysis procedure described in section 7.2 of Method 18 may be used to determine the gas VOC concentration. The system must be designed to collect and analyze at least one sample every 10 minutes. If the alternative procedure is used to determine the VOC concentration of the uncaptured emissions in a gas/gas protocol, it must also be used to determine the VOC concentration of the captured emissions. If a tester wishes to conduct a liquid/gas protocol using a gas chromatograph, the tester must use Method 204F for the liquid steam. A gas chromatograph is not an acceptable alternative to the FIA in Method 204A.

9. Data Analysis and Calculations

9.1 Nomenclature.

A_i=area of NDO i, ft^2.

A_N=total area of all NDO's in the enclosure, ft^2.

C_{Bi}=corrected average VOC concentration of background emissions at point i, ppm propane.

C_B=average background concentration, ppm propane.

C_{DH}=average measured concentration for the drift check calibration gas, ppm propane.

C_{DO}=average system drift check concentration for zero concentration gas, ppm propane.

C_{Fj}=corrected average VOC concentration of uncaptured emissions at point j, ppm propane.

C_H=actual concentration of the drift check calibration gas, ppm propane.

C_i=uncorrected average background VOC concentration at point i, ppm propane.

C_j=uncorrected average VOC concentration measured at point j, ppm propane.

F=total VOC content of uncaptured emissions, kg.

K_1=1.830 x 10^{-6} kg/(m^3-ppm).

n=number of measurement points.

Q_{Fj}=average effluent volumetric flow rate corrected to standard conditions at uncaptured emissions point j, m^3/min.

Θ_F=total duration of uncaptured emissions sampling run, min.

9.2 Calculations.

9.2.1 Total Uncaptured VOC Emissions.

$$F = \sum_{j=1}^{n} \left(C_{Fj} - C_B\right) Q_{Fj} \theta_F K_1 \qquad \text{Eq. 204D-1}$$

9.2.2 VOC Concentration of the Uncaptured Emissions at Point j.

$$C_{Fj} = \left(C_j - C_{DO}\right) \frac{C_H}{C_{DH} - C_{DO}} \qquad \text{Eq. 204D-2}$$

9.2.3 Background VOC Concentration at Point i.

$$C_{Bi} = \left(C_i - C_{DO}\right) \frac{C_H}{C_{DH} - C_{DO}} \qquad \text{Eq. 204D-3}$$

9.2.4 Average Background Concentration.

$$C_B = \frac{\sum_{i=1}^{n} C_{Bi} A_i}{A_N} \qquad \text{Eq. 204D-4}$$

NOTE: If the concentration at each point is within 20 percent of the average concentration of all points, use the arithmetic average.

10. Method Performance

The measurement uncertainties are estimated for each uncaptured emission point as follows: Q_{Fj}=±5.5 percent and C_{Fj}=±5.0 percent. Based on these numbers, the probable uncertainty for F is estimated at about ±7.4 percent.

11. Diagrams

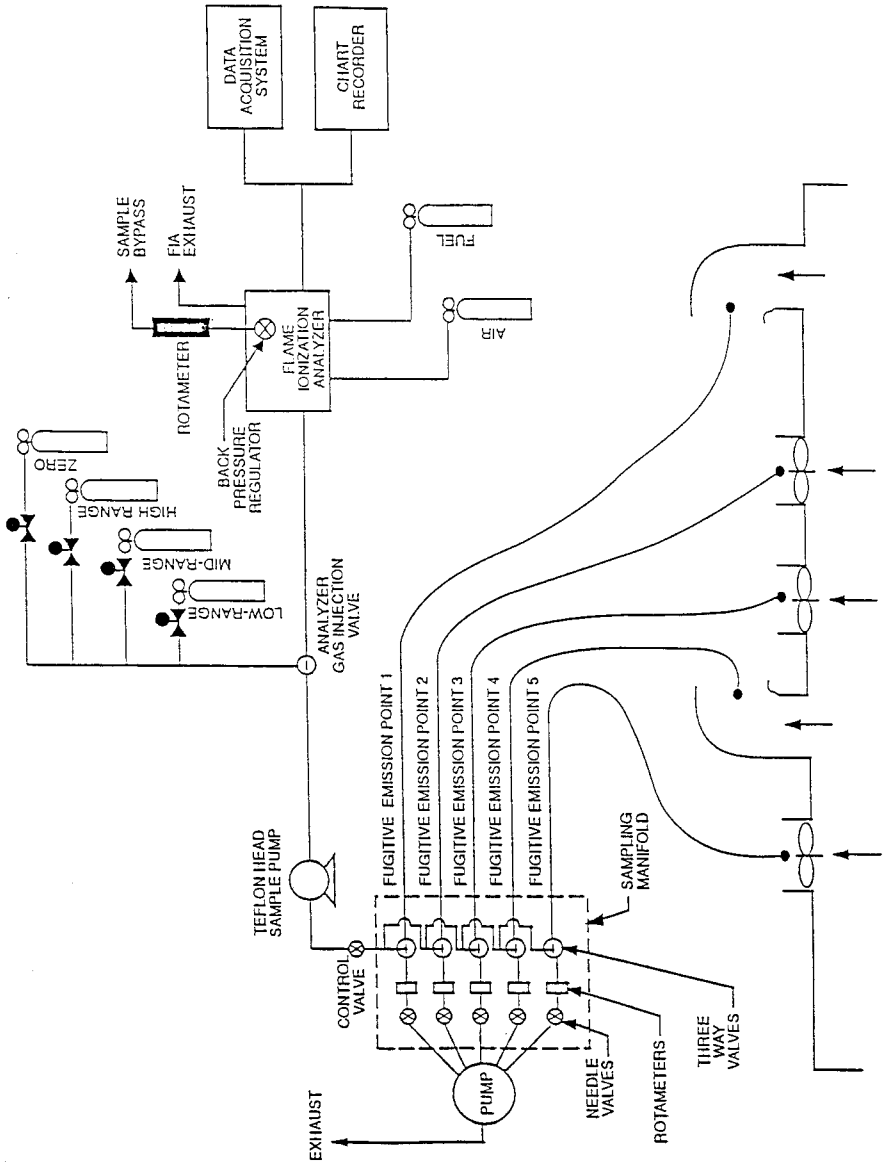

Figure 204D-1. Fugitive emissions measurement system.

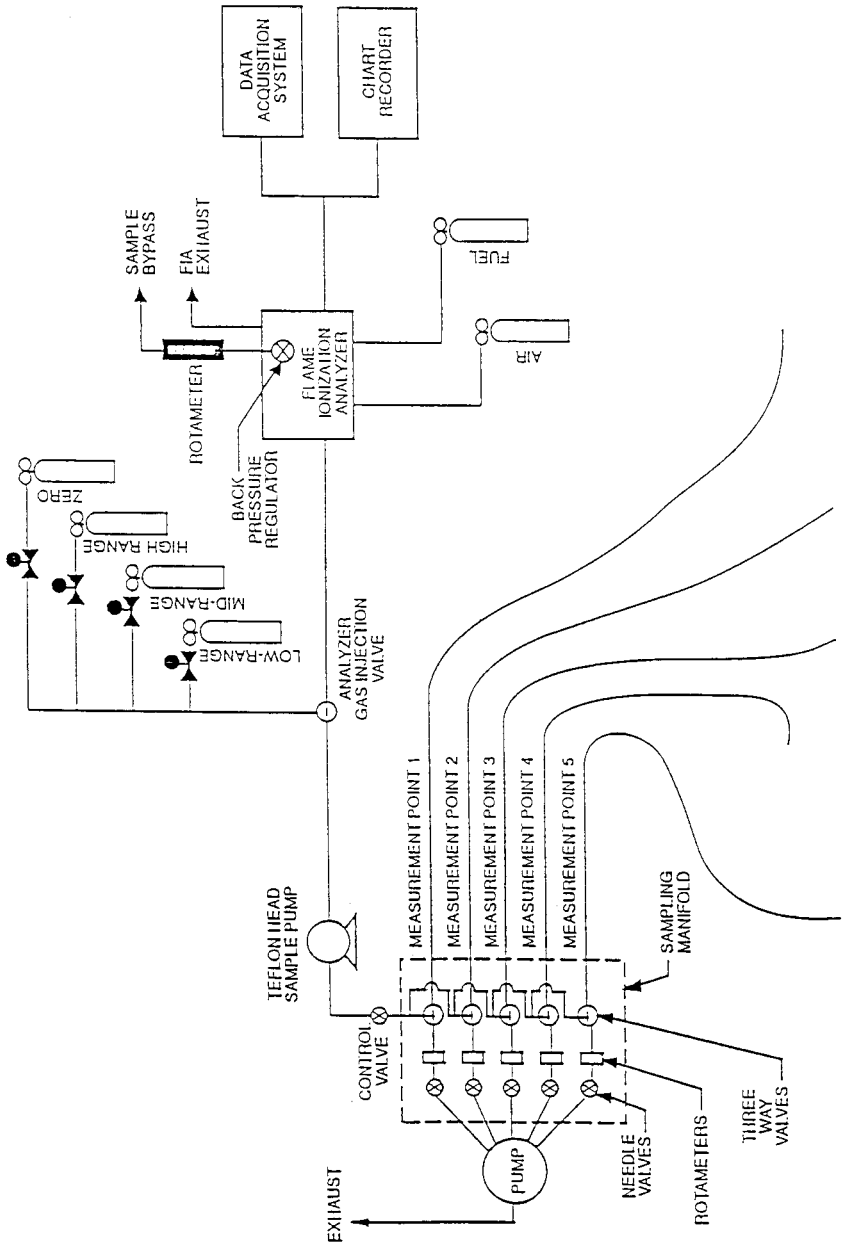

Figure 204D-2. Background measurement system.

METHOD 204E—VOLATILE ORGANIC COMPOUNDS EMISSIONS IN UNCAPTURED STREAM FROM BUILDING ENCLOSURE

1. Scope and Application

1.1 Applicability. This procedure is applicable for determining the uncaptured volatile organic compounds (VOC) emissions from a building enclosure (BE). It is intended to be used in the development of liquid/gas or gas/gas protocols for determining VOC capture efficiency (CE) for surface coating and printing operations.

1.2 Principle. The total amount of uncaptured VOC emissions (F_B) from the BE is calculated as the sum of the products of the VOC content (C_{Fj}) of each uncaptured emissions point, the flow rate (Q_{Fj}) at each uncaptured emissions point, and time (Θ_F).

1.3 Sampling Requirements. A CE test shall consist of at least three sampling runs. Each run shall cover at least one complete production cycle, but shall be at least 3 hours long. The sampling time for each run need not exceed 8 hours, even if the production cycle has not been completed. Alternative sampling times may be used with the approval of the Administrator.

2. Summary of Method

A gas sample is extracted from the uncaptured exhaust duct of a BE through a heated sample line and, if necessary, a glass fiber filter to a flame ionization analyzer (FIA).

3. Safety

Because this procedure is often applied in highly explosive areas, caution and care should be exercised in choosing, installing, and using the appropriate equipment.

4. Equipment and Supplies

Mention of trade names or company products does not constitute endorsement. All gas concentrations (percent, ppm) are by volume, unless otherwise noted.

4.1 Gas VOC Concentration. A schematic of the measurement system is shown in Figure 204E–1. The main components are as follows:

4.1.1 Sample Probe. Stainless steel or equivalent. The probe shall be heated to prevent VOC condensation.

4.1.2 Calibration Valve Assembly. Three-way valve assembly at the outlet of the sample probe to direct the zero and calibration gases to the analyzer. Other methods, such as quick-connect lines, to route calibration gases to the outlet of the sample probe are acceptable.

4.1.3 Sample Line. Stainless steel or Teflon tubing to transport the sample gas to the analyzer. The sample line must be heated to prevent condensation.

4.1.4 Sample Pump. A leak-free pump, to pull the sample gas through the system at a flow rate sufficient to minimize the response time of the measurement system. The components of the pump that contact the gas stream shall be constructed of stainless steel or Teflon. The sample pump must be heated to prevent condensation.

4.1.5 Sample Flow Rate Control. A sample flow rate control valve and rotameter, or equivalent, to maintain a constant sampling rate within 10 percent. The flow rate control valve and rotameter must be heated to prevent condensation. A control valve may also be located on the sample pump bypass loop to assist in controlling the sample pressure and flow rate.

4.1.6 Sample Gas Manifold. Capable of diverting a portion of the sample gas stream to the FIA, and the remainder to the bypass discharge vent. The manifold components shall be constructed of stainless steel or Teflon. If emissions are to be measured at multiple locations, the measurement system shall be designed to use separate sampling probes, lines, and pumps for each measurement location, and a common sample gas manifold and FIA. The sample gas manifold must be heated to prevent condensation.

4.1.7 Organic Concentration Analyzer. An FIA with a span value of 1.5 times the expected concentration as propane; however, other span values may be used if it can be demonstrated to the Administrator's satisfaction that they would provide equally accurate measurements. The system shall be capable of meeting or exceeding the following specifications:

4.1.7.1 Zero Drift. Less than ±3.0 percent of the span value.

4.1.7.2 Calibration Drift. Less than ±3.0 percent of the span value.

4.1.7.3 Calibration Error. Less than ±5.0 percent of the calibration gas value.

4.1.7.4 Response Time. Less than 30 seconds.

4.1.8 Integrator/Data Acquisition System. An analog or digital device or computerized data acquisition system used to integrate the FIA response or compute the average response and record measurement data. The minimum data sampling frequency for computing average or integrated values is one measurement value every 5 seconds. The device shall be capable of recording average values at least once per minute.

4.2 Uncaptured Emissions Volumetric Flow Rate.

4.2.1 Flow Direction Indicators. Any means of indicating inward or outward flow, such as light plastic film or paper streamers, smoke tubes, filaments, and sensory perception.

4.2.2 Method 2 or 2A Apparatus. For determining volumetric flow rate. Anemometers or similar devices calibrated according to the manufacturer's instructions may be used

when low velocities are present. Vane anemometers (Young-maximum response propeller), specialized pitots with electronic manometers (e.g., Shortridge Instruments Inc., Airdata Multimeter 860) are commercially available with measurement thresholds of 15 and 8 mpm (50 and 25 fpm), respectively.

4.2.3 Method 3 Apparatus and Reagents. For determining molecular weight of the gas stream. An estimate of the molecular weight of the gas stream may be used if approved by the Administrator.

4.2.4 Method 4 Apparatus and Reagents. For determining moisture content, if necessary.

4.3 Building Enclosure. The criteria for an acceptable BE are specified in Method 204.

5. Reagents and Standards

5.1 Calibration and Other Gases. Gases used for calibration, fuel, and combustion air (if required) are contained in compressed gas cylinders. All calibration gases shall be traceable to National Institute of Standards and Technology standards and shall be certified by the manufacturer to ±1 percent of the tag value. Additionally, the manufacturer of the cylinder should provide a recommended shelf life for each calibration gas cylinder over which the concentration does not change more than ±2 percent from the certified value. For calibration gas values not generally available, dilution systems calibrated using Method 205 may be used. Alternative methods for preparing calibration gas mixtures may be used with the approval of the Administrator.

5.1.1 Fuel. The FIA manufacturer's recommended fuel should be used. A 40 percent H_2/60 percent He or 40 percent H_2/60 percent N_2 gas mixture is recommended to avoid an oxygen synergism effect that reportedly occurs when oxygen concentration varies significantly from a mean value. Other mixtures may be used provided the tester can demonstrate to the Administrator that there is no oxygen synergism effect.

5.1.2 Carrier Gas. High purity air with less than 1 ppm of organic material (propane or carbon equivalent) or less than 0.1 percent of the span value, whichever is greater.

5.1.3 FIA Linearity Calibration Gases. Low-, mid-, and high-range gas mixture standards with nominal propane concentrations of 20–30, 45–55, and 70–80 percent of the span value in air, respectively. Other calibration values and other span values may be used if it can be shown to the Administrator's satisfaction that equally accurate measurements would be achieved.

5.2 Particulate Filter. An in-stack or an out-of-stack glass fiber filter is recommended if exhaust gas particulate loading is significant. An out-of-stack filter must be heated to prevent any condensation unless it can be demonstrated that no condensation occurs.

6. Quality Control

6.1 Required instrument quality control parameters are found in the following sections:

6.1.1 The FIA system must be calibrated as specified in section 7.1.

6.1.2 The system drift check must be performed as specified in section 7.2.

6.1.3 The system check must be conducted as specified in section 7.3.

6.2 Audits.

6.2.1 Analysis Audit Procedure. Immediately before each test, analyze an audit cylinder as described in section 7.2. The analysis audit must agree with the audit cylinder concentration within 10 percent.

6.2.2 Audit Samples and Audit Sample Availability. Audit samples will be supplied only to enforcement agencies for compliance tests. The availability of audit samples may be obtained by writing: Source Test Audit Coordinator (STAC) (MD–77B), Quality Assurance Division, Atmospheric Research and Exposure Assessment Laboratory, U.S. Environmental Protection Agency, Research Triangle Park, NC 27711 or by calling the STAC at (919) 541–7834. The request for the audit sample must be made at least 30 days prior to the scheduled compliance sample analysis.

6.2.3 Audit Results. Calculate the audit sample concentration according to the calculation procedure described in the audit instructions included with the audit sample. Fill in the audit sample concentration and the analyst's name on the audit response form included with the audit instructions. Send one copy to the EPA Regional Office or the appropriate enforcement agency, and a second copy to the STAC. The EPA Regional Office or the appropriate enforcement agency will report the results of the audit to the laboratory being audited. Include this response with the results of the compliance samples in relevant reports to the EPA Regional Office or the appropriate enforcement agency.

7. Calibration and Standardization

7.1 FIA Calibration and Linearity Check. Make necessary adjustments to the air and fuel supplies for the FIA and ignite the burner. Allow the FIA to warm up for the period recommended by the manufacturer. Inject a calibration gas into the measurement system and adjust the back-pressure regulator to the value required to achieve the flow rates specified by the manufacturer. Inject the zero-and the high-range calibration gases, and adjust the analyzer calibration to provide the proper responses. Inject the low- and mid-range gases and record the responses of the measurement system. The

calibration and linearity of the system are acceptable if the responses for all four gases are within 5 percent of the respective gas values. If the performance of the system is not acceptable, repair or adjust the system and repeat the linearity check. Conduct a calibration and linearity check after assembling the analysis system and after a major change is made to the system.

7.2 Systems Drift Checks. Select the calibration gas that most closely approximates the concentration of the captured emissions for conducting the drift checks. Introduce the zero and calibration gases at the calibration valve assembly and verify that the appropriate gas flow rate and pressure are present at the FIA. Record the measurement system responses to the zero and calibration gases. The performance of the system is acceptable if the difference between the drift check measurement and the value obtained in section 7.1 is less than 3 percent of the span value. Alternatively, recalibrate the FIA as in section 7.1 and report the results using both sets of calibration data (i.e., data determined prior to the test period and data determined following the test period). The data that results in the lowest CE value shall be reported as the results for the test run. Conduct a system drift check at the end of each run.

7.3 System Check. Inject the high-range calibration gas at the inlet of the sampling probe and record the response. The performance of the system is acceptable if the measurement system response is within 5 percent of the value obtained in section 7.1 for the high-range calibration gas. Conduct a system check before each test run.

8. Procedure

8.1 Preliminary Determinations. The following points are considered exhaust points and should be measured for volumetric flow rates and VOC concentrations:

8.1.1 Forced Draft Openings. Any opening in the facility with an exhaust fan. Determine the volumetric flow rate according to Method 2.

8.1.2 Roof Openings. Any openings in the roof of a facility which does not contain fans are considered to be exhaust points. Determine volumetric flow rate from these openings. Use the appropriate velocity measurement devices (e.g., propeller anemometers).

8.2 Determination of Flow Rates.

8.2.1 Measure the volumetric flow rate at all locations identified as exhaust points in section 8.1. Divide each exhaust opening into nine equal areas for rectangular openings and into eight equal areas for circular openings.

8.2.2 Measure the velocity at each site at least once every hour during each sampling run using Method 2 or 2A, if applicable, or using the low velocity instruments in section 4.2.2.

8.3 Determination of VOC Content of Uncaptured Emissions.

8.3.1 Analysis Duration. Measure the VOC responses at each uncaptured emissions point during the entire test run or, if applicable, while the process is operating. If there are multiple emissions locations, design a sampling system to allow a single FIA to be used to determine the VOC responses at all sampling locations.

8.3.2 Gas VOC Concentration.

8.3.2.1 Assemble the sample train as shown in Figure 204E–1. Calibrate the FIA and conduct a system check according to the procedures in sections 7.1 and 7.3, respectively.

8.3.2.2 Install the sample probe so that the probe is centrally located in the stack, pipe, or duct, and is sealed tightly at the stack port connection.

8.3.2.3 Inject zero gas at the calibration valve assembly. Allow the measurement system response to reach zero. Measure the system response time as the time required for the system to reach the effluent concentration after the calibration valve has been returned to the effluent sampling position.

8.3.2.4 Conduct a system check before, and a system drift check after, each sampling run according to the procedures in sections 7.2 and 7.3. If the drift check following a run indicates unacceptable performance (see section 7.3), the run is not valid. Alternatively, recalibrate the FIA as in section 7.1 and report the results using both sets of calibration data (i.e., data determined prior to the test period and data determined following the test period). The data that results in the lowest CE value shall be reported as the results for the test run. The tester may elect to perform drift checks during the run, not to exceed one drift check per hour.

8.3.2.5 Verify that the sample lines, filter, and pump temperatures are 120 ±5 °C.

8.3.2.6 Begin sampling at the start of the test period and continue to sample during the entire run. Record the starting and ending times, and any required process information, as appropriate. If multiple emission locations are sampled using a single FIA, sample at each location for the same amount of time (e.g., 2 minutes) and continue to switch from one location to another for the entire test run. Be sure that total sampling time at each location is the same at the end of the test run. Collect at least four separate measurements from each sample point during each hour of testing. Disregard the response measurements at each sampling location until 2 times the response time of the measurement system has elapsed. Continue sampling for at least 1 minute, and record the concentration measurements.

8.4 Alternative Procedure. The direct interface sampling and analysis procedure described in section 7.2 of Method 18 may be

used to determine the gas VOC concentration. The system must be designed to collect and analyze at least one sample every 10 minutes. If the alternative procedure is used to determine the VOC concentration of the uncaptured emissions in a gas/gas protocol, it must also be used to determine the VOC concentration of the captured emissions. If a tester wishes to conduct a liquid/gas protocol using a gas chromatograph, the tester must use Method 204F for the liquid steam. A gas chromatograph is not an acceptable alternative to the FIA in Method 204A.

9. Data Analysis and Calculations

9.1 Nomenclature.

C_{DH}=average measured concentration for the drift check calibration gas, ppm propane.

C_{D0}=average system drift check concentration for zero concentration gas, ppm propane.

C_{Fj}=corrected average VOC concentration of uncaptured emissions at point j, ppm propane.

C_H=actual concentration of the drift check calibration gas, ppm propane.

C_j=uncorrected average VOC concentration measured at point j, ppm propane.

F_B=total VOC content of uncaptured emissions from the building, kg.

K_1=1.830×10^{-6} kg/(m^3–ppm).

n=number of measurement points.

Q_{Fj}=average effluent volumetric flow rate corrected to standard conditions at uncaptured emissions point j, m^3/min.

Θ_F=total duration of CE sampling run, min.

9.2 Calculations

9.2.1 Total VOC Uncaptured Emissions from the Building.

$$F_B = \sum_{j=1}^{n} C_{Fj} Q_{Fj} \theta_F K_1 \qquad \text{Eq. 204E-1}$$

9.2.2 VOC Concentration of the Uncaptured Emissions at Point j.

$$C_{Fj} = \left(C_j - C_{DO}\right) \frac{C_H}{C_{DH} - C_{DO}} \qquad \text{Eq. 204E-2}$$

10. Method Performance

The measurement uncertainties are estimated for each uncaptured emissions point as follows: Q_{Fj}=±10.0 percent and C_{Fj}=± 5.0 percent. Based on these numbers, the probable uncertainty for F_B is estimated at about ±11.2 percent.

11. Diagrams

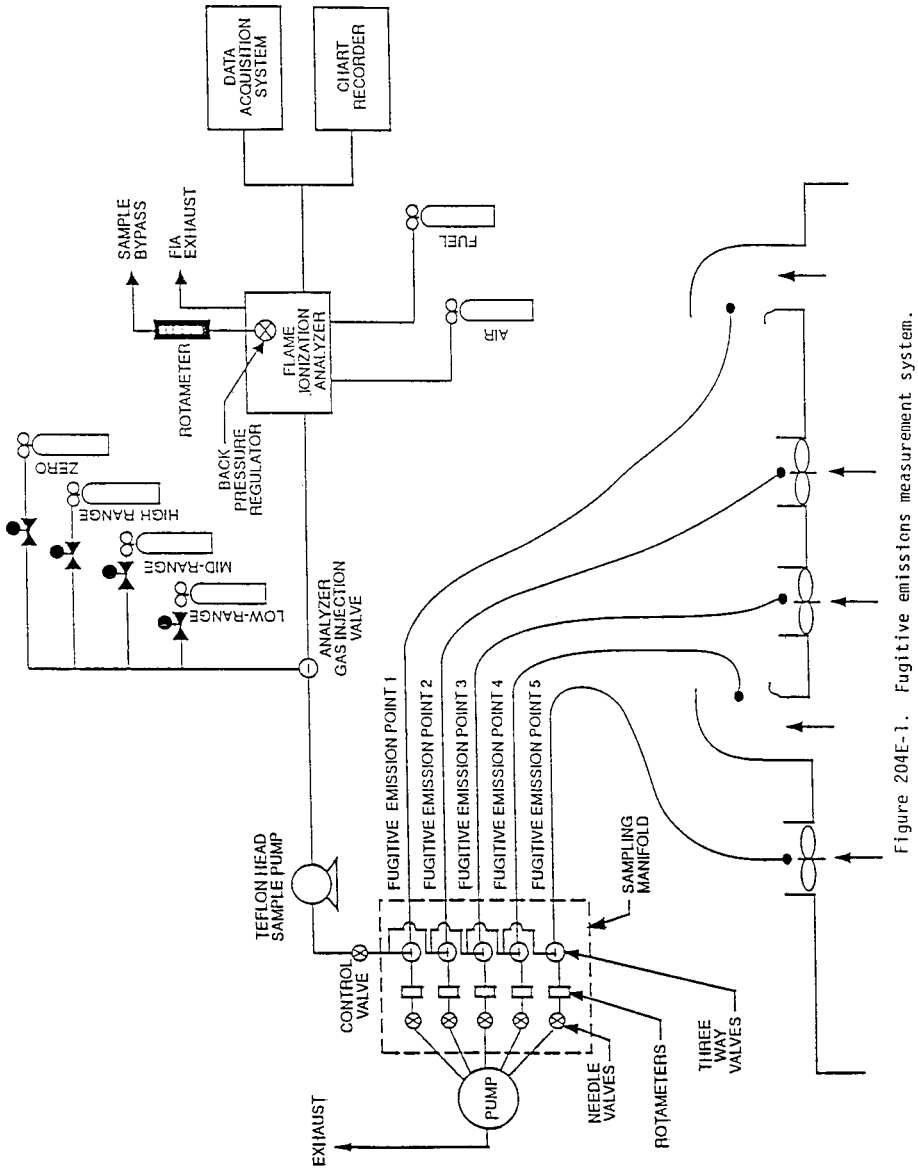

Figure 204E-1. Fugitive emissions measurement system.

METHOD 204F—VOLATILE ORGANIC COMPOUNDS CONTENT IN LIQUID INPUT STREAM (DISTILLATION APPROACH)

1. Introduction

1.1 Applicability. This procedure is applicable for determining the input of volatile organic compounds (VOC). It is intended to be used as a segment in the development of liquid/gas protocols for determining VOC capture efficiency (CE) for surface coating and printing operations.

1.2 Principle. The amount of VOC introduced to the process (L) is the sum of the products of the weight (W) of each VOC containing liquid (ink, paint, solvent, etc.) used,

and its VOC content (V), corrected for a response factor (RF).

1.3 Sampling Requirements. A CE test shall consist of at least three sampling runs. Each run shall cover at least one complete production cycle, but shall be at least 3 hours long. The sampling time for each run need not exceed 8 hours, even if the production cycle has not been completed. Alternative sampling times may be used with the approval of the Administrator.

2. Summary of Method

A sample of each coating used is distilled to separate the VOC fraction. The distillate is used to prepare a known standard for analysis by an flame ionization analyzer (FIA), calibrated against propane, to determine its RF.

3. Safety

Because this procedure is often applied in highly explosive areas, caution and care should be exercised in choosing, installing, and using the appropriate equipment.

4. Equipment and Supplies

Mention of trade names or company products does not constitute endorsement. All gas concentrations (percent, ppm) are by volume, unless otherwise noted.

4.1 Liquid Weight.

4.1.1 Balances/Digital Scales. To weigh drums of VOC containing liquids to within 0.2 lb or 1.0 percent of the total weight of VOC liquid used.

4.1.2 Volume Measurement Apparatus (Alternative). Volume meters, flow meters, density measurement equipment, etc., as needed to achieve the same accuracy as direct weight measurements.

4.2 Response Factor Determination (FIA Technique). The VOC distillation system and Tedlar gas bag generation system apparatuses are shown in Figures 204F–1 and 204F–2, respectively. The following equipment is required:

4.2.1 Sample Collection Can. An appropriately-sized metal can to be used to collect VOC containing materials. The can must be constructed in such a way that it can be grounded to the coating container.

4.2.2 Needle Valves. To control gas flow.

4.2.3 Regulators. For calibration, dilution, and sweep gas cylinders.

4.2.4 Tubing and Fittings. Teflon and stainless steel tubing and fittings with diameters, lengths, and sizes determined by the connection requirements of the equipment.

4.2.5 Thermometer. Capable of measuring the temperature of the hot water and oil baths to within 1 °C.

4.2.6 Analytical Balance. To measure ±0.01 mg.

4.2.7 Microliter Syringe. 10–µl size.

4.2.8 Vacuum Gauge or Manometer. 0– to 760–mm (0– to 30–in.) Hg U-Tube manometer or vacuum gauge.

4.2.9 Hot Oil Bath, With Stirring Hot Plate. Capable of heating and maintaining a distillation vessel at 110 ± 3 °C.

4.2.10 Ice Water Bath. To cool the distillation flask.

4.2.11 Vacuum/Water Aspirator. A device capable of drawing a vacuum to within 20 mm Hg from absolute.

4.2.12 Rotary Evaporator System. Complete with folded inner coil, vertical style condenser, rotary speed control, and Teflon sweep gas delivery tube with valved inlet. Buchi Rotavapor or equivalent.

4.2.13 Ethylene Glycol Cooling/Circulating Bath. Capable of maintaining the condenser coil fluid at −10 °C.

4.2.14 Dry Gas Meter (DGM). Capable of measuring the dilution gas volume within 2 percent, calibrated with a spirometer or bubble meter, and equipped with a temperature gauge capable of measuring temperature within 3 °C.

4.2.15 Activated Charcoal/Mole Sieve Trap. To remove any trace level of organics picked up from the DGM.

4.2.16 Gas Coil Heater. Sufficient length of 0.125-inch stainless steel tubing to allow heating of the dilution gas to near the water bath temperature before entering the volatilization vessel.

4.2.17 Water Bath, With Stirring Hot Plate. Capable of heating and maintaining a volatilization vessel and coil heater at a temperature of 100 ± 5 °C.

4.2.18 Volatilization Vessel. 50–ml midget impinger fitted with a septum top and loosely filled with glass wool to increase the volatilization surface.

4.2.19 Tedlar Gas Bag. Capable of holding 30 liters of gas, flushed clean with zero air, leak tested, and evacuated.

4.2.20 Organic Concentration Analyzer. An FIA with a span value of 1.5 times the expected concentration as propane; however, other span values may be used if it can be demonstrated that they would provide equally accurate measurements. The FIA instrument should be the same instrument used in the gaseous analyses adjusted with the same fuel, combustion air, and sample back-pressure (flow rate) settings. The system shall be capable of meeting or exceeding the following specifications:

4.2.20.1 Zero Drift. Less than ±3.0 percent of the span value.

4.2.20.2 Calibration Drift. Less than ±3.0 percent of the span value.

4.2.20.3 Calibration Error. Less than ±3.0 percent of the calibration gas value.

4.2.21 Integrator/Data Acquisition System. An analog or digital device or computerized data acquisition system used to integrate the FIA response or compute the average response and record measurement data.

The minimum data sampling frequency for computing average or integrated value is one measurement value every 5 seconds. The device shall be capable of recording average values at least once per minute.

4.2.22 Chart Recorder (Optional). A chart recorder or similar device is recommended to provide a continuous analog display of the measurement results during the liquid sample analysis.

5. Reagents and Standards

5.1 Zero Air. High purity air with less than 1 ppm of organic material (as propane) or less than 0.1 percent of the span value, whichever is greater. Used to supply dilution air for making the Tedlar bag gas samples.

5.2 THC Free N_2. High purity N_2 with less than 1 ppm THC. Used as sweep gas in the rotary evaporator system.

5.3 Calibration and Other Gases. Gases used for calibration, fuel, and combustion air (if required) are contained in compressed gas cylinders. All calibration gases shall be traceable to National Institute of Standards and Technology standards and shall be certified by the manufacturer to ±1 percent of the tag value. Additionally, the manufacturer of the cylinder should provide a recommended shelf life for each calibration gas cylinder over which the concentration does not change more than ±2 percent from the certified value. For calibration gas values not generally available, dilution systems calibrated using Method 205 may be used. Alternative methods for preparing calibration gas mixtures may be used with the approval of the Administrator.

5.3.1 Fuel. The FIA manufacturer's recommended fuel should be used. A 40 percent H_2/60 percent He, or 40 percent H_2/60 percent N_2 mixture is recommended to avoid fuels with oxygen to avoid an oxygen synergism effect that reportedly occurs when oxygen concentration varies significantly from a mean value. Other mixtures may be used provided the tester can demonstrate to the Administrator that there is no oxygen synergism effect.

5.3.2 Combustion Air. High purity air with less than 1 ppm of organic material (as propane) or less than 0.1 percent of the span value, whichever is greater.

5.3.3 FIA Linearity Calibration Gases. Low-, mid-, and high-range gas mixture standards with nominal propane concentration of 20–30, 45–55, and 70–80 percent of the span value in air, respectively. Other calibration values and other span values may be used if it can be shown that equally accurate measurements would be achieved.

5.3.4 System Calibration Gas. Gas mixture standard containing propane in air, approximating the VOC concentration expected for the Tedlar gas bag samples.

6. Quality Control

6.1 Required instrument quality control parameters are found in the following sections:

6.1.1 The FIA system must be calibrated as specified in section 7.1.

6.1.2 The system drift check must be performed as specified in section 7.2.

6.2 Precision Control. A minimum of one sample in each batch must be distilled and analyzed in duplicate as a precision control. If the results of the two analyses differ by more than ±10 percent of the mean, then the system must be reevaluated and the entire batch must be redistilled and analyzed.

6.3 Audits.

6.3.1 Audit Procedure. Concurrently, analyze the audit sample and a set of compliance samples in the same manner to evaluate the technique of the analyst and the standards preparation. The same analyst, analytical reagents, and analytical system shall be used both for compliance samples and the EPA audit sample. If this condition is met, auditing of subsequent compliance analyses for the same enforcement agency within 30 days is not required. An audit sample set may not be used to validate different sets of compliance samples under the jurisdiction of different enforcement agencies, unless prior arrangements are made with both enforcement agencies.

6.3.2 Audit Samples. Audit Sample Availability. Audit samples will be supplied only to enforcement agencies for compliance tests. The availability of audit samples may be obtained by writing: Source Test Audit Coordinator (STAC) (MD–77B), Quality Assurance Division, Atmospheric Research and Exposure Assessment Laboratory, U.S. Environmental Protection Agency, Research Triangle Park, NC 27711 or by calling the STAC at (919) 541–7834. The request for the audit sample must be made at least 30 days prior to the scheduled compliance sample analysis.

6.3.3 Audit Results. Calculate the audit sample concentration according to the calculation procedure described in the audit instructions included with the audit sample. Fill in the audit sample concentration and the analyst's name on the audit response form included with the audit instructions. Send one copy to the EPA Regional Office or the appropriate enforcement agency, and a second copy to the STAC. The EPA Regional Office or the appropriate enforcement agency will report the results of the audit to the laboratory being audited. Include this response with the results of the compliance samples in relevant reports to the EPA Regional Office or the appropriate enforcement agency.

7. Calibration and Standardization

7.1 FIA Calibration and Linearity Check. Make necessary adjustments to the air and fuel supplies for the FIA and ignite the burner. Allow the FIA to warm up for the period recommended by the manufacturer. Inject a calibration gas into the measurement system and adjust the back-pressure regulator to the value required to achieve the flow rates specified by the manufacturer. Inject the zero-and the high-range calibration gases and adjust the analyzer calibration to provide the proper responses. Inject the low-and mid-range gases and record the responses of the measurement system. The calibration and linearity of the system are acceptable if the responses for all four gases are within 5 percent of the respective gas values. If the performance of the system is not acceptable, repair or adjust the system and repeat the linearity check. Conduct a calibration and linearity check after assembling the analysis system and after a major change is made to the system. A calibration curve consisting of zero gas and two calibration levels must be performed at the beginning and end of each batch of samples.

7.2 Systems Drift Checks. After each sample, repeat the system calibration checks in section 7.1 before any adjustments to the FIA or measurement system are made. If the zero or calibration drift exceeds ±3 percent of the span value, discard the result and repeat the analysis. Alternatively, recalibrate the FIA as in section 7.1 and report the results using both sets of calibration data (i.e., data determined prior to the test period and data determined following the test period). The data that results in the lowest CE value shall be reported as the results for the test run.

8. Procedures

8.1 Determination of Liquid Input Weight

8.1.1 Weight Difference. Determine the amount of material introduced to the process as the weight difference of the feed material before and after each sampling run. In determining the total VOC containing liquid usage, account for: (a) The initial (beginning) VOC containing liquid mixture; (b) any solvent added during the test run; (c) any coating added during the test run; and (d) any residual VOC containing liquid mixture remaining at the end of the sample run.

8.1.1.1 Identify all points where VOC containing liquids are introduced to the process. To obtain an accurate measurement of VOC containing liquids, start with an empty fountain (if applicable). After completing the run, drain the liquid in the fountain back into the liquid drum (if possible), and weigh the drum again. Weigh the VOC containing liquids to ±0.5 percent of the total weight (full) or ±1.0 percent of the total weight of VOC containing liquid used during the sample run, whichever is less. If the residual liquid cannot be returned to the drum, drain the fountain into a preweighed empty drum to determine the final weight of the liquid.

8.1.1.2 If it is not possible to measure a single representative mixture, then weigh the various components separately (e.g., if solvent is added during the sampling run, weigh the solvent before it is added to the mixture). If a fresh drum of VOC containing liquid is needed during the run, then weigh both the empty drum and fresh drum.

8.1.2 Volume Measurement (Alternative). If direct weight measurements are not feasible, the tester may use volume meters and flow rate meters (and density measurements) to determine the weight of liquids used if it can be demonstrated that the technique produces results equivalent to the direct weight measurements. If a single representative mixture cannot be measured, measure the components separately.

8.2 Determination of VOC Content in Input Liquids

8.2.1 Collection of Liquid Samples.

8.2.1.1 Collect a 1-pint or larger sample of the VOC containing liquid mixture at each application location at the beginning and end of each test run. A separate sample should be taken of each VOC containing liquid added to the application mixture during the test run. If a fresh drum is needed during the sampling run, then obtain a sample from the fresh drum.

8.2.1.2 When collecting the sample, ground the sample container to the coating drum. Fill the sample container as close to the rim as possible to minimize the amount of headspace.

8.2.1.3 After the sample is collected, seal the container so the sample cannot leak out or evaporate.

8.2.1.4 Label the container to identify clearly the contents.

8.2.2 Distillation of VOC.

8.2.2.1 Assemble the rotary evaporator as shown in Figure 204F–1.

8.2.2.2 Leak check the rotary evaporation system by aspirating a vacuum of approximately 20 mm Hg from absolute. Close up the system and monitor the vacuum for approximately 1 minute. If the vacuum falls more than 25 mm Hg in 1 minute, repair leaks and repeat. Turn off the aspirator and vent vacuum.

8.2.2.3 Deposit approximately 20 ml of sample (inks, paints, etc.) into the rotary evaporation distillation flask.

8.2.2.4 Install the distillation flask on the rotary evaporator.

8.2.2.5 Immerse the distillate collection flask into the ice water bath.

8.2.2.6 Start rotating the distillation flask at a speed of approximately 30 rpm.

8.2.2.7 Begin heating the vessel at a rate of 2 to 3 °C per minute.

8.2.2.8 After the hot oil bath has reached a temperature of 50 °C or pressure is evident on the mercury manometer, turn on the aspirator and gradually apply a vacuum to the evaporator to within 20 mm Hg of absolute. Care should be taken to prevent material burping from the distillation flask.

8.2.2.9 Continue heating until a temperature of 110 °C is achieved and maintain this temperature for at least 2 minutes, or until the sample has dried in the distillation flask.

8.2.2.10 Slowly introduce the N_2 sweep gas through the purge tube and into the distillation flask, taking care to maintain a vacuum of approximately 400-mm Hg from absolute.

8.2.2.11 Continue sweeping the remaining solvent VOC from the distillation flask and condenser assembly for 2 minutes, or until all traces of condensed solvent are gone from the vessel. Some distillate may remain in the still head. This will not affect solvent recovery ratios.

8.2.2.12 Release the vacuum, disassemble the apparatus and transfer the distillate to a labeled, sealed vial.

8.2.3 Preparation of VOC standard bag sample.

8.2.3.1 Assemble the bag sample generation system as shown in Figure 204F–2 and bring the water bath up to near boiling temperature.

8.2.3.2 Inflate the Tedlar bag and perform a leak check on the bag.

8.2.3.3 Evacuate the bag and close the bag inlet valve.

8.2.3.4 Record the current barometric pressure.

8.2.3.5 Record the starting reading on the dry gas meter, open the bag inlet valve, and start the dilution zero air flowing into the Tedlar bag at approximately 2 liters per minute.

8.2.3.6 The bag sample VOC concentration should be similar to the gaseous VOC concentration measured in the gas streams. The amount of liquid VOC required can be approximated using equations in section 9.2. Using Equation 204F–4, calculate C_{VOC} by assuming RF is 1.0 and selecting the desired gas concentration in terms of propane, C_{C3}. Assuming B_V is 20 liters, M_L, the approximate amount of liquid to be used to prepare the bag gas sample, can be calculated using Equation 204F–2.

8.2.3.7 Quickly withdraw an aliquot of the approximate amount calculated in section 8.2.3.6 from the distillate vial with the microliter syringe and record its weight from the analytical balance to the nearest 0.01 mg.

8.2.3.8 Inject the contents of the syringe through the septum of the volatilization vessel into the glass wool inside the vessel.

8.2.3.9 Reweigh and record the tare weight of the now empty syringe.

8.2.3.10 Record the pressure and temperature of the dilution gas as it is passed through the dry gas meter.

8.2.3.11 After approximately 20 liters of dilution gas have passed into the Tedlar bag, close the valve to the dilution air source and record the exact final reading on the dry gas meter.

8.2.3.12 The gas bag is then analyzed by FIA within 1 hour of bag preparation in accordance with the procedure in section 8.2.4.

8.2.4 Determination of VOC response factor.

8.2.4.1 Start up the FIA instrument using the same settings as used for the gaseous VOC measurements.

8.2.4.2 Perform the FIA analyzer calibration and linearity checks according to the procedure in section 7.1. Record the responses to each of the calibration gases and the back-pressure setting of the FIA.

8.2.4.3 Connect the Tedlar bag sample to the FIA sample inlet and record the bag concentration in terms of propane. Continue the analyses until a steady reading is obtained for at least 30 seconds. Record the final reading and calculate the RF.

8.2.5 Determination of coating VOC content as VOC (V_{IJ}).

8.2.5.1 Determine the VOC content of the coatings used in the process using EPA Method 24 or 24A as applicable.

9. Data Analysis and Calculations

9.1. Nomenclature.

B_V=Volume of bag sample volume, liters.

C_{C3}=Concentration of bag sample as propane, mg/liter.

C_{VOC}=Concentration of bag sample as VOC, mg/liter.

K=0.00183 mg propane/(liter-ppm propane)

L=Total VOC content of liquid input, kg propane.

M_L=Mass of VOC liquid injected into the bag, mg.

M_V=Volume of gas measured by DGM, liters.

P_M=Absolute DGM gas pressure, mm Hg.

P_{STD}=Standard absolute pressure, 760 mm Hg.

R_{C3}=FIA reading for bag gas sample, ppm propane.

RF=Response factor for VOC in liquid, weight VOC/weight propane.

RF_J=Response factor for VOC in liquid J, weight VOC/weight propane.

T_M=DGM temperature, °K.

T_{STD}=Standard absolute temperature, 293 °K.

V_{IJ}=Initial VOC weight fraction of VOC liquid J.

V_{FJ}=Final VOC weight fraction of VOC liquid J.

V_{AJ}=VOC weight fraction of VOC liquid J added during the run.

W_{IJ}=Weight of VOC containing liquid J at beginning of run, kg.

W_{FJ}=Weight of VOC containing liquid J at end of run, kg.

W_{AJ}=Weight of VOC containing liquid J added during the run, kg.

9.2 Calculations.

9.2.1 Bag sample volume.

$$B_V = \frac{M_V T_{STD} P_M}{T_M P_{STD}} \qquad \text{Eq. 204F-1}$$

9.2.2 Bag sample VOC concentration.

$$C_{VOC} = \frac{M_L}{B_V} \qquad \text{Eq. 204F-2}$$

9.2.3 Bag sample VOC concentration as propane.

$$C_{C_3} = R_{C_3} K \qquad \text{Eq. 204F-3}$$

9.2.4 Response Factor.

$$RF = \frac{C_{VOC}}{C_{C_3}} \qquad \text{Eq. 204F-4}$$

9.2.5 Total VOC Content of the Input VOC Containing Liquid.

$$L = \sum_{j=1}^{n} \frac{V_{rj} W_{rj}}{RF_J} - \sum_{j=1}^{n} \frac{V_{Fj} W_{Fj}}{RF_J} + \sum_{j=1}^{n} \frac{V_{Aj} W_{Aj}}{RF_J} \qquad \text{Eq. 204F-5}$$

10. Diagrams

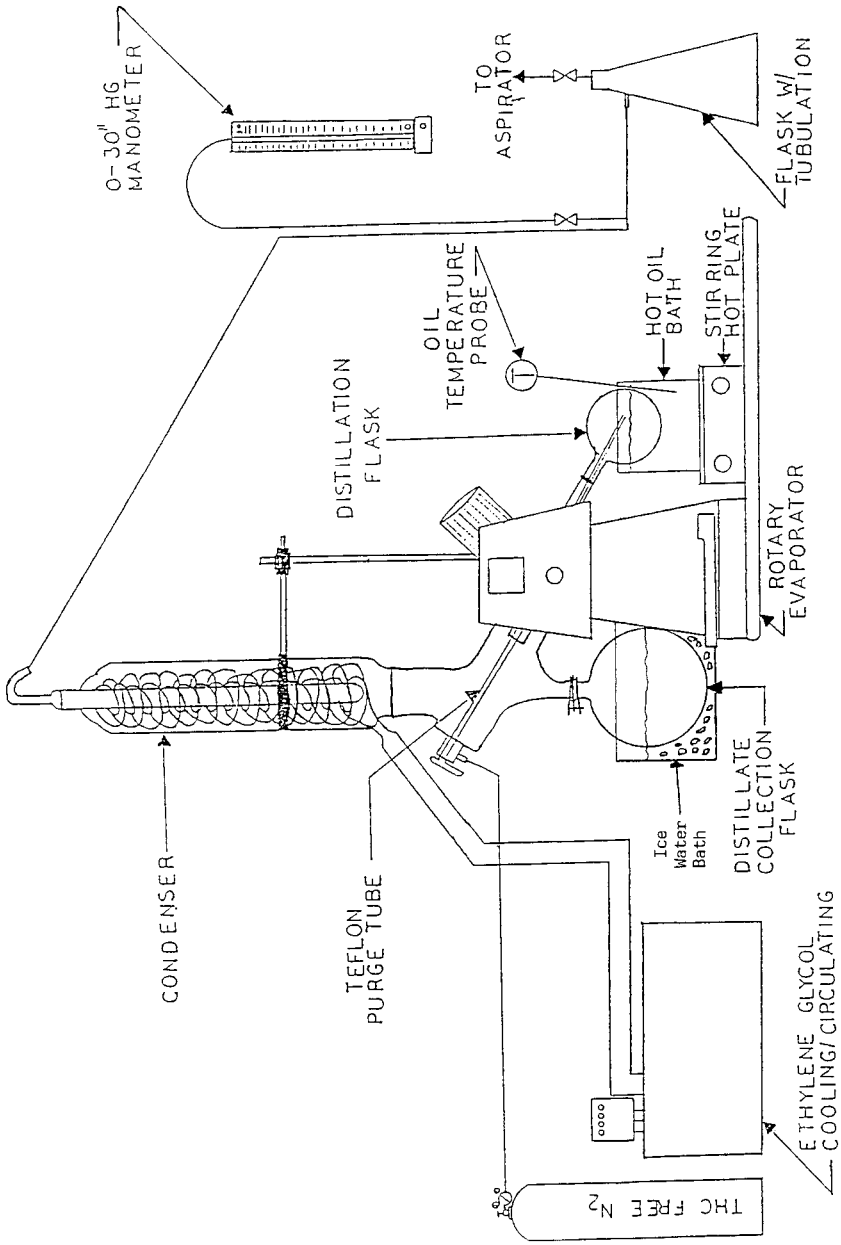

Figure 204F-1. VOC distillation system apparatus.

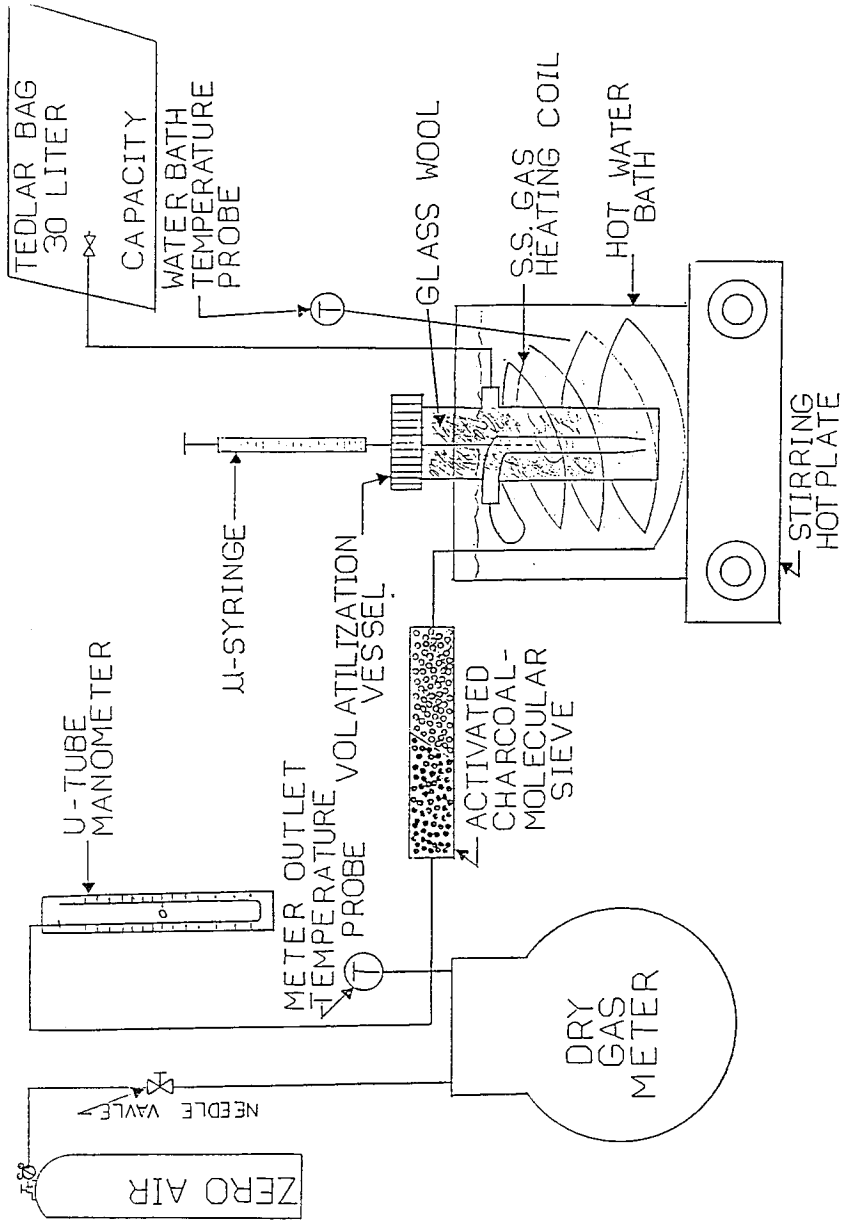

Figure 204F-2. Tedlar gas bag generation system apparatus.

METHOD 205—VERIFICATION OF GAS DILUTION SYSTEMS FOR FIELD INSTRUMENT CALIBRATIONS

1. Introduction

1.1 Applicability. A gas dilution system can provide known values of calibration gases through controlled dilution of high-level calibration gases with an appropriate dilution gas. The instrumental test methods in 40 CFR part 60—e.g., Methods 3A, 6C, 7E, 10, 15, 16, 20, 25A and 25B—require on-site, multi-point calibration using gases of known concentrations. A gas dilution system that produces known low-level calibration gases from high-level calibration gases, with a degree of confidence similar to that for Protocol[1] gases, may be used for compliance tests in lieu of multiple calibration gases when the gas dilution system is demonstrated to meet the requirements of this method. The Administrator may also use a gas dilution system in order to produce a wide range of Cylinder Gas Audit concentrations when conducting performance specifications according to appendix F, 40 CFR part 60. As long as the acceptance criteria of this method are met, this method is applicable to gas dilution systems using any type of dilution technology, not solely the ones mentioned in this method.

1.2 Principle. The gas dilution system shall be evaluated on one analyzer once during each field test. A precalibrated analyzer is chosen, at the discretion of the source owner or operator, to demonstrate that the gas dilution system produces predictable gas concentrations spanning a range of concentrations. After meeting the requirements of this method, the remaining analyzers may be calibrated with the dilution system in accordance to the requirements of the applicable method for the duration of the field test. In Methods 15 and 16, 40 CFR part 60, appendix A, reactive compounds may be lost in the gas dilution system. Also, in Methods 25A and 25B, 40 CFR part 60, appendix A, calibration with target compounds other than propane is allowed. In these cases, a laboratory evaluation is required once per year in order to assure the Administrator that the system will dilute these reactive gases without significant loss.

NOTE: The laboratory evaluation is required only if the source owner or operator plans to utilize the dilution system to prepare gases mentioned above as being reactive.

2. Specifications

2.1 Gas Dilution System. The gas dilution system shall produce calibration gases whose measured values are within ±2 percent of the predicted values. The predicted values are calculated based on the certified concentration of the supply gas (Protocol gases, when available, are recommended for their accuracy) and the gas flow rates (or dilution ratios) through the gas dilution system.

2.1.1 The gas dilution system shall be recalibrated once per calendar year using NIST-traceable primary flow standards with an uncertainty ≤0.25 percent. A label shall be affixed at all times to the gas dilution system listing the date of the most recent calibration, the due date for the next calibration, and the person or manufacturer who carried out the calibration. Follow the manufacturer's instructions for the operation and use of the gas dilution system. A copy of the manufacturer's instructions for the operation of the instrument, as well as the most recent recalibration documentation shall be made available for the Administrator's inspection upon request.

2.1.2 Some manufacturers of mass flow controllers recommend that flow rates below 10 percent of flow controller capacity be avoided; check for this recommendation and follow the manufacturer's instructions. One study has indicated that silicone oil from a positive displacement pump produces an interference in SO_2 analyzers utilizing ultraviolet fluorescence; follow laboratory procedures similar to those outlined in Section 3.1 in order to demonstrate the significance of any resulting effect on instrument performance.

2.2 High-Level Supply Gas. An EPA Protocol calibration gas is recommended, due to its accuracy, as the high-level supply gas.

2.3 Mid-Level Supply Gas. An EPA Protocol gas shall be used as an independent check of the dilution system. The concentration of the mid-level supply gas shall be within 10 percent of one of the dilution levels tested in Section 3.2.

3. Performance Tests

3.1 Laboratory Evaluation (Optional). If the gas dilution system is to be used to formulate calibration gases with reactive compounds (Test Methods 15, 16, and 25A/25B (only if using a calibration gas other than propane during the field test) in 40 CFR part 60, appendix A), a laboratory certification must be conducted once per calendar year for each reactive compound to be diluted. In the laboratory, carry out the procedures in Section 3.2 on the analyzer required in each respective test method to be laboratory certified (15, 16, or 25A and 25B for compounds other than propane). For each compound in which the gas dilution system meets the requirements in Section 3.2, the source must provide the laboratory certification data for the field test and in the test report.

3.2 Field Evaluation (Required). The gas dilution system shall be evaluated at the test site with an analyzer or monitor chosen by the source owner or operator. It is recommended that the source owner or operator choose a precalibrated instrument with a

high level of precision and accuracy for the purposes of this test. This method is not meant to replace the calibration requirements of test methods. In addition to the requirements in this method, all the calibration requirements of the applicable test method must also be met.

3.2.1 Prepare the gas dilution system according to the manufacturer's instructions. Using the high-level supply gas, prepare, at a minimum, two dilutions within the range of each dilution device utilized in the dilution system (unless, as in critical orifice systems, each dilution device is used to make only one dilution; in that case, prepare one dilution for each dilution device). Dilution device in this method refers to each mass flow controller, critical orifice, capillary tube, positive displacement pump, or any other device which is used to achieve gas dilution.

3.2.2 Calculate the predicted concentration for each of the dilutions based on the flow rates through the gas dilution system (or the dilution ratios) and the certified concentration of the high-level supply gas.

3.2.3 Introduce each of the dilutions from Section 3.2.1 into the analyzer or monitor one at a time and determine the instrument response for each of the dilutions.

3.2.4 Repeat the procedure in Section 3.2.3 two times, i.e., until three injections are made at each dilution level. Calculate the average instrument response for each triplicate injection at each dilution level. No single injection shall differ by more than ±2 percent from the average instrument response for that dilution.

3.2.5 For each level of dilution, calculate the difference between the average concentration output recorded by the analyzer and the predicted concentration calculated in Section 3.2.2. The average concentration output from the analyzer shall be within ±2 percent of the predicted value.

3.2.6 Introduce the mid-level supply gas directly into the analyzer, bypassing the gas dilution system. Repeat the procedure twice more, for a total of three mid-level supply gas injections. Calculate the average analyzer output concentration for the mid-level supply gas. The difference between the certified concentration of the mid-level supply gas and the average instrument response shall be within ±2 percent.

3.3 If the gas dilution system meets the criteria listed in Section 3.2, the gas dilution system may be used throughout that field test. If the gas dilution system fails any of the criteria listed in Section 3.2, and the tester corrects the problem with the gas dilution system, the procedure in Section 3.2 must be repeated in its entirety and all the criteria in Section 3.2 must be met in order for the gas dilution system to be utilized in the test.

4. References

1. ''EPA Traceability Protocol for Assay and Certification of Gaseous Calibration Standards,'' EPA–600/R93/224, Revised September 1993.

[55 FR 14249, Apr. 17, 1990; 55 FR 24687, June 18, 1990, as amended at 55 FR 37606, Sept. 12, 1990; 56 FR 6278, Feb. 15, 1991; 56 FR 65435, Dec. 17, 1991; 60 FR 28054, May 30, 1995; 62 FR 32502, June 16, 1997]

APPENDIXES N–O [RESERVED]

APPENDIX P TO PART 51—MINIMUM EMISSION MONITORING REQUIREMENTS

1.0 *Purpose.* This appendix P sets forth the minimum requirements for continuous emission monitoring and recording that each State Implementation Plan must include in order to be approved under the provisions of 40 CFR 51.165(b). These requirements include the source categories to be affected; emission monitoring, recording, and reporting requirements for those sources; performance specifications for accuracy, reliability, and durability of acceptable monitoring systems; and techniques to convert emission data to units of the applicable State emission standard. Such data must be reported to the State as an indication of whether proper maintenance and operating procedures are being utilized by source operators to maintain emission levels at or below emission standards. Such data may be used directly or indirectly for compliance determination or any other purpose deemed appropriate by the State. Though the monitoring requirements are specified in detail, States are given some flexibility to resolve difficulties that may arise during the implementation of these regulations.

1.1 *Applicability.* The State plan shall require the owner or operator of an emission source in a category listed in this appendix to: (1) Install, calibrate, operate, and maintain all monitoring equipment necessary for continuously monitoring the pollutants specified in this appendix for the applicable source category; and (2) complete the installation and performance tests of such equipment and begin monitoring and recording within 18 months of plan approval or promulgation. The source categories and the respective monitoring requirements are listed below.

1.1.1 Fossil fuel-fired steam generators, as specified in paragraph 2.1 of this appendix, shall be monitored for opacity, nitrogen oxides emissions, sulfur dioxide emissions, and oxygen or carbon dioxide.

1.1.2 Fluid bed catalytic cracking unit catalyst regenerators, as specified in paragraph 2.4 of this appendix, shall be monitored for opacity.

1.1.3 Sulfuric acid plants, as specified in paragraph 2.3 of this appendix, shall be monitored for sulfur dioxide emissions.

1.1.4 Nitric acid plants, as specified in paragraph 2.2 of this appendix, shall be monitored for nitrogen oxides emissions.

1.2 *Exemptions.* The States may include provisions within their regulations to grant exemptions from the monitoring requirements of paragraph 1.1 of this appendix for any source which is:

1.2.1 Subject to a new source performance standard promulgated in 40 CFR part 60 pursuant to section 111 of the Clean Air Act; or

1.2.2 not subject to an applicable emission standard of an approved plan; or

1.2.3 scheduled for retirement within 5 years after inclusion of monitoring requirements for the source in appendix P, provided that adequate evidence and guarantees are provided that clearly show that the source will cease operations prior to such date.

1.3 *Extensions.* States may allow reasonable extensions of the time provided for installation of monitors for facilities unable to meet the prescribed timeframe (i.e., 18 months from plan approval or promulgation) provided the owner or operator of such facility demonstrates that good faith efforts have been made to obtain and install such devices within such prescribed timeframe.

1.4 *Monitoring System Malfunction.* The State plan may provide a temporary exemption from the monitoring and reporting requirements of this appendix during any period of monitoring system malfunction, provided that the source owner or operator shows, to the satisfaction of the State, that the malfunction was unavoidable and is being repaired as expeditiously as practicable.

2.0 *Minimum Monitoring Requirement.* States must, as a minimum, require the sources listed in paragraph 1.1 of this appendix to meet the following basic requirements.

2.1 *Fossil fuel-fired steam generators.* Each fossil fuel-fired steam generator, except as provided in the following subparagraphs, with an annual average capacity factor of greater than 30 percent, as reported to the Federal Power Commission for calendar year 1974, or as otherwise demonstrated to the State by the owner or operator, shall conform with the following monitoring requirements when such facility is subject to an emission standard of an applicable plan for the pollutant in question.

2.1.1 A continuous monitoring system for the measurement of opacity which meets the performance specifications of paragraph 3.1.1 of this appendix shall be installed, calibrated, maintained, and operated in accordance with the procedures of this appendix by the owner or operator of any such steam generator of greater than 250 million BTU per hour heat input except where:

2.1.1.1 gaseous fuel is the only fuel burned, or

2.1.1.2 oil or a mixture of gas and oil are the only fuels burned and the source is able to comply with the applicable particulate matter and opacity regulations without utilization of particulate matter collection equipment, and where the source has never been found, through any administrative or judicial proceedings, to be in violation of any visible emission standard of the applicable plan.

2.1.2 A continuous monitoring system for the measurement of sulfur dioxide which meets the performance specifications of paragraph 3.1.3 of this appendix shall be installed, calibrated, maintained, and operated on any fossil fuel-fired steam generator of greater than 250 million BTU per hour heat input which has installed sulfur dioxide pollutant control equipment.

2.1.3 A continuous monitoring system for the measurement of nitrogen oxides which meets the performance specification of paragraph 3.1.2 of this appendix shall be installed, calibrated, maintained, and operated on fossil fuel-fired steam generators of greater than 1000 million BTU per hour heat input when such facility is located in an Air Quality Control Region where the Administrator has specifically determined that a control strategy for nitrogen dioxide is necessary to attain the national standards, unless the source owner or operator demonstrates during source compliance tests as required by the State that such a source emits nitrogen oxides at levels 30 percent or more below the emission standard within the applicable plan.

2.1.4 A continuous monitoring system for the measurement of the percent oxygen or carbon dioxide which meets the performance specifications of paragraphs 3.1.4 or 3.1.5 of this appendix shall be installed, calibrated, operated, and maintained on fossil fuel-fired steam generators where measurements of oxygen or carbon dioxide in the flue gas are required to convert either sulfur dioxide or nitrogen oxides continuous emission monitoring data, or both, to units of the emission standard within the applicable plan.

2.2 *Nitric acid plants.* Each nitric acid plant of greater than 300 tons per day production capacity, the production capacity being expressed as 100 percent acid, located in an Air Quality Control Region where the Administrator has specifically determined that a control strategy for nitrogen dioxide is necessary to attain the national standard shall install, calibrate, maintain, and operate a continuous monitoring system for the measurement of nitrogen oxides which meets the performance specifications of paragraph 3.1.2 for each nitric acid producing facility within such plant.

2.3 *Sulfuric acid plants.* Each Sulfuric acid plant of greater than 300 tons per day production capacity, the production being expressed as 100 percent acid, shall install, calibrate, maintain and operate a continuous monitoring system for the measurement of sulfur dioxide which meets the performance specifications of paragraph 3.1.3 for each sulfuric acid producing facility within such plant.

2.4 *Fluid bed catalytic cracking unit catalyst regenerators at petroleum refineries.* Each catalyst regenerator for fluid bed catalytic cracking units of greater than 20,000 barrels per day fresh feed capacity shall install, calibrate, maintain, and operate a continuous monitoring system for the measurement of opacity which meets the performance specifications of paragraph 3.1.1.

3.0 *Minimum specifications.* All State plans shall require owners or operators of monitoring equipment installed to comply with this appendix, except as provided in paragraph 3.2, to demonstrate compliance with the following performance specifications.

3.1 *Performance specifications.* The performance specifications set forth in appendix B of part 60 are incorporated herein by reference, and shall be used by States to determine acceptability of monitoring equipment installed pursuant to this appendix except that (1) where reference is made to the ''Administrator'' in appendix B, part 60, the term *State* should be inserted for the purpose of this appendix (e.g., in Performance Specification 1, 1.2, '' * * * monitoring systems subject to approval by the *Administrator,*'' should be interpreted as, ''* * * monitoring systems subject to approval by the *State*''), and (2) where reference is made to the ''Reference Method'' in appendix B, part 60, the State may allow the use of either the State approved reference method or the Federally approved reference method as published in part 60 of this chapter. The Performance Specifications to be used with each type of monitoring system are listed below.

3.1.1 Continuous monitoring systems for measuring opacity shall comply with Performance Specification 1.

3.1.2 Continuous monitoring systems for measuring nitrogen oxides shall comply with Performance Specification 2.

3.1.3 Continuous monitoring systems for measuring sulfur dioxide shall comply with Performance Specification 2.

3.1.4 Continuous monitoring systems for measuring oxygen shall comply with Performance Specification 3.

3.1.5 Continuous monitoring systems for measuring carbon dioxide shall comply with Performance Specification 3.

3.2 *Exemptions.* Any source which has purchased an emission monitoring system(s) prior to September 11, 1974, may be exempt from meeting such test procedures prescribed in appendix B of part 60 for a period not to exceed five years from plan approval or promulgation.

3.3 *Calibration Gases.* For nitrogen oxides monitoring systems installed on fossil fuel-fired steam generators the pollutant gas used to prepare calibration gas mixtures (Section 2.1, Performance Specification 2, appendix B, part 60) shall be nitric oxide (NO). For nitrogen oxides monitoring systems, installed on nitric acid plants the pollutant gas used to prepare calibration gas mixtures (Section 2.1, Performance Specification 2, appendix B, part 60 of this chapter) shall be nitrogen dioxide (NO_2). These gases shall also be used for daily checks under paragraph 3.7 of this appendix as applicable. For sulfur dioxide monitoring systems installed on fossil fuel-fired steam generators or sulfuric acid plants the pollutant gas used to prepare calibration gas mixtures (Section 2.1, Performance Specification 2, appendix B, part 60 of this chapter) shall be sulfur dioxide (SO_2). Span and zero gases should be traceable to National Bureau of Standards reference gases whenever these reference gases are available. Every six months from date of manufacture, span and zero gases shall be reanalyzed by conducting triplicate analyses using the reference methods in appendix A, part 60 of this chapter as follows: for sulfur dioxide, use Reference Method 6; for nitrogen oxides, use Reference Method 7; and for carbon dioxide or oxygen, use Reference Method 3. The gases may be analyzed at less frequent intervals if longer shelf lives are guaranteed by the manufacturer.

3.4 *Cycling times.* Cycling times include the total time a monitoring system requires to sample, analyze and record an emission measurement.

3.4.1 Continuous monitoring systems for measuring opacity shall complete a minimum of one cycle of operation (sampling, analyzing, and data recording) for each successive 10-second period.

3.4.2 Continuous monitoring systems for measuring oxides of nitrogen, carbon dioxide, oxygen, or sulfur dioxide shall complete a minimum of one cycle of operation (sampling, analyzing, and data recording) for each successive 15-minute period.

3.5 *Monitor location.* State plans shall require all continuous monitoring systems or monitoring devices to be installed such that representative measurements of emissions or process parameters (i.e., oxygen, or carbon dioxide) from the affected facility are obtained. Additional guidance for location of continuous monitoring systems to obtain representative samples are contained in the applicable Performance Specifications of appendix B of part 60 of this chapter.

3.6 *Combined effluents.* When the effluents from two or more affected facilities of similar design and operating characteristics are combined before being released to the atmosphere, the State plan may allow monitoring

systems to be installed on the combined effluent. When the affected facilities are not of similar design and operating characteristics, or when the effluent from one affected facility is released to the atmosphere through more than one point, the State should establish alternate procedures to implement the intent of these requirements.

3.7 *Zero and drift.* State plans shall require owners or operators of all continuous monitoring systems installed in accordance with the requirements of this appendix to record the zero and span drift in accordance with the method prescribed by the manufacturer of such instruments; to subject the instruments to the manufacturer's recommended zero and span check at least once daily unless the manufacturer has recommended adjustments at shorter intervals, in which case such recommendations shall be followed; to adjust the zero and span whenever the 24-hour zero drift or 24-hour calibration drift limits of the applicable performance specifications in appendix B of part 60 are exceeded; and to adjust continuous monitoring systems referenced by paragraph 3.2 of this appendix whenever the 24-hour zero drift or 24-hour calibration drift exceed 10 percent of the emission standard.

3.8 *Span.* Instrument span should be approximately 200 per cent of the expected instrument data display output corresponding to the emission standard for the source.

3.9 *Alternative procedures and requirements.* In cases where States wish to utilize different, but equivalent, procedures and requirements for continuous monitoring systems, the State plan must provide a description of such alternative procedures for approval by the Administrator. Some examples of situations that may require alternatives follow:

3.9.1 Alternative monitoring requirements to accommodate continuous monitoring systems that require corrections for stack moisture conditions (e.g., an instrument measuring steam generator SO_2 emissions on a wet basis could be used with an instrument measuring oxygen concentration on a dry basis if acceptable methods of measuring stack moisture conditions are used to allow accurate adjustments of the measured SO_2 concentration to dry basis.)

3.9.2 Alternative locations for installing continuous monitoring systems or monitoring devices when the owner or operator can demonstrate that installation at alternative locations will enable accurate and representative measurements.

3.9.3 Alternative procedures for performing calibration checks (e.g., some instruments may demonstrate superior drift characteristics that require checking at less frequent intervals).

3.9.4 Alternative monitoring requirements when the effluent from one affected facility or the combined effluent from two or more identical affected facilities is released to the atmosphere through more than one point (e.g., an extractive, gaseous monitoring system used at several points may be approved if the procedures recommended are suitable for generating accurate emission averages).

3.9.5 Alternative continuous monitoring systems that do not meet the spectral response requirements in Performance Specification 1, appendix B of part 60, but adequately demonstrate a definite and consistent relationship between their measurements and the opacity measurements of a system complying with the requirements in Performance Specification 1. The State may require that such demonstration be performed for each affected facility.

4.0 *Minimum data requirements.* The following paragraphs set forth the minimum data reporting requirements necessary to comply with §51.214(d) and (e).

4.1 The State plan shall require owners or operators of facilities required to install continuous monitoring systems to submit a written report of excess emissions for each calendar quarter and the nature and cause of the excess emissions, if known. The averaging period used for data reporting should be established by the State to correspond to the averaging period specified in the emission test method used to determine compliance with an emission standard for the pollutant/source category in question. The required report shall include, as a minimum, the data stipulated in this appendix.

4.2 For opacity measurements, the summary shall consist of the magnitude in actual percent opacity of all one-minute (or such other time period deemed appropriate by the State) averages of opacity greater than the opacity standard in the applicable plan for each hour of operation of the facility. Average values may be obtained by integration over the averaging period or by arithmetically averaging a minimum of four equally spaced, instantaneous opacity measurements per minute. Any time period exempted shall be considered before determining the excess averages of opacity (e.g., whenever a regulation allows two minutes of opacity measurements in excess of the standard, the State shall require the source to report all opacity averages, in any one hour, in excess of the standard, minus the two-minute exemption). If more than one opacity standard applies, excess emissions data must be submitted in relation to all such standards.

4.3 For gaseous measurements the summary shall consist of emission averages, in the units of the applicable standard, for each averaging period during which the applicable standard was exceeded.

4.4 The date and time identifying each period during which the continuous monitoring system was inoperative, except for zero and

span checks, and the nature of system repairs or adjustments shall be reported. The State may require proof of continuous monitoring system performance whenever system repairs or adjustments have been made.

4.5 When no excess emissions have occurred and the continuous monitoring system(s) have not been inoperative, repaired, or adjusted, such information shall be included in the report.

4.6 The State plan shall require owners or operators of affected facilities to maintain a file of all information reported in the quarterly summaries, and all other data collected either by the continuous monitoring system or as necessary to convert monitoring data to the units of the applicable standard for a minimum of two years from the date of collection of such data or submission of such summaries.

5.0 *Data Reduction*. The State plan shall require owners or operators of affected facilities to use the following procedures for converting monitoring data to units of the standard where necessary.

5.1 For fossil fuel-fired steam generators the following procedures shall be used to convert gaseous emission monitoring data in parts per million to g/million cal (lb/million BTU) where necessary:

5.1.1 When the owner or operator of a fossil fuel-fired steam generator elects under paragraph 2.1.4 of this appendix to measure oxygen in the flue gases, the measurements of the pollutant concentration and oxygen concentration shall each be on a dry basis and the following conversion procedure used:

$$E = CF\ [20.9/20.9 - \%O_2]$$

5.1.2 When the owner or operator elects under paragraph 2.1.4 of this appendix to measure carbon dioxide in the flue gases, the measurement of the pollutant concentration and the carbon dioxide concentration shall each be on a consistent basis (wet or dry) and the following conversion procedure used:

$$E = CF_c\ (100 / \%CO_2)$$

5.1.3 The values used in the equations under paragraph 5.1 are derived as follows:

E = pollutant emission, g/million cal (lb/million BTU),

C = pollutant concentration, g/dscm (lb/dscf), determined by multiplying the average concentration (ppm) for each hourly period by 4.16×10^{-5} M g/dscm per ppm (2.64×10^{-9} M lb/dscf per ppm) where M = pollutant molecular weight, g/g-mole (lb/lb-mole). M = 64 for sulfur dioxide and 46 for oxides of nitrogen.

$\%O_2$, $\%CO_2$ = Oxygen or carbon dioxide volume (expressed as percent) determined with equipment specified under paragraph 4.1.4 of this appendix,

F, F_c = a factor representing a ratio of the volume of dry flue gases generated to the calorific value of the fuel combusted (F), and a factor representing a ratio of the volume of carbon dioxide generated to the calorific value of the fuel combusted (F_c) respectively. Values of F and F_c are given in §60.45(f) of part 60, as applicable.

5.2 For sulfuric acid plants the owner or operator shall:

5.2.1 establish a conversion factor three times daily according to the procedures to §60.84(b) of this chapter;

5.2.2 multiply the conversion factor by the average sulfur dioxide concentration in the flue gases to obtain average sulfur dioxide emissions in Kg/metric ton (lb/short ton); and

5.2.3 report the average sulfur dioxide emission for each averaging period in excess of the applicable emission standard in the quarterly summary.

5.3 For nitric acid plants the owner or operator shall:

5.3.1 establish a conversion factor according to the procedures of §60.73(b) of this chapter;

5.3.2 multiply the conversion factor by the average nitrogen oxides concentration in the flue gases to obtain the nitrogen oxides emissions in the units of the applicable standard;

5.3.3 report the average nitrogen oxides emission for each averaging period in excess of the applicable emission standard, in the quarterly summary.

5.4 Any State may allow data reporting or reduction procedures varying from those set forth in this appendix if the owner or operator of a source shows to the satisfaction of the State that his procedures are at least as accurate as those in this appendix. Such procedures may include but are not limited to, the following:

5.4.1 Alternative procedures for computing emission averages that do not require integration of data (e.g., some facilities may demonstrate that the variability of their emissions is sufficiently small to allow accurate reduction of data based upon computing averages from equally spaced data points over the averaging period).

5.4.2 Alternative methods of converting pollutant concentration measurements to the units of the emission standards.

6.0 *Special Consideration*. The State plan may provide for approval, on a case-by-case basis, of alternative monitoring requirements different from the provisions of parts 1 through 5 of this appendix if the provisions of this appendix (i.e., the installation of a continuous emission monitoring system) cannot be implemented by a source due to physical plant limitations or extreme economic reasons. To make use of this provision, States must include in their plan specific criteria for determining those physical limitations or extreme economic situations

to be considered by the State. In such cases, when the State exempts any source subject to this appendix by use of this provision from installing continuous emission monitoring systems, the State shall set forth alternative emission monitoring and reporting requirements (e.g., periodic manual stack tests) to satisfy the intent of these regulations. Examples of such special cases include, but are not limited to, the following:

6.1 Alternative monitoring requirements may be prescribed when installation of a continuous monitoring system or monitoring device specified by this appendix would not provide accurate determinations of emissions (e.g., condensed, uncombined water vapor may prevent an accurate determination of opacity using commercially available continuous monitoring systems).

6.2 Alternative monitoring requirements may be prescribed when the affected facility is infrequently operated (e.g., some affected facilities may operate less than one month per year).

6.3 Alternative monitoring requirements may be prescribed when the State determines that the requirements of this appendix would impose an extreme economic burden on the source owner or operator.

6.4 Alternative monitoring requirements may be prescribed when the State determines that monitoring systems prescribed by this appendix cannot be installed due to physical limitations at the facility.

[40 FR 46247, Oct. 6, 1975, as amended at 51 FR 40675, Nov. 7, 1986]

APPENDIXES Q–R [RESERVED]

APPENDIX S TO PART 51—EMISSION OFFSET INTERPRETATIVE RULING

I. INTRODUCTION

This appendix sets forth EPA's Interpretative Ruling on the preconstruction review requirements for stationary sources of air pollution (not including indirect sources) under 40 CFR subpart I and section 129 of the Clean Air Act Amendments of 1977, Public Law 95–95, (note under 42 U.S.C. 7502). A major new source or major modification which would locate in an area designated in 40 CFR 81.300 *et seq.*, as nonattainment for a pollutant for which the source or modification would be major may be allowed to construct only if the stringent conditions set forth below are met. These conditions are designed to insure that the new source's emissions will be controlled to the greatest degree possible; that more than equivalent offsetting emission reductions (*emission offsets*) will be obtained from existing sources; and that there will be progress toward achievement of the NAAQS.

For each area designated as exceeding an NAAQS (nonattainment area) under 40 CFR 81.300 *et seq.*, this Interpretative Ruling will be superseded after June 30, 1979—(a) by preconstruction review provisions of the revised SIP, if the SIP meets the requirements of Part D, Title 1, of the Act; or (b) by a prohibition on construction under the applicable SIP and section 110(a)(2)(I) of the Act, if the SIP does not meet the requirements of Part D. The Ruling will remain in effect to the extent not superseded under the Act. This prohibition on major new source construction does not apply to a source whose permit to construct was applied for during a period when the SIP was in compliance with Part D, or before the deadline for having a revised SIP in effect that satisfies Part D.

The requirement of this Ruling shall not apply to any major stationary source or major modification that was not subject to the Ruling as in effect on January 16, 1979, if the owner or operator:

A. Obtained all final Federal, State, and local preconstruction approvals or permits necessary under the applicable State Implementation Plan before August 7, 1980;

B. Commenced construction within 18 months from August 7, 1980, or any earlier time required under the applicable State Implementation Plan; and

C. Did not discontinue construction for a period of 18 months or more and completed construction within a reasonable time.

II. INITIAL SCREENING ANALYSES AND DETERMINATION OF APPLICABLE REQUIREMENTS

A. *Definitions*— For the purposes of this Ruling:

1. *Stationary source* means any building, structure, facility, or installation which emits or may emit any air pollutant subject to regulation under the Act.

2. *Building, structure, facility or installation* means all of the pollutant-emitting activities which belong to the same industrial grouping, are located on one or more contiguous or adjacent properties, and are under the control of the same person (or persons under common control) except the activities of any vessel. Pollutant-emitting activities shall be considered as part of the same industrial grouping if they belong to the same "Major Group" (i.e., which have the same two digit code) as described in the *Standard Industrial Classification Manual*, 1972, as amended by the 1977 Supplement (U.S. Government Printing Office stock numbers 4101–0066 and 003–005–00176–0, respectively).

3. *Potential to emit* means the maximum capacity of a stationary source to emit a pollutant under its physical and operational design. Any physical or operational limitation on the capacity of the source to emit a pollutant, including air pollution control equipment and restrictions on hours of operation or on the type or amount of material combusted, stored, or processed, shall be treated as part of its design only if the limitation or

the effect it would have on emissions is federally enforceable. Secondary emissions do not count in determining the potential to emit of a stationary source.

4. (i) *Major stationary source* means:

(*a*) Any stationary source of air pollutants which emits, or has the potential to emit, 100 tons per year or more of any pollutant subject to regulation under the Act; or

(*b*) Any physical change that would occur at a stationary source not qualifying under paragraph 5.(i)(*a*) of section II of this appendix as a major stationary source, if the change would constitute a major stationary source by itself.

(ii) A major stationary source that is major for volatile organic compounds shall be considered major for ozone.

(iii) The fugitive emissions of a stationary source shall not be included in determining for any of the purposes of this ruling whether it is a major stationary source, unless the source belongs to one of the following categories of stationary sources:

(*a*) Coal cleaning plants (with thermal dryers);

(*b*) Kraft pulp mills;

(*c*) Portland cement plants;

(*d*) Primary zinc smelters;

(*e*) Iron and steel mills;

(*f*) Primary aluminum ore reduction plants;

(*g*) Primary copper smelters;

(*h*) Municipal incinerators capable of charging more than 250 tons of refuse per day;

(*i*) Hydrofluoric, sulfuric, or nitric acid plants;

(*j*) Petroleum refineries;

(*k*) Lime plants;

(*l*) Phosphate rock processing plants;

(*m*) Coke oven batteries;

(*n*) Sulfur recovery plants;

(*o*) Carbon black plants (furnace process);

(*p*) Primary lead smelters;

(*q*) Fuel conversion plants;

(*r*) Sintering plants;

(*s*) Secondary metal production plants;

(*t*) Chemical process plants;

(*u*) Fossil-fuel boilers (or combination thereof) totaling more than 250 million British thermal units per hour heat input;

(*v*) Petroleum storage and transfer units with a total storage capacity exceeding 300,000 barrels;

(*w*) Taconite ore processing plants;

(*x*) Glass fiber processing plants;

(*y*) Charcoal production plants;

(*z*) Fossil fuel-fired steam electric plants of more than 250 million British thermal units per hour heat input;

(*aa*) Any other stationary source category which, as of August 7, 1980, is being regulated under section 111 or 112 of the Act.

5. (i) *Major modification* means any physical change in or change in the method of operation of a major stationary source that would result in a significant net emissions increase of any pollutant subject to regulation under the Act.

(ii) Any net emissions increase that is considered significant for volatile organic compounds shall be considered significant for ozone.

(iii) A physical change or change in the method of operation shall not include:

(*a*) Routine maintenance, repair, and replacement;

(*b*) Use of an alternative fuel or raw material by reason of an order under section 2 (a) and (b) of the Energy Supply and Environmental Coordination Act of 1974 (or any superseding legislation) or by reason of a natural gas curtailment plan pursuant to the Federal Power Act;

(*c*) Use of an alternative fuel by reason of an order or rule under section 125 of the Act;

(*d*) Use of an alternative fuel at a steam generating unit to the extent that the fuel is generated from municipal solid waste;

(*e*) Use of an alternative fuel or raw material by a stationary source which:

(*1*) The source was capable of accommodating before December 21, 1976, unless such change would be prohibited under any federally enforceable permit condition which was established after December 21, 1976, pursuant to 40 CFR 52.21 or under regulations approved pursuant to 40 CFR subpart I or §51.166; or

(*2*) The source is approved to use under any permit issued under this ruling;

(*f*) An increase in the hours of operation or in the production rate, unless such change is prohibited under any federally enforceable permit condition which was established after December 21, 1976 pursuant to 40 CFR 52.21 or under regulations approved pursuant to 40 CFR subpart I or §51.166;

(*g*) Any change in ownership at a stationary source.

6. (i) *Net emissions increase* means the amount by which the sum of the following exceeds zero:

(*a*) Any increase in actual emissions from a particular physical change or change in the method of operation at a stationary source; and

(*b*) Any other increases and decreases in actual emissions at the source that are contemporaneous with the particular change and are otherwise creditable.

(ii) An increase or decrease in actual emissions is contemporaneous with the increase from the particular change only if it occurs between:

(*a*) The date five years before construction on the particular change commences and

(*b*) The date that the increase from the particular change occurs.

(iii) An increase or decrease in actual emissions is creditable only if the Administrator has not relied on it in issuing a permit

for the source under this Ruling which permit is in effect when the increase in actual emissions from the particular change occurs.

(iv) An increase in actual emissions is creditable only to the extent that the new level of actual emissions exceeds the old level.

(v) A decrease in actual emissions is creditable only to the extent that:

(*a*) The old level of actual emissions or the old level of allowable emissions, whichever is lower, exceeds the new level of actual emissions;

(*b*) It is federally enforceable at and after the time that actual construction on the particular change begins;

(*c*) The reviewing authority has not relied on it in issuing any permit under regulations approved pursuant to 40 CFR 51.18; and

(*d*) It has approximately the same qualitative significance for public health and welfare as that attributed to the increase from the particular change.

(vi) An increase that results from a physical change at a source occurs when the emissions unit on which construction occurred becomes operational and begins to emit a particular pollutant. Any replacement unit that requires shakedown becomes operational only after a reasonable shakedown period, not to exceed 180 days.

7. *Emissions unit* means any part of a stationary source which emits or would have the potential to emit any pollutant subject to regulation under the Act.

8. *Secondary emissions* means emissions which would occur as a result of the construction or operation of a major stationary source or major modification, but do not come from the major stationary source or major modification itself. For the purpose of this Ruling, secondary emissions must be specific, well defined, quantifiable, and impact the same general area as the stationary source or modification which causes the secondary emissions. Secondary emissions include emissions from any offsite support facility which would not be constructed or increase its emissions except as a result of the construction or operation of the major stationary source or major modification. Secondary emissions do not include any emissions which come directly from a mobile source, such as emissions from the tailpipe of a motor vehicle, from a train, or from a vessel.

9. *Fugitive emissions* means those emissions which could not reasonably pass through a stack, chimney, vent, or other functionally equivalent opening.

10. (i) *Significant* means, in reference to a net emissions increase or the potential of a source to emit any of the following pollutants, a rate of emissions that would equal or exceed any of the following rates:

Pollutant and Emissions Rate

Carbon monoxide: 100 tons per year (tpy)

Nitrogen oxides: 40 tpy

Sulfur dioxide: 40 tpy

Particulate matter: 25 tpy of particulate matter emissions

Ozone: 40 tpy of volatile organic compounds

Lead: 0.6 tpy

11. *Allowable emissions* means the emissions rate calculated using the maximum rated capacity of the source (unless the source is subject to federally enforceable limits which restrict the operating rate, or hours of operation, or both) and the most stringent of the following:

(i) Applicable standards as set forth in 40 CFR parts 60 and 61;

(ii) Any applicable State Implementation Plan emissions limitation, including those with a future compliance date; or

(iii) The emissions rate specified as a federally enforceable permit condition, including those with a future compliance date.

12. *Federally enforceable* means all limitations and conditions which are enforceable by the Administrator, including those requirements developed pursuant to 40 CFR parts 60 and 61, requirements within any applicable State implementation plan, any permit requirements established pursuant to 40 CFR 52.21 or under regulations approved pursuant to 40 CFR part 51, subpart I, including operating permits issued under an EPA-approved program that is incorporated into the State implementation plan and expressly requires adherence to any permit issued under such program.

13. (i) *Actual emissions* means the actual rate of emissions of a pollutant from an emissions unit as determined in accordance with paragraphs 16. (ii) through (iv) of Section II.A. of this appendix.

(ii) In general, actual emissions as of a particular date shall equal the average rate, in tons per year, at which the unit actually emitted the pollutant during a two-year period which precedes the particular date and which is representative of normal source operation. The reviewing authority shall allow the use of a different time period upon a determination that it is more representative of normal source operation. Actual emissions shall be calculated using the unit's actual operating hours, production rates, and types of materials processed, stored or combusted during the selected time period.

(iii) The reviewing authority may presume that source-specific allowable emissions for the unit are equivalent to the actual emissions of the unit.

(iv) For any emissions unit which has not begun normal operations on the particular date, actual emissions shall equal the potential to emit of the unit on that date.

14. *Construction* means any physical change or change in the method of operation (including fabrication, erection, installation, demolition, or modification of an emissions unit) which would result in a change in actual emissions.

15. *Commence* as applied to construction of a major stationary source or major modification means that the owner or operator has all necessary preconstruction approvals or permits and either has:

(i) Begun, or caused to begin, a continuous program of actual on-site construction of the source, to be completed within a reasonable time; or

(ii) Entered into binding agreements or contractual obligations, which cannot be cancelled or modified without substantial loss to the owner or operator, to undertake a program of actual construction of the source to be completed within a reasonable time.

16. *Necessary preconstruction approvals or permits* means those permits or approvals required under Federal air quality control laws and regulations and those air quality control laws and regulations which are part of the applicable State Implementation Plan.

17. *Begin actual construction* means, in general, initiation of physical on-site construction activities on an emissions unit which are of a permanent nature. Such activities include, but are not limited to, installation of building supports and foundations, laying of underground pipework, and construction of permanent storage structures. With respect to a change in method of operating this term refers to those on-site activities other than preparatory activities which mark the initiation of the change.

18. *Lowest achievable emission rate* means, for any source, the more stringent rate of emissions based on the following:

(i) The most stringent emissions limitation which is contained in the implementation plan of any State for such class or category of stationary source, unless the owner or operator of the proposed stationary source demonstrates that such limitations are not achievable; or

(ii) The most stringent emissions limitation which is achieved in practice by such class or category of stationary source. This limitation, when applied to a modification, means the lowest achievable emissions rate for the new or modified emissions units within the stationary source. In no event shall the application of this term permit a proposed new or modified stationary source to emit any pollutant in excess of the amount allowable under applicable new source standards of performance.

19. *Resource recovery facility* means any facility at which solid waste is processed for the purpose of extracting, converting to energy, or otherwise separating and preparing solid waste for reuse. Energy conversion facilities must utilize solid waste to provide more than 50 percent of the heat input to be considered a resource recovery facility under this Ruling.

20. *Volatile organic compounds (VOC)* is as defined in §51.100(s) of this part.

B. *Review of all sources for emission limitation compliance.* The reviewing authority must examine each proposed major new source and proposed major modification[1] to determine if such a source will meet all applicable emission requirements in the SIP, any applicable new source performance standard in 40 CFR part 60, or any national emission standard for hazardous air pollutants in 40 CFR part 61. If the reviewing authority determines that the proposed major new source cannot meet the applicable emission requirements, the permit to construct must be denied.

C. *Review of specified sources for air quality impact.* In addition, the reviewing authority must determine whether the major stationary source or major modification would be constructed in an area designated in 40 CFR 81.300 *et seq.* as nonattainment for a pollutant for which the stationary source or modification is major.

D.–E. [Reserved]

F. *Fugitive emissions sources.* Section IV. A. of this Ruling shall not apply to a source or modification that would be a major stationary source or major modification only if fugitive emissions, to the extent quantifiable, are considered in calculating the potential to emit of the stationary source or modification and the source does not belong to any of the following categories:

(1) Coal cleaning plants (with thermal dryers);

(2) Kraft pulp mills;

(3) Portland cement plants;

(4) Primary zinc smelters;

(5) Iron and steel mills;

(6) Primary aluminum ore reduction plants;

(7) Primary copper smelters;

(8) Municipal incinerators capable of charging more than 250 tons of refuse per day;

(9) Hydrofluoric, sulfuric, or nitric acid plants;

(10) Petroleum refineries;

(11) Lime plants;

(12) Phosphate rock processing plants;

(13) Coke oven batteries;

(14) Sulfur recovery plants;

(15) Carbon black plants (furnace process);

(16) Primary lead smelters;

(17) Fuel conversion plants;

(18) Sintering plants;

(19) Secondary metal production plants;

(20) Chemical process plants;

[1] Hereafter the term *source* will be used to denote both any source and any modification.

(21) Fossil-fuel boilers (or combination thereof) totaling more than 250 million British thermal units per hour heat input;

(22) Petroleum storage and transfer units with a total storage capacity exceeding 300,000 barrels;

(23) Taconite ore processing plants;

(24) Glass fiber processing plants;

(25) Charcoal production plants;

(26) Fossil fuel-fired steam electric plants of more than 250 million British thermal units per hour heat input;

(27) Any other stationary source category which, as of August 7, 1980, is being regulated under section 111 or 112 of the Act.

G. *Secondary emissions.* Secondary emissions need not be considered in determining whether the emission rates in Section II.C. above would be exceeded. However, if a source is subject to this Ruling on the basis of the direct emissions from the source, the applicable conditions of this Ruling must also be met for secondary emissions. However, secondary emissions may be exempt from Conditions 1 and 2 of Section IV. Also, since EPA's authority to perform or require indirect source review relating to mobile sources regulated under Title II of the Act (motor vehicles and aircraft) has been restricted by statute, consideration of the indirect impacts of motor vehicles and aircraft traffic is not required under this Ruling.

III. Sources Locating in Designated Clean or Unclassifiable Areas Which Would Cause or Contribute to a Violation of a National Ambient Air Quality Standard

A. This section applies only to major sources or major modifications which would locate in an area designated in 40 CFR 81.300 *et seq.* as attainment or unclassifiable in a State where EPA has not yet approved the State preconstruction review program required by 40 CFR 51.165(b), if the source or modification would exceed the following significance levels at any locality that does not meet the NAAQS:

Pollutant	Annual	Averaging time (hours)			
		24	8	3	1
SO_2	1.0 μg/m³	5 μg/m³		25 μg/m³	
TSP	1.0 μg/m³	5 μg/m³			
NO_2	1.0 μg/m³				
CO			0.5 mg/m³		2 mg/m³.

B. Sources to which this section applies must meet Conditions 1, 2, and 4 of Section IV.A. of this ruling.[2] However, such sources may be exempt from Condition 3 of Section IV.A. of this ruling.

C. *Review of specified sources for air quality impact.* For *stable* air pollutants (i.e. SO_2, particulate matter and CO), the determination of whether a source will cause or contribute to a violation of an NAAQS generally should be made on a case-by-case basis as of the proposed new source's start-up date using the source's allowable emissions in an atmospheric simulation model (unless a source will clearly impact on a receptor which exceeds an NAAQS).

For sources of nitrogen oxides, the initial determination of whether a source would cause or contribute to a violation of the NAAQS for NO_2 should be made using an atmospheric simulation model assuming all the nitric oxide emitted is oxidized to NO_2 by the time the plume reaches ground level. The initial concentration estimates may be adjusted if adequate data are available to account for the expected oxidation rate.

For ozone, sources of volatile organic compounds, locating outside a designated ozone nonattainment area, will be presumed to have no significant impact on the designated nonattainment area. If ambient monitoring indicates that the area of source location is in fact nonattainment, then the source may be permitted under the provisions of any State plan adopted pursuant to section 110(a)(2)(D) of the Act until the area is designated nonattainment and a State Implementation Plan revision is approved. If no State plan pursuant to section 110(a)(2)(D) has been adopted and approved, then this Ruling shall apply.

As noted above, the determination as to whether a source would cause or contribute to a violation of an NAAQS should be made as of the new source's start-up date. Therefore, if a designated nonattainment area is projected to be an attainment area as part of an approved SIP control strategy by the new source start-up date, offsets would not be required if the new source would not cause a new violation.

D. *Sources locating in clean areas,* but would cause a new violating of an NAAQS. If the reviewing authority finds that the emissions from a proposed source would cause a new violation of an NAAQS, but would not contribute to an existing violation, approval may be granted only if both of the following conditions are met:

[2] The discussion in this paragraph is a proposal, but represents EPA's interim policy until final rulemaking is completed.

Condition 1. The new source is required to meet a more stringent emission limitation[3] and/or the control of existing sources below allowable levels is required so that the source will not cause a violation of any NAAQS.

Condition 2. The new emission limitations for the new source as well as any existing sources affected must be enforceable in accordance with the mechanisms set forth in Section V of this appendix.

IV. SOURCES THAT WOULD LOCATE IN A DESIGNATED NONATTAINMENT AREA

A. *Conditions for approval.* If the reviewing authority finds that the major stationary source or major modification would be constructed in an area designated in 40 CFR 81.300 *et seq* as nonattainment for a pollutant for which the stationary source or modification is major, approval may be granted only if the following conditions are met:

Condition 1. The new source is required to meet an emission Limitation[4] which specifies the lowest achievable emission rate for such source.[5]

Condition 2. The applicant must certify that all existing major sources owned or operated by the applicant (or any entity controlling, controlled by, or under common control with the appplicant) in the same State as the proposed source are in compliance with all applicable emission limitations and standards under the Act (or are in compliance with an expeditious schedule which is Federally enforceable or contained in a court decree).

Condition 3. Emission reductions (*offsets*) from existing sources[6] in the area of the proposed source (whether or not under the same ownership) are required such that there will be reasonable progress toward attainment of the applicable NAAQs.[7]

Only intrapollutant emission offsets will be acceptable (e.g., hydrocarbon increases may not be offset against SO_2 reductions).

Condition 4. The emission offsets will provide a positive net air quality benefit in the affected area (see Section IV.D. below).[8] Atmospheric simulation modeling is not necessary for volatile organic compounds and NO_X. Fulfillment of Condition 3 and Section

[3] If the reviewing authority determines that technological or economic limitations on the application of measurement methodology to a particular class of sources would make the imposition of an enforceable numerical emission standard infeasible, the authority may instead prescribe a design, operational or equipment standard. In such cases, the reviewing authority shall make its best estimate as to the emission rate that will be achieved and must specify that rate in the required submission to EPA (see Part V). Any permits issued without an enforceable numerical emission standard must contain enforceable conditions which assure that the design characteristics or equipment will be properly maintained (or that the operational conditions will be properly performed) so as to continuously achieve the assumed degree of control. Such conditions shall be enforceable as emission limitations by private parties under section 304. Hereafter, the term *emission limitation* shall also include such design, operational, or equipment standards.

[4] If the reviewing authority determines that technological or economic limitations on the application of measurement methodology to a particular class of sources would make the imposition of an enforceable numerical emission standard infeasible, the authority may instead prescribe a design, operational or equipment standard. In such cases, the reviewing authority shall make its best estimate as to the emission rate that will be achieved and must specify that rate in the required submission to EPA (see Part V). Any permits issued without an enforceable numerical emission standard must contain enforceable conditions which assure that the design characteristics or equipment will be properly maintained (or that the operational conditions will be properly performed) so as to continuously achieve the assumed degree of control. Such conditions shall be enforceable as emission limitations by private parties under section 304. Hereafter, the term *emission limitation* shall also include such design, operational, or equipment standards.

[5] Required only for those pollutants for which the increased allowable emissions exceed 50 tons per year, 1000 pounds per day, or 100 pounds per hour, although the reviewing authority may address other pollutants if deemed appropriate. The preceding hourly and daily rates shall apply only with respect to a pollutant for which a national ambient air quality standard, for a period less than 24 hours or for a 24-hour period, as appropriate, has been established.

[6] Subject to the provisions of section IV.C. below.

[7] The discussion in this paragraph is a proposal, but represents EPA's interim policy until final rulemaking is completed.

[8] Required only for those pollutants for which the increased allowable emissions exceed 50 tons per year, 1000 pounds per day, or 100 pounds per hour, although the reviewing authority may address other pollutants if deemed appropriate. The preceding hourly and daily rates shall apply only with respect to a pollutant for which a national ambient air quality standard, for a period less than 24 hours or for a 24-hour period, as appropriate, has been established.

IV.D. will be considered adequate to meet this condition.

B. *Exemptions from certain conditions.* The reviewing authority may exempt the following sources from Condition 1 under Section III or Conditions 3 and 4. Section IV.A.:

(i) Resource recovery facilities burning municipal solid waste, and (ii) sources which must switch fuels due to lack of adequate fuel supplies or where a source is required to be modified as a result of EPA regulations (e.g., lead-in-fuel requirements) and no exemption from such regulation is available to the source. Such an exemption may be granted only if:

1. The applicant demonstrates that it made its best efforts to obtain sufficient emission offsets to comply with Condition 1 under Section III or Conditions 3 and 4 under Section IV.A. and that such efforts were unsuccessful;

2. The applicant has secured all available emission offsets; and

3. The applicant will continue to seek the necessary emission offsets and apply them when they become available.

Such an exemption may result in the need to revise the SIP to provide additional control of existing sources.

Temporary emission sources, such as pilot plants, portable facilities which will be relocated outside of the nonattainment area after a short period of time, and emissions resulting from the construction phase of a new source, are exempt from Conditions 3 and 4 of this section.

C. *Baseline for determining credit for emission and air quality offsets.* The baseline for determining credit for emission and air quality offsets will be the SIP emission limitations in effect at the time the application to construct or modify a source is filed. Thus, credit for emission offset purposes may be allowable for existing control that goes beyond that required by the SIP. Emission offsets generally should be made on a pounds per hour basis when all facilities involved in the emission offset calculations are operating at their maximum expected or allowed production rate. The reviewing agency should specify other averaging periods (e.g., tons per year) in addition to the pounds per hour basis if necessary to carry out the intent of this Ruling. When offsets are calculated on a tons per year basis, the baseline emissions for existing sources providing the offsets should be calculated using the actual annual operating hours for the previous one or two year period (or other appropriate period if warranted by cyclical business conditions). Where the SIP requires certain hardware controls in lieu of an emission limitation (e.g., floating roof tanks for petroleum storage), baseline allowable emissions should be based on actual operating conditions for the previous one or two year period (i.e., actual throughput and vapor pressures) in conjunction with the required hardware controls.

1. *No meaningful or applicable SIP requirement.* Where the applicable SIP does not contain an emission limitation for a source or source category, the emission offset baseline involving such sources shall be the actual emissions determined in accordance with the discussion above regarding operating conditions.

Where the SIP emission limit allows greater emissions than the uncontrolled emission rate of the source (as when a State has a single particulate emission limit for all fuels), emission offset credit will be allowed only for control below the uncontrolled emission rate.

2. *Combustion of fuels.* Generally, the emissions for determining emission offset credit involving an existing fuel combustion source will be the allowable emissions under the SIP for the type of fuel being burned at the time the new source application is filed (i.e., if the existing source has switched to a different type of fuel at some earlier date, any resulting emission reduction [either actual or allowable] shall not be used for emission offset credit). If the existing source commits to switch to a cleaner fuel at some future date, emission offset credit based on the allowable emissions for the fuels involved is not acceptable unless the permit is conditioned to require the use of a specified alternative control measure which would achieve the same degree of emission reduction should the source switch back to a dirtier fuel at some later date. The reviewing authority should ensure that adequate long-term supplies of the new fuel are available before granting emission offset credit for fuel switches.

3. (i) *Operating hours and source shutdown.*

A source may generally be credited with emissions reductions achieved by shutting down an existing source or permanently curtailing production or operating hours below baseline levels (see initial discussion in this Section IV.C), if such reductions are permanent, quantifiable, and federally enforceable, and if the area has an EPA-approved attainment plan. In addition, the shutdown or curtailment is creditable only if it occurred on or after the date specified for this purpose in the plan, and if such date is on or after the date of the most recent emissions inventory used in the plan's demonstration of attainment. Where the plan does not specify a cutoff date for shutdown credits, the date of the most recent emissions inventory or attainment demonstration, as the case may be, shall apply. However, in no event may credit be given for shutdowns which occurred prior to August 7, 1977. For purposes of this paragraph, a permitting authority may choose to consider a prior shutdown or curtailment to have occurred after the date of its most recent emissions inventory, if the inventory

explicitly includes as current ''existing'' emissions the emissions from such previously shutdown or curtailed sources.

(ii) Such reductions may be credited in the absence of an approved attainment demonstration only if the shutdown or curtailment occurred on or after the date the new source application is filed, or, if the applicant can establish that the proposed new source is a replacement for the shutdown or curtailed source and the cutoff date provisions of section IV.C.3.(i) are observed.

4. *Credit for VOC substitution.* As set forth in the Agency's ''Recommended Policy on Control of Volatile Organic Compounds'' (42 FR 35314, July 8, 1977), EPA has found that almost all non-methane VOCs are photochemically reactive and that low reactivity VOCs eventually form as much ozone as the highly reactive VOCs. Therefore, no emission offset credit may be allowed for replacing one VOC compound with another of lesser reactivity, except for those compounds listed in Table 1 of the above policy statement.

5. *''Banking'' of emission offset credit.* For new sources obtaining permits by applying offsets after January 16, 1979, the reviewing authority may allow offsets that exceed the requirements of reasonable progress toward attainment (Condition 3) to be ''banked'' (i.e., saved to provide offsets for a source seeking a permit in the future) for use under this Ruling. Likewise, the reviewing authority may allow the owner of an existing source that reduces its own emissions to bank any resulting reductions beyond those required by the SIP for use under this Ruling, even if none of the offsets are applied immediately to a new source permit. A reviewing authority may allow these banked offsets to be used under the preconstruction review program required by Part D, as long as these banked emissions are identified and accounted for in the SIP control strategy. A reviewing authority may not approve the construction of a source using banked offsets if the new source would interfere with the SIP control strategy or if such use would violate any other condition set forth for use of offsets. To preserve banked offsets, the reviewing authority should identify them in either a SIP revision or a permit, and establish rules as to how and when they may be used.

6. *Offset credit for meeting NSPS or NESHAPS.* Where a source is subject to an emission limitation established in a New Source Performance Standard (NSPS) or a National Emission Standard for Hazardous Air Pollutants (NESHAPS), (*i.e.,* requirements under sections 111 and 112, respectively, of the Act), and a different SIP limitation, the more stringent limitation shall be used as the baseline for determining credit for emission and air quality offsets. The difference in emissions between the SIP and the NSPS or NESHAPS, for such source may not be used as offset credit. However, if a source were not subject to an NSPS or NESHAPS, for example if its construction had commenced prior to the proposal of an NSPS or NESHAPS for that source category, offset credit can be permitted for tightening the SIP to the NSPS or NESHAPS level for such source.

D. *Location of offsetting emissions.* In the case of emission offsets involving volatile organic compounds (VOC), the offsets may be obtained from sources located anywhere in the broad vicinity of the proposed new source. Generally, offsets will be acceptable if obtained from within the same AQCR as the new source or from other areas which may be contributing to the ozone problem at the proposed new source location. As with other pollutants, it is desirable to obtain offsets from sources located as close to the proposed new source site as possible. If the proposed offsets would be from sources located at greater distances from the new source, the reviewing authority should increase the ratio of the required offsets and require a showing that nearby offsets were investigated and reasonable alternatives were not available.[9]

Offsets for NO_X sources may also be obtained within the broad vicinity of the proposed new source. This is because areawide ozone and NO_2 levels are generally not as dependent on specific VOC or NO_X source location as they are on overall area emissions. Since the air quality impact of SO_2, particulate and carbon monoxide sources is site dependent, simple areawide mass emission offsets are not appropriate. For these pollutants, the reviewing authority should consider atmospheric simulation modeling to ensure that the emission offsets provide a positive net air quality benefit. However, to avoid unnecessary consumption of limited, costly and time consuming modeling resources, in most cases it can be assumed that if the emission offsets are obtained from an existing source on the same premises or in the immediate vicinity of the new source, and the pollutants disperse from substantially the same effective stack height, the air quality test under Condition 4 of Section IV.A. of this appendix will be met. Thus, when stack emissions are offset against a ground level source at the same site, modeling would be required. The reviewing authority may perform this analysis or require the applicant to submit appropriate modeling results.

E. *Reasonable progress towards attainment.* As long as the emission offset is greater than one-for-one, and the other criteria set forth

[9] The discussion in this paragraph is a proposal, but represents EPA's interim policy until final rulemaking is completed.

above are met, EPA does not intend to question a reviewing authority's judgment as to what constitutes reasonable progress towards attainment as required under Condition 3 in Section IV.A. of this appendix. This does not apply to ''reasonable further progress'' as required by Section 173.

F. *Source obligation.* At such time that a particular source or modification becomes a major stationary source or major modification solely by virtue of a relaxation in any enforceable limitation which was established after August 7, 1980, on the capacity of the source or modification otherwise to emit a pollutant, such as a restriction on hours of operation, then the requirements of this Ruling shall apply to the source or modification as though construction had not yet commenced on the source or modification.

V. ADMINISTRATIVE PROCEDURES

The necessary emission offsets may be proposed either by the owner of the proposed source or by the local community or the State. The emission reduction committed to must be enforceable by authorized State and/or local agencies and under the Clean Air Act, and must be accomplished by the new source's start-up date. If emission reductions are to be obtained in a State that neighbors the State in which the new source is to be located, the emission reductions committed to must be enforceable by the neighboring State and/or local agencies and under the Clean Air Act. Where the new facility is a replacement for a facility that is being shut down in order to provide the necessary offsets, the reviewing authority may allow up to 180 days for shakedown of the new facility before the existing facility is required to cease operation.

A. *Source initiated emission offsets.* A source may propose emission offsets which involve: (1) Reductions from sources controlled by the source owner (internal emission offsets); and/or (2) reductions from neighboring sources (external emission offsets). The source does not have to investigate all possible emission offsets. As long as the emission offsets obtained represent reasonable progress toward attainment, they will be acceptable. It is the reviewing authority's responsibility to assure that the emission offsets will be as effective as proposed by the source. An internal emission offset will be considered enforceable if it is made a SIP requirement by inclusion as a condition of the new source permit and the permit is forwarded to the appropriate EPA Regional Office.[10] An external emission offset will not be enforceable unless the affected source(s) providing the emission reductions is subject to a new SIP requirement to ensure that its emissions will be reduced by a specified amount in a specified time. Thus, if the source(s) providing the emission reductions does not obtain the necessary reduction, it will be in violation of a SIP requirement and subject to enforcement action by EPA, the State and/or private parties.

The form of the SIP revision may be a State or local regulation, operating permit condition, consent or enforcement order, or any other mechanism available to the State that is enforceable under the Clean Air Act. If a SIP revision is required, the public hearing on the revision may be substituted for the normal public comment procedure required for all major sources under 40 CFR 51.18. The formal publication of the SIP revision approval in the FEDERAL REGISTER need not appear before the source may proceed with construction. To minimize uncertainty that may be caused by these procedures, EPA will, if requested by the State, propose a SIP revision for public comment in the FEDERAL REGISTER concurrently with the State public hearing process. Of course, any major change in the final permit/SIP revision submitted by the State may require a reproposal by EPA.

B. *State or community initiated emission offsets.* A State or community which desires that a source locate in its area may commit to reducing emissions from existing sources (including mobile sources) to sufficiently outweigh the impact of the new source and thus open the way for the new source. As with source-initiated emission offsets, the commitment must be something more than one-for-one. This commitment must be submitted as a SIP revision by the State.

VI. POLICY WHERE ATTAINMENT DATES HAVE NOT PASSED

In some cases, the dates for attainment of primary standards specified in the SIP under section 110 have not yet passed due to a delay in the promulgation of a plan under this section of the Act. In addition the Act provides more flexibility with respect to the dates for attainment of secondary NAAQS than for primary standards. Rather than setting specific deadlines, section 110 requires secondary NAAQS to be achieved within a ''reasonable time''. Therefore, in some cases, the date for attainment of secondary standards specified in the SIP under section 110 may also not yet have passed. In such cases, a new source locating in an area designated in 40 CFR 81.3000 *et seq.* as nonattainment (or, where Section III of this Ruling is applicable, a new source which would cause or contribute to an NAAQS violation) may be exempt from the Conditions of Section IV. A.

[10] The emission offset will, therefore, be enforceable by EPA under section 113 as an applicable SIP requirement and will be enforceable by private parties under section 304 as an emission limitation.

so long as the new source meets the applicable SIP emissions limitations and will not interfere with the attainment date specified in the SIP under section 110 of the Act.

(Secs. 101(b)(1), 110, 160–169, 171–178, and 301(a), Clean Air Act, as amended (42 U.S.C. 7401(b)(1), 7410, 7470–7479, 7501–7508, and 7601(a)); sec. 129(a), Clean Air Act Amendments of 1977 (Pub. L. 95–95, 91 Stat. 685 (Aug., 7, 1977)))

[44 FR 3282, Jan. 16, 1979, as amended at 45 FR 31311, May 13, 1980; 45 FR 52741, Aug. 7, 1980; 45 FR 59879, Sept. 11, 1980; 46 FR 50771, Oct. 14, 1981; 47 FR 27561, June 25, 1982; 49 FR 43210, Oct. 26, 1984; 51 FR 40661, 40675, Nov. 7, 1986; 52 FR 24714, July 1, 1987; 52 FR 29386, Aug 7, 1987; 54 FR 27285, 27299, June 28, 1989; 57 FR 3946, Feb. 3, 1992]

APPENDIXES T–U [RESERVED]

APPENDIX V TO PART 51—CRITERIA FOR DETERMINING THE COMPLETENESS OF PLAN SUBMISSIONS

1.0. PURPOSE

This appendix V sets forth the minimum criteria for determining whether a State implementation plan submitted for consideration by EPA is an official submission for purposes of review under §51.103.

1.1 The EPA shall return to the submitting official any plan or revision thereof which fails to meet the criteria set forth in this appendix V, and request corrective action, identifying the component(s) absent or insufficient to perform a review of the submitted plan.

1.2 The EPA shall inform the submitting official whether or not a plan submission meets the requirements of this appendix V within 60 days of EPA's receipt of the submittal, but no later than 6 months after the date by which the State was required to submit the plan or revision. If a completeness determination is not made by 6 months from receipt of a submittal, the submittal shall be deemed complete by operation of law on the date 6 months from receipt. A determination of completeness under this paragraph means that the submission is an official submission for purposes of §51.103.

2.0. CRITERIA

The following shall be included in plan submissions for review by EPA:

2.1. Administrative Materials

(a) A formal letter of submittal from the Governor or his designee, requesting EPA approval of the plan or revision thereof (hereafter ''the plan'').

(b) Evidence that the State has adopted the plan in the State code or body of regulations; or issued the permit, order, consent agreement (hereafter ''document'') in final form. That evidence shall include the date of adoption or final issuance as well as the effective date of the plan, if different from the adoption/issuance date.

(c) Evidence that the State has the necessary legal authority under State law to adopt and implement the plan.

(d) A copy of the actual regulation, or document submitted for approval and incorporation by reference into the plan, including indication of the changes made to the existing approved plan, where applicable. The submittal shall be a copy of the official State regulation /document signed, stamped, dated by the appropriate State official indicating that it is fully enforceable by the State. The effective date of the regulation/document shall, whenever possible, be indicated in the document itself.

(e) Evidence that the State followed all of the procedural requirements of the State's laws and constitution in conducting and completing the adoption/issuance of the plan.

(f) Evidence that public notice was given of the proposed change consistent with procedures approved by EPA, including the date of publication of such notice.

(g) Certification that public hearings(s) were held in accordance with the information provided in the public notice and the State's laws and constitution, if applicable.

(h) Compilation of public comments and the State's response thereto.

2.2. Technical Support

(a) Identification of all regulated pollutants affected by the plan.

(b) Identification of the locations of affected sources including the EPA attainment/nonattainment designation of the locations and the status of the attainment plan for the affected areas(s).

(c) Quantification of the changes in plan allowable emissions from the affected sources; estimates of changes in current actual emissions from affected sources or, where appropriate, quantification of changes in actual emissions from affected sources through calculations of the differences between certain baseline levels and allowable emissions anticipated as a result of the revision.

(d) The State's demonstration that the national ambient air quality standards, prevention of significant deterioration increments, reasonable further progress demonstration, and visibility, as applicable, are protected if the plan is approved and implemented. For all requests to redesignate an area to attainment for a national primary ambient air quality standard, under section 107 of the Act, a revision must be submitted to provide for the maintenance of the national primary ambient air quality standards for at least 10 years as required by section 175A of the Act.

(e) Modeling information required to support the proposed revision, including input

data, output data, models used, justification of model selections, ambient monitoring data used, meteorological data used, justification for use of offsite data (where used), modes of models used, assumptions, and other information relevant to the determination of adequacy of the modeling analysis.

(f) Evidence, where necessary, that emission limitations are based on continuous emission reduction technology.

(g) Evidence that the plan contains emission limitations, work practice standards and recordkeeping/reporting requirements, where necessary, to ensure emission levels.

(h) Compliance/enforcement strategies, including how compliance will be determined in practice.

(i) Special economic and technological justifications required by any applicable EPA policies, or an explanation of why such justifications are not necessary.

2.3. Exceptions

2.3.1. The EPA, for the purposes of expediting the review of the plan, has adopted a procedure referred to as ''parallel processing.'' Parallel processing allows a State to submit the plan prior to actual adoption by the State and provides an opportunity for the State to consider EPA comments prior to submission of a final plan for final review and action. Under these circumstances, the plan submitted will not be able to meet all of the requirements of paragraph 2.1 (all requirements of paragraph 2.2 will apply). As a result, the following exceptions apply to plans submitted explicitly for parallel processing:

(a) The letter required by paragraph 2.1(a) shall request that EPA propose approval of the proposed plan by parallel processing.

(b) In lieu of paragraph 2.1(b) the State shall submit a schedule for final adoption or issuance of the plan.

(c) In lieu of paragraph 2.1(d) the plan shall include a copy of the proposed/draft regulation or document, including indication of the proposed changes to be made to the existing approved plan, where applicable.

(d) The requirements of paragraphs 2.1(e)–2.1(h) shall not apply to plans submitted for parallel processing.

2.3.2. The exceptions granted in paragraph 2.3.1 shall apply only to EPA's determination of proposed action and all requirements of paragraph 2.1 shall be met prior to publication of EPA's final determination of plan approvability.

[55 FR 5830, Feb. 16, 1990, as amended at 56 FR 42219, Aug. 26, 1991; 56 FR 57288, Nov. 8, 1991]

APPENDIX W TO PART 51—GUIDELINE ON AIR QUALITY MODELS

PREFACE

a. Industry and control agencies have long expressed a need for consistency in the application of air quality models for regulatory purposes. In the 1977 Clean Air Act, Congress mandated such consistency and encouraged the standardization of model applications. The Guideline on Air Quality Models (hereafter, Guideline) was first published in April 1978 to satisfy these requirements by specifying models and providing guidance for their use. The Guideline provides a common basis for estimating the air quality concentrations used in assessing control strategies and developing emission limits.

b. The continuing development of new air quality models in response to regulatory requirements and the expanded requirements for models to cover even more complex problems have emphasized the need for periodic review and update of guidance on these techniques. Four primary on-going activities provide direct input to revisions of the Guideline. The first is a series of annual EPA workshops conducted for the purpose of ensuring consistency and providing clarification in the application of models. The second activity, directed toward the improvement of modeling procedures, is the cooperative agreement that EPA has with the scientific community represented by the American Meteorological Society. This agreement provides scientific assessment of procedures and proposed techniques and sponsors workshops on key technical issues. The third activity is the solicitation and review of new models from the technical and user community. In the March 27, 1980 FEDERAL REGISTER, a procedure was outlined for the submittal to EPA of privately developed models. After extensive evaluation and scientific review, these models, as well as those made available by EPA, are considered for recognition in the Guideline. The fourth activity is the extensive on-going research efforts by EPA and others in air quality and meteorological modeling.

c. Based primarily on these four activities, this document embodies all revisions to the Guideline Although the text has been revised from the original 1978 guide, the present content and topics are similar. As necessary, new sections and topics are included. EPA does not make changes to the guidance on a predetermined schedule, but rather on an as needed basis. EPA believes that revisions of the Guideline should be timely and responsive to user needs and should involve public participation to the greatest possible extent. All future changes to the guidance will be

proposed and finalized in the FEDERAL REGISTER. Information on the current status of modeling guidance can always be obtained from EPA's Regional Offices.

TABLE OF CONTENTS

List of Tables

1.0 Introduction
2.0 Overview of Model Use
2.1 Suitability of Models
2.2 Classes of Models
2.3 Levels of Sophistication of Models
3.0 Recommended Air Quality Models
3.1 Preferred Modeling Techniques
3.1.1 Discussion
3.1.2 Recommendations
3.2 Use of Alternative Models
3.2.1 Discussion
3.2.2 Recommendations
3.3 Availability of Supplementary Modeling Guidance
3.3.1 The Model Clearinghouse
3.3.2 Regional Meteorologists Workshops
4.0 Simple-Terrain Stationary Source Models
4.1 Discussion
4.2 Recommendations
4.2.1 Screening Techniques
4.2.2 Refined Analytical Techniques
5.0 Model Use in Complex Terrain
5.1 Discussion
5.2 Recommendations
5.2.1 Screening Techniques
5.2.2 Refined Analytical Techniques
6.0 Models for Ozone, Carbon Monoxide and Nitrogen Dioxide
6.1 Discussion
6.2 Recommendations
6.2.1 Models for Ozone
6.2.2 Models for Carbon Monoxide
6.2.3 Models for Nitrogen Dioxide (Annual Average)
7.0 Other Model Requirements
7.1 Discussion
7.2 Recommendations
7.2.1 Fugitive Dust/Fugitive Emissions
7.2.2 Particulate Matter
7.2.3 Lead
7.2.4 Visibility
7.2.5 Good Engineering Practice Stack Height
7.2.6 Long Range Transport (LRT) (i.e., beyond 50km)
7.2.7 Modeling Guidance for Other Governmental Programs
7.2.8 Air Pathway Analyses (Air Toxics and Hazardous Waste)
8.0 General Modeling Considerations
8.1 Discussion
8.2 Recommendations
8.2.1 Design Concentrations
8.2.2 Critical Receptor Sites
8.2.3 Dispersion Coefficients
8.2.4 Stability Categories
8.2.5 Plume Rise
8.2.6 Chemical Transformation
8.2.7 Gravitational Settling and Deposition
8.2.8 Urban/Rural Classification
8.2.9 Fumigation
8.2.10 Stagnation
8.2.11 Calibration of Models
9.0 Model Input Data
9.1 Source Data
9.1.1 Discussion
9.1.2 Recommendations
9.2 Background Concentrations
9.2.1 Discussion
9.2.2 Recommendations (Isolated Single Source)
9.2.3 Recommendations (Multi-Source Areas)
9.3 Meteorological Input Data
9.3.1 Length of Record of Meteorological Data
9.3.2 National Weather Service Data
9.3.3 Site-Specific Data
9.3.4 Treatment of Calms
10.0 Accuracy and Uncertainty of Models
10.1 Discussion
10.1.1 Overview of Model Uncertainty
10.1.2 Studies of Model Accuracy
10.1.3 Use of Uncertainty in Decision-Making
10.1.4 Evaluation of Models
10.2 Recommendations
11.0 Regulatory Application of Models
11.1 Discussion
11.2 Recommendations
11.2.1 Analysis Requirements
11.2.2 Use of Measured Data in Lieu of Model Estimates
11.2.3 Emission Limits
12.0 References
13.0 Bibliography
14.0 Glossary of Terms
APPENDIX A TO APPENDIX W OF PART 51—SUMMARIES OF PREFERRED AIR QUALITY MODELS
APPENDIX B TO APPENDIX W OF PART 51—SUMMARIES OF ALTERNATIVE AIR QUALITY MODELS
APPENDIX C TO APPENDIX W OF PART 51—EXAMPLE AIR QUALITY ANALYSIS CHECKLIST

LIST OF TABLES

Table No.	Title
5–1a	Neutral/Stable Meteorological Matrix for CTSCREEN.
5–1b	Unstable/Convective Meteorological Matrix for CTSCREEN.
5–2	Preferred Options for the SHORTZ/LONGZ Computer Codes When Used in a Screening Mode.
5–3	Preferred Options for the RTDM Computer Code When Used in a Screening Mode.
9–1	Model Emission Input Data for Point Sources.
9–2	Point Source Model Input Data (Emissions) for PSD NAAQS Compliance Demonstrations.
9–3	Averaging Times for Site-Specific Wind and Turbulence Measurements.

1.0 INTRODUCTION

a. The Guideline recommends air quality modeling techniques that should be applied

to State Implementation Plan (SIP)[1] revisions for existing sources and to new source reviews,[2] including prevention of significant deterioration (PSD).[3] It is intended for use by EPA Regional Offices in judging the adequacy of modeling analyses performed by EPA, State and local agencies and by industry. The guidance is appropriate for use by other Federal agencies and by State agencies with air quality and land management responsibilities. The Guideline serves to identify, for all interested parties, those techniques and data bases EPA considers acceptable. The guide is not intended to be a compendium of modeling techniques. Rather, it should serve as a basis by which air quality managers, supported by sound scientific judgment, have a common measure of acceptable technical analysis.

b. Due to limitations in the spatial and temporal coverage of air quality measurements, monitoring data normally are not sufficient as the sole basis for demonstrating the adequacy of emission limits for existing sources. Also, the impacts of new sources that do not yet exist can only be determined through modeling. Thus, models, while uniquely filling one program need, have become a primary analytical tool in most air quality assessments. Air quality measurements though can be used in a complementary manner to dispersion models, with due regard for the strengths and weaknesses of both analysis techniques. Measurements are particularly useful in assessing the accuracy of model estimates. The use of air quality measurements alone however could be preferable, as detailed in a later section of this document, when models are found to be unacceptable and monitoring data with sufficient spatial and temporal coverage are available.

c. It would be advantageous to categorize the various regulatory programs and to apply a designated model to each proposed source needing analysis under a given program. However, the diversity of the nation's topography and climate, and variations in source configurations and operating characteristics dictate against a strict modeling ''cookbook.'' There is no one model capable of properly addressing all conceivable situations even within a broad category such as point sources. Meteorological phenomena associated with threats to air quality standards are rarely amenable to a single mathematical treatment; thus, case-by-case analysis and judgment are frequently required. As modeling efforts become more complex, it is increasingly important that they be directed by highly competent individuals with a broad range of experience and knowledge in air quality meteorology. Further, they should be coordinated closely with specialists in emissions characteristics, air monitoring and data processing. The judgment of experienced meteorologists and analysts is essential.

d. The model that most accurately estimates concentrations in the area of interest is always sought. However, it is clear from the needs expressed by the States and EPA Regional Offices, by many industries and trade associations, and also by the deliberations of Congress, that consistency in the selection and application of models and data bases should also be sought, even in case-by-case analyses. Consistency ensures that air quality control agencies and the general public have a common basis for estimating pollutant concentrations, assessing control strategies and specifying emission limits. Such consistency is not, however, promoted at the expense of model and data base accuracy. This guide provides a consistent basis for selection of the most accurate models and data bases for use in air quality assessments.

e. Recommendations are made in this guide concerning air quality models, data bases, requirements for concentration estimates, the use of measured data in lieu of model estimates, and model evaluation procedures. Models are identified for some specific applications. The guidance provided here should be followed in all air quality analyses relative to State Implementation Plans and in analyses required by EPA, State and local agency air programs. The EPA may approve the use of another technique that can be demonstrated to be more appropriate than those recommended in this guide. This is discussed at greater length in section 3.0. In all cases, the model applied to a given situation should be the one that provides the most accurate representation of atmospheric transport, dispersion, and chemical transformations in the area of interest. However, to ensure consistency, deviations from this guide should be carefully documented and fully supported.

f. From time to time situations arise requiring clarification of the intent of the guidance on a specific topic. Periodic workshops are held with the EPA Regional Meteorologists to ensure consistency in modeling guidance and to promote the use of more accurate air quality models and data bases. The workshops serve to provide further explanations of Guideline requirements to the Regional Offices and workshop reports are issued with this clarifying information. In addition, findings from on-going research programs, new model submittals, or results from model evaluations and applications are continuously evaluated. Based on this information changes in the guidance may be indicated.

g. All changes to the Guideline must follow rulemaking requirements since the Guideline is codified in this appendix W of part 51. EPA will promulgate proposed and final rules in the FEDERAL REGISTER to amend this

appendix W. Ample opportunity for public comment will be provided for each proposed change and public hearings scheduled if requested.

h. A wide range of topics on modeling and data bases are discussed in the Guideline. Chapter 2 gives an overview of models and their appropriate use. Chapter 3 provides specific guidance on the use of ''preferred'' air quality models and on the selection of alternative techniques. Chapters 4 through 7 provide recommendations on modeling techniques for application to simple-terrain stationary source problems, complex terrain problems, and mobile source problems. Specific modeling requirements for selected regulatory issues are also addressed. Chapter 8 discusses issues common to many modeling analyses, including acceptable model components. Chapter 9 makes recommendations for data inputs to models including source, meteorological and background air quality data. Chapter 10 covers the uncertainty in model estimates and how that information can be useful to the regulatory decision-maker. The last chapter summarizes how estimates and measurements of air quality are used in assessing source impact and in evaluating control strategies.

i. This appendix W itself contains three appendices: A, B, and C. Thus, when reference is made to ''Appendix A'', it refers to appendix A to this appendix W. Appendices B and C are referenced in the same way.

j. Appendix A contains summaries of refined air quality models that are ''preferred'' for specific applications; both EPA models and models developed by others are included. Appendix B contains summaries of other refined models that may be considered with a case-specific justification. Appendix C contains a checklist of requirements for an air quality analysis.

2.0 Overview of Model Use

a. Before attempting to implement the guidance contained in this appendix, the reader should be aware of certain general information concerning air quality models and their use. Such information is provided in this section.

2.1 Suitability of Models

a. The extent to which a specific air quality model is suitable for the evaluation of source impact depends upon several factors. These include: (1) The meteorological and topographic complexities of the area; (2) the level of detail and accuracy needed for the analysis; (3) the technical competence of those undertaking such simulation modeling; (4) the resources available; and (5) the detail and accuracy of the data base, i.e., emissions inventory, meteorological data, and air quality data. Appropriate data should be available before any attempt is made to apply a model. A model that requires detailed, precise, input data should not be used when such data are unavailable. However, assuming the data are adequate, the greater the detail with which a model considers the spatial and temporal variations in emissions and meteorological conditions, the greater the ability to evaluate the source impact and to distinguish the effects of various control strategies.

b. Air quality models have been applied with the most accuracy or the least degree of uncertainty to simulations of long term averages in areas with relatively simple topography. Areas subject to major topographic influences experience meteorological complexities that are extremely difficult to simulate. Although models are available for such circumstances, they are frequently site specific and resource intensive. In the absence of a model capable of simulating such complexities, only a preliminary approximation may be feasible until such time as better models and data bases become available.

c. Models are highly specialized tools. Competent and experienced personnel are an essential prerequisite to the successful application of simulation models. The need for specialists is critical when the more sophisticated models are used or the area being investigated has complicated meteorological or topographic features. A model applied improperly, or with inappropriately chosen data, can lead to serious misjudgments regarding the source impact or the effectiveness of a control strategy.

d. The resource demands generated by use of air quality models vary widely depending on the specific application. The resources required depend on the nature of the model and its complexity, the detail of the data base, the difficulty of the application, and the amount and level of expertise required. The costs of manpower and computational facilities may also be important factors in the selection and use of a model for a specific analysis. However, it should be recognized that under some sets of physical circumstances and accuracy requirements, no present model may be appropriate. Thus, consideration of these factors should not lead to selection of an inappropriate model.

2.2 Classes of Models

a. The air quality modeling procedures discussed in this guide can be categorized into four generic classes: Gaussian, numerical, statistical or empirical, and physical. Within these classes, especially Gaussian and numerical models, a large number of individual ''computational algorithms'' may exist, each with its own specific applications. While each of the algorithms may have the same generic basis, e.g., Gaussian, it is accepted practice to refer to them individually as models. For example, the Industrial Source Complex (ISC) model and the RAM model are

commonly referred to as individual models. In fact, they are both variations of a basic Gaussian model. In many cases the only real difference between models within the different classes is the degree of detail considered in the input or output data.

b. Gaussian models are the most widely used techniques for estimating the impact of nonreactive pollutants. Numerical models may be more appropriate than Gaussian models for area source urban applications that involve reactive pollutants, but they require much more extensive input data bases and resources and therefore are not as widely applied. Statistical or empirical techniques are frequently employed in situations where incomplete scientific understanding of the physical and chemical processes or lack of the required data bases make the use of a Gaussian or numerical model impractical. Various specific models in these three generic types are discussed in the Guideline.

c. Physical modeling, the fourth generic type, involves the use of wind tunnel or other fluid modeling facilities. This class of modeling is a complex process requiring a high level of technical expertise, as well as access to the necessary facilities. Nevertheless, physical modeling may be useful for complex flow situations, such as building, terrain or stack downwash conditions, plume impact on elevated terrain, diffusion in an urban environment, or diffusion in complex terrain. It is particularly applicable to such situations for a source or group of sources in a geographic area limited to a few square kilometers. If physical modeling is available and its applicability demonstrated, it may be the best technique. A discussion of physical modeling is beyond the scope of this guide. The EPA publication ''Guideline for Fluid Modeling of Atmospheric Diffusion,''[4] provides information on fluid modeling applications and the limitations of that method.

2.3 Levels of Sophistication of Models

a. In addition to the various classes of models, there are two levels of sophistication. The first level consists of general, relatively simple estimation techniques that provide conservative estimates of the air quality impact of a specific source, or source category. These are screening techniques or screening models. The purpose of such techniques is to eliminate the need of further more detailed modeling for those sources that clearly will not cause or contribute to ambient concentrations in excess of either the National Ambient Air Quality Standards (NAAQS)[5] or the allowable prevention of significant deterioration (PSD) concentration increments.[3] If a screening technique indicates that the concentration contributed by the source exceeds the PSD increment or the increment remaining to just meet the NAAQS, then the second level of more sophisticated models should be applied.

b. The second level consists of those analytical techniques that provide more detailed treatment of physical and chemical atmospheric processes, require more detailed and precise input data, and provide more specialized concentration estimates. As a result they provide a more refined and, at least theoretically, a more accurate estimate of source impact and the effectiveness of control strategies. These are referred to as refined models.

c. The use of screening techniques followed by a more refined analysis is always desirable, however there are situations where the screening techniques are practically and technically the only viable option for estimating source impact. In such cases, an attempt should be made to acquire or improve the necessary data bases and to develop appropriate analytical techniques.

3.0 Recommended Air Quality Models

a. This section recommends refined modeling techniques that are preferred for use in regulatory air quality programs. The status of models developed by EPA, as well as those submitted to EPA for review and possible inclusion in this guidance, is discussed. The section also addresses the selection of models for individual cases and provides recommendations for situations where the preferred models are not applicable. Two additional sources of modeling guidance, the Model Clearinghouse[6] and periodic Regional Meteorologists' workshops, are also briefly discussed here.

b. In all regulatory analyses, especially if other than preferred models are selected for use, early discussions among Regional Office staff, State and local control agencies, industry representatives, and where appropriate, the Federal Land Manager, are invaluable and are encouraged. Agreement on the data base to be used, modeling techniques to be applied and the overall technical approach, prior to the actual analyses, helps avoid misunderstandings concerning the final results and may reduce the later need for additional analyses. The use of an air quality checklist, such as presented in appendix C, and the preparation of a written protocol help to keep misunderstandings at a minimum.

c. It should not be construed that the preferred models identified here are to be permanently used to the exclusion of all others or that they are the only models available for relating emissions to air quality. The model that most accurately estimates concentrations in the area of interest is always sought. However, designation of specific models is needed to promote consistency in model selection and application.

d. The 1980 solicitation of new or different models from the technical community[7] and

the program whereby these models are evaluated, established a means by which new models are identified, reviewed and made available in the Guideline. There is a pressing need for the development of models for a wide range of regulatory applications. Refined models that more realistically simulate the physical and chemical process in the atmosphere and that more reliably estimate pollutant concentrations are required. Thus, the solicitation of models is considered to be continuous.

3.1 Preferred Modeling Techniques

3.1.1 Discussion

a. EPA has developed approximately 10 models suitable for regulatory application. More than 20 additional models were submitted by private developers for possible inclusion in the Guideline. These refined models have all been organized into eight categories of use: rural, urban industrial complex, reactive pollutants, mobile sources, complex terrain, visibility, and long range transport. They are undergoing an intensive evaluation by category. The evaluation exercises[8 9 10] include statistical measures of model performance in comparison with measured air quality data as suggested by the American Meteorological Society[11] and, where possible, peer scientific reviews.[12 13 14]

b. When a single model is found to perform better than others in a given category, it is recommended for application in that category as a preferred model and listed in appendix A. If no one model is found to clearly perform better through the evaluation exercise, then the preferred model listed in appendix A is selected on the basis of other factors such as past use, public familiarity, cost or resource requirements, and availability. No further evaluation of a preferred model is required if the source follows EPA recommendations specified for the model in the Guideline. The models not specifically recommended for use in a particular category are summarized in appendix B. These models should be compared with measured air quality data when they are used for regulatory applications consistent with recommendations in section 3.2.

c. The solicitation of new refined models which are based on sounder scientific principles and which more reliably estimate pollutant concentrations is considered by EPA to be continuous. Models that are submitted in accordance with the provisions outlined in the FEDERAL REGISTER notice of March 1980 (45 FR 20157)[7] will be evaluated as submitted. These requirements are:

i. The model must be computerized and functioning in a common Fortran language suitable for use on a variety of computer systems.

ii. The model must be documented in a user's guide which identifies the mathematics of the model, data requirements and program operating characteristics at a level of detail comparable to that available for currently recommended models, e.g., the Industrial Source Complex (ISC) model.

iii. The model must be accompanied by a complete test data set including input parameters and output results. The test data must be included in the user's guide as well as provided in computer-readable form.

iv. The model must be useful to typical users, e.g., State air pollution control agencies, for specific air quality control problems. Such users should be able to operate the computer program(s) from available documentation.

v. The model documentation must include a comparison with air quality data or with other well-established analytical techniques.

vi. The developer must be willing to make the model available to users at reasonable cost or make it available for public access through the National Technical Information Service; the model cannot be proprietary.

d. The evaluation process will include a determination of technical merit, in accordance with the above six items including the practicality of the model for use in ongoing regulatory programs. Each model will also be subjected to a performance evaluation for an appropriate data base and to a peer scientific review. Models for wide use (not just an isolated case!) found to perform better, based on an evaluation for the same data bases used to evaluate models in appendix A, will be proposed for inclusion as preferred models in future Guideline revisions.

3.1.2 Recommendations

a. Appendix A identifies refined models that are preferred for use in regulatory applications. If a model is required for a particular application, the user should select a model from appendix A. These models may be used without a formal demonstration of applicability as long as they are used as indicated in each model summary of appendix A. Further recommendations for the application of these models to specific source problems are found in subsequent sections of the Guideline.

b. If changes are made to a preferred model without affecting the concentration estimates, the preferred status of the model is unchanged. Examples of modifications that do not affect concentrations are those made to enable use of a different computer or those that affect only the format or averaging time of the model results. However, when any changes are made, the Regional Administrator should require a test case example to demonstrate that the concentration estimates are not affected.

c. A preferred model should be operated with the options listed in appendix A as ''Recommendations for Regulatory Use.'' If other options are exercised, the model is no

longer ''preferred.'' Any other modification to a preferred model that would result in a change in the concentration estimates likewise alters its status as a preferred model. Use of the model must then be justified on a case-by-case basis.

3.2 Use of Alternative Models

3.2.1 Discussion

a. Selection of the best techniques for each individual air quality analysis is always encouraged, but the selection should be done in a consistent manner. A simple listing of models in this guide cannot alone achieve that consistency nor can it necessarily provide the best model for all possible situations. An EPA document, ''Interim Procedures for Evaluating Air Quality Models'',[15 16] has been prepared to assist in developing a consistent approach when justifying the use of other than the preferred modeling techniques recommended in this guide. An alternative to be considered to the performance measures contained in Chapter 3 of this document is set forth in another EPA document ''Protocol for Determining the Best Performing Model''.[17] The procedures in both documents provide a general framework for objective decision-making on the acceptability of an alternative model for a given regulatory application. The documents contain procedures for conducting both the technical evaluation of the model and the field test or performance evaluation.

b. This section discusses the use of alternate modeling techniques and defines three situations when alternative models may be used.

3.2.2 Recommendations

a. Determination of acceptability of a model is a Regional Office responsibility. Where the Regional Administrator finds that an alternative model is more appropriate than a preferred model, that model may be used subject to the recommendations below. This finding will normally result from a determination that (1) A preferred air quality model is not appropriate for the particular application; or (2) a more appropriate model or analytical procedure is available and is applicable.

b. An alternative model should be evaluated from both a theoretical and a performance perspective before it is selected for use. There are three separate conditions under which such a model will normally be approved for use: (1) If a demonstration can be made that the model produces concentration estimates equivalent to the estimates obtained using a preferred model; (2) if a statistical performance evaluation has been conducted using measured air quality data and the results of that evaluation indicate the alternative model performs better for the application than a comparable model in appendix A; and (3) if there is no preferred model for the specific application but a refined model is needed to satisfy regulatory requirements. Any one of these three separate conditions may warrant use of an alternative model. Some known alternative models that are applicable for selected situations are contained in appendix B. However, inclusion there does not infer any unique status relative to other alternative models that are being or will be developed in the future.

c. Equivalency is established by demonstrating that the maximum or highest, second highest concentrations are within 2 percent of the estimates obtained from the preferred model. The option to show equivalency is intended as a simple demonstration of acceptability for an alternative model that is so nearly identical (or contains options that can make it identical) to a preferred model that it can be treated for practical purposes as the preferred model. Two percent was selected as the basis for equivalency since it is a rough approximation of the fraction that PSD Class I increments are of the NAAQS for SO_2, i.e., the difference in concentrations that is judged to be significant. However, notwithstanding this demonstration, use of models that are not equivalent may be used when the conditions of paragraph e of this section are satisfied.

d. The procedures and techniques for determining the acceptability of a model for an individual case based on superior performance is contained in the document entitled ''Interim Procedures for Evaluating Air Quality Models'',[15] and should be followed, as appropriate.[a] Preparation and implementation of an evaluation protocol which is acceptable to both control agencies and regulated industry is an important element in such an evaluation.

e. When no appendix A model is applicable to the modeling problem, an alternative refined model may be used provided that:

i. The model can be demonstrated to be applicable to the problem on a theoretical basis; and

ii. The data bases which are necessary to perform the analysis are available and adequate; and

iii. Performance evaluations of the model in similar circumstances have shown that the model is not biased toward underestimates; or

[a] Another EPA document, ''Protocol for Determining the Best Performing Model'',[17] contains advanced statistical techniques for determining which model performs better than other competing models. In many cases, this protocol should be considered by users of the ''Interim Procedures for Evaluating Air Quality Models'' in preference to the material currently in Chapter 3 of that document.

iv. After consultation with the EPA Regional Office, a second model is selected as a baseline or reference point for performance and the interim procedures[15] protocol[17] are then used to demonstrate that the proposed model performs better than the reference model.

3.3 Availability of Supplementary Modeling Guidance

a. The Regional Administrator has the authority to select models that are appropriate for use in a given situation. However, there is a need for assistance and guidance in the selection process so that fairness and consistency in modeling decisions is fostered among the various Regional Offices and the States. To satisfy that need, EPA established the Model Clearinghouse and also holds periodic workshops with headquarters, Regional Office and State modeling representatives.

3.3.1 The Model Clearinghouse

3.3.1.1 Discussion

a. The Model Clearinghouse is the single EPA focal point for review of air quality simulation models proposed for use in specific regulatory applications. Details concerning the Clearinghouse and its operation are found in the document, ''Model Clearinghouse: Operational Plan.''[6] Three primary functions of the Clearinghouse are:

i. Review of decisions proposed by EPA Regional Offices on the use of modeling techniques and data bases.

ii. Periodic visits to Regional Offices to gather information pertinent to regulatory model usage.

iii. Preparation of an annual report summarizing activities of the Clearinghouse including specific determinations made during the course of the year.

3.3.1.2 Recommendations

a. The Regional Administrator may request assistance from the Model Clearinghouse after an initial evaluation and decision has been reached concerning the application of a model, analytical technique or data base in a particular regulatory action. The Clearinghouse may also consider and evaluate the use of modeling techniques submitted in support of any regulatory action. Additional responsibilities are: (1) Review proposed action for consistency with agency policy; (2) determine technical adequacy; and (3) make recommendations concerning the technique or data base.

3.3.2 Regional Meteorologists Workshops

3.3.2.1 Discussion

a. EPA conducts an annual in-house workshop for the purpose of mutual discussion and problem resolution among Regional Office modeling specialists, EPA research modeling experts, EPA Headquarters modeling and regulatory staff and representatives from State modeling programs. A summary of the issues resolved at previous workshops was issued in 1981 as ''Regional Workshops on Air Quality Modeling: A Summary Report.''[17] That report clarified procedures not specifically defined in the 1978 version of the Guideline and was issued to ensure the consistent interpretation of model requirements from Region to Region. Similar workshops for the purpose of clarifying Guideline procedures or providing detailed instructions for the use of those procedures are anticipated in the future.

3.3.2.2 Recommendations

a. The Regional Office should always be consulted for information and guidance concerning modeling methods and interpretations of modeling guidance, and to ensure that the air quality model user has available the latest most up-to-date policy and procedures.

4.0 SIMPLE-TERRAIN STATIONARY SOURCE MODELS

4.1 Discussion

a. Simple terrain, as used in this section, is considered to be an area where terrain features are all lower in elevation than the top of the stack of the source(s) in question. The models recommended in this section are generally used in the air quality impact analysis of stationary sources for most criteria pollutants. The averaging time of the concentration estimates produced by these models ranges from 1 hour to an annual average.

b. Model evaluation exercises have been conducted to determine the ''best, most appropriate point source model'' for use in simple terrain.[8 12] However, no one model has been found to be clearly superior. Based on past use, public familiarity, and availability, ISC is the recommended model for a wide range of regulatory applications. Similar determinations were made for the other refined models that are identified in section 4.2.

4.2 Recommendations

4.2.1 Screening Techniques

a. Point source screening techniques are an acceptable approach to air quality analyses. One such approach is contained in the EPA document ''Screening Procedures for Estimating the Air Quality Impact of Stationary Sources''.[18] A computerized version of the screening technique, SCREEN, is available.[19 20] For the current version of SCREEN, see 12.0 References.[20]

b. All screening procedures should be adjusted to the site and problem at hand. Close attention should be paid to whether the area

should be classified urban or rural in accordance with section 8.2.8. The climatology of the area should be studied to help define the worst-case meteorological conditions. Agreement should be reached between the model user and the reviewing authority on the choice of the screening model for each analysis, and on the input data as well as the ultimate use of the results.

4.2.2 Refined Analytical Techniques

a. A brief description of preferred models for refined applications is found in appendix A. Also listed in appendix A are the model input requirements, the standard options that should be selected when running the program, and output options.

b. When modeling for compliance with short term NAAQS and PSD increments is of primary concern, a short term model may also be used to provide long term concentration estimates. However, when modeling sources for which long term standards alone are applicable (e.g., lead), then the long term models should be used. The conversion from long term to short term concentration averages by any transformation technique is not acceptable in regulatory applications.

5.0 MODEL USE IN COMPLEX TERRAIN

5.1 Discussion

a. For the purpose of the Guideline, complex terrain is defined as terrain exceeding the height of the stack being modeled. Complex terrain dispersion models are normally applied to stationary sources of pollutants such as SO_2 and particulates.

b. A major outcome from the EPA Complex Terrain Model Development project has been the publication of a refined dispersion model (CTDM) suitable for regulatory application to plume impaction assessments in complex terrain.[21] Although CTDM as originally produced was only applicable to those hours characterized as neutral or stable, a computer code for all stability conditions, CTDMPLUS,[19] together with a user's guide,[22] and on-site meteorological and terrain data processors,[23 24] is now available. Moreover, CTSCREEN,[19 25] a version of CTDMPLUS that does not require on-site meteorological data inputs, is also available as a screening technique.

c. The methods discussed in this section should be considered in two categories: (1) Screening techniques, and (2) the refined dispersion model, CTDMPLUS, discussed below and listed in appendix A.

d. Continued improvements in ability to accurately model plume dispersion in complex terrain situations can be expected, e.g., from research on lee side effects due to terrain obstacles. New approaches to improve the ability of models to realistically simulate atmospheric physics, e.g., hybrid models which incorporate an accurate wind field analysis, will ultimately provide more appropriate tools for analyses. Such hybrid modeling techniques are also acceptable for regulatory applications after the appropriate demonstration and evaluation.[15]

5.2 Recommendations

a. Recommendations in this section apply primarily to those situations where the impaction of plumes on terrain at elevations equal to or greater than the plume centerline during stable atmospheric conditions are determined to be the problem. If a violation of any NAAQS or the controlling increment is indicated by using any of the preferred screening techniques, then a refined complex terrain model may be used. Phenomena such as fumigation, wind direction shear, lee-side effects, building wake- or terrain-induced downwash, deposition, chemical transformation, variable plume trajectories, and long range transport are not addressed by the recommendations in this section.

b. Where site-specific data are used for either screening or refined complex terrain models, a data base of at least 1 full-year of meteorological data is preferred. If more data are available, they should be used. Meteorological data used in the analysis should be reviewed for both spatial and temporal representativeness.

c. Placement of receptors requires very careful attention when modeling in complex terrain. Often the highest concentrations are predicted to occur under very stable conditions, when the plume is near, or impinges on, the terrain. The plume under such conditions may be quite narrow in the vertical, so that even relatively small changes in a receptor's location may substantially affect the predicted concentration. Receptors within about a kilometer of the source may be even more sensitive to location. Thus, a dense array of receptors may be required in some cases. In order to avoid excessively large computer runs due to such a large array of receptors, it is often desirable to model the area twice. The first model run would use a moderate number of receptors carefully located over the area of interest. The second model run would use a more dense array of receptors in areas showing potential for high concentrations, as indicated by the results of the first model run.

d. When CTSCREEN or CTDMPLUS is used, digitized contour data must be first processed by the CTDM Terrain Processor[23] to provide hill shape parameters in a format suitable for direct input to CTDMPLUS. Then the user supplies receptors either through an interactive program that is part of the model or directly, by using a text editor; using both methods to select receptors will generally be necessary to assure that the maximum concentrations are estimated by either model. In cases where a terrain feature may ''appear to the plume'' as smaller,

multiple hills, it may be necessary to model the terrain both as a single feature and as multiple hills to determine design concentrations.

e. The user is encouraged to confer with the Regional Office if any unresolvable problems are encountered with any screening or refined analytical procedures, e.g., meteorological data, receptor siting, or terrain contour processing issues.

5.2.1 Screening Techniques

a. Five preferred screening techniques are currently available to aid in the evaluation of concentrations due to plume impaction during stable conditions: (1) for 24-hour impacts, the Valley Screening Technique[19] as outlined in the Valley Model User's Guide;[26] (2) CTSCREEN,[19] as outlined in the CTSCREEN User's Guide;[25] (3) COMPLEX I;[19] (4) SHORTZ/LONGZ;[19 27] and (5) Rough Terrain Dispersion Model (RTDM)[19 90] in its prescribed mode described below. As appropriate, any of these screening techniques may be used consistent with the needs, resources, and available data of the user.

b. The Valley Model, COMPLEX I, SHORTZ/LONGZ, and RTDM should be used only to estimate concentrations at receptors whose elevations are greater than or equal to plume height. For receptors at or below stack height, a simple terrain model should be used (see Chapter 4). Receptors between stack height and plume height present a unique problem since none of the above models were designed to handle receptors in this narrow regime, the definition of which will vary hourly as meteorological conditions vary. CTSCREEN may be used to estimate concentrations under all stability conditions at all receptors located ''on terrain'' above stack top, but has limited applicability in multi-source situations. As a result, the estimation of concentrations at receptors between stack height and plume height should be considered on a case-by-case basis after consultation with the EPA Regional Office; the most appropriate technique may be a function of the actual source(s) and terrain configuration unique to that application. One technique that will generally be acceptable, but is not necessarily preferred for any specific application, involves applying both a complex terrain model (except for the Valley Model) and a simple terrain model. The Valley Model should not be used for any intermediate terrain receptor. For each receptor between stack height and plume height, an hour-by-hour comparison of the concentration estimates from both models is made. The higher of the two modeled concentrations should be chosen to represent the impact at that receptor for that hour, and then used to compute the concentration for the appropriate averaging time(s). For the simple terrain models, terrain may have to be ''chopped off'' at stack height, since these models are frequently limited to receptors no greater than stack height.

5.2.1.1 Valley Screening Technique

a. The Valley Screening Technique may be used to determine 24-hour averages. This technique uses the Valley Model with the following worst-case assumptions for rural areas: (1) P–G stability ''F''; (2) wind speed of 2.5 m/s; and (3) 6 hours of occurrence. For urban areas the stability should be changed to ''P–G stability E.''

b. When using the Valley Screening Technique to obtain 24-hour average concentrations the following apply: (1) multiple sources should be treated individually and the concentrations for each wind direction summed; (2) only one wind direction should be used (see User's Guide,[26] page 2–15) even if individual runs are made for each source; (3) for buoyant sources, the BID option may be used, and the option to use the 2.6 stable plume rise factor should be selected; (4) if plume impaction is likely on any elevated terrain closer to the source than the distance from the source to the final plume rise, then the transitional (or gradual) plume rise option for stable conditions should be selected.

c. The standard polar receptor grid found in the Valley Model User's Guide may not be sufficiently dense for all analyses if only one geographical scale factor is used. The user should choose an additional set of receptors at appropriate downwind distances whose elevations are equal to plume height minus 10 meters. Alternatively, the user may exercise the ''Valley equivalent'' option in COMPLEX I or SCREEN and note the comments above on the placement of receptors in complex terrain models.

d. When using the ''Valley equivalent'' option in COMPLEX I, set the wind profile exponents (PL) to 0.0, respectively, for all six stability classes.

5.2.1.2 CTSCREEN

a. CTSCREEN may be used to obtain conservative, yet realistic, worst-case estimates for receptors located on terrain above stack height. CTSCREEN accounts for the three-dimensional nature of plume and terrain interaction and requires detailed terrain data representative of the modeling domain. The model description and user's instructions are contained in the user's guide.[25] The terrain data must be digitized in the same manner as for CTDMPLUS and a terrain processor is available.[23] A discussion of the model's performance characteristics is provided in a technical paper.[91] CTSCREEN is designed to execute a fixed matrix of meteorological values for wind speed (u), standard deviation of horizontal and vertical wind

speeds (σ_v, σG5**w**), vertical potential temperature gradient ($d\theta/dz$), friction velocity (u_x), Monin-Obukhov length (L), mixing height (z_i) as a function of terrain height, and wind directions for both neutral/stable conditions and unstable convective conditions. Table 5–1 contains the matrix of meteorological variables that is used for each CTSCREEN analysis. There are 96 combinations, including exceptions, for each wind direction for the neutral/stable case, and 108 combinations for the unstable case. The specification of wind direction, however, is handled internally, based on the source and terrain geometry. The matrix was developed from examination of the range of meteorological variables associated with maximum monitored concentrations from the data bases used to evaluate the performance of CTDMPLUS. Although CTSCREEN is designed to address a single source scenario, there are a number of options that can be selected on a case-by-case basis to address multi-source situations. However, the Regional Office should be consulted, and concurrence obtained, on the protocol for modeling multiple sources with CTSCREEN to ensure that the worst case is identified and assessed. The maximum concentration output from CTSCREEN represents a worst-case 1-hour concentration. Time-scaling factors of 0.7 for 3-hour, 0.15 for 24-hour and 0.03 for annual concentration averages are applied internally by CTSCREEN to the highest 1-hour concentration calculated by the model.

5.2.1.3 COMPLEX I

a. If the area is rural, COMPLEX I may be used to estimate concentrations for all averaging times. COMPLEX I is a modification of the MPTER model that incorporates the plume impaction algorithm of the Valley Model.[19] It is a multiple-source screening technique that accepts hourly meteorological data as input. The output is the same as the normal MPTER output. When using COMPLEX I the following options should be selected: (1) Set terrain adjustment IOPT (1)=1; (2) set buoyancy induced dispersion IOPT (4)=1; (3) set IOPT (25)=1; (4) set the terrain adjustment values to 0.5, 0.5, 0.5 0.5, 0.0, 0.0, (respectively for six stability classes); and (5) set Z MIN=10.

b. When using the ''Valley equivalent'' option (only) in COMPLEX I, set the wind profile exponents (PL) to 0.0, respectively, for all six stability classes. For all other regulatory uses of COMPLEX I, set the wind profile exponents to the values used in the simple terrain models, i.e., 0.07, 0.07, 0.10, 0.15, 0.35, and 0.55, respectively, for rural modeling.

c. Gradual plume rise should be used to estimate concentrations at nearby elevated receptors, if plume impaction is likely on any elevated terrain closer to the source than the distance from the source to the final plume rise (see section 8.2.5).

5.2.1.4 SHORTZ/LONGZ

a. If the source is located in an urbanized (Section 8.2.8) complex terrain valley, then the suggested screening technique is SHORTZ for short-term averages or LONGZ for long-term averages. SHORTZ and LONGZ may be used as screening techniques in these complex terrain applications without demonstration and evaluation. Application of these models in other than urbanized valley situations will require the same evaluation and demonstration procedures as are required for all appendix B models.

b. Both SHORTZ and LONGZ have a number of options. When using these models as screening techniques for urbanized valley applications, the options listed in table 5–2 should be selected.

5.2.1.5 RTDM (Screening Mode)

a. RTDM with the options specified in table 5–3 may be used as a screening technique in rural complex terrain situations without demonstration and evaluation.

b. The RTDM screening technique can provide a more refined concentration estimate if on-site wind speed and direction characteristic of plume dilution and transport are used as input to the model. In complex terrain, these winds can seldom be estimated accurately from the standard surface (10m level) measurements. Therefore, in order to increase confidence in model estimates, EPA recommends that wind data input to RTDM should be based on fixed measurements at stack top height. For stacks greater than 100m, the measurement height may be limited to 100m in height relative to stack base. However, for very tall stacks, see guidance in section 9.3.3.2. This recommendation is broadened to include wind data representative of plume transport height where such data are derived from measurements taken with remote sensing devices such as SODAR. The data from both fixed and remote measurements should meet quality assurance and recovery rate requirements. The user should also be aware that RTDM in the screening mode accepts the input of measured wind speeds at only one height. The default values for the wind speed profile exponents shown in table 5–3 are used in the model to determine the wind speed at other heights. RTDM uses wind speed at stack top to calculate the plume rise and the critical dividing streamline height, and the wind speed at plume transport level to calculate dilution. RTDM treats wind direction as constant with height.

c. RTDM makes use of the ''critical dividing streamline'' concept and thus treats plume interactions with terrain quite differently from other models such as SHORTZ

and COMPLEX I. The plume height relative to the critical dividing streamline determines whether the plume impacts the terrain, or is lifted up and over the terrain. The receptor spacing to identify maximum impact concentrations is quite critical depending on the location of the plume in the vertical. Analysis of the expected plume height relative to the height of the critical dividing streamline should be performed for differing meteorological conditions in order to help develop an appropriate array of receptors. Then it is advisable to model the area twice according to the suggestions in section 5.2.

5.2.1.6 Restrictions

a. For screening analyses using the Valley Screening Technique, COMPLEX I or RTDM, a sector greater than 22½° should not be allowed. Full ground reflection should always be used in the Valley Screening Technique and COMPLEX I.

5.2.2 Refined Analytical Techniques

a. When the results of the screening analysis demonstrate a possible violation of NAAQS or the controlling PSD increments, a more refined analysis may need to be conducted.

b. The Complex Terrain Dispersion Model Plus Algorithms for Unstable Situations (CTDMPLUS) is a refined air quality model that is preferred for use in all stability conditions for complex terrain applications. CTDMPLUS is a sequential model that requires five input files: (1) General program specifications; (2) a terrain data file; (3) a receptor file; (4) a surface meteorological data file; and (5) a user created meteorological profile data file. Two optional input files consist of hourly emissions parameters and a file containing upper air data from rawinsonde data files, e.g., a National Climatic Data Center TD–6201 file, unless there are no hours categorized as unstable in the record. The model description and user instructions are contained in Volume 1 of the User's Guide.[22] Separate publications[23 24] describe the terrain preprocessor system and the meteorological preprocessor program. In Part I of a technical article[92] is a discussion of the model and its preprocessors; the model's performance characteristics are discussed in Part II of the same article.[93] The size of the CTDMPLUS executable file on a personal computer is approximately 360K bytes. The model produces hourly average concentrations of stable pollutants, i.e., chemical transformation or decay of species and settling/deposition are not simulated. To obtain concentration averages corresponding to the NAAQS, e.g., 3- or 24-hour, or annual averages, the user must execute a postprocessor program such as CHAVG.[19] CTDMPLUS is applicable to all receptors on terrain elevations above stack top. However, the model contains no algorithms for simulating building downwash or the mixing or recirculation found in cavity zones in the lee of a hill. The path taken by a plume through an array of hills cannot be simulated. CTDMPLUS does not explicitly simulate calm meteorological periods, and for those situations the user should follow the guidance in section 9.3.4. The user should follow the recommendations in the User's Guide under General Program Specifications for: (1) Selecting mixed layer heights, (2) setting minimum scalar wind speed to 1 m/s, and (3) scaling wind direction with height. Close coordination with the Regional Office is essential to insure a consistent, technically sound application of this model.

c. The performance of CTDMPLUS is greatly improved by the use of meteorological data from several levels up to plume height. However, due to the vast range of source-plume-hill geometries possible in complex terrain, detailed requirements for meteorological monitoring in support of refined analyses using CTDMPLUS should be determined on a case-by-case basis. The following general guidance should be considered in the development of a meteorological monitoring protocol for regulatory applications of CTDMPLUS and reviewed in detail by the Regional Office before initiating any monitoring. As appropriate, the On-Site Meteorological Program Guidance document[66] should be consulted for specific guidance on siting requirements for meteorological towers, selection and exposure of sensors, etc. As more experience is gained with the model in a variety of circumstances, more specific guidance may be developed.

d. Site specific meteorological data are critical to dispersion modeling in complex terrain and, consequently, the meteorological requirements are more demanding than for simple terrain. Generally, three different meteorological files (referred to as surface, profile, and rawin files) are needed to run CTDMPLUS in a regulatory mode.

e. The surface file is created by the meteorological preprocessor (METPRO)[24] based on on-site measurements or estimates of solar and/or net radiation, cloud cover and ceiling, and the mixed layer height. These data are used in METPRO to calculate the various surface layer scaling parameters (roughness length, friction velocity, and Monin-Obukhov length) which are needed to run the model. All of the user inputs required for the surface file are based either on surface observations or on measurements at or below 10m.

f. The profile data file is prepared by the user with on-site measurements (from at least three levels) of wind speed, wind direction, turbulence, and potential temperature. These measurements should be obtained up

to the representative plume height(s) of interest (i.e., the plume height(s) under those conditions important to the determination of the design concentration). The representative plume height(s) of interest should be determined using an appropriate complex terrain screening procedure (e.g., CTSCREEN) and should be documented in the monitoring/modeling protocol. The necessary meteorological measurements should be obtained from an appropriately sited meteorological tower augmented by SODAR if the representative plume height(s) of interest exceed 100m. The meteorological tower need not exceed the lesser of the representative plume height of interest (the highest plume height if there is more than one plume height of interest) or 100m.

g. Locating towers on nearby terrain to obtain stack height or plume height measurements for use in profiles by CTDMPLUS should be avoided unless it can clearly be demonstrated that such measurements would be representative of conditions affecting the plume.

h. The rawin file is created by a second meteorological preprocessor (READ62)[24] based on NWS (National Weather Service) upper air data. The rawin file is used in CTDMPLUS to calculate vertical potential temperature gradients for use in estimating plume penetration in unstable conditions. The representativeness of the off-site NWS upper air data should be evaluated on a case-by-case basis.

i. In the absence of an appropriate refined model, screening results may need to be used to determine air quality impact and/or emission limits.

TABLE 5–1A—NEUTRAL/STABLE METEOROLOGICAL MATRIX FOR CTSCREEN

Variable	Specific values				
U (m/s)	1.0	2.0	3.0	4.0	5.0
σ_v (m/s)	0.3	0.75			
σ_w (m/s)	0.08	0.15	0.30	0.75	
DQ/Dz (K/m)	0.01	0.02	0.035		
WD	(Wind direction optimized internally for each meteorological combination)				

Exceptions:
(1) If $U \leq 2$ m/s and $\sigma_v \geq 0.3$ m/s, then include $\sigma_w = 0.04$ m/s.
(2) If $\sigma_w = 0.75$ m/s and $U \geq 3.0$ m/s, then $^{DU}/_{D}z$ is limited to ≤ 0.01 K/m.
(3) If $U \geq 4$ m/s, then $\sigma_w \geq 0.15$ m/s.
(4) $\sigma_w \leq \sigma_v$

TABLE 5–1B—UNSTABLE/CONVECTIVE METEOROLOGICAL MATRIX FOR CTSCREEN

Variable	Specific values				
U (m/s)	1.0	2.0	3.0	4.0	5.0
u_x (m/s)	0.1	0.3	0.5		
L (m)	−10	−50	−90		
$^{DU}/_{D}z$(K/m)	0.030	(potential temperature gradient above z_i)			
z_i (m)	0.5h	1.0h	1.5h		
	(where h = terrain height)				

TABLE 5–2—PREFERRED OPTIONS FOR THE SHORTZ/LONGZ COMPUTER CODES WHEN USED IN A SCREENING MODE

Option		Selection
I Switch 9		If using NWS data, set = 0, If using site-specific data, check with the Regional Office.
I Switch 17		Set = 1 (urban option).
GAMMA 1		Use default values (0.6 entrainment coefficient).
GAMMA 2		Always default to ''stable''.
XRY		Set = 0 (50m rectilinear expansion distance).
NS, VS, FRQ (SHORTZ)		
NUS, VS, FRQ (LONGZ)	(particle size, etc.)	Do not use (applicable only in flat terrain).
ALPHA		Select 0.9.
SIGEPU		
SIGAPU	(dispersion parameters)	Use Cramer curves (default); if site-specific turbulence data are available, see Regional Office for advice.
P (wind profile)		Select default values given in table 2–2 of User's Instructions; if site-specific data are available, see Regional Office for advice.

TABLE 5–3—PREFERRED OPTIONS FOR THE RTDM COMPUTER CODE WHEN USED IN A SCREENING MODE

Parameter	Variable	Value	Remarks
PR001–003	SCALE		Scale factors assuming horizontal distance is in kilometers, vertical distance is in feet, and wind speed is in meters per second.
PR004	ZWIND1	Wind measurement height	See section 5.2.1.4.
	ZWIND2	Not used	Height of second anemometer.
	IDILUT	1	Dilution wind speed scaled to plume height.
	ZA	0 (default)	Anemometer-terrain height above stack base.
PR005	EXPON	0.09, 0.11, 0.12, 0.14, 0.2, 0.3 (default).	Wind profile exponents.
PR006	ICOEF	3 (default)	Briggs Rural/ASME[139] dispersion parameters.
PR009	IPPP	0 (default)	Partial plume penetration; not used.
PR010	IBUOY	1 (default)	Buoyancy-enhanced dispersion is used.
	ALPHA	3.162 (default)	Buoyancy-enhanced dispersion coefficient.
PR011	IDMX	1 (default)	Unlimited mixing height for stable conditions.
PR012	ITRANS	1 (default)	Transitional plume rise is used.
PR013	TERCOR	6*0.5 (default)	Plume patch correction factors.
PR014	RVPTG	0.02, 0.035 (default)	Vertical potential temperature gradient values for stabilities E and F.
PR015	ITIPD	1	Stack-tip downwash is used.
PR020	ISHEAR	0 (default)	Wind shear; not used.
PR022	IREFL	1 (default)	Partial surface reflection is used.
PR023	IHORIZ	2 (default)	Sector averaging.
	SECTOR	6*22.5 (default)	Using 22.5° sectors.
PR016 to 019; 021; and 024.	IY, IZ, IRVPTG, IHVPTG; IEPS; IEMIS.	0	Hourly values of turbulence, vertical potential temperature gradient, wind speed profile exponents, and stack emissions are not used.

6.0 MODELS FOR OZONE, CARBON MONOXIDE AND NITROGEN DIOXIDE

6.1 Discussion

a. Models discussed in this section are applicable to pollutants often associated with mobile sources, e.g., ozone (O_3), carbon monoxide (CO) and nitrogen dioxide (NO_2). Where stationary sources of CO and NO_2 are of concern, the reader is referred to sections 4 and 5

b. A control agency with jurisdiction over areas with significant ozone problems and which has sufficient resources and data to use a photochemical dispersion model is encouraged to do so. Experience with and evaluations of the Urban Airshed Model show it to be an acceptable, refined approach, and better data bases are becoming available that support the more sophisticated analytical procedures. However, empirical models (e.g., EKMA) fill the gap between more sophisticated photochemical dispersion models and proportional (rollback) modeling techniques and may be the only applicable procedure if the available data bases are insufficient for refined dispersion modeling.

c. Models for assessing the impact of carbon monoxide emissions are needed for a number of different purposes, e.g., to evaluate the effects of point sources, congested intersections and highways, as well as the cumulative effect on ambient CO concentrations of all sources of CO in an urban area.[94 95]

d. Nitrogen oxides are reactive and also an important contribution to the photochemical ozone problem. They are usually of most concern in areas of high ozone concentrations. Unless suitable photochemical dispersion models are used, assumptions regarding the conversion of NO to NO_2 are required when modeling. Site-specific conversion factors may be developed. If site-specific conversion factors are not available or photochemical models are not used, NO_2 modeling should be considered only a screening procedure.

6.2 Recommendations

6.2.1 Models for Ozone

a. The Urban Airshed Model (UAM)[19 28] is recommended for photochemical or reactive pollutant modeling applications involving entire urban areas. To ensure proper execution of this numerical model, users must satisfy the extensive input data requirements for the model as listed in appendix A and the users guide. Users are also referred to the ''Guideline for Regulatory Application of the Urban Airshed Model''[29] for additional data requirements and procedures for operating this model.

b. The empirical model, City-specific EKMA,[19 30–33] has limited applicability for

urban ozone analyses. Model users should consult the appropriate Regional Office on a case-by-case basis concerning acceptability of this modeling technique.

c. Appendix B contains some additional models that may be applied on a case-by-case basis for photochemical or reactive pollutant modeling. Other photochemical models, including multi-layered trajectory models, that are available may be used if shown to be appropriate. Most photochemical dispersion models require emission data on individual hydrocarbon species and may require three dimensional meteorological information on an hourly basis. Reasonably sophisticated computer facilities are also often required. Because the input data are not universally available and studies to collect such data are very resource intensive, there are only limited evaluations of those models.

d. For those cases which involve estimating the impact on ozone concentrations due to stationary sources of VOC and NO_X, whether for permitting or other regulatory cases, the model user should consult the appropriate Regional Office on the acceptability of the modeling technique.

e. Proportional (rollback/forward) modeling is not an acceptable procedure for evaluating ozone control strategies.

6.2.2 Models for Carbon Monoxide

a. For analyzing CO impacts at roadway intersections, users should follow the procedures in the ''Guideline for Modeling Carbon Monoxide from Roadway Intersections''.[34] The recommended model for such analyses is CAL3QHC.[35] This model combines CALINE3 (already in appendix A) with a traffic model to calculate delays and queues that occur at signalized intersections. In areas where the use of either TEXIN2 or CALINE4 has previously been established, its use may continue. The capability exists for these intersection models to be used in either a screening or refined mode. The screening approach is described in reference 34; a refined approach may be considered on a case-by-case basis. The latest version of the MOBILE (mobile source emission factor) model should be used for emissions input to intersection models.

b. For analyses of highways characterized by uninterrupted traffic flows, CALINE3 is recommended, with emissions input from the latest version of the MOBILE model.

c. The recommended model for urban areawide CO analyses is RAM or Urban Airshed Model (UAM); see appendix A. Information on SIP development and requirements for using these models can be found in references 34, 96, 97 and 98.

d. Where point sources of CO are of concern, they should be treated using the screening and refined techniques described in section 4 or 5 of the Guideline.

6.2.3 Models for Nitrogen Dioxide (Annual Average)

a. A tiered screening approach is recommended to obtain annual average estimates of NO_2 from point sources for New Source Review analysis, including PSD, and for SIP planning purposes. This multi-tiered approach is conceptually shown in Figure 6–1 and described in paragraphs b and c of this section. Figure 6–1 is as follows:

FIGURE 6–1—MULTI-TIERED SCREENING APPROACH FOR ESTIMATING ANNUAL NO_2 CONCENTRATIONS FROM POINT SOURCES

Tier 1: Assume Total Conversion of NO to NO_2

↓

Tier 2: Multiply Annual NO_X Estimate by Empirically Derived NO_2/NO_X Ratio.

b. For Tier 1 (the initial screen), use an appropriate Gaussian model from appendix A to estimate the maximum annual average concentration and assume a total conversion of NO to NO_2. If the concentration exceeds the NAAQS and/or PSD increments for NO_2, proceed to the 2nd level screen.

c. For Tier 2 (2nd level) screening analysis, multiply the Tier 1 estimate(s) by an empirically derived NO_2/NO_X value of 0.75 (annual national default).[36] An annual NO_2/NO_X ratio differing from 0.75 may be used if it can be shown that such a ratio is based on data likely to be representative of the location(s) where maximum annual impact from the individual source under review occurs. In the case where several sources contribute to consumption of a PSD increment, a locally derived annual NO_2/NO_X ratio should also be shown to be representative of the location where the maximum collective impact from the new plus existing sources occurs.

d. In urban areas, a proportional model may be used as a preliminary assessment to evaluate control strategies to meet the NAAQS for multiple minor sources, i.e. minor point, area and mobile sources of NO_X; concentrations resulting from major point sources should be estimated separately as discussed above, then added to the impact of the minor sources. An acceptable screening technique for urban complexes is to assume that all NO_X is emitted in the form of NO_2 and to use a model from appendix A for nonreactive pollutants to estimate NO_2 concentrations. A more accurate estimate can be obtained by: (1) Calculating the annual average concentrations of NO_X with an urban model, and (2) converting these estimates to NO_2 concentrations using an empirically derived annual NO_2/NO_X ratio. A value of 0.75 is recommended for this ratio. However, a spatially averaged annual NO_2/NO_X ratio may be determined from an existing air quality monitoring network and used in lieu of the

0.75 value if it is determined to be representative of prevailing ratios in the urban area by the reviewing agency. To ensure use of appropriate locally derived annual NO_2/NO_X ratios, monitoring data under consideration should be limited to those collected at monitors meeting siting criteria defined in 40 CFR part 58, appendix D as representative of ''neighborhood'', ''urban'', or ''regional'' scales. Furthermore, the highest annual spatially averaged NO_2/NO_X ratio from the most recent 3 years of complete data should be used to foster conservatism in estimated impacts.

e. To demonstrate compliance with NO_2 PSD increments in urban areas, emissions from major and minor sources should be included in the modeling analysis. Point and area source emissions should be modeled as discussed above. If mobile source emissions do not contribute to localized areas of high ambient NO_2 concentrations, they should be modeled as area sources. When modeled as area sources, mobile source emissions should be assumed uniform over the entire highway link and allocated to each area source grid square based on the portion of highway link within each grid square. If localized areas of high concentrations are likely, then mobile sources should be modeled as line sources with the preferred model ISCLT.

f. More refined techniques to handle special circumstances may be considered on a case-by-case basis and agreement with the reviewing authority should be obtained. Such techniques should consider individual quantities of NO and NO_2 emissions, atmospheric transport and dispersion, and atmospheric transformation of NO to NO_2. Where they are available, site-specific data on the conversion of NO to NO_2 may be used. Photochemical dispersion models, if used for other pollutants in the area, may also be applied to the NO_X problem.

7.0 Other Model Requirements

7.1 Discussion

a. This section covers those cases where specific techniques have been developed for special regulatory programs. Most of the programs have, or will have when fully developed, separate guidance documents that cover the program and a discussion of the tools that are needed. The following paragraphs reference those guidance documents, when they are available. No attempt has been made to provide a comprehensive discussion of each topic since the reference documents were designed to do that. This section will undergo periodic revision as new programs are added and new techniques are developed.

b. Other Federal agencies have also developed specific modeling approaches for their own regulatory or other requirements. An example of this is the three-volume manual issued by the U. S. Department of Housing and Urban Development, ''Air Quality Considerations in Residential Planning.''[37] Although such regulatory requirements and manuals may have come about because of EPA rules or standards, the implementation of such regulations and the use of the modeling techniques is under the jurisdiction of the agency issuing the manual or directive.

c. The need to estimate impacts at distances greater than 50km (the nominal distance to which EPA considers most Gaussian models applicable) is an important one especially when considering the effects from secondary pollutants. Unfortunately, models submitted to EPA have not as yet undergone sufficient field evaluation to be recommended for general use. Existing data bases from field studies at mesoscale and long range transport distances are limited in detail. This limitation is a result of the expense to perform the field studies required to verify and improve mesoscale and long range transport models. Particularly important and sparse are meteorological data adequate for generating three dimensional wind fields. Application of models to complicated terrain compounds the difficulty. EPA has completed limited evaluation of several long range transport (LRT) models against two sets of field data. The evaluation results are discussed in the document, ''Evaluation of Short-Term Long-Range Transport Models.''[99 100] For the time being, long range and mesoscale transport models must be evaluated for regulatory use on a case-by-case basis.

d. There are several regulatory programs for which air pathway analysis procedures and modeling techniques have been developed. For continuous emission releases, ISC forms the basis of many analytical techniques. EPA is continuing to evaluate the performance of a number of proprietary and public domain models for intermittent and non-stack emission releases. Until EPA completes its evaluation, it is premature to recommend specific models for air pathway analyses of intermittent and non-stack releases in the Guideline.

e. Regional scale models are used by EPA to develop and evaluate national policy and assist State and local control agencies. Two such models are the Regional Oxidant Model (ROM)[101 102 103] and the Regional Acid Deposition Model (RADM).[104] Due to the level of resources required to apply these models, it is not envisioned that regional scale models will be used directly in most model applications.

7.2 Recommendations

7.2.1 Fugitive Dust/Fugitive Emissions

a. Fugitive dust usually refers to the dust put into the atmosphere by the wind blowing over plowed fields, dirt roads or desert or

sandy areas with little or no vegetation. Reentrained dust is that which is put into the air by reason of vehicles driving over dirt roads (or dirty roads) and dusty areas. Such sources can be characterized as line, area or volume sources. Emission rates may be based on site-specific data or values from the general literature.

b. Fugitive emissions are usually defined as emissions that come from an industrial source complex. They include the emissions resulting from the industrial process that are not captured and vented through a stack but may be released from various locations within the complex. Where such fugitive emissions can be properly specified, the ISC model, with consideration of gravitational settling and dry deposition, is the recommended model. In some unique cases a model developed specifically for the situation may be needed.

c. Due to the difficult nature of characterizing and modeling fugitive dust and fugitive emissions, it is recommended that the proposed procedure be cleared by the appropriate Regional Office for each specific situation before the modeling exercise is begun.

7.2.2 Particulate Matter

a. The particulate matter NAAQS, promulgated on July 1, 1987 (52 FR 24634), includes only particles with an aerodynamic diameter less than or equal to a nominal 10 micrometers (PM–10). EPA promulgated regulations for PSD increments measured as PM–10 on June 3, 1993 (58 FR 31621), which are codified at §§51.166(c) and 52.21(c).

b. Screening techniques like those identified in section 4 are also applicable to PM–10 and to large particles. It is recommended that subjectively determined values for ''half-life'' or pollutant decay not be used as a surrogate for particle removal. Conservative assumptions which do not allow removal or transformation are suggested for screening. Proportional models (rollback/forward) may not be applied for screening analysis, unless such techniques are used in conjunction with receptor modeling.

c. Refined models such as those in section 4.0 are recommended for PM–10 and large particles. However, where possible, particle size, gas-to-particle formation, and their effect on ambient concentrations may be considered. For urban-wide refined analyses CDM 2.0 (long term) or RAM (short term) should be used. ISC is recommended for point sources of small particles and for source-specific analyses of complicated sources. No model recommended for general use at this time accounts for secondary particulate formation or other transformations in a manner suitable for SIP control strategy demonstrations. Where possible, the use of receptor models[38 39 105 106 107] in conjunction with dispersion models is encouraged to more precisely characterize the emissions inventory and to validate source specific impacts calculated by the dispersion model. A SIP development guideline,[108] model reconciliation guidance,[106] and an example model application[109] are available to assist in PM–10 analyses and control strategy development.

d. Under certain conditions, recommended dispersion models are not available or applicable. In such circumstances, the modeling approach should be approved by the appropriate Regional Office on a case-by-case basis. For example, where there is no recommended air quality model and area sources are a predominant component of PM–10, an attainment demonstration may be based on rollback of the apportionment derived from two reconciled receptor models, if the strategy provides a conservative demonstration of attainment. At this time, analyses involving model calculations for distances beyond 50km and under stagnation conditions should also be justified on a case-by-case basis (see sections 7.2.6 and 8.2.10).

e. As an aid to assessing the impact on ambient air quality of particulate matter generated from prescribed burning activities, reference 110 is available.

7.2.3 Lead

a. The air quality analyses required for lead implementation plans are given in §§51.83, 51.84 and 51.85. Sections 51.83 and 51.85 require the use of a modified rollback model as a minimum to demonstrate attainment of the lead air quality standard but the use of a dispersion model is the preferred approach. Section 51.83 requires the analysis of an entire urban area if the measured lead concentration in the urbanized area exceeds a quarterly (three month) average of 4.0 $\mu g/m^3$. Section 51.84 requires the use of a dispersion model to demonstrate attainment of the lead air quality standard around specified lead point sources. For other areas reporting a violation of the lead standard, §51.85 requires an analysis of the area in the vicinity of the monitor reporting the violation. The NAAQS for lead is a quarterly (three month) average, thus requiring the use of modeling techniques that can provide long-term concentration estimates.

b. The SIP should contain an air quality analysis to determine the maximum quarterly lead concentration resulting from major lead point sources, such as smelters, gasoline additive plants, etc. For these applications the ISC model is preferred, since the model can account for deposition of particles and the impact of fugitive emissions. If the source is located in complicated terrain or is subject to unusual climatic conditions, a case-specific review by the appropriate Regional Office may be required.

c. In modeling the effect of traditional line sources (such as a specific roadway or highway) on lead air quality, dispersion models

applied for other pollutants can be used. Dispersion models such as CALINE3 have been widely used for modeling carbon monoxide emissions from highways. However, where deposition is of concern, the line source treatment in ISC may be used. Also, where there is a point source in the middle of a substantial road network, the lead concentrations that result from the road network should be treated as background (see section 9.2); the point source and any nearby major roadways should be modeled separately using the ISC model.

d. To model an entire major urban area or to model areas without significant sources of lead emissions, as a minimum a proportional (rollback) model may be used for air quality analysis. The rollback philosophy assumes that measured pollutant concentrations are proportional to emissions. However, urban or other dispersion models are encouraged in these circumstances where the use of such models is feasible.

e. For further information concerning the use of models in the development of lead implementation plans, the documents ''Supplementary Guidelines for Lead Implementation Plans,''[40] and ''Updated Information on Approval and Promulgation of Lead Implementation Plans,''[41] should be consulted.

7.2.4. Visibility

a. The visibility regulations as promulgated in December 1980[b] require consideration of the effect of new sources on the visibility values of Federal Class I areas. The state of scientific knowledge concerning identifying, monitoring, modeling, and controlling visibility impairment is contained in an EPA report ''Protecting Visibility: An EPA Report to Congress''.[42] In 1985, EPA promulgated Federal Implementation Plans (FIPs) for States without approved visibility provisions in their SIPs. A monitoring plan was established as part of the FIPs.[c]

b. Guidance and a screening model, VISCREEN, is contained in the EPA document ''Workbook for Plume Visual Impact Screening and Analysis (Revised).''[43] VISCREEN can be used to calculate the potential impact of a plume of specified emissions for specific transport and dispersion conditions. If a more comprehensive analysis is required, any refined model should be selected in consultation with the EPA Regional Office and the appropriate Federal Land Manager who is responsible for determining whether there is an adverse effect by a plume on a Class I area.

c. PLUVUE II, listed in appendix B, may be applied on a case-by-case basis when refined plume visibility evaluations are needed. Plume visibility models have been evaluated against several data sets.[44, 45]

7.2.5 Good Engineering Practice Stack Height

a. The use of stack height credit in excess of Good Engineering Practice (GEP) stack height or credit resulting from any other dispersion technique is prohibited in the development of emission limitations by §§51.118 and 51.164. The definitions of GEP stack height and dispersion technique are contained in §51.100. Methods and procedures for making the appropriate stack height calculations, determining stack height credits and an example of applying those techniques are found in references 46, 47, 48, and 49.

b. If stacks for new or existing major sources are found to be less than the height defined by EPA's refined formula for determining GEP height,[d] then air quality impacts associated with cavity or wake effects due to the nearby building structures should be determined. Detailed downwash screening procedures[18] for both the cavity and wake regions should be followed. If more refined concentration estimates are required, the Industrial Source Complex (ISC) model contains algorithms for building wake calculations and should be used. Fluid modeling can provide a great deal of additional information for evaluating and describing the cavity and wake effects.

7.2.6 Long Range Transport (LRT) (i.e., beyond 50km)

a. Section 165(e) of the Clean Air Act requires that suspected significant impacts on PSD Class I areas be determined. However, 50km is the useful distance to which most Gaussian models are considered accurate for setting emission limits. Since in many cases PSD analyses may show that Class I areas may be threatened at distances greater than 50km from new sources, some procedure is needed to (1) determine if a significant impact will occur, and (2) identify the model to be used in setting an emission limit if the Class I increments are threatened (models for this purpose should be approved for use on a case-by-case basis as required in section 3.2). This procedure and the models selected for use should be determined in consultation with the EPA Regional Office and the appropriate Federal Land Manager (FLM). While the ultimate decision on whether a Class I area is adversely affected is the responsibility of the permitting authority, the FLM has an affirmative responsibility to protect air quality related values that may be affected.

[b] §51.300–307.

[c] §51.300–307.

[d] The EPA refined formula height is defined as H + 1.5L (see Reference 46).

b. If LRT is determined to be important, then estimates utilizing an appropriate refined model for receptors at distances greater than 50 km should be obtained. MESOPUFF II, listed in appendix B, may be applied on a case-by-case basis when LRT estimates are needed. Additional information on applying this model is contained in the EPA document ''A Modeling Protocol For Applying MESOPUFF II to Long Range Transport Problems''.[111]

7.2.7 Modeling Guidance for Other Governmental Programs

a. When using the models recommended or discussed in the Guideline in support of programmatic requirements not specifically covered by EPA regulations, the model user should consult the appropriate Federal or State agency to ensure the proper application and use of that model. For modeling associated with PSD permit applications that involve a Class I area, the appropriate Federal Land Manager should be consulted on all modeling questions.

b. The Offshore and Coastal Dispersion (OCD) model[112] was developed by the Minerals Management Service and is recommended for estimating air quality impact from offshore sources on onshore, flat terrain areas. The OCD model is not recommended for use in air quality impact assessments for onshore sources. Sources located on or just inland of a shoreline where fumigation is expected should be treated in accordance with section 8.2.9.

c. The Emissions and Dispersion Modeling System (EDMS)[113] was developed by the Federal Aviation Administration and the United States Air Force and is recommended for air quality assessment of primary pollutant impacts at airports or air bases. Regulatory application of EDMS is intended for estimating the cumulative effect of changes in aircraft operations, point source, and mobile source emissions on pollutant concentrations. It is not intended for PSD, SIP, or other regulatory air quality analyses of point or mobile sources at or peripheral to airport property that are independent of changes in aircraft operations. If changes in other than aircraft operations are associated with analyses, a model recommended in Chapter 4, 5, or 6 should be used.

7.2.8 Air Pathway Analyses (Air Toxics and Hazardous Waste)

a. Modeling is becoming an increasingly important tool for regulatory control agencies to assess the air quality impact of releases of toxics and hazardous waste materials. Appropriate screening techniques[114 115] for calculating ambient concentrations due to various well-defined neutrally buoyant toxic/hazardous pollutant releases are available.

b. Several regulatory programs within EPA have developed modeling techniques and guidance for conducting air pathway analyses as noted in references 116–129. ISC forms the basis of the modeling procedures for air pathway analyses of many of these regulatory programs and, where identified, is appropriate for obtaining refined ambient concentration estimates of neutrally buoyant continuous air toxic releases from traditional sources. Appendix A to the Guideline contains additional models appropriate for obtaining refined estimates of continuous air toxic releases from traditional sources. Appendix B contains models that may be used on a case-by-case basis for obtaining refined estimates of denser-than-air intermittent gaseous releases, e.g., DEGADIS;[130] guidance for the use of such models is also available.[131]

c. Many air toxics models require input of chemical properties and/or chemical engineering variables in order to appropriately characterize the source emissions prior to dispersion in the atmosphere; reference 132 is one source of helpful data. In addition, EPA has numerous programs to determine emission factors and other estimates of air toxic emissions. The Regional Office should be consulted for guidance on appropriate emission estimating procedures and any uncertainties that may be associated with them.

8.0 GENERAL MODELING CONSIDERATIONS

8.1 Discussion

a. This section contains recommendations concerning a number of different issues not explicitly covered in other sections of this guide. The topics covered here are not specific to any one program or modeling area but are common to nearly all modeling analyses.

8.2 Recommendations

8.2.1 Design Concentrations

8.2.1.1 Design Concentrations for Criteria Pollutants With Deterministic Standards

a. An air quality analysis for SO_2, CO, Pb, and NO_2 is required to determine if the source will (1) Cause a violation of the NAAQS, or (2) cause or contribute to air quality deterioration greater than the specified allowable PSD increment. For the former, background concentration (see section 9.2) should be added to the estimated impact of the source to determine the design concentration. For the latter, the design concentration includes impact from all increment consuming sources.

b. If the air quality analyses are conducted using the period of meteorological input data recommended in section 9.3.1.2 (e.g., 5 years of NWS data or 1 year of site-specific data), then the design concentration based on the

highest, second-highest short term concentration or long term average, whichever is controlling, should be used to determine emission limitations to assess compliance with the NAAQS and to determine PSD increments.

c. When sufficient and representative data exist for less than a 5-year period from a nearby NWS site, or when on-site data have been collected for less than a full continuous year, or when it has been determined that the on site data may not be temporally representative, then the highest concentration estimate should be considered the design value. This is because the length of the data record may be too short to assure that the conditions producing worst-case estimates have been adequately sampled. The highest value is then a surrogate for the concentration that is not to be exceeded more than once per year (the wording of the deterministic standards). Also, the highest concentration should be used whenever selected worst-case conditions are input to a screening technique. This specifically applies to the use of techniques such as outlined in ''Screening Procedures for Estimating the Air Quality Impact of Stationary Sources, Revised''.[18] Specific guidance for CO may be found in the ''Guideline for Modeling Carbon Monoxide from Roadway Intersections''.[34]

d. If the controlling concentration is an annual average value and multiple years of data (on-site or NWS) are used, then the design value is the highest of the annual averages calculated for the individual years. If the controlling concentration is a quarterly average and multiple years are used, then the highest individual quarterly average should be considered the design value.

e. As long a period of record as possible should be used in making estimates to determine design values and PSD increments. If more than 1 year of site-specific data is available, it should be used.

8.2.1.2 Design Concentrations for Criteria Pollutants With Expected Exceedance Standards

a. Specific instructions for the determination of design concentrations for criteria pollutants with expected exceedance standards, ozone and PM–10, are contained in special guidance documents for the preparation of SIPs for those pollutants.[86 108] For all SIP revisions the user should check with the Regional Office to obtain the most recent guidance documents and policy memoranda concerning the pollutant in question.

8.2.2 Critical Receptor Sites

a. Receptor sites for refined modeling should be utilized in sufficient detail to estimate the highest concentrations and possible violations of a NAAQS or a PSD increment. In designing a receptor network, the emphasis should be placed on receptor resolution and location, not total number of receptors. The selection of receptor sites should be a case-by-case determination taking into consideration the topography, the climatology, monitor sites, and the results of the initialscreening procedure. For large sources (those equivalent to a 500MW power plant) and where violations of the NAAQS or PSD increment are likely, 360 receptors for a polar coordinate grid system and 400 receptors for a rectangular grid system, where the distance from the source to the farthest receptor is 10km, are usually adequate to identify areas of high concentration. Additional receptors may be needed in the high concentration location if greater resolution is indicated by terrain or source factors.

8.2.3 Dispersion Coefficients

a. Gaussian models used in most applications should employ dispersion coefficients consistent with those contained in the preferred models in appendix A. Factors such as averaging time, urban/rural surroundings, and type of source (point vs. line) may dictate the selection of specific coefficients. Generally, coefficients used in appendix A models are identical to, or at least based on, Pasquill-Gifford coefficients[50] in rural areas and McElroy-Pooler[51] coefficients in urban areas.

b. Research is continuing toward the development of methods to determine dispersion coefficients directly from measured or observed variables.[52 53] No method to date has proved to be widely applicable. Thus, direct measurement, as well as other dispersion coefficients related to distance and stability, may be used in Gaussian modeling only if a demonstration can be made that such parameters are more applicable and accurate for the given situation than are algorithms contained in the preferred models.

c. Buoyancy-induced dispersion (BID), as identified by Pasquill,[54] is included in the preferred models and should be used where buoyant sources, e.g., those involving fuel combustion, are involved.

8.2.4 Stability Categories

a. The Pasquill approach to classifying stability is generally required in all preferred models (Appendix A). The Pasquill method, as modified by Turner,[55] was developed for use with commonly observed meteorological data from the National Weather Service and is based on cloud cover, insolation and wind speed.

b. Procedures to determine Pasquill stability categories from other than NWS data are found in subsection 9.3. Any other method to determine Pasquill stability categories must be justified on a case-by-case basis.

c. For a given model application where stability categories are the basis for selecting

dispersion coefficients, both σ_y and σ_z should be determined from the same stability category. ''Split sigmas'' in that instance are not recommended.

d. Sector averaging, which eliminates the σ_y term, is generally acceptable only to determine long term averages, such as seasonal or annual, and when the meteorological input data are statistically summarized as in the STAR summaries. Sector averaging is, however, commonly acceptable in complex terrain screening methods.

8.2.5 Plume Rise

a. The plume rise methods of Briggs[56 57] are incorporated in the preferred models and are recommended for use in all modeling applications. No provisions in these models are made for fumigation or multistack plume rise enhancement or the handling of such special plumes as flares; these problems should be considered on a case-by-case basis.

b. Since there is insufficient information to identify and quantify dispersion during the transitional plume rise period, gradual plume rise is not generally recommended for use. There are two exceptions where the use of gradual plume rise is appropriate: (1) In complex terrain screening procedures to determine close-in impacts; (2) when calculating the effects of building wakes. The building wake algorithm in the ISC model incorporates and automatically (i.e., internally) exercises the gradual plume rise calculations. If the building wake is calculated to affect the plume for any hour, gradual plume rise is also used in downwind dispersion calculations to the distance of final plume rise, after which final plume rise is used.

c. Stack tip downwash generally occurs with poorly constructed stacks and when the ratio of the stack exit velocity to wind speed is small. An algorithm developed by Briggs (Hanna et al.)[57] is the recommended technique for this situation and is found in the point source preferred models.

d. Where aerodynamic downwash occurs due to the adverse influence of nearby structures, the algorithms included in the ISC model[58] should be used.

8.2.6 Chemical Transformation

a. The chemical transformation of SO_2 emitted from point sources or single industrial plants in rural areas is generally assumed to be relatively unimportant to the estimation of maximum concentrations when travel time is limited to a few hours. However, in urban areas, where synergistic effects among pollutants are of considerable consequence, chemical transformation rates may be of concern. In urban area applications, a half-life of 4 hours[55] may be applied to the analysis of SO_2 emissions. Calculations of transformation coefficients from site-specific studies can be used to define a ''half-life'' to be used in a Gaussian model with any travel time, or in any application, if appropriate documentation is provided. Such conversion factors for pollutant half-life should not be used with screening analyses.

b. Complete conversion of NO to NO_2 should be assumed for all travel time when simple screening techniques are used to model point source emissions of nitrogen oxides. If a Gaussian model is used, and data are available on seasonal variations in maximum ozone concentrations, the Ozone Limiting Method[36] is recommended. In refined analyses, case-by case conversion rates based on technical studies appropriate to the site in question may be used. The use of more sophisticated modeling techniques should be justified for individual cases.

c. Use of models incorporating complex chemical mechanisms should be considered only on a case-by-case basis with proper demonstration of applicability. These are generally regional models not designed for the evaluation of individual sources but used primarily for region-wide evaluations. Visibility models also incorporate chemical transformation mechanisms which are an integral part of the visibility model itself and should be used in visibility assessments.

8.2.7 Gravitational Settling and Deposition

a. An ''infinite half-life'' should be used for estimates of particle concentrations when Gaussian models containing only exponential decay terms for treating settling and deposition are used.

b. Gravitational settling and deposition may be directly included in a model if either is a significant factor. One preferred model (ISC) contains a settling and deposition algorithm and is recommended for use when particulate matter sources can be quantified and settling and deposition are problems.

8.2.8 Urban/Rural Classification

a. The selection of either rural or urban dispersion coefficients in a specific application should follow one of the procedures suggested by Irwin[59] and briefly described below. These include a land use classification procedure or a population based procedure to determine whether the character of an area is primarily urban or rural.

b. Land Use Procedure: (1) Classify the land use within the total area, A_o, circumscribed by a 3km radius circle about the source using the meteorological land use typing scheme proposed by Auer[60]; (2) if land use types I1, I2, C1, R2, and R3 account for 50 percent or more of A_o, use urban dispersion coefficients; otherwise, use appropriate rural dispersion coefficients.

c. Population Density Procedure: (1) Compute the average population density, p per

square-kilometer with A_o as defined above; (2) If p is greater than 750 people/km^2, use urban dispersion coefficients; otherwise use appropriate rural dispersion coefficients.

d. Of the two methods, the land use procedure is considered more definitive. Population density should be used with caution and should not be applied to highly industrialized areas where the population density may be low and thus a rural classification would be indicated, but the area is sufficiently built-up so that the urban land use criteria would be satisfied. In this case, the classification should already be ''urban'' and urban dispersion parameters should be used.

e. Sources located in an area defined as urban should be modeled using urban dispersion parameters. Sources located in areas defined as rural should be modeled using the rural dispersion parameters. For analyses of whole urban complexes, the entire area should be modeled as an urban region if most of the sources are located in areas classified as urban.

8.2.9 Fumigation

a. Fumigation occurs when a plume (or multiple plumes) is emitted into a stable layer of air and that layer is subsequently mixed to the ground either through convective transfer of heat from the surface or because of advection to less stable surroundings. Fumigation may cause excessively high concentrations but is usually rather short-lived at a given receptor. There are no recommended refined techniques to model this phenomenon. There are, however, screening procedures (see ''Screening Procedures for Estimating the Air Quality Impact of Stationary Sources''[18]) that may be used to approximate the concentrations. Considerable care should be exercised in using the results obtained from the screening techniques.

b. Fumigation is also an important phenomenon on and near the shoreline of bodies of water. This can affect both individual plumes and area-wide emissions. When fumigation conditions are expected to occur from a source or sources with tall stacks located on or just inland of a shoreline, this should be addressed in the air quality modeling analysis. The Shoreline Dispersion Model (SDM) listed in appendix B may be applied on a case-by-case basis when air quality estimates under shoreline fumigation conditions are needed.[133] Information on the results of EPA's evaluation of this model together with other coastal fumigation models may be found in reference 134. Selection of the appropriate model for applications where shoreline fumigation is of concern should be determined in consultation with the Regional Office.

8.2.10 Stagnation

a. Stagnation conditions are characterized by calm or very low wind speeds, and variable wind directions. These stagnant meteorological conditions may persist for several hours to several days. During stagnation conditions, the dispersion of air pollutants, especially those from low-level emissions sources, tends to be minimized, potentially leading to relatively high ground-level concentrations.

b. When stagnation periods such as these are found to occur, they should be addressed in the air quality modeling analysis. WYNDvalley, listed in appendix B, may be applied on a case-by-case basis for stagnation periods of 24 hours or longer in valley-type situations. Caution should be exercised when applying the model to elevated point sources. Users should consult with the appropriate Regional Office prior to regulatory application of WYNDvalley.

8.2.11 Calibration of Models

a. Calibration of long term multi-source models has been a widely used procedure even though the limitations imposed by statistical theory on the reliability of the calibration process for long term estimates are well known.[61] In some cases, where a more accurate model is not available, calibration may be the best alternative for improving the accuracy of the estimated concentrations needed for control strategy evaluations.

b. Calibration of short term models is not common practice and is subject to much greater error and misunderstanding. There have been attempts by some to compare short term estimates and measurements on an event-by-event basis and then to calibrate a model with results of that comparison. This approach is severely limited by uncertainties in both source and meteorological data and therefore it is difficult to precisely estimate the concentration at an exact location for a specific increment of time. Such uncertainties make calibration of short term models of questionable benefit. Therefore, short term model calibration is unacceptable.

9.0 MODEL INPUT DATA

a. Data bases and related procedures for estimating input parameters are an integral part of the modeling procedure. The most appropriate data available should always be selected for use in modeling analyses. Concentrations can vary widely depending on the source data or meteorological data used. Input data are a major source of inconsistencies in any modeling analysis. This section attempts to minimize the uncertainty associated with data base selection and use by identifying requirements for data used in

modeling. A checklist of input data requirements for modeling analyses is included as appendix C. More specific data requirements and the format required for the individual models are described in detail in the users' guide for each model.

9.1 Source Data

9.1.1 Discussion

a. Sources of pollutants can be classified as point, line and area/volume sources. Point sources are defined in terms of size and may vary between regulatory programs. The line sources most frequently considered are roadways and streets along which there are well-defined movements of motor vehicles, but they may be lines of roof vents or stacks such as in aluminum refineries. Area and volume sources are often collections of a multitude of minor sources with individually small emissions that are impractical to consider as separate point or line sources. Large area sources are typically treated as a grid network of square areas, with pollutant emissions distributed uniformly within each grid square.

b. Emission factors are compiled in an EPA publication commonly known as AP–42[62]; an indication of the quality and amount of data on which many of the factors are based is also provided. Other information concerning emissions is available in EPA publications relating to specific source categories. The Regional Office should be consulted to determine appropriate source definitions and for guidance concerning the determination of emissions from and techniques for modeling the various source types.

9.1.2 Recommendations

a. For point source applications the load or operating condition that causes maximum ground-level concentrations should be established. As a minimum, the source should be modeled using the design capacity (100 percent load). If a source operates at greater than design capacity for periods that could result in violations of the standards or PSD increments, this load[e] should be modeled. Where the source operates at substantially less than design capacity, and the changes in the stack parameters associated with the operating conditions could lead to higher ground level concentrations, loads such as 50 percent and 75 percent of capacity should also be modeled. A range of operating conditions should be considered in screening analyses; the load causing the highest concentration, in addition to the design load, should be included in refined modeling. For a power plant, the following paragraphs b through h of this section describe the typical kind of data on source characteristics and operating conditions that may be needed. Generally, input data requirements for air quality models necessitate the use of metric units; where English units are common for engineering usage, a conversion to metric is required.

b. Plant layout. The connection scheme between boilers and stacks, and the distance and direction between stacks, building parameters (length, width, height, location and orientation relative to stacks) for plant structures which house boilers, control equipment, and surrounding buildings within a distance of approximately five stack heights.

c. Stack parameters. For all stacks, the stack height and inside diameter (meters), and the temperature (K) and volume flow rate (actual cubic meters per second) or exit gas velocity (meters per second) for operation at 100 percent, 75 percent and 50 percent load.

d. Boiler size. For all boilers, the associated megawatts, 10^6 BTU/hr, and pounds of steam per hour, and the design and/or actual fuel consumption rate for 100 percent load for coal (tons/hour), oil (barrels/hour), and natural gas (thousand cubic feet/hour).

e. Boiler parameters. For all boilers, the percent excess air used, the boiler type (e.g., wet bottom, cyclone, etc.), and the type of firing (e.g., pulverized coal, front firing, etc.).

f. Operating conditions. For all boilers, the type, amount and pollutant contents of fuel, the total hours of boiler operation and the boiler capacity factor during the year, and the percent load for peak conditions.

g. Pollution control equipment parameters. For each boiler served and each pollutant affected, the type of emission control equipment, the year of its installation, its design efficiency and mass emission rate, the data of the last test and the tested efficiency, the number of hours of operation during the latest year, and the best engineering estimate of its projected efficiency if used in conjunction with coal combustion; data for any anticipated modifications or additions.

h. Data for new boilers or stacks. For all new boilers and stacks under construction and for all planned modifications to existing boilers or stacks, the scheduled date of completion, and the data or best estimates available for paragraphs b through g of this section above following completion of construction or modification.

i. In stationary point source applications for compliance with short term ambient

[e] Malfunctions which may result in excess emissions are not considered to be a normal operating condition. They generally should not be considered in determining allowable emissions. However, if the excess emissions are the result of poor maintenance, careless operation, or other preventable conditions, it may be necessary to consider them in determining source impact.

standards, SIP control strategies should be tested using the emission input shown on table 9–1. When using a refined model, sources should be modeled sequentially with these loads for every hour of the year. To evaluate SIPs for compliance with quarterly and annual standards, emission input data shown in table 9–1 should again be used. Emissions from area sources should generally be based on annual average conditions. The source input information in each model user's guide should be carefully consulted and the checklist in appendix C should also be consulted for other possible emission data that could be helpful. PSD NAAQS compliance demonstrations should follow the emission input data shown in table 9–2. For purposes of emissions trading, new source review and demonstrations, refer to current EPA policy and guidance to establish input data.

j. Line source modeling of streets and highways requires data on the width of the roadway and the median strip, the types and amounts of pollutant emissions, the number of lanes, the emissions from each lane and the height of emissions. The location of the ends of the straight roadway segments should be specified by appropriate grid coordinates. Detailed information and data requirements for modeling mobile sources of pollution are provided in the user's manuals for each of the models applicable to mobile sources.

k. The impact of growth on emissions should be considered in all modeling analyses covering existing sources. Increases in emissions due to planned expansion or planned fuel switches should be identified. Increases in emissions at individual sources that may be associated with a general industrial/commercial/residential expansion in multi-source urban areas should also be treated. For new sources the impact of growth on emissions should generally be considered for the period prior to the start-up date for the source. Such changes in emissions should treat increased area source emissions, changes in existing point source emissions which were not subject to preconstruction review, and emissions due to sources with permits to construct that have not yet started operation.

TABLE 9–1— MODEL EMISSION INPUT DATA FOR POINT SOURCES [1]

Averaging time	Emission limit (⊥/MMBtu) [2] ×	Operating level (MMBtu/hr) [2] ×	Operating factor (e.g., hr/yr, hr/day)
Stationary Point Source(s) Subject to SIP Emission Limit(s) Evaluation for Compliance with Ambient Standards (Including Areawide Demonstrations)			
Annual & quarterly	Maximum allowable emission limit or federally enforceable permit limit.	Actual or design capacity (whichever is greater), or federally enforceable permit condition.	Actual operating factor averaged over most recent 2 years.[3]
Short term	Maximum allowable emission limit or federally enforceable permit limit.	Actual or design capacity (whichever is greater), or federally enforceable permit condition [4].	Continuous operation, i.e., all hours of each time period under consideration (for all hours of the meteorological data base).[5]
Nearby Background Source(s)—Same input requirements as for stationary point source(s) above.			
Other Background Source(s)—If modeled (see section 9.2.3), input data requirements are defined below.			
Annual & quarterly	Maximum allowable emission limit or Federal enforceable permit limit.	Annual level when actually operating, averaged over the most recent 2 years [3].	Actual operating factor averaged over the most recent 2 years.[3]
Short term	Maximum allowable emission limit or federally enforceable permit limit.	Annual level when actually operating, averaged over the most recent 2 years [3].	Continuous operation, i.e., all hours of each time period under consideration (for all hours of the meteorological data base).[5]

[1] The model input data requirements shown on this table apply to stationary source control strategies for STATE IMPLEMENTATION PLANS. For purposes of emissions trading, new source review, or prevention of significant deterioration, other model input criteria may apply. Refer to the policy and guidance for these programs to establish the input data.

[2] Terminology applicable to fuel burning sources; analogous terminology (e.g., ⊥/throughput) may be used for other types of sources.

[3] Unless it is determined that this period is not representative.

[4] Operating levels such as 50 percent and 75 percent of capacity should also be modeled to determine the load causing the highest concentration.

[5] If operation does not occur for all hours of the time period of consideration (e.g., 3 or 24 hours) and the source operation is constrained by a federally enforceable permit condition, an appropriate adjustment to the modeled emission rate may be made (e.g., if operation is only 8:00 a.m. to 4:00 p.m. each day, only these hours will be modeled with emissions from the source. Modeled emissions should not be averaged across non-operating time periods.)

TABLE 9–2—POINT SOURCE MODEL INPUT DATA (EMISSIONS) FOR PSD NAAQS COMPLIANCE DEMONSTRATIONS

Averaging time	Emission limit (⊥/MMBtu) [1] ×	Operating level (MMBtu/hr) [1] ×	Operating factor (e.g., hr/yr, hr/day)
Proposed Major New or Modified Source			
Annual & quarterly	Maximum allowable emission limit or federally enforceable permit limit.	Design capacity or federally enforceable permit condition.	Continuous operation (i.e., 8760 hours).[2]
Short term (≤ 24 hours) ..	Maximum allowable emission limit or federally enforceable permit limit.	Design capacity or federally enforceable permit condition.[3]	Continuous operation (i.e., all hours of each time period under consideration) (for all hours of the meteorological data base).[2]
Nearby Background Source(s) [4]			
Annual & quarterly	Maximum allowable emission limit or federally enforceable permit limit.	Actual or design capacity (whichever is greater), or federally enforceable permit condition.	Actual operating factor averaged over the most recent 2 years.[5 7]
Short term (≤ 24 hours) ..	Maximum allowable emission limit or federally enforceable permit limit.	Actual or design capacity (whichever is greater), or federally enforceable permit condition.[3]	Continuous operation (i.e., all hours of each time period under consideration) (for all hours of the meteorological data base).[2]
Other Background Source(s) [6]			
Annual & quarterly	Maximum allowable emission limit or federally enforceable permit limit.	Annual level when actually operating, averaged over the most recent 2 years.[5]	Actual operating factor averaged over the most recent 2 years.[5 7]
Short term (≤ 24 hours) ..	Maximum allowable emission limit or federally enforceable permit limit.	Annual level when actually operating, averaged over the most recent 2 years.[5]	Continuous operation (i.e., all hours of each time period under consideration) (for all hours of the meteorological data base).[2]

[1] Terminology applicable to fuel burning sources; analogous terminology (e.g., ⊥/throughput) may be used for other types of sources.

[2] hnsp;If operation does not occur for all hours of the time period of consideration (e.g., 3 or 24 hours) and the source operation is constrained by a federally enforceable permit condition, an appropriate adjustment to the modeled emission rate may be made (e.g., if operation is only 8:00 a.m. to 4:00 p.m. each day, only these hours will be modeled with emissions from the source. Modeled emissions should not be averaged across non-operating time periods.

[3] Operating levels such as 50 percent and 75 percent of capacity should also be modeled to determine the load causing the highest concentration.

[4] Includes existing facility to which modification is proposed if the emissions from the existing facility will not be affected by the modification. Otherwise use the same parameters as for major modification.

[5] Unless it is determined that this period is not representative.

[6] Generally, the ambient impacts from non-nearby background sources can be represented by air quality data unless adequate data do not exist.

[7] For those permitted sources not yet in operation or that have not established an appropriate factor, continuous operation (i.e., 8760 hours) should be used.

9.2 Background Concentrations

9.2.1 Discussion

a. Background concentrations are an essential part of the total air quality concentration to be considered in determining source impacts. Background air quality includes pollutant concentrations due to: (1) natural sources; (2) nearby sources other than the one(s) currently under consideration; and (3) unidentified sources.

b. Typically, air quality data should be used to establish background concentrations in the vicinity of the source(s) under consideration. The monitoring network used for background determinations should conform to the same quality assurance and other requirements as those networks established for PSD purposes.[63] An appropriate data validation procedure should be applied to the data prior to use.

c. If the source is not isolated, it may be necessary to use a multi-source model to establish the impact of nearby sources. Background concentrations should be determined for each critical (concentration) averaging time.

9.2.2 Recommendations (Isolated Single Source)

a. Two options (paragraph b or c of this section) are available to determine the background concentration near isolated sources.

b. Use air quality data collected in the vicinity of the source to determine the background concentration for the averaging times of concern.[f] Determine the mean background concentration at each monitor by excluding values when the source in question is impacting the monitor. The mean annual background is the average of the annual concentrations so determined at each monitor. For shorter averaging periods, the meteorological conditions accompanying the concentrations of concern should be identified. Concentrations for meteorological conditions of concern, at monitors not impacted by the source in question, should be averaged for each separate averaging time to determine the average background value. Monitoring sites inside a 90° sector downwind of the source may be used to determine the area of impact. One hour concentrations may be added and averaged to determine longer averaging periods.

c. If there are no monitors located in the vicinity of the source, a ''regional site'' may be used to determine background. A ''regional site'' is one that is located away from the area of interest but is impacted by similar natural and distant man-made sources.

9.2.3 Recommendations (Multi-Source Areas)

a. In multi-source areas, two components of background should be determined.

b. Nearby Sources: All sources expected to cause a significant concentration gradient in the vicinity of the source or sources under consideration for emission limit(s) should be explicitly modeled. For evaluation for compliance with the short term and annual ambient standards, the nearby sources should be modeled using the emission input data shown in table 9–1 or 9–2. The number of such sources is expected to be small except in unusual situations. The nearby source inventory should be determined in consultation with the reviewing authority. It is envisioned that the nearby sources and the sources under consideration will be evaluated together using an appropriate appendix A model.

c. The impact of the nearby sources should be examined at locations where interactions between the plume of the point source under consideration and those of nearby sources (plus natural background) can occur. Significant locations include: (1) the area of maximum impact of the point source; (2) the area of maximum impact of nearby sources; and (3) the area where all sources combine to cause maximum impact. These locations may be identified through trial and error analyses.

d. Other Sources: That portion of the background attributable to all other sources (e.g., natural sources, minor sources and distant major sources) should be determined by the procedures found in section 9.2.2 or by application of a model using table 9–1 or 9–2.

9.3 Meteorological Input Data

a. The meteorological data used as input to a dispersion model should be selected on the basis of spatial and climatological (temporal) representativeness as well as the ability of the individual parameters selected to characterize the transport and dispersion conditions in the area of concern. The representativeness of the data is dependent on: (1) the proximity of the meteorological monitoring site to the area under consideration; (2) the complexity of the terrain; (3) the exposure of the meteorological monitoring site; and (4) the period of time during which data are collected. The spatial representativeness of the data can be adversely affected by large distances between the source and receptors of interest and the complex topographic characteristics of the area. Temporal representativeness is a function of the year-to-year variations in weather conditions.

b. Model input data are normally obtained either from the National Weather Service or as part of an on-site measurement program. Local universities, Federal Aviation Administration (FAA), military stations, industry and pollution control agencies may also be sources of such data. Some recommendations for the use of each type of data are included in this section 9.3.

9.3.1 Length of Record of Meteorological Data

9.3.1.1 Discussion

a. The model user should acquire enough meteorological data to ensure that worst-case meteorological conditions are adequately represented in the model results. The trend toward statistically based standards suggests a need for all meteorological conditions to be adequately represented in the data set selected for model input. The number of years of record needed to obtain a stable distribution of conditions depends on the variable being measured and has been estimated by Landsberg and Jacobs[64] for various parameters. Although that study indicates in excess of 10 years may be required to achieve stability in the frequency distributions of some meteorological variables, such long periods are not reasonable for model input data. This is due in part to the fact that hourly data in model input format are

[f] For purposes of PSD, the location of monitors as well as data quality assurance procedures must satisfy requirements listed in the PSD Monitoring Guidelines.[63]

frequently not available for such periods and that hourly calculations of concentration for long periods are prohibitively expensive. A recent study[65] compared various periods from a 17-year data set to determine the minimum number of years of data needed to approximate the concentrations modeled with a 17-year period of meteorological data from one station. This study indicated that the variability of model estimates due to the meteorological data input was adequately reduced if a 5-year period of record of meteorological input was used.

9.3.1.2 Recommendations

a. Five years of representative meteorological data should be used when estimating concentrations with an air quality model. Consecutive years from the most recent, readily available 5-year period are preferred. The meteorological data may be data collected either onsite or at the nearest National Weather Service (NWS) station. If the source is large, e.g., a 500MW power plant, the use of 5 years of NWS meteorological data or at least 1 year of site-specific data is required.

b. If one year or more, up to five years, of site-specific data is available, these data are preferred for use in air quality analyses. Such data should have been subjected to quality assurance procedures as described in section 9.3.3.2.

c. For permitted sources whose emission limitations are based on a specific year of meteorological data that year should be added to any longer period being used (e.g., 5 years of NWS data) when modeling the facility at a later time.

9.3.2 National Weather Service Data

9.3.2.1 Discussion

a. The National Weather Service (NWS) meteorological data are routinely available and familiar to most model users. Although the NWS does not provide direct measurements of all the needed dispersion model input variables, methods have been developed and successfully used to translate the basic NWS data to the needed model input. Direct measurements of model input parameters have been made for limited model studies and those methods and techniques are becoming more widely applied; however, most model applications still rely heavily on the NWS data.

b. There are two standard formats of the NWS data for use in air quality models. The short term models use the standard hourly weather observations available from the National Climatic Data Center (NCDC). These observations are then ''preprocessed'' before they can be used in the models. ''STAR'' summaries are available from NCDC for long term model use. These are joint frequency distributions of wind speed, direction and P–G stability category. They are used as direct input to models such as the long term version of ISC.[58]

9.3.2.2 Recommendations

a. The preferred short term models listed in appendix A all accept as input the NWS meteorological data preprocessed into model compatible form. Long-term (monthly seasonal or annual) preferred models use NWS ''STAR'' summaries. Summarized concentration estimates from the short term models may also be used to develop long-term averages; however, concentration estimates based on the two separate input data sets may not necessarily agree.

b. Although most NWS measurements are made at a standard height of 10 meters, the actual anemometer height should be used as input to the preferred model.

c. National Weather Service wind directions are reported to the nearest 10 degrees. A specific set of randomly generated numbers has been developed for use with the preferred EPA models and should be used to ensure a lack of bias in wind direction assignments within the models.

d. Data from universities, FAA, military stations, industry and pollution control agencies may be used if such data are equivalent in accuracy and detail to the NWS data.

9.3.3 Site-Specific Data

9.3.3.1 Discussion

a. Spatial or geographical representativeness is best achieved by collection of all of the needed model input data at the actual site of the source(s). Site-specific measured data are therefore preferred as model input, provided appropriate instrumentation and quality assurance procedures are followed and that the data collected are representative (free from undue local or ''micro'' influences) and compatible with the input requirements of the model to be used. However, direct measurements of all the needed model input parameters may not be possible. This section discusses suggestions for the collection and use of on-site data. Since the methods outlined in this section are still being tested, comparison of the model parameters derived using these site-specific data should be compared at least on a spot-check basis, with parameters derived from more conventional observations.

9.3.3.2 Recommendations: Site-specific Data Collection

a. The document ''On-Site Meteorological Program Guidance for Regulatory Modeling Applications''[66] provides recommendations

on the collection and use of on-site meteorological data. Recommendations on characteristics, siting, and exposure of meteorological instruments and on data recording, processing, completeness requirements, reporting, and archiving are also included. This publication should be used as a supplement to the limited guidance on these subjects now found in the ''Ambient Monitoring Guidelines for Prevention of Significant Deterioration''.[63] Detailed information on quality assurance is provided in the ''Quality Assurance Handbook for Air Pollution Measurement Systems: Volume IV''.[67] As a minimum, site-specific measurements of ambient air temperature, transport wind speed and direction, and the parameters to determine Pasquill-Gifford (P–G) stability categories should be available in meteorological data sets to be used in modeling. Care should be taken to ensure that meteorological instruments are located to provide representative characterization of pollutant transport between sources and receptors of interest. The Regional Office will determine the appropriateness of the measurement locations.

b. All site-specific data should be reduced to hourly averages. Table 9–3 lists the wind related parameters and the averaging time requirements.

c. Solar Radiation Measurements. Total solar radiation should be measured with a reliable pyranometer, sited and operated in accordance with established on-site meteorological guidance.[66]

d. Temperature Measurements. Temperature measurements should be made at standard shelter height (2m) in accordance with established on-site meteorological guidance.[66]

e. Temperature Difference Measurements. Temperature difference (°) measurements for use in estimating P–G stability categories using the solar radiation/delta-T (SRDT) methodology (see Stability Categories) should be obtained using two matched thermometers or a reliable thermocouple system to achieve adequate accuracy.

f. Siting, probe placement, and operation of ΔT systems should be based on guidance found in Chapter 3 of reference 66, and such guidance should be followed when obtaining vertical temperature gradient data for use in plume rise estimates or in determining the critical dividing streamline height.

g. Wind Measurements. For refined modeling applications in simple terrain situations, if a source has a stack below 100m, select the stack top height as the wind measurement height for characterization of plume dilution and transport. For sources with stacks extending above 100m, a 100m tower is suggested unless the stack top is significantly above 100m (i.e., ≥200m). In cases with stack tops ≥200m, remote sensing may be a feasible alternative. In some cases, collection of stack top wind speed may be impractical or incompatible with the input requirements of the model to be used. In such cases, the Regional Office should be consulted to determine the appropriate measurement height.

h. For refined modeling applications in complex terrain, multiple level (typically three or more) measurements of wind speed and direction, temperature and turbulence (wind fluctuation statistics) are required. Such measurements should be obtained up to the representative plume height(s) of interest (i.e., the plume height(s) under those conditions important to the determination of the design concentration). The representative plume height(s) of interest should be determined using an appropriate complex terrain screening procedure (e.g., CTSCREEN) and should be documented in the monitoring/modeling protocol. The necessary meteorological measurements should be obtained from an appropriately sited meteorological tower augmented by SODAR if the representative plume height(s) of interest exceed 100m. The meteorological tower need not exceed the lesser of the representative plume height of interest (the highest plume height if there is more than one plume height of interest) or 100m.

i. In general, the wind speed used in determining plume rise is defined as the wind speed at stack top.

j. Specifications for wind measuring instruments and systems are contained in the ''On-Site Meteorological Program Guidance for Regulatory Modeling Applications''.[66]

k. Stability Categories. The P–G stability categories, as originally defined, couple near-surface measurements of wind speed with subjectively determined insolation assessments based on hourly cloud cover and ceiling height observations. The wind speed measurements are made at or near 10m. The insolation rate is typically assessed using observations of cloud cover and ceiling height based on criteria outlined by Turner.[50] It is recommended that the P–G stability category be estimated using the Turner method with site-specific wind speed measured at or near 10m and representative cloud cover and ceiling height. Implementation of the Turner method, as well as considerations in determining representativeness of cloud cover and ceiling height in cases for which site-specific cloud observations are unavailable, may be found in section 6 of reference 66. In the absence of requisite data to implement the Turner method, the SRDT method or wind fluctuation statistics (i.e., the σ_E and σ_A methods) may be used.

l. The SRDT method, described in section 6.4.4.2 of reference 66, is modified slightly from that published by Bowen et al. (1983)[136] and has been evaluated with three on-site data bases.[137] The two methods of stability classification which use wind fluctuation

statistics, the σ_E and σ_A methods, are also described in detail in section 6.4.4 of reference 66 (note applicable tables in section 6). For additional information on the wind fluctuation methods, see references 68–72.

m. Hours in the record having missing data should be treated according to an established data substitution protocol and after valid data retrieval requirements have been met. Such protocols are usually part of the approved monitoring program plan. Data substitution guidance is provided in section 5.3 of reference 66.

n. Meteorological Data Processors. The following meteorological preprocessors are recommended by EPA: RAMMET, PCRAMMET, STAR, PCSTAR, MPRM,[135] and METPRO.[24] RAMMET is the recommended meteorological preprocessor for use in applications employing hourly NWS data. The RAMMET format is the standard data input format used in sequential Gaussian models recommended by EPA. PCRAMMET[138] is the PC equivalent of the mainframe version (RAMMET). STAR is the recommended preprocessor for use in applications employing joint frequency distributions (wind direction and wind speed by stability class) based on NWS data. PCSTAR is the PC equivalent of the mainframe version (STAR). MPRM is the recommended preprocessor for use in applications employing on-site meteorological data. The latest version (MPRM 1.3) has been configured to implement the SRDT method for estimating P–G stability categories. MPRM is a general purpose meteorological data preprocessor which supports regulatory models requiring RAMMET formatted data and STAR formatted data. In addition to on-site data, MPRM provides equivalent processing of NWS data. METPRO is the required meteorological data preprocessor for use with CTDMPLUS. All of the above mentioned data preprocessors are available for downloading from the SCRAM BBS.[19]

TABLE 9–3—AVERAGING TIMES FOR SITE-SPECIFIC WIND AND TURBULENCE MEASUREMENTS

Parameter	Averaging time
Surface wind speed (for use in stability determinations).	1-hr.
Transport direction	1-hr.
Dilution wind speed	1-hr.
Turbulence measurements (σ_E and σ_A) for use in stability determinations.	1-hr.[1]

[1] To minimize meander effects in σ_A when wind conditions are light and/or variable, determine the hourly average σ value from four sequential 15-minute σ's according to the following formula:

$$\sigma_{1\text{-hr}} = \sqrt{\frac{\sigma_{15}{}^2 + \sigma_{15}{}^2 + \sigma_{15}{}^2 + \sigma_{15}{}^2}{4}}$$

9.3.4 Treatment of Calms

9.3.4.1 Discussion

a. Treatment of calm or light and variable wind poses a special problem in model applications since Gaussian models assume that concentration is inversely proportional to wind speed. Furthermore, concentrations become unrealistically large when wind speeds less than 1 m/s are input to the model. A procedure has been developed for use with NWS data to prevent the occurrence of overly conservative concentration estimates during periods of calms. This procedure acknowledges that a Gaussian plume model does not apply during calm conditions and that our knowledge of plume behavior and wind patterns during these conditions does not, at present, permit the development of a better technique. Therefore, the procedure disregards hours which are identified as calm. The hour is treated as missing and a convention for handling missing hours is recommended.

b. Preprocessed meteorological data input to most appendix A EPA models substitute a 1.00 m/s wind speed and the previous direction for the calm hour. The new treatment of calms in those models attempts to identify the original calm cases by checking for a 1.00 m/s wind speed coincident with a wind direction equal to the previous hour's wind direction. Such cases are then treated in a prescribed manner when estimating short term concentrations.

9.3.4.2 Recommendations

a. Hourly concentrations calculated with Gaussian models using calms should not be considered valid; the wind and concentration estimates for these hours should be disregarded and considered to be missing. Critical concentrations for 3-, 8-, and 24-hour averages should be calculated by dividing the sum of the hourly concentration for the period by the number of valid or non-missing hours. If the total number of valid hours is less than 18 for 24-hour averages, less than 6 for 8-hour averages or less than 3 for 3-hour averages, the total concentration should be divided by 18 for the 24-hour average, 6 for the 8-hour average and 3 for the 3-hour average. For annual averages, the sum of all valid hourly concentrations is divided by the number of non-calm hours during the year. A post-processor computer program, CALMPRO[73] has been prepared following these instructions and has been coded in RAM and ISC.

b. The recommendations in paragraph a of this section apply to the use of calms for short term averages and do not apply to the determination of long term averages using ''STAR'' data summaries. Calms should continue to be included in the preparation of ''STAR'' summaries. A treatment for calms

and very light winds is built into the software that produces the ''STAR'' summaries.

c. Stagnant conditions, including extended periods of calms, often produce high concentrations over wide areas for relatively long averaging periods. The standard short term Gaussian models are often not applicable to such situations. When stagnation conditions are of concern, other modeling techniques should be considered on a case-by-case basis (see also section 8.2.10).

d. When used in Gaussian models, measured on-site wind speeds of less than 1 m/s but higher than the response threshold of the instrument should be input as 1 m/s; the corresponding wind direction should also be input. Observations below the response threshold of the instrument are also set to 1 m/s but the wind direction from the previous hour is used. If the wind speed or direction can not be determined, that hour should be treated as missing and short term averages should then be calculated as described in paragraph a of this section.

10.0 Accuracy and Uncertainty of Models

10.1 Discussion

a. Increasing reliance has been placed on concentration estimates from models as the primary basis for regulatory decisions concerning source permits and emission control requirements. In many situations, such as review of a proposed source, no practical alternative exists. Therefore, there is an obvious need to know how accurate models really are and how any uncertainty in the estimates affects regulatory decisions. EPA recognizes the need for incorporating such information and has sponsored workshops[11 74] on model accuracy, the possible ways to quantify accuracy, and on considerations in the incorporation of model accuracy and uncertainty in the regulatory process. The Second (EPA) Conference on Air Quality Modeling, August 1982,[75] was devoted to that subject.

10.1.1 Overview of Model Uncertainty

a. Dispersion models generally attempt to estimate concentrations at specific sites that really represent an ensemble average of numerous repetitions of the same event. The event is characterized by measured or ''known'' conditions that are input to the models, e.g., wind speed, mixed layer height, surface heat flux, emission characteristics, etc. However, in addition to the known conditions, there are unmeasured or unknown variations in the conditions of this event, e.g., unresolved details of the atmospheric flow such as the turbulent velocity field. These unknown conditions may vary among repetitions of the event. As a result, deviations in observed concentrations from their ensemble average, and from the concentrations estimated by the model, are likely to occur even though the known conditions are fixed. Even with a perfect model that predicts the correct ensemble average, there are likely to be deviations from the observed concentrations in individual repetitions of the event, due to variations in the unknown conditions. The statistics of these concentration residuals are termed ''inherent'' uncertainty. Available evidence suggests that this source of uncertainty alone may be responsible for a typical range of variation in concentrations of as much as #50 percent.[76]

b. Moreover, there is ''reducible'' uncertainty[77] associated with the model and its input conditions; neither models nor data bases are perfect. Reducible uncertainties are caused by: (1) Uncertainties in the input values of the known conditions—emission characteristics and meteorological data; (2) errors in the measured concentrations which are used to compute the concentration residuals; and (3) inadequate model physics and formulation. The ''reducible'' uncertainties can be minimized through better (more accurate and more representative) measurements and better model physics.

c. To use the terminology correctly, reference to model accuracy should be limited to that portion of reducible uncertainty which deals with the physics and the formulation of the model. The accuracy of the model is normally determined by an evaluation procedure which involves the comparison of model concentration estimates with measured air quality data.[78] The statement of accuracy is based on statistical tests or performance measures such as bias, noise, correlation, etc.[11] However, information that allows a distinction between contributions of the various elements of inherent and reducible uncertainty is only now beginning to emerge. As a result most discussions of the accuracy of models make no quantitative distinction between (1) Limitations of the model versus (2) limitations of the data base and of knowledge concerning atmospheric variability. The reader should be aware that statements on model accuracy and uncertainty may imply the need for improvements in model performance that even the ''perfect'' model could not satisfy.

10.1.2 Studies of Model Accuracy

a. A number of studies[79 80] have been conducted to examine model accuracy, particularly with respect to the reliability of short-term concentrations required for ambient standard and increment evaluations. The results of these studies are not surprising. Basically, they confirm what leading atmospheric scientists have said for some time: (1) Models are more reliable for estimating longer time-averaged concentrations than for estimating short-term concentrations at specific locations; and (2) the models are reasonably reliable in estimating the magnitude

of highest concentrations occurring sometime, somewhere within an area. For example, errors in highest estimated concentrations of #10 to 40 percent are found to be typical,[81] i.e., certainly well within the often quoted factor-of-two accuracy that has long been recognized for these models. However, estimates of concentrations that occur at a specific time and site, are poorly correlated with actually observed concentrations and are much less reliable.

b. As noted in paragraph a of this section, poor correlations between paired concentrations at fixed stations may be due to ''reducible'' uncertainties in knowledge of the precise plume location and to unquantified inherent uncertainties. For example, Pasquill[82] estimates that, apart from data input errors, maximum ground-level concentrations at a given hour for a point source in flat terrain could be in error by 50 percent due to these uncertainties. Uncertainty of five to 10 degrees in the measured wind direction, which transports the plume, can result in concentration errors of 20 to 70 percent for a particular time and location, depending on stability and station location. Such uncertainties do not indicate that an estimated concentration does not occur, only that the precise time and locations are in doubt.

10.1.3 Use of Uncertainty in Decision-Making

a. The accuracy of model estimates varies with the model used, the type of application, and site-specific characteristics. Thus, it is desirable to quantify the accuracy or uncertainty associated with concentration estimates used in decision-making. Communications between modelers and decision-makers must be fostered and further developed. Communications concerning concentration estimates currently exist in most cases, but the communications dealing with the accuracy of models and its meaning to the decision-maker are limited by the lack of a technical basis for quantifying and directly including uncertainty in decisions. Procedures for quantifying and interpreting uncertainty in the practical application of such concepts are only beginning to evolve; much study is still required.[74 75 77]

b. In all applications of models an effort is encouraged to identify the reliability of the model estimates for that particular area and to determine the magnitude and sources of error associated with the use of the model. The analyst is responsible for recognizing and quantifying limitations in the accuracy, precision and sensitivity of the procedure. Information that might be useful to the decision-maker in recognizing the seriousness of potential air quality violations includes such model accuracy estimates as accuracy of peak predictions, bias, noise, correlation, frequency distribution, spatial extent of high concentration, etc. Both space/time pairing of estimates and measurements and unpaired comparisons are recommended. Emphasis should be on the highest concentrations and the averaging times of the standards or increments of concern. Where possible, confidence intervals about the statistical values should be provided. However, while such information can be provided by the modeler to the decision-maker, it is unclear how this information should be used to make an air pollution control decision. Given a range of possible outcomes, it is easiest and tends to ensure consistency if the decision-maker confines his judgment to use of the ''best estimate'' provided by the modeler (i.e., the design concentration estimated by a model recommended in the Guideline or an alternate model of known accuracy). This is an indication of the practical limitations imposed by current abilities of the technical community.

c. To improve the basis for decision-making, EPA has developed and is continuing to study procedures for determining the accuracy of models, quantifying the uncertainty, and expressing confidence levels in decisions that are made concerning emissions controls.[83 84] However, work in this area involves ''breaking new ground'' with slow and sporadic progress likely. As a result, it may be necessary to continue using the ''best estimate'' until sufficient technical progress has been made to meaningfully implement such concepts dealing with uncertainty.

10.1.4 Evaluation of Models

a. A number of actions are being taken to ensure that the best model is used correctly for each regulatory application and that a model is not arbitrarily imposed. First, the Guideline clearly recommends the most appropriate model be used in each case. Preferred models, based on a number of factors, are identified for many uses. General guidance on using alternatives to the preferred models is also provided. Second, all the models in eight categories (i.e., rural, urban, industrial complex, reactive pollutants, mobile source, complex terrain, visibility and long range transport) that are candidates for inclusion in the Guideline are being subjected to a systematic performance evaluation and a peer scientific review.[85] The same data bases are being used to evaluate all models within each of eight categories. Statistical performance measures, including measures of difference (or residuals) such as bias, variance of difference and gross variability of the difference, and measures of correlation such as time, space, and time and space combined as recommended by the AMS Woods Hole Workshop,[11] are being followed. The results of the scientific review are being incorporated in the Guideline and will be the basis for future revision.[12 13] Third, more specific

information has been provided for justifying the site specific use of alternative models in the documents ''Interim Procedures for Evaluating Air Quality Models'',[15] and the ''Protocol for Determining the Best Performing Model''.[17] Together these documents provide methods that allow a judgment to be made as to what models are most appropriate for a specific application. For the present, performance and the theoretical evaluation of models are being used as an indirect means to quantify one element of uncertainty in air pollution regulatory decisions.

b. In addition to performance evaluation of models, sensitivity analyses are encouraged since they can provide additional information on the effect of inaccuracies in the data bases and on the uncertainty in model estimates. Sensitivity analyses can aid in determining the effect of inaccuracies of variations or uncertainties in the data bases on the range of likely concentrations. Such information may be used to determine source impact and to evaluate control strategies. Where possible, information from such sensitivity analyses should be made available to the decision-maker with an appropriate interpretation of the effect on the critical concentrations.

10.2 Recommendations

a. No specific guidance on the consideration of model uncertainty in decision-making is being given at this time. There is incomplete technical information on measures of model uncertainty that are most relevant to the decision-maker. It is not clear how a decisionmaker could use such information, particularly given limitations of the Clean Air Act. As procedures for considering uncertainty develop and become implementable, this guidance will be changed and expanded. For the present, continued use of the ''best estimate'' is acceptable and is consistent with Clean Air Act requirements.

11.0 Regulatory Application of Models

11.1 Discussion

a. Procedures with respect to the review and analysis of air quality modeling and data analyses in support of SIP revisions, PSD permitting or other regulatory requirements need a certain amount of standardization to ensure consistency in the depth and comprehensiveness of both the review and the analysis itself. This section recommends procedures that permit some degree of standardization while at the same time allowing the flexibility needed to assure the technically best analysis for each regulatory application.

b. Dispersion model estimates, especially with the support of measured air quality data, are the preferred basis for air quality demonstrations. Nevertheless, there are instances where the performance of recommended dispersion modeling techniques, by comparison with observed air quality data, may be shown to be less than acceptable. Also, there may be no recommended modeling procedure suitable for the situation. In these instances, emission limitations may be established solely on the basis of observed air quality data as would be applied to a modeling analysis. The same care should be given to the analyses of the air quality data as would be applied to a modeling analysis.

c. The current NAAQS for SO_2 and CO are both stated in terms of a concentration not to be exceeded more than once a year. There is only an annual standard for NO_2 and a quarterly standard for Pb. The PM–10 and ozone standards permit the exceedance of a concentration on an average of not more than once a year; the convention is to average over a 3-year period.[5 86 103] This represents a change from a deterministic to a more statistical form of the standard and permits some consideration to be given to unusual circumstances. The NAAQS are subjected to extensive review and possible revision every 5 years.

d. This section discusses general requirements for concentration estimates and identifies the relationship to emission limits. The recommendations in section 11.2 apply to: (1) revisions of State Implementation Plans; (2) the review of new sources and the prevention of significant deterioration (PSD); and (3) analyses of the emissions trades (''bubbles'').

11.2 Recommendations

11.2.1 Analysis Requirements

a. Every effort should be made by the Regional Office to meet with all parties involved in either a SIP revision or a PSD permit application prior to the start of any work on such a project. During this meeting, a protocol should be established between the preparing and reviewing parties to define the procedures to be followed, the data to be collected, the model to be used, and the analysis of the source and concentration data. An example of requirements for such an effort is contained in the Air Quality Analysis Checklist included here as appendix C. This checklist suggests the level of detail required to assess the air quality resulting from the proposed action. Special cases may require additional data collection or analysis and this should be determined and agreed upon at this preapplication meeting. The protocol should be written and agreed upon by the parties concerned, although a formal legal document is not intended. Changes in such a protocol are often required as the data collection and analysis progresses. However, the protocol establishes a common understanding of the requirements.

b. An air quality analysis should begin with a screening model to determine the potential of the proposed source or control strategy to violate the PSD increment or NAAQS. It is recommended that the screening techniques found in ''Screening Procedures for Estimating the Air Quality Impact of Stationary Sources''[18] be used for point source analyses. Screening procedures for area source analysis are discussed in ''Applying Atmospheric Simulation Models to Air Quality Maintenance Areas''.[87] For mobile source impact assessments the ''Guideline for Modeling Carbon Monoxide from Roadway Intersections''[34] is available.

c. If the concentration estimates from screening techniques indicate that the PSD increment or NAAQS may be approached or exceeded, then a more refined modeling analysis is appropriate and the model user should select a model according to recommendations in sections 4.0–8.0. In some instances, no refined technique may be specified in this guide for the situation. The model user is then encouraged to submit a model developed specifically for the case at hand. If that is not possible, a screening technique may supply the needed results.

d. Regional Offices should require permit applicants to incorporate the pollutant contributions of all sources into their analysis. Where necessary this may include emissions associated with growth in the area of impact of the new or modified source's impact. PSD air quality assessments should consider the amount of the allowable air quality increment that has already been granted to any other sources. Therefore, the most recent source applicant should model the existing or permitted sources in addition to the one currently under consideration. This would permit the use of newly acquired data or improved modeling techniques if such have become available since the last source was permitted. When remodeling, the worst case used in the previous modeling analysis should be one set of conditions modeled in the new analysis. All sources should be modeled for each set of meteorological conditions selected and for all receptor sites used in the previous applications as well as new sites specific to the new source.

11.2.2 Use of Measured Data in Lieu of Model Estimates

a. Modeling is the preferred method for determining emission limitations for both new and existing sources. When a preferred model is available, model results alone (including background) are sufficient. Monitoring will normally not be accepted as the sole basis for emission limitation determination in flat terrain areas. In some instances when the modeling technique available is only a screening technique, the addition of air quality data to the analysis may lend credence to model results.

b. There are circumstances where there is no applicable model, and measured data may need to be used. Examples of such situations are: (1) complex terrain locations; (2) land/water interface areas; and (3) urban locations with a large fraction of particulate emissions from nontraditional sources. However, only in the case of an existing source should monitoring data alone be a basis for emission limits. In addition, the following items should be considered prior to the acceptance of the measured data:

i. Does a monitoring network exist for the pollutants and averaging times of concern?

ii. Has the monitoring network been designed to locate points of maximum concentration?

iii. Do the monitoring network and the data reduction and storage procedures meet EPA monitoring and quality assurance requirements?

iv. Do the data set and the analysis allow impact of the most important individual sources to be identified if more than one source or emission point is involved?

v. Is at least one full year of valid ambient data available?

vi. Can it be demonstrated through the comparison of monitored data with model results that available models are not applicable?

c. The number of monitors required is a function of the problem being considered. The source configuration, terrain configuration, and meteorological variations all have an impact on number and placement of monitors. Decisions can only be made on a case-by-case basis. The Interim Procedures for Evaluating Air Quality Models[15] should be used in establishing criteria for demonstrating that a model is not applicable.

d. Sources should obtain approval from the Regional Office or reviewing authority for the monitoring network prior to the start of monitoring. A monitoring protocol agreed to by all concerned parties is highly desirable. The design of the network, the number, type and location of the monitors, the sampling period, averaging time as well as the need for meteorological monitoring or the use of mobile sampling or plume tracking techniques, should all be specified in the protocol and agreed upon prior to start-up of the network.

11.2.3 Emission Limits

11.2.3.1 Design Concentrations

a. Emission limits should be based on concentration estimates for the averaging time that results in the most stringent control requirements. The concentration used in specifying emission limits is called the design value or design concentration and is a sum of the concentration contributed by the source and the background concentration.

b. To determine the averaging time for the design value, the most restrictive National Ambient Air Quality Standard (NAAQS) should be identified by calculating, for each averaging time, the ratio of the applicable NAAQS (S)− background (B) to the predicted concentration (P) (i.e., (S−B)/P). The averaging time with the lowest ratio identifies the most restrictive standard. If the annual average is the most restrictive, the highest estimated annual average concentration from one or a number of years of data is the design value. When short term standards are most restrictive, it may be necessary to consider a broader range of concentrations than the highest value. For example, for pollutants such as SO_2, the highest, second-highest concentration is the design value. For pollutants with statistically based NAAQS, the design value is found by determining the more restrictive of: (1) the short-term concentration that is not expected to be exceeded more than once per year over the period specified in the standard, or (2) the long-term concentration that is not expected to exceed the long-term NAAQS. Determination of design values for PM–10 is presented in more detail in the ''PM–10 SIP Development Guideline''.[108]

c. When the highest, second-highest concentration is used in assessing potential violations of a short term NAAQS, criteria that are identified in ''Guideline for Interpretation of Air Quality Standards''[88] should be followed. This guidance specifies that a violation of a short term standard occurs at a site when the standard is exceeded a second time. Thus, emission limits that protect standards for averaging times of 24 hours or less are appropriately based on the highest, second-highest estimated concentration plus a background concentration which can reasonably be assumed to occur with the concentration.

11.2.3.2 NAAQS Analyses for New or Modified Sources

a. For new or modified sources predicted to have a significant ambient impact[63] and to be located in areas designated attainment or unclassifiable for the SO_2, Pb, NO_2, or CO NAAQS, the demonstration as to whether the source will cause or contribute to an air quality violation should be based on: (1) the highest estimated annual average concentration determined from annual averages of individual years; or (2) the highest, second-highest estimated concentration for averaging times of 24-hours or less; and (3) the significance of the spatial and temporal contribution to any modeled violation. For Pb, the highest estimated concentration based on an individual calendar quarter averaging period should be used. Background concentrations should be added to the estimated impact of the source. The most restrictive standard should be used in all cases to assess the threat of an air quality violation. For new or modified sources predicted to have a significant ambient impact[63] in areas designated attainment or unclassifiable for the PM–10 NAAQS, the demonstration of whether or not the source will cause or contribute to an air quality violation should be based on sufficient data to show whether: (1) the projected 24-hour average concentrations will exceed the 24-hour NAAQS more than once per year, on average; (2) the expected (i.e., average) annual mean concentration will exceed the annual NAAQS; and (3) the source contributes significantly, in a temporal and spatial sense, to any modeled violation.

11.2.3.3 PSD Air Quality Increments and Impacts

a. The allowable PSD increments for criteria pollutants are established by regulation and cited in §51.166. These maximum allowable increases in pollutant concentrations may be exceeded once per year at each site, except for the annual increment that may not be exceeded. The highest, second-highest increase in estimated concentrations for the short term averages as determined by a model should be less than or equal to the permitted increment. The modeled annual averages should not exceed the increment.

b. Screening techniques defined in sections 4.0 and 5.0 can sometimes be used to estimate short term incremental concentrations for the first new source that triggers the baseline in a given area. However, when multiple increment-consuming sources are involved in the calculation, the use of a refined model with at least 1 year of on-site or 5 years of off-site NWS data is normally required. In such cases, sequential modeling must demonstrate that the allowable increments are not exceeded temporally and spatially, i.e., for all receptors for each time period throughout the year(s) (time period means the appropriate PSD averaging time, e.g., 3-hour, 24-hour, etc.).

c. The PSD regulations require an estimation of the SO_2, particulate matter, and NO_2 impact on any Class I area. Normally, Gaussian models should not be applied at distances greater than can be accommodated by the steady state assumptions inherent in such models. The maximum distance for refined Gaussian model application for regulatory purposes is generally considered to be 50km. Beyond the 50km range, screening techniques may be used to determine if more refined modeling is needed. If refined models are needed, long range transport models should be considered in accordance with section 7.2.6. As previously noted in sections 3.0 and 7.0, the need to involve the Federal Land Manager in decisions on potential air quality

impacts, particularly in relation to PSD Class I areas, cannot be overemphasized.

11.2.3.4 Emissions Trading Policy (Bubbles)

a. EPA's final Emissions Trading Policy, commonly referred to as the ''bubble policy,'' was published in the FEDERAL REGISTER in 1986.[89] Principles contained in the policy should be used to evaluate ambient impacts of emission trading activities.

b. Emission increases and decreases within the bubble should result in ambient air quality equivalence. Two levels of analysis are defined for establishing this equivalence. In a Level I analysis the source configuration and setting must meet certain limitations (defined in the policy) that ensure ambient equivalence; no modeling is required. In a Level II analysis a modeling demonstration of ambient equivalence is required but only the sources involved in the emissions trade are modeled. The resulting ambient estimates of net increases/decreases are compared to a set of significance levels to determine if the bubble can be approved. A Level II analysis requires the use of a refined model and the most recent readily available full year of representative meteorological data. Sequential modeling must demonstrate that the significance levels are met temporally and spatially, i.e., for all receptors for each time period throughout the year (time period means the appropriate NAAQS averaging time, e.g., 3-hour, 24-hour, etc.).

c. For those bubbles that cannot meet the Level I or Level II requirements, the Emissions Trading Policy allows for a Level III analysis. A Level III analysis, from a modeling standpoint, is generally equivalent to the requirements for a standard SIP revision where all sources (and background) are considered and the estimates are compared to the NAAQS as in section 11.2.3.2.

d. The Emissions Trading Policy allows States to adopt generic regulations for processing bubbles. The modeling procedures recommended in the Guideline apply to such generic regulations. However, an added requirement is that the modeling procedures contained in any generic regulation must be replicable such that there is no doubt as to how each individual bubble will be modeled. In general this means that the models, the data bases and the procedures for applying the model must be defined in the regulation. The consequences of the replicability requirement are that bubbles for sources located in complex terrain and certain industrial sources where judgments must be made on source characterization cannot be handled generically.

12.0 REFERENCES[g h]

1. Code of Federal Regulations (Title 40, part 51): Protection of the Environment; Requirements for Preparation, Adoption, and Submittal of Implementation Plans.

2. Environmental Protection Agency, 1977. Guidelines for the Regional Evaluation of State and Local New Source Review Program. EPA Publication No. EPA–450/2–77–027. U.S. Environmental Protection Agency, Research Triangle Park, NC. (NTIS No. PB–275053)

3. Environmental Protection Agency, 1980. Prevention of Significant Deterioration Workshop Manual. EPA Publication No. EPA–450/2–80–081. U.S. Environmental Protection Agency, Research Triangle Park, NC. (NTIS No. PB 81–136459)

4. Environmental Protection Agency, 1981. Guideline for Fluid Modeling of Atmospheric Diffusion. EPA Publication No. EPA–600/8–81–009. U.S. Environmental Protection Agency, Research Triangle Park, NC. (NTIS No. PB 81–201410)

5. Code of Federal Regulations (Title 40, part 50): Protection of the Environment; National Primary and Secondary Ambient Air Quality Standards.

6. Environmental Protection Agency, 1988. Model Clearinghouse: Operational Plan (Revised). Staff Report. U.S. Environmental Protection Agency, Research Triangle Park, NC. (Docket No. A–88–04, II–J–1)

7. Environmental Protection Agency, 1980. Guidelines on Air Quality Models. FEDERAL REGISTER, 45: 20157–20158.

8. Londergan, R.J., D.H. Minott, D.J. Wackter, T. Kincaid and D. Bonitata, 1982. Evaluation of Rural Air Quality Simulation Models. EPA Publication No. EPA–450/4–82–020. U.S. Environmental Protection Agency, Research Triangle Park, NC. (NTIS No. PB 83–182758)

9. Londergan, R.J., D.H. Minott, D.J. Wackter and R.R. Fizz, 1983. Evaluation of Urban Air Quality Simulation Models. EPA Publication No. EPA–450/4–83–020. U.S. Environmental Protection Agency, Research Triangle Park, NC. (NTIS No. PB 84–241173).

[g] Documents not available in the open literature or from the National Technical Information Service (NTIS) have been placed in Docket No. A–80–46 or A–88–04. Item Numbers for documents placed in the Docket are shown at the end of the reference.

[h] Some EPA references, e.g., model user's guides, etc., are periodically revised. Users are referred to the SCRAM BBS[19] to download updates or addenda; see section A.0 of this appendix.

[i] The documents listed here are major sources of supplemental information on the theory and application of mathematical air quality models.

10. Londergan, R.J. and D.J. Wackter, 1984. Evaluation of Complex Terrain Air Quality Simulation Models. EPA Publication No. EPA–450/4–84–017. U.S. Environmental Protection Agency, Research Triangle Park, NC. (NTIS No. PB 85–119485).

11. Fox, D.G., 1981. Judging Air Quality Model Performance. Bulletin of the American Meteorological Society, 62(5): 599–609.

12. American Meteorological Society, 1983. Synthesis of the Rural Model Reviews. EPA Publication No. EPA–600/3–83–108. U.S. Environmental Protection Agency, Research Triangle Park, NC. (NTIS No. PB 84–121037)

13. American Meteorological Society, 1984. Review of the Attributes and Performance of Six Urban Diffusion Models. EPA Publication No. EPA–600/S3–84–089. U.S. Environmental Protection Agency, Research Triangle Park, NC. (NTIS No.PB 84–236850)

14. White, F.D.(Ed.), J.K.S. Ching, R.L. Dennis and W.H. Snyder, 1985. Summary of Complex Terrain Model Evaluation. EPA Publication No. EPA–600/3–85–060. U.S. Environmental Protection Agency, Research Triangle Park, NC. (NTIS No. PB 85–236891)

15. Environmental Protection Agency, 1984. Interim Procedures for Evaluating Air Quality Models (Revised). EPA Publication No. EPA–450/4–84–023. U.S. Environmental Protection Agency, Research Triangle Park, NC. (NTIS No. PB 85–106060)

16. Environmental Protection Agency, 1985. Interim Procedures for Evaluating Air Quality Models: Experience with Implementation. EPA Publication No. EPA–450/4–85–006. U.S. Environmental Protection Agency, Research Triangle Park, NC. (NTIS No. PB 85–242477)

17. Environmental Protection Agency, 1992. Protocol for Determining the Best Performing Model. EPA Publication No. EPA–454/R–92–025. U.S. Environmental Protection Agency, Research Triangle Park, NC.

18. Environmental Protection Agency, 1992. Screening Procedures for Estimating the Air Quality Impact of Stationary Sources, Revised. EPA Publication No. EPA–454/R–92–019. U.S. Environmental Protection Agency, Research Triangle Park, NC.

19. Environmental Protection Agency, 1989. Support Center for Regulatory Air Models Bulletin Board System (SCRAM BBS). Source Receptor Analysis Branch, Research Triangle Park, NC. (Docket Nos. A–88–04, II–J–4a and b)

20. Environmental Protection Agency, 1995. SCREEN3 User's Guide. EPA Publication No. EPA–454/B–95–004. U.S. Environmental Protection Agency, Research Triangle Park, NC. (NTIS No. PB 95–222766)

21. Environmental Protection Agency, 1987. EPA Complex Terrain Model Development: Final Report. EPA Publication No. EPA–600/3–88–006. U.S. Environmental Protection Agency, Research Triangle Park, NC. (NTIS No. PB 88–162110)

22. Perry, S.G., D.J. Burns, L.H. Adams, R.J. Paine, M.G. Dennis, M.T. Mills, D.J. Strimaitis, R.J. Yamartino and E.M. Insley, 1989. User's Guide to the Complex Terrain Dispersion Model Plus Algorithms for Unstable Situations (CTDMPLUS) Volume 1; Model Description and User Instructions. EPA Publication No. EPA–600/8–89–041. U.S. Environmental Protection Agency, Research Triangle Park, NC. (NTIS No. PB 89–181424)

23. Mills, M.T., R.J. Paine, E.A. Insley and B.A. Egan, 1987. The Complex Terrain Dispersion Model Terrain Preprocessor System—User's Guide and Program Description. EPA Publication No. EPA–600/8–88–003. U.S. Environmental Protection Agency, Research Triangle Park, NC. (NTIS No. PB 88–162094)

24. Paine, R.J., 1987. User's Guide to the CTDM Meteorological Preprocessor Program. EPA Publication No. EPA–600/8–88–004. U.S. Environmental Protection Agency, Research Triangle Park, NC. (NTIS No. PB 88–162102)

25. Perry, S.G., D.J. Burns and A.J. Cimorelli, 1990. User's Guide to CTDMPLUS: Volume 2. The Screening Mode (CTSCREEN). EPA Publication No. EPA–600/8–90–087. U.S. Environmental Protection Agency, Research Triangle Park, NC. (NTIS No. PB 91–136564)

26. Burt, E.W., 1977. Valley Model User's Guide. EPA Publication No. EPA–450/2–77–018. U.S. Environmental Protection Agency, Research Triangle Park, NC. (NTIS No. PB–274054)

27. Bjorklund, J.R. and J.F. Bowers, 1982. User's Instructions for the SHORTZ and LONGZ Computer Programs, Volumes I and II. EPA Publication No. EPA–903/9–82–004a and b. U.S. Environmental Protection Agency Region III, Philadelphia, PA. (NTIS Nos. PB 83–146092 and PB 83–146100)

28. Environmental Protection Agency, 1990. User's Guide for the Urban Airshed Model, Volume I–VIII. EPA Publication Nos. EPA–450/4–90–007a–c, d(R), e–g; EPA–454/B–93–004, respectively. U.S. Environmental Protection Agency, Research Triangle Park, NC. (NTIS Nos. PB 91–131227, PB 91–131235, PB 91–131243, PB 93–122380, PB 91–131268, PB 92–145382, and PB 92–224849, respectively, for Vols. I–VII)

29. Environmental Protection Agency, 1991. Guideline for Regulatory Application of the Urban Airshed Model. EPA Publication No. EPA–450/4–91–013 U.S. Environmental Protection Agency, Research Triangle Park, NC. (NTIS No. PB 92–108760/AS)

30. Environmental Protection Agency, 1989. Procedures for Applying City-Specific EKMA (Empirical Kinetic Modeling Approach). EPA Publication No. EPA–450/4–89–012. U.S. Environmental Protection Agency, Research Triangle Park, NC. (NTIS No. PB 90–256777)

31. Environmental Protection Agency, 1989. User's Manual for OZIPM–4 (Ozone Isopleth Plotting with Optional Mechanisms), Volumes 1 and 2. EPA Publication Nos. EPA–450/

4–89–009a and b. U.S. Environmental Protection Agency, Research Triangle Park, NC. (NTIS Nos. PB 90–261488 and PB 90–255399)

32. Environmental Protection Agency, 1988. A PC Based System for Generating EKMA Input Files. EPA Publication No. EPA–450/4–88–016. U.S. Environmental Protection Agency, Research Triangle Park, NC. (NTIS No. PB 90–255407)

33. Meyer, Jr., E.L. and K.A. Baugues, 1987. Consideration of Transported Ozone and Precursors and Their Use in EKMA. EPA Publication No. EPA–450/4–89–010. U.S. Environmental Protection Agency, Research Triangle Park, NC. (NTIS No. PB 90–255415)

34. Environmental Protection Agency, 1992. Guideline for Modeling Carbon Monoxide from Roadway Intersections. EPA Publication No. EPA–454/R–92–005. U.S. Environmental Protection Agency, Research Triangle Park, NC. (NTIS No. PB 93–210391)

35. Environmental Protection Agency, 1992. User's Guide for CAL3QHC Version 2: A Modeling Methodology for Predicting Pollutant Concentrations near Roadway Intersections. EPA Publication No. EPA–454/R–92–006. U.S. Environmental Protection Agency, Research Triangle Park, NC. (NTIS No. PB 93–210250)

36. Chu, S.H. and E.L. Meyer, 1991. Use of Ambient Ratios to Estimate Impact of NO_x Sources on Annual NO_2 Concentrations. Proceedings, 84th Annual Meeting & Exhibition of the Air & Waste Management Association, Vancouver, B.C.; 16–21 June 1991. (16 pp.) (Docket No. A–92–65, II-A–9)

37. U.S. Department of Housing and Urban Development, 1980. Air Quality Considerations in Residential Planning. U.S. Superintendent of Documents, Washington, DC. (GPO Order Nos. 023–000–00577–8, 023–000–00576–0, 023–000–00575–1)

38. Environmental Protection Agency, 1981. Receptor Model Technical Series. Volume I: Overview of Receptor Model Application to Particulate Source Apportionment. EPA Publication No. EPA–450/4–81–016a (NTIS No. PB 82–139429); Volume II: Chemical Mass Balance. EPA Publication No. EPA–450/4–81–016b (NTIS No. PB 82–187345); Volume III (Revised): CMB User's Manual (Version 7.0). EPA Publication No. EPA–450/4–90–004 (NTIS No. PB 90–185067); Volume IV: Technical Considerations In Source Apportionment By Particle Identification. EPA Publication No. EPA–450/4–83–018 (NTIS No. PB 84–103340); Volume V: Source Apportionment Techniques and Considerations in Combining their Use. EPA Publication No. EPA–450/4–84–020 (NTIS No. PB 85–111524); Volume VI: A Guide To The Use of Factor Analysis and Multiple Regression (FA/MR) Techniques in Source Apportionment. EPA Publication No. EPA–450/4–85–007 (NTIS No. PB 86–107638). U.S. Environmental Protection Agency, Research Triangle Park, NC.

39. Pace, T.G., 1982. The Role of Receptor Models for Revised Particulate Matter Standards. A Specialty Conference on: Receptor Models Applied to Contemporary Pollution Problems. Air Pollution Control Association, Pittsburgh, PA; pp. 18–28. (Docket No. A–80–46, II–P–10)

40. Environmental Protection Agency, 1978. Supplementary Guidelines for Lead Implementation Plans. EPA Publication No. EPA–450/2–78–038. U.S. Environmental Protection Agency, Research Triangle Park, NC. (NTIS No. PB 82–232737)

41. Environmental Protection Agency, 1983. Updated Information on Approval and Promulgation of Lead Implementation Plans (DRAFT). U.S. Environmental Protection Agency, Research Triangle Park, NC. (Docket No. A–80–46, II-B–38)

42. Environmental Protection Agency, 1979. Protecting Visibility: An EPA Report to Congress. EPA Publication No. EPA–450/5–79–008. U.S. Environmental Protection Agency, Research Triangle Park, NC. (NTIS No. PB 80–220320)

43. Environmental Protection Agency, 1992. Workbook for Plume Visual Impact Screening and Analysis (Revised). EPA Publication No. EPA–454/R–92–023. U.S. Environmental Protection Agency, Research Triangle Park, NC.

44. Seigneur C., A.B. Hudischewskyj and R.W. Bergstrom, 1982. Evaluation of the EPA PLUVUE Model and the ERT Visibility Model Based on the 1979 VISTTA Data Base. EPA Publication No. EPA–450/4–82–008. U.S. Environmental Protection Agency, Research Triangle Park, NC. (NTIS No. PB 83–164723)

45. White, W.H., C. Seigneur, D.W. Heinold, M.W. Eltgroth, L.W. Richards, P.T. Roberts, P.S. Bhardwaja, W.D. Conner and W.E. Wilson, Jr., 1985. Predicting the Visibility of Chimney Plumes: An Intercomparison of Four Models with Observations at a Well-Controlled Power Plant. Atmospheric Environment, 19(3): 515–528.

46. Environmental Protection Agency, 1985. Guideline for Determination of Good Engineering Practice Stack Height (Technical Support Document for the Stack Height Regulations), Revised. EPA Publication No. EPA–450/4–80–023R. U.S. Environmental Protection Agency, Research Triangle Park, NC. (NTIS No. PB 85–225241)

47. Environmental Protection Agency, 1981. Guideline for Use of Fluid Modeling to Determine Good Engineering Practice (GEP) Stack Height. EPA Publication No. EPA–450/4–81–003. U.S. Environmental Protection Agency, Research Triangle Park, NC. (NTIS No. PB 82–145327)

48. Lawson, Jr., R.E. and W.H. Snyder, 1983. Determination of Good Engineering Practice Stack Height: A Demonstration Study for a Power Plant. EPA Publication No. EPA–600/3–83–024. U.S. Environmental Protection Agency, Research Triangle Park, NC. (NTIS No. PB 83–207407)

49. Snyder, W.H. and R.E. Lawson, Jr., 1985. Fluid Modeling Demonstration of Good Engineering-Practice Stack Height in Complex Terrain. EPA Publication No. EPA–600/3–85–022. U.S. Environmental Protection Agency, Research Triangle Park, NC. (NTIS No. PB 85–203107)

50. Turner, D.B., 1969. Workbook of Atmospheric Dispersion Estimates. PHS Publication No. 999–AP–26. U.S. Department of Health, Education and Welfare, Public Health Service, Cincinnati, OH. (NTIS No. PB–191482)

51. McElroy, J.L. and F. Pooler, Jr., 1968. St. Louis Dispersion Study, Volume II—Analysis. National Air Pollution Control Administration Publication No. AP–53, U.S. Department of Health, Education and Welfare, Public Health Service, Arlington, VA. (NTIS No. PB–190255)

52. Irwin, J.S., 1983. Estimating Plume Dispersion—A Comparison of Several Sigma Schemes. Journal of Climate and Applied Meteorology, 22: 92–114.

53. Briggs, G.A. and F.S. Binkowski, 1985. Research on Diffusion in Atmospheric Boundary Layers: A Position Paper on Status and Needs. EPA Publication No. EPA–600/3–25–072. U.S. Environmental Protection Agency, Research Triangle Park, NC. (NTIS No. PB 86–122587)

54. Pasquill, F., 1976. Atmospheric Dispersion Parameters in Gaussian Plume Modeling, Part II. Possible Requirements for Change in the Turner Workbook Values. EPA Publication No. EPA–600/4–76–030b. U.S. Environmental Protection Agency, Research Triangle Park, NC. (NTIS No. PB–258036/3BA)

55. Turner, D.B., 1964. A Diffusion Model for an Urban Area. Journal of Applied Meteorology, 3(1): 83–91.

56. Briggs, G.A., 1975. Plume Rise Predictions. Chapter 3 in Lectures on Air Pollution and Environmental Impact Analyses. American Meteorological Society, Boston, MA; pp. 59–111.

57. Hanna, S.R., G.A. Briggs and R.P. Hosker, Jr., 1982. Plume Rise. Chapter 2 in Handbook on Atmospheric Diffusion. Technical Information Center, U.S. Department of Energy, Washington, DC; pp. 11–24. DOE/TIC–11223 (DE 82002045)

58. Environmental Protection Agency, 1995. User's Guide for the Industrial Source Complex (ISC3) Dispersion Models, Volumes 1 and 2. EPA Publication Nos. EPA–454/B–95–003a & b. U.S. Environmental Protection Agency, Research Triangle Park, NC. (NTIS Nos. PB 95–222741 and PB 95–222758, respectively)

59. Irwin, J.S., 1978. Proposed Criteria for Selection of Urban Versus Rural Dispersion Coefficients. (Draft Staff Report). Meteorology and Assessment Division, U.S. Environmental Protection Agency, Research Triangle Park, NC. (Docket No. A–80–46, II–B–8)

60. Auer, Jr., A.H., 1978. Correlation of Land Use and Cover with Meteorological Anomalies. Journal of Applied Meteorology, 17(5): 636–643.

61. Brier, G.W., 1973. Validity of the Air Quality Display Model Calibration Procedure. EPA Publication No. EPA–R4–73–017. U.S. Environmental Protection Agency, Research Triangle Park, NC. (NTIS No. PB–218716)

62. Environmental Protection Agency, 1985 and ff. Compilation of Air Pollutant Emission Factors, Volume I: Stationary Point and Area Sources (Fourth Edition; GPO Stock No. 055–000–00251–7), and Supplements; Volume II: Mobile Sources (NTIS PB 87–205266) and Supplement(s). EPA Publication No. AP–42. U.S. Environmental Protection Agency, Research Triangle Park, NC.

63. Environmental Protection Agency, 1987. Ambient Air Monitoring Guidelines for Prevention of Significant Deterioration (PSD). EPA Publication No. EPA–450/4–87–007. U.S. Environmental Protection Agency, Research Triangle Park, NC. (NTIS No. PB 90–168030)

64. Landsberg, H.E. and W.C. Jacobs, 1951. Compendium of Meteorology. American Meteorological Society, Boston, MA; pp. 976–992.

65. Burton, C.S., T.E. Stoeckenius and J.P. Nordin, 1983. The Temporal Representativeness of Short-Term Meteorological Data Sets: Implications for Air Quality Impact Assessments. Systems Applications, Inc., San Rafael, CA. (Docket No. A–80–46, II–G–11)

66. Environmental Protection Agency, 1987. On-Site Meteorological Program Guidance for Regulatory Modeling Applications. EPA Publication No. EPA–450/4–87–013. U.S. Environmental Protection Agency, Research Triangle Park, NC. (NTIS No. PB 87–227542)

67. Environmental Protection Agency, 1989. Quality Assurance for Air Pollution Measurement Systems, Volume IV—Meteorological Measurements. EPA Publication No. EPA–600/4–82–060R. U.S. Environmental Protection Agency, Research Triangle Park, NC.

68. Irwin, J.S., 1980. Dispersion Estimate Suggestion ⊥8: Estimation of Pasquill Stability Categories. U.S. Environmental Protection Agency, Research Triangle Park, NC (Docket No. A–80–46, II–B–10)

69. Mitchell, Jr., A.E. and K.O. Timbre, 1979. Atmospheric Stability Class from Horizontal Wind Fluctuation. Presented at 72nd Annual Meeting of Air Pollution Control Association, Cincinnati, OH; June 24–29, 1979. (Docket No. A–80–46, II–P–9)

70. Nuclear Regulatory Commission, 1972. Meteorological Programs in Support of Nuclear Power Plants. Regulatory Guide 1.23 (DRAFT). U.S. Nuclear Regulatory Commission, Office of Standards Development, Washington, DC. (Docket No. A–80–46, II–P–11)

71. Smedman-Hogstrom, A. and V. Hogstrom, 1978. A Practical Method for Determining Wind Frequency Distributions for

the Lowest 200m from Routine Meteorological Data. Journal of Applied Meteorology, 17(7): 942–954.

72. Smith, T.B. and S.M. Howard, 1972. Methodology for Treating Diffusivity. MRI 72 FR–1030. Meteorology Research, Inc., Altadena, CA. (Docket No. A–80–46, II–P–8)

73. Environmental Protection Agency, 1984. Calms Processor (CALMPRO) User's Guide. EPA Publication No. EPA–901/9–84–001. U.S. Environmental Protection Agency, Region I, Boston, MA. (NTIS No. PB 84–229467)

74. Burton, C.S., 1981. The Role of Atmospheric Models in Regulatory Decision-Making: Summary Report. Systems Applications, Inc., San Rafael, CA. Prepared under contract No. 68–01–5845 for U.S. Environmental Protection Agency, Research Triangle Park, NC. (Docket No. A–80–46, II–M–6)

75. Environmental Protection Agency, 1981. Proceedings of the Second Conference on Air Quality Modeling, Washington, DC. U.S. Environmental Protection Agency, Research Triangle Park, NC. (Docket No. A–80–46, II–M–16)

76. Hanna, S.R., 1982. Natural Variability of Observed Hourly SO_2 and CO Concentrations in St. Louis. Atmospheric Environment, 16(6): 1435–1440.

77. Fox, D.G., 1983. Uncertainty in Air Quality Modeling. Bulletin of the American Meteorological Society, 65(1): 27–36.

78. Bowne, N.E., 1981. Validation and Performance Criteria for Air Quality Models. Appendix F in Air Quality Modeling and the Clean Air Act: Recommendations to EPA on Dispersion Modeling for Regulatory Applications. American Meteorological Society, Boston, MA; pp. 159–171. (Docket No. A–80–46, II–A–106)

79. Bowne, N.E. and R.J. Londergan, 1983. Overview, Results, and Conclusions for the EPRI Plume Model Validation and Development Project: Plains Site. EPRI EA–3074. Electric Power Research Institute, Palo Alto, CA.

80. Moore, G.E., T.E. Stoeckenius and D.A. Stewart, 1982. A Survey of Statistical Measures of Model Performance and Accuracy for Several Air Quality Models. EPA Publication No. EPA–450/4–83–001. U.S. Environmental Protection Agency, Research Triangle Park, NC. (NTIS No. PB 83–260810)

81. Rhoads, R.G., 1981. Accuracy of Air Quality Models. Staff Report. U.S. Environmental Protection Agency, Research Triangle Park, NC. (Docket No. A–80–46, II–G–6)

82. Pasquill, F., 1974. Atmospheric Diffusion, 2nd Edition. John Wiley and Sons, New York, NY; 479 pp.

83. Austin, B.S., T.E. Stoeckenius, M.C. Dudik and T.S. Stocking, 1988. User's Guide to the Expected Exceedances System. Systems Applications, Inc., San Rafael, CA. Prepared under Contract No. 68–02–4352 Option I for the U.S. Environmental Protection Agency, Research Triangle Park, NC. (Docket No. A–88–04, II–I–3)

84. Thrall, A.D., T.E. Stoeckenius and C.S. Burton, 1985. A Method for Calculating Dispersion Modeling Uncertainty Applied to the Regulation of an Emission Source. Systems Applications, Inc., San Rafael, CA. Prepared for the U.S. Environmental Protection Agency, Research Triangle Park, NC. (Docket No. A–80–46, IV–G–1)

85. Environmental Protection Agency, 1981. Plan for Evaluating Model Performance. Staff Report. U.S. Environmental Protection Agency, Research Triangle Park, NC. (Docket No. A–80–46, II–G–6)

86. Environmental Protection Agency, 1979. Guideline for the Interpretation of Ozone Air Quality Standards. EPA Publication No. EPA 450/4–79–003. U.S. Environmental Protection Agency, Research Triangle Park, NC. (NTIS No. PB–292271)

87. Environmental Protection Agency, 1974. Guidelines for Air Quality Maintenance Planning and Analysis, Volume 12: Applying Atmospheric Simulation Models to Air Quality Maintenance Areas. EPA Publication No. EPA–450/4–74–013. U.S. Environmental Protection Agency, Research Triangle Park, NC. (NTIS No. PB–237750)

88. Environmental Protection Agency, 1977. Guidelines for Interpretation of Air Quality Standards (Revised). OAQPS No. 1.2–008. U.S. Environmental Protection Agency, Research Triangle Park, NC. (NTIS No. PB 81–196420)

89. Environmental Protection Agency, 1986. Emissions Trading Policy Statement; General Principles for Creation, Banking, and Use of Emission Reduction Credits. FEDERAL REGISTER, 51: 43814–43860.

90. Environmental Research and Technology, 1987. User's Guide to the Rough Terrain Diffusion Model (RTDM), Rev. 3.20. ERT Document No. P–D535–585. Environmental Research and Technology, Inc., Concord, MA. (NTIS No. PB 88–171467)

91. Burns, D.J., S.G. Perry and A.J. Cimorelli, 1991. An Advanced Screening Model for Complex Terrain Applications. Paper presented at the 7th Joint Conference on Applications of Air Pollution Meteorology (cosponsored by the American Meteorological Society and the Air & Waste Management Association), January 13–18, 1991, New Orleans, LA.

92. Perry, S.G., 1992. CTDMPLUS: A Dispersion Model for Sources near Complex Topography. Part I: Technical Formulations. Journal of Applied Meteorology, 31(7): 633–645.

93. Paumier, J.O., S.G. Perry and D.J. Burns, 1992. CTDMPLUS: A Dispersion Model for Sources near Complex Topography. Part II: Performance Characteristics. Journal of Applied Meteorology, 31(7): 646–660.

94. Environmental Protection Agency, 1986. Evaluation of Mobile Source Air Quality Simulation Models. EPA Publication No.

EPA–450/4–86–002. U.S. Environmental Protection Agency, Research Triangle Park, NC. (NTIS No. PB 86–167293)

95. Shannon, J.D., 1987. Mobile Source Modeling Review. A report prepared under a cooperative agreement with the Environmental Protection Agency. (Docket No. A–88–04, II–J–2)

96. Environmental Protection Agency, 1991. Emission Inventory Requirements for Carbon Monoxide State Implementation Plans. EPA Publication No. EPA–450/4–91–011. U.S. Environmental Protection Agency, Research Triangle Park, NC. (NTIS No. PB 92–112150)

97. Environmental Protection Agency, 1992. Guideline for Regulatory Application of the Urban Airshed Model for Areawide Carbon Monoxide. EPA Publication No. EPA–450/4–92–011a and b. U.S. Environmental Protection Agency, Research Triangle Park, NC. (NTIS Nos. PB 92–213222 and PB 92–213230)

98. Environmental Protection Agency, 1992. Technical Support Document to Aid States with the Development of Carbon Monoxide State Implementation Plans. EPA Publication No. EPA–452/R–92–003. U.S. Environmental Protection Agency, Research Triangle Park, NC. (NTIS No. PB 92–233055)

99. Environmental Protection Agency, 1986. Evaluation of Short-Term Long-Range Transport Models, Volumes I and II. EPA Publication Nos. EPA–450/4–86–016a and b. U.S. Environmental Protection Agency, Research Triangle Park, NC. (NTIS Nos. PB 87–142337 and PB 87–142345)

100. McNider, R.T., 1987. Review of Short-Term Long-Range Models. A report prepared under a cooperative agreement with the Environmental Protection Agency. (Docket No. A–88–04, II–I–10)

101. Lamb, R.G., 1983. A Regional Scale (1,000km) Model of Photochemical Air Pollution, Part I—Theoretical Formulation, Part II—Input Processor Network Design, and Part III—Tests of Numerical Algorithms. EPA Publication Nos. EPA–600/3–83–035, EPA–600/3–84–085, and EPA–600/3–85–037. U.S. Environmental Protection Agency, Research Triangle Park, NC. (NTIS Nos. PB 83–207688, PB 84–232651, and PB 85–203818, respectively)

102. Young, J.O., M. Aissa, T.L. Boehm et al., 1989. Development of the Regional Oxidant Model, Version 2.1. EPA Publication No. EPA–600/3–89–044. U.S. Environmental Protection Agency, Research Triangle Park, NC. (NTIS No. PB 89–194252)

103. Environmental Protection Agency, 1991. The Regional Oxidant Model (ROM) User's Guide. Part 1: The ROM Preprocessors. EPA Publication No. EPA–600/8–90–083a (NTIS No. PB 91–171926); Part 2: The ROM Processor Network. EPA Publication No. EPA–600/8–90–083b (NTIS No. PB 91–171934); Part 3: The Core Model. EPA Publication No. EPA–600/8–90–083c (NTIS No. PB 91–171942). U.S. Environmental Protection Agency, Research Triangle Park, NC.

104. Chang, J.S., R.A. Brost, I.S.A. Isaksen, S. Madronich, P. Middleton, W.R. Stockwell and C.J. Waleck, 1987. A Three-Dimensional Eulerian Acid Deposition Model: Physical Concepts and Formulation. Journal of Geophysical Research, 92(D12): 14681–14700.

105. Environmental Protection Agency, 1987. Protocol for Applying and Validating the CMB. U.S. Environmental Protection Agency. EPA Publication No. EPA–450/4–87–010. U.S. Environmental Protection Agency, Research Triangle Park, NC. (NTIS No. PB 87–206496)

106. Environmental Protection Agency, 1987. Protocol for Reconciling Differences Among Receptor and Dispersion Models. EPA Publication No. EPA–450/4–87–008. U.S. Environmental Protection Agency, Research Triangle Park, NC. (NTIS No. PB 87–206504)

107. Environmental Protection Agency, 1988. Chemical Mass Balance Model Diagnostics. EPA Publication No. EPA–450/4–88–005. U.S. Environmental Protection Agency, Research Triangle Park, NC. (NTIS No. PB 88–208319)

108. Environmental Protection Agency, 1987. PM–10 SIP Development Guideline. EPA Publication No. EPA–450/2–86–001. U.S. Environmental Protection Agency, Research Triangle Park, NC. (NTIS No. PB 87–206488)

109. Environmental Protection Agency, 1987. Example Modeling to Illustrate SIP Development for The PM–10 NAAQS. EPA Publication No. EPA–450/4–87–012. U.S. Environmental Protection Agency, Research Triangle Park, NC. (NTIS No. PB 87–205191)

110. Sestak, M.L. and A.R. Riebau, 1988. SASEM Simple Approach Smoke Estimation Model. U.S. Bureau of Land Management, Technical Note 382. BLM/YA/PT–88/003 + 7000. Available from Printed Materials Distribution Section, BLM Service Center (SC–658B), Denver, CO 80225–0047. (NTIS No. PB 90–185653)

111. Environmental Protection Agency, 1992. A Modeling Protocol for Applying Mesopuff II to Long Range Transport Problems. EPA Publication No. EPA–454/R–92–021. U.S. Environmental Protection Agency, Research Triangle Park, NC.

112. DiCristofaro, D.C. and S.R. Hanna, 1989. The Offshore and Coastal Dispersion (OCD) Model, Volume I: User's Guide, Volume II: Appendices. Version 4 Prepared for Minerals Management Services by Sigma Research Corporation, Westford, MA. (Docket No. A–88–04, II–D–A–06)

113. Federal Aviation Administration, 1988. A Microcomputer Pollution Model for Civilian Airports and Air Force Bases, Model Description, Model Application and Background, and EDMS User's Guide (June 1991). Federal Aviation Administration Publication Nos. FAA–EE–88–4 and 5; FAA–EE–91–3, respectively. United States Air Force Publication Nos. ESL–TR–88–53 and 55; ESL–TR–

91–31, respectively. Federal Aviation Administration, Office of Environment and Energy, Washington, D.C. (NTIS Nos. ADA 199003, ADA 199794, and ADA 240528, respectively)

114. Environmental Protection Agency, 1992. Workbook of Screening Techniques for Assessing Impacts of Toxic Air Pollutants (Revised). EPA Publication No. EPA–454/R–92–024. U.S. Environmental Protection Agency, Research Triangle Park, NC.

115. Environmental Protection Agency, 1990. User's Guide to TSCREEN: A Model for Screening Toxic Air Pollutant Concentrations. EPA Publication No. EPA–450/4–90–013. U.S. Environmental Protection Agency, Research Triangle Park, NC. (NTIS No. PB 91–141820)

116. Environmental Protection Agency, 1989. Hazardous Waste TSDF Fugitive Particulate Matter Air Emissions Guidance Document. EPA Publication No. EPA–450/3–89–019. U.S. Environmental Protection Agency, Research Triangle Park, NC. (NTIS No. PB 90–103250)

117. Environmental Protection Agency, 1989. Procedures for Conducting Air Pathway Analyses for Superfund Applications, Volume I Applications of Air Pathway Analyses for Superfund Activities and Volume IV Procedures for Dispersion Modeling and Air Monitoring for Superfund Air Pathway Analysis, EPA–450/1–89–001 and 004. U.S. Environmental Protection Agency, Research Triangle Park, NC. (NTIS Nos. PB 89–113374 and PB 89–113382)

118. Environmental Protection Agency, 1988. Air Dispersion Modeling as Applied to Hazardous Waste Incinerator Evaluations, An Introduction For the Permit Writer. U.S. Environmental Protection Agency, Research Triangle Park, NC. (Docket No. A–88–04, II–J–10)

119. Environmental Protection Agency, 1989. U.S. EPA Office of Toxic Substances Graphical Exposure Modeling System (GEMS) User's Guide and GAMS Version 3.0 User's Guide (DRAFT). Prepared under Contract No. 68–02–0481 for the U.S. Environmental Protection Agency, Washington, D.C. (Docket No. A–88–04, II–J–5a and II–J–13)

120. Federal Emergency Management Agency, 1989. Handbook of Chemical Hazard Analysis Procedures. Available on request by writing to: Federal Emergency Management Agency, Publications Office, 500 C Street, S.W., Washington, D.C. 20472.

121. Environmental Protection Agency, 1987. Technical Guidance for Hazards Analysis: Emergency Planning for Extremely Hazardous Substances. Available on request by telephone: 1–800–535–0202.

122. Environmental Protection Agency, 1988. Superfund Exposure Assessment Manual. EPA–540/1–88–001, OSWER Directive 9285.5–1. Office of Remedial Response, Washington, D.C. 20460. (NTIS No. PB 89–135859)

123. Environmental Protection Agency, 1989. Incineration of Sewage Sludge; Technical Support Document. Office of Water Regulations and Standards, Washington, D.C. 20460. (NTIS No. PB 89–136592)

124. Environmental Protection Agency, 1989. Sludge Incineration Modeling (SIM) System User's Guide (Draft). Office of Pesticides and Toxic Substances, Exposure Evaluation Division, Washington, D.C. 20460. (NTIS No. PB 89–138762)

125. Environmental Protection Agency, 1989. Risk Assessment Guidance for Superfund. Volume I: Human Health Evaluation Manual Part A. (Interim Final). OSWER Directive 9285.7–01a. Office of Solid Waste and Emergency Response, Washington, D.C. 20460.

126. Environmental Protection Agency, 1986. User's Manual for the Human Exposure Model (HEM). EPA Publication No. EPA–450/5–86–001. Office of Air Quality Planning and Standards, Research Triangle Park, NC. 27711.

127. Environmental Protection Agency, 1992. A Tiered Modeling Approach for Assessing the Risks Due to Sources of Hazardous Air Pollutants. EPA Publication No. EPA–450/4–92–001. Environmental Protection Agency, Research Triangle Park, NC. (NTIS No. PB 92–164748)

128. Environmental Protection Agency, 1992. Toxic Modeling System Short-term (TOXST) User's Guide. EPA Publication No. EPA–450/4–92–002. Environmental Protection Agency, Research Triangle Park, NC.

129. Environmental Protection Agency, 1992. Toxic Modeling System Long-term (TOXLT) User's Guide. EPA Publication No. EPA–450/4–92–003. Environmental Protection Agency, Research Triangle Park, NC.

130. Environmental Protection Agency, 1989. User's Guide for the DEGADIS 2.1 Dense Gas Dispersion Model. EPA Publication No. EPA–450/4–89–019. U.S. Environmental Protection Agency, Research Triangle Park, NC. (NTIS No. PB 90–213893)

131. Environmental Protection Agency, 1993. Guidance on the Application of Refined Models for Air Toxics Releases. EPA Publication No. EPA–450/4–91–007. Environmental Protection Agency, Research Triangle Park, NC. (NTIS No. PB 91–190983)

132. Perry, R.H. and Chilton, C.H., 1973. *Chemical Engineers' Handbook*, Fifth Edition, McGraw-Hill Book Company, New York, NY.

133. Environmental Protection Agency, 1988. User's Guide to SDM—A Shoreline Dispersion Model. EPA Publication No. EPA–450/4–88–017. U.S. Environmental Protection Agency, Research Triangle Park, NC. (NTIS No. PB 89–164305)

134. Environmental Protection Agency, 1987. Analysis and Evaluation of Statistical

Coastal Fumigation Models. EPA Publication No. EPA–450/4–87–002. U.S. Environmental Protection Agency, Research Triangle Park, NC. (NTIS No. PB 87–175519)

135. Environmental Protection Agency, 1996. Meteorological Processor for Regulatory Models (MPRM) User's Guide. EPA Publication No. EPA–454/B–96–002. U.S. Environmental Protection Agency, Research Triangle Park, NC. (NTIS No. PB 96–180518)

136. Bowen, B.M., J.M. Dewart and A.I. Chen, 1983. Stability Class Determination: A Comparison for One Site. Proceedings, Sixth Symposium on Turbulence and Diffusion. American Meteorological Society, Boston, MA; pp. 211–214. (Docket No. A–92–65, II–A–7)

137. Environmental Protection Agency, 1993. An Evaluation of a Solar Radiation/Delta-T (SRDT) Method for Estimating Pasquill-Gifford (P–G) Stability Categories. EPA Publication No. EPA–454/R–93–055. U.S. Environmental Protection Agency, Research Triangle Park, NC. (NTIS No. PB 94–113958)

138. Environmental Protection Agency, 1993. PCRAMMET User's Guide. EPA Publication No. EPA–454/B–93–009. U.S. Environmental Protection Agency, Research Triangle Park, NC.

139. American Society of Mechanical Engineers, 1979. Recommended Guide for the Prediction of Airborne Effluents, Third Edition. American Society of Mechanical Engineers, New York, NY.

13.0 BIBLIOGRAPHY[i]

American Meteorological Society, 1971–1985. Symposia on Turbulence, Diffusion, and Air Pollution (1st–7th), Boston, MA.

American Meteorological Society, 1977–1984. Joint Conferences on Applications of Air Pollution Meteorology (1st–4th). Sponsored by the American Meteorological Society and the Air Pollution Control Association, Boston, MA.

American Meteorological Society, 1978. Accuracy of Dispersion Models. Bulletin of the American Meteorological Society, 59(8): 1025–1026.

American Meteorological Society, 1981. Air Quality Modeling and the Clean Air Act: Recommendations to EPA on Dispersion Modeling for Regulatory Applications, Boston, MA.

Briggs, G.A., 1969. Plume Rise. U.S. Atomic Energy Commission Critical Review Series, Oak Ridge National Laboratory, Oak Ridge, TN.

Dickerson, W.H. and P.H. Gudiksen, 1980. ASCOT FY 79 Program Report. Report UCRL—52899, ASCOT 80–1. Lawrence Livermore National Laboratory, Livermore, CA.

Drake, R.L. and S.M. Barrager, 1979. Mathematical Models for Atmospheric Pollutants. EPRI EA–1131. Electric Power Research Institute, Palo Alto, CA.

Environmental Protection Agency, 1978. Workbook for Comparison of Air Quality Models. EPA Publication No. EPA–450/2–78–028a and b. U.S. Environmental Protection Agency, Research Triangle Park, NC.

Fox, D.G., and J.E. Fairobent, 1981. NCAQ Panel Examines Uses and Limitations of Air Quality Models. Bulletin of the American Meteorological Society, 62(2): 218–221.

Gifford, F.A., 1976. Turbulent Diffusion Typing Schemes: A Review. Nuclear Safety, 17(1): 68–86.

Gudiksen, P.H., and M.H. Dickerson, Eds., Executive Summary: Atmospheric Studies in Complex Terrain Technical Progress Report FY–1979 Through FY–1983. Lawrence Livermore National Laboratory, Livermore, CA. (Docket Reference No. II–I–103).

Hales, J.M., 1976. Tall Stacks and the Atmospheric Environment. EPA Publication No. EPA–450/3–76–007. U.S. Environmental Protection Agency, Research Triangle Park, NC.

Hanna, S.R., G.A. Briggs, J. Deardorff, B.A. Egan, G.A. Gifford and F. Pasquill, 1977. AMS Workshop on Stability Classification Schemes And Sigma Curves—Summary of Recommendations. Bulletin of the American Meteorological Society, 58(12): 1305–1309.

Hanna, S.R., G.A. Briggs and R.P. Hosker, Jr., 1982. Handbook on Atmospheric Diffusion. Technical Information Center, U.S. Department of Energy, Washington, D.C.

Haugen, D.A., Workshop Coordinator, 1975. Lectures on Air Pollution and Environmental Impact Analyses. Sponsored by the American Meteorological Society, Boston, MA.

Hoffnagle, G.F., M.E. Smith, T.V. Crawford and T.J. Lockhart, 1981. On-site Meteorological Instrumentation Requirements to Characterize Diffusion from Point Sources—A Workshop, 15–17 January 1980, Raleigh, NC. Bulletin of the American Meteorological Society, 62(2): 255–261.

McMahon, R.A. and P.J. Denison, 1979. Empirical Atmospheric Deposition Parameters—A Survey. Atmospheric Environment, 13: 571–585.

McRae, G.J., J.A. Leone and J.H. Seinfeld, 1983. Evaluation of Chemical Reaction Mechanisms for Photochemical Smog. Part I: Mechanism Descriptions and Documentation. EPA Publication No. EPA–600/3/83–086. U.S. Environmental Protection Agency, Research Triangle Park, NC.

Pasquill, F. and F.B. Smith, 1983. Atmospheric Diffusion, 3rd Edition. Ellis Horwood Limited, Chichester, West Sussex, England, 438 pp.

Randerson, D., Ed., 1984. Atmospheric Science and Power Production. DOE/TIC

[i] The documents listed here are major sources of supplemental information on the theory and application of mathematical air quality models.

27601. Office of Scientific and Technical Information, U.S. Department of Energy, Oak Ridge, TN.

Roberts, J.J., Ed., 1977. Report to U.S. EPA of the Specialists' Conference on the EPA Modeling Guideline. U.S. Environmental Protection Agency, Research Triangle Park, NC.

Smith, M.E., Ed., 1973. Recommended Guide for the Prediction of the Dispersion of Airborne Effluents. The American Society of Mechanical Engineers, New York, NY.

Stern, A.C., Ed., 1976. Air Pollution, Third Edition, Volume I: Air Pollutants, Their Transformation and Transport. Academic Press, New York, NY.

Turner, D.B., 1979. Atmospheric Dispersion Modeling: A Critical Review. Journal of the Air Pollution Control Association, 29(5): 502–519.

Whiteman, C.D. and K.J. Allwine, 1982. Green River Ambient Model Assessment Program FY–1982 Progress Report. PNL–4520. Pacific Northwest Laboratory, Richland, WA.

14.0 Glossary of Terms

Air quality. Ambient pollutant concentrations and their temporal and spatial distribution.

Algorithm. A specific mathematical calculation procedure. A model may contain several algorithms.

Background. Ambient pollutant concentrations due to:

(1) Natural sources;

(2) Nearby sources other than the one(s) currently under consideration; and

(3) Unidentified sources.

Calibrate. An objective adjustment using measured air quality data (e.g., an adjustment based on least-squares linear regression).

Calm. For purposes of air quality modeling, calm is used to define the situation when the wind is indeterminate with regard to speed or direction.

Complex terrain. Terrain exceeding the height of the stack being modeled.

Computer code. A set of statements that comprise a computer program.

Evaluate. To appraise the performance and accuracy of a model based on a comparison of concentration estimates with observed air quality data.

Fluid modeling. Modeling conducted in a wind tunnel or water channel to quantitatively evaluate the influence of buildings and/or terrain on pollutant concentrations.

Fugitive dust. Dust discharged to the atmosphere in an unconfined flow stream such as that from unpaved roads, storage piles and heavy construction operations.

Model. A quantitative or mathematical representation or simulation which attempts to describe the characteristics or relationships of physical events.

Preferred model. A refined model that is recommended for a specific type of regulatory application.

Receptor. A location at which ambient air quality is measured or estimated.

Receptor models. Procedures that examine an ambient monitor sample of particulate matter and the conditions of its collection to infer the types or relative mix of sources impacting on it during collection.

Refined model. An analytical technique that provides a detailed treatment of physical and chemical atmospheric processes and requires detailed and precise input data. Specialized estimates are calculated that are useful for evaluating source impact relative to air quality standards and allowable increments. The estimates are more accurate than those obtained from conservative screening techniques.

Rollback. A simple model that assumes that if emissions from each source affecting a given receptor are decreased by the same percentage, ambient air quality concentrations decrease proportionately.

Screening technique. A relatively simple analysis technique to determine if a given source is likely to pose a threat to air quality. Concentration estimates from screening techniques are conservative.

Simple terrain. An area where terrain features are all lower in elevation than the top of the stack of the source.

Appendix A to Appendix W of Part 51—Summaries of Preferred Air Quality Models

Table of Contents

A.0 Introduction and Availability
A.1 Buoyant Line and Point Source Dispersion Model (BLP)
A.2 Caline3
A.3 Climatological Dispersion Model (CDM 2.0)
A.4 Gaussian-Plume Multiple Source Air Quality Algorithm (RAM)
A.5 Industrial Source Complex Model (ISC3)
A.6 Urban Airshed Model (UAM)
A.7 Offshore and Coastal Dispersion Model (OCD)
A.8 Emissions and Dispersion Modeling System (EDMS)
A.9 Complex Terrain Dispersion Model Plus Algorithms For Unstable Situations (CTDMPLUS)
A.REF References

A.0 Introduction and Availability

This appendix summarizes key features of refined air quality models preferred for specific regulatory applications. For each model, information is provided on availability, approximate cost, regulatory use,

data input, output format and options, simulation of atmospheric physics, and accuracy. These models may be used without a formal demonstration of applicability provided they satisfy the recommendations for regulatory use; not all options in the models are necessarily recommended for regulatory use.

Many of these models have been subjected to a performance evaluation using comparisons with observed air quality data. A summary of such comparisons for models contained in this appendix is included in Moore et al. (1982). Where possible, several of the models contained herein have been subjected to evaluation exercises, including (1) statistical performance tests recommended by the American Meteorological Society and (2) peer scientific reviews. The models in this appendix have been selected on the basis of the results of the model evaluations, experience with previous use, familiarity of the model to various air quality programs, and the costs and resource requirements for use.

All models and user's documentation in this appendix are available from: Computer Products, National Technical Information Service (NTIS), U.S. Department of Commerce, Springfield, VA 22161, Phone: (703) 487–4650. In addition, model codes and selected, abridged user's guides are available from the Support Center for Regulatory Air Models Bulletin Board System[19] (SCRAM BBS), telephone (919) 541–5742. The SCRAM BBS is an electronic bulletin board system designed to be user friendly and accessible from anywhere in the country. Model users with personal computers are encouraged to use the SCRAM BBS to download current model codes and text files.

A.1 Buoyant Line and Point Source Dispersion Model (BLP)

Reference

Schulman, Lloyd L. and Joseph S. Scire, 1980. Buoyant Line and Point Source (BLP) Dispersion Model User's Guide. Document P–7304B. Environmental Research and Technology, Inc., Concord, MA. (NTIS No. PB 81–164642)

Availability

The computer code is available on the Support Center for Regulatory Models Bulletin Board System and also on diskette (as PB 90–500281) from the National Technical Information Service (see section A.0).

Abstract

BLP is a Gaussian plume dispersion model designed to handle unique modeling problems associated with aluminum reduction plants, and other industrial sources where plume rise and downwash effects from stationary line sources are important.

a. Recommendations for Regulatory Use

The BLP model is appropriate for the following applications:

Aluminum reduction plants which contain buoyant, elevated line sources;

Rural areas;

Transport distances less than 50 kilometers;

Simple terrain; and

One hour to one year averaging times.

The following options should be selected for regulatory applications:

Rural (IRU=1) mixing height option;

Default (no selection) for plume rise wind shear (LSHEAR), transitional point source plume rise (LTRANS), vertical potential temperature gradient (DTHTA), vertical wind speed power law profile exponents (PEXP), maximum variation in number of stability classes per hour (IDELS), pollutant decay (DECFAC), the constant in Briggs' stable plume rise equation (CONST2), constant in Briggs' neutral plume rise equation (CONST3), convergence criterion for the line source calculations (CRIT), and maximum iterations allowed for line source calculations (MAXIT); and

Terrain option (TERAN) set equal to 0.0, 0.0, 0.0, 0.0, 0.0, 0.0

For other applications, BLP can be used if it can be demonstrated to give the same estimates as a recommended model for the same application, and will subsequently be executed in that mode.

BLP can be used on a case-by-case basis with specific options not available in a recommended model if it can be demonstrated, using the criteria in section 3.2, that the model is more appropriate for a specific application.

b. Input Requirements

Source data: point sources require stack location, elevation of stack base, physical stack height, stack inside diameter, stack gas exit velocity, stack gas exit temperature, and pollutant emission rate. Line sources require coordinates of the end points of the line, release height, emission rate, average line source width, average building width, average spacing between buildings, and average line source buoyancy parameter.

Meteorological data: hourly surface weather data from punched cards or from the preprocessor program RAMMET which provides hourly stability class, wind direction, wind speed, temperature, and mixing height.

Receptor data: locations and elevations of receptors, or location and size of receptor grid or request automatically generated receptor grid.

c. Output

Printed output (from a separate post-processor program) includes:

Total concentration or, optionally, source contribution analysis; monthly and annual frequency distributions for 1-, 3-, and 24-hour average concentrations; tables of 1-, 3-, and 24-hour average concentrations at each receptor; table of the annual (or length of run) average concentrations at each receptor;

Five highest 1-, 3-, and 24-hour average concentrations at each receptor; and

Fifty highest 1-, 3-, and 24-hour concentrations over the receptor field.

d. Type of Model

BLP is a gaussian plume model.

e. Pollutant Types

BLP may be used to model primary pollutants. This model does not treat settling and deposition.

f. Source-Receptor Relationship

BLP treats up to 50 point sources, 10 parallel line sources, and 100 receptors arbitrarily located.

User-input topographic elevation is applied for each stack and each receptor.

g. Plume Behavior

BLP uses plume rise formulas of Schulman and Scire (1980).

Vertical potential temperature gradients of 0.02 Kelvin per meter for E stability and 0.035 Kelvin per meter are used for stable plume rise calculations. An option for user input values is included.

Transitional rise is used for line sources.

Option to suppress the use of transitional plume rise for point sources is included.

The building downwash algorithm of Schulman and Scire (1980) is used.

h. Horizontal Winds

Constant, uniform (steady-state) wind is assumed for an hour.

Straight line plume transport is assumed to all downwind distances.

Wind speeds profile exponents of 0.10, 0.15, 0.20, 0.25, 0.30, and 0.30 are used for stability classes A through F, respectively. An option for user-defined values and an option to suppress the use of the wind speed profile feature are included.

i. Vertical Wind Speed

Vertical wind speed is assumed equal to zero.

j. Horizontal Dispersion

Rural dispersion coefficients are from Turner (1969), with no adjustment made for variations in surface roughness or averaging time.

Six stability classes are used.

k. Vertical Dispersion

Rural dispersion coefficients are from Turner (1969), with no adjustment made for variations in surface roughness.

Six stability classes are used.

Mixing height is accounted for with multiple reflections until the vertical plume standard deviation equals 1.6 times the mixing height; uniform mixing is assumed beyond that point.

Perfect reflection at the ground is assumed.

l. Chemical Transformation

Chemical transformations are treated using linear decay. Decay rate is input by the user.

m. Physical Removal

Physical removal is not explicitly treated.

n. Evaluation Studies

Schulman, L.L. and J.S. Scire, 1980. Buoyant Line and Point Source (BLP) Dispersion Model User's Guide, P–7304B. Environmental Research and Technology, Inc., Concord, MA.

Scire, J.S. and L.L. Schulman, 1981. Evaluation of the BLP and ISC Models with SF_6 Tracer Data and SO_2 Measurements at Aluminum Reduction Plants. APCA Specialty Conference on Dispersion Modeling for Complex Sources, St. Louis, MO.

A.2 CALINE3

Reference

Benson, Paul E., 1979. CALINE3—A Versatile Dispersion Model for Predicting Air Pollutant Levels Near Highways and Arterial Streets. Interim Report, Report Number FHWA/CA/TL–79/23. Federal Highway Administration, Washington, D.C. (NTIS No. PB 80–220841)

Availability

The CALINE3 model is available on diskette (as PB 95–502712) from NTIS. The source code and user's guide are also available on the Support Center for Regulatory Models Bulletin Board System (see section A.0).

Abstract

CALINE3 can be used to estimate the concentrations of nonreactive pollutants from highway traffic. This steady-state Gaussian model can be applied to determine air pollution concentrations at receptor locations downwind of ''at-grade,'' ''fill,'' ''bridge,'' and ''cut section'' highways located in relatively uncomplicated terrain. The model is applicable for any wind direction, highway orientation, and receptor location. The model has adjustments for averaging time and surface roughness, and can handle up to 20 links and 20 receptors. It also contains an

algorithm for deposition and settling velocity so that particulate concentrations can be predicted.

a. Recommendations for Regulatory Use

CALINE–3 is appropriate for the following applications:
Highway (line) sources;
Urban or rural areas;
Simple terrain;
Transport distances less than 50 kilometers; and
One-hour to 24-hour averaging times.

b. Input Requirements

Source data: up to 20 highway links classed as ''at-grade,'' ''fill'' ''bridge,'' or ''depressed''; coordinates of link end points; traffic volume; emission factor; source height; and mixing zone width.
Meteorological data: wind speed, wind angle (measured in degrees clockwise from the Y axis), stability class, mixing height, ambient (background to the highway) concentration of pollutant.
Receptor data: coordinates and height above ground for each receptor. c.

c. Output

Printed output includes concentration at each receptor for the specified meteorological condition.

d. Type of Model

CALINE–3 is a Gaussian plume model.

e. Pollutant Types

CALINE–3 may be used to model primary pollutants.

f. Source-Receptor Relationship

Up to 20 highway links are treated.
CALINE–3 applies user input location and emission rate for each link. User-input receptor locations are applied.

g. Plume Behavior

Plume rise is not treated.

h. Horizontal Winds

User-input hourly wind speed and direction are applied.
Constant, uniform (steady-state) wind is assumed for an hour.

i. Vertical Wind Speed

Vertical wind speed is assumed equal to zero.

j. Horizontal Dispersion

Six stability classes are used.
Rural dispersion coefficients from Turner (1969) are used, with adjustment for roughness length and averaging time.
Initial traffic-induced dispersion is handled implicitly by plume size parameters.

k. Vertical Dispersion

Six stability classes are used.
Empirical dispersion coefficients from Benson (1979) are used including an adjustment for roughness length.
Initial traffic-induced dispersion is handled implicitly by plume size parameters.
Adjustment for averaging time is included.

l. Chemical Transformation

Not treated.

m. Physical Removal

Optional deposition calculations are included.

n. Evaluation Studies

Bemis, G.R. et al., 1977. Air Pollution and Roadway Location, Design, and Operation—Project Overview. FHWA–CA–TL–7080–77–25, Federal Highway Administration, Washington, D.C.
Cadle, S.H. et al., 1976. Results of the General Motors Sulfate Dispersion Experiment, GMR–2107. General Motors Research Laboratories, Warren, MI.
Dabberdt, W.F., 1975. Studies of Air Quality on and Near Highways, Project 2761. Stanford Research Institute, Menlo Park, CA.

A.3 Climatological Dispersion Model (CDM 2.0)

Reference

Irwin, J.S., T. Chico and J. Catalano, 1985. CDM 2.0—Climatological Dispersion Model—User's Guide. U.S. Environmental Protection Agency, Research Triangle Park, NC. (NTIS No. PB 86–136546)

Availability

The source code and user's guide is available on the Support Center for Regulatory Models Bulletin Board System. The computer code is also available on diskette (as PB 90–500406) from the National Technical Information Service (see section A.0).

Abstract

CDM is a climatological steady-state Gaussian plume model for determining long-term (seasonal or annual) arithmetic average pollutant concentrations at any ground-level receptor in an urban area.

a. Recommendations for Regulatory Use

CDM is appropriate for the following applications:
Point and area sources;
Urban areas;
Flat terrain;

Transport distances less than 50 kilometers;

Long term averages over one month to one year or longer.

The following option should be selected for regulatory applications:

Set the regulatory ''default option'' (NDEF=1) which automatically selects stack tip downwash, final plume rise, buoyancy-induced dispersion (BID), and the appropriate wind profile exponents.

Enter ''0'' for pollutant half-life for all pollutants except for SO_2 in an urban setting. This entry results in no decay (infinite half-life) being calculated. For SO_2 in an urban setting, the pollutant half-life (in hours) should be set to 4.0.

b. Input Requirements

Source data: location, average emissions rates and heights of emissions for point and area sources. Point source data requirements also include stack gas temperature, stack gas exit velocity, and stack inside diameter for plume rise calculations for point sources.

Meteorological data: stability wind rose (STAR deck day/night version), average mixing height and wind speed in each stability category, and average air temperature.

Receptor data: cartesian coordinates of each receptor.

c. Output

Printed output includes:

Average concentrations for the period of the stability wind rose data (arithmetic mean only) at each receptor, and

Optional point and area concentration rose for each receptor.

d. Type of Model

CDM is a climatological Gaussian plume model.

e. Pollutant Types

CDM may be used to model primary pollutants. Settling and deposition are not treated.

f. Source-Receptor Relationship

CDM applies user-specified locations for all point sources and receptors.

Area sources are input as multiples of a user-defined unit area source grid size.

User specified release heights are applied for individual point sources and the area source grid.

Actual separation between each source-receptor pair is used.

The user may select a single height at or above ground level that applies to all receptors.

No terrain differences between source and receptor are treated.

g. Plume Behavior

CDM uses Briggs (1969, 1971, 1975) plume rise equations. Optionally a plume rise-wind speed product may be input for each point source.

Stack tip downwash equation from Briggs (1974) is preferred for regulatory use. The Bjorklund and Bowers (1982) equation is also included.

No plume rise is calculated for area sources.

Does not treat fumigation or building downwash.

h. Horizontal Winds

Wind data are input as a stability wind rose (joint frequency distribution of 16 wind directions, 6 wind classes, and 5 stability classes).

Wind speed profile exponents for the urban case (Irwin, 1979; EPA, 1980) are used, assuming the anemometer height is at 10.0 meters.

i. Vertical Wind Speed

Vertical wind speed is assumed equal to zero.

j. Horizontal Dispersion

Pollutants are assumed evenly distributed across a 22.5 or 10.0 degree sector.

k. Vertical Dispersion

There are seven vertical dispersion parameter schemes, but the following is recommended for regulatory applications:

- Briggs-urban (Gifford, 1976).

Mixing height has no effect until dispersion coefficient equals 0.8 times the mixing height; uniform vertical mixing is assumed beyond that point.

Buoyancy-induced dispersion (Pasquill, 1976) is included as an option. Perfect reflection is assumed at the ground.

l. Chemical Transformation

Chemical transformations are treated using exponential decay. Half-life is input by the user.

m. Physical Removal

Physical removal is not explicitly treated.

n. Evaluation Studies

Busse, A.D. and J.R. Zimmerman, 1973. User's Guide for the Climatological Dispersion Model—Appendix E. EPA Publication No. EPA/R4–73–024. Office of Research and Development, Research Triangle Park, NC.

Irwin, J.S. and T.M. Brown, 1985. A Sensitivity Analysis of the Treatment of Area Sources by the Climatological Dispersion Model. Journal of Air Pollution Control Association, 35: 359–364.

Londergan, R., D. Minott, D. Wachter and R. Fizz, 1983. Evaluation of Urban Air Quality Simulation Models, EPA Publication No. EPA–450/4–83–020. U.S. Environmental Protection Agency, Research Triangle Park, NC.

Zimmerman, J.R., 1971. Some Preliminary Results of Modeling from the Air Pollution Study of Ankara, Turkey, Proceedings of the Second Meeting of the Expert Panel on Air Pollution Modeling, NATO Committee on the Challenges of Modern Society, Paris, France.

Zimmerman, J.R., 1972. The NATO/CCMS Air Pollution Study of St. Louis, Missouri. Presented at the Third Meeting of the Expert Panel on Air Pollution Modeling, NATO Committee on the Challenges of Modern Society, Paris, France.

A.4 Gaussian-Plume Multiple Source Air Quality Algorithm (RAM)

Reference

Turner, D.B. and J.H. Novak, 1978. User's Guide for RAM. Publication No. EPA–600/8–78–016, Vol. a and b. U.S. Environmental Protection Agency, Research Triangle Park, NC. (NTIS Nos. PB 294791 and PB 294792)

Catalano, J.A., D.B. Turner and H. Novak, 1987. User's Guide for RAM—Second Edition. U.S. Environmental Protection Agency, Research Triangle Park, NC.

Availability

The source code and user's guide is available on the Support Center for Regulatory Models Bulletin Board System. The computer code is also available on diskette (as PB 90–500315) from the National Technical Information Service (see section A.0).

Abstract

RAM is a steady-state Gaussian plume model for estimating concentrations of relatively stable pollutants, for averaging times from an hour to a day, from point and area sources in a rural or urban setting. Level terrain is assumed. Calculations are performed for each hour.

a. Recommendations for Regulatory Use

RAM is appropriate for the following applications:

Point and area sources;

Urban areas;

Flat terrain;

Transport distances less than 50 kilometers; and

One hour to one year averaging times.

The following options should be selected for regulatory applications:

Set the regulatory ''default option'' to automatically select stack tip downwash, final plume rise, buoyancy-induced dispersion (BID), the new treatment for calms, the appropriate wind profile exponents, and the appropriate value for pollutant half-life.

b. Input Requirements

Source data: point sources require location, emission rate, physical stack height, stack gas exit velocity, stack inside diameter and stack gas temperature. Area sources require location, size, emission rate, and height of emissions.

Meteorological data: hourly surface weather data from the preprocessor program RAMMET which provides hourly stability class, wind direction, wind speed, temperature, and mixing height. Actual anemometer height (a single value) is also required.

Receptor data: coordinates of each receptor. Options for automatic placement of receptors near expected concentration maxima, and a gridded receptor array are included.

c. Output

Printed output optionally includes:

One to 24-hour and annual average concentrations at each receptor,

Limited individual source contribution list, and

Highest through fifth highest concentrations at each receptor for period, with the highest and high, second-high values flagged.

d. Type of Model

RAM is a Gaussian plume model.

e. Pollutant Types

RAM may be used to model primary pollutants. Settling and deposition are not treated.

f. Source-Receptor Relationship

RAM applies user-specified locations for all point sources and receptors. Area sources are input as multiples of a user-defined unit area source grid size.

User specified stack heights are applied for individual point sources.

Up to 3 effective release heights may be specified for the area sources. Area source release heights are assumed to be appropriate for a 5 meter per second wind and to be inversely proportional to wind speed.

Actual separation between each source-receptor pair is used.

All receptors are assumed to be at the same height at or above ground level.

No terrain differences between source and receptor are accounted for.

g. Plume Behavior

RAM uses Briggs (1969, 1971, 1975) plume rise equations for final rise.

Stack tip downwash equation from Briggs (1974) is used.

A user supplied fraction of the area source height is treated as the physical height. The

remainder is assumed to be plume rise for a 5 meter per second wind speed, and to be inversely proportional to wind speed.

Fumigation and building downwash are not treated.

h. Horizontal Winds

Constant, uniform (steady state) wind is assumed for an hour.

Straight line plume transport is assumed to all downwind distances.

Separate wind speed profile exponents (Irwin, 1979; EPA, 1980) for urban cases are used.

i. Vertical Wind Speed

Vertical wind speed is assumed equal to zero.

j. Horizontal Dispersion

Urban dispersion coefficients from Briggs (Gifford, 1976) are used.

Buoyancy-induced dispersion (Pasquill, 1976) is included.

Six stability classes are used.

k. Vertical Dispersion

Urban dispersion coefficients from Briggs (Gifford, 1976) are used.

Buoyancy-induced dispersion (Pasquill, 1976) is included.

Six stability classes are used.

Mixing height is accounted for with multiple reflections until the vertical plume standard deviation equals 1.6 times the mixing height; uniform vertical mixing is assumed beyond that point.

Perfect reflection is assumed at the ground.

l. Chemical Transformation

Chemical transformations are treated using exponential decay. Half-life is input by the user.

m. Physical Removal

Physical removal is not explicitly treated.

n. Evaluation Studies

Ellis, H., P. Lou, and G. Dalzell, 1980. Comparison Study of Measured and Predicted Concentrations with the RAM Model at Two Power Plants Along Lake Erie. Second Joint Conference on Applications of Air Pollution Meteorology, New Orleans, LA.

Environmental Research and Technology, 1980. SO_2 Monitoring and RAM (Urban) Model Comparison Study in Summit County, Ohio. Document P–3618–152, Environmental Research & Technology, Inc., Concord, MA.

Guldberg, P.H. and C.W. Kern, 1978. A Comparison Validation of the RAM and PTMTP Models for Short-Term Concentrations in Two Urban Areas. Journal of Air Pollution Control Association, 28: 907–910.

Hodanbosi, R.R. and L.K. Peters, 1981. Evaluation of RAM Model for Cleveland, Ohio. Journal of Air Pollution Control Association, 31: 253–255.

Kennedy, K.H., R.D. Siegel and M.P. Steinberg, 1981. Case-Specific Evaluation of the RAM Atmospheric Dispersion Model in an Urban Area. 74th Annual Meeting of the American Institute of Chemical Engineers, New Orleans, LA.

Kummier, R.H., B. Cho, G. Roginski, R. Sinha and A. Greenburg, 1979. A Comparative Validation of the RAM and Modified SAI Models for Short Term SO_2 Concentrations in Detroit. Journal of Air Pollution Control Association, 29: 720–723.

Londergan, R.J., N.E. Bowne, D.R. Murray, H. Borenstein and J. Mangano, 1980. An Evaluation of Short-Term Air Quality Models Using Tracer Study Data. Report No. 4333, American Petroleum Institute, Washington, D.C.

Londergan, R., D. Minott, D. Wackter and R. Fizz, 1983. Evaluation of Urban Air Quality Simulation Models. EPA Publication No. EPA–450/4–83–020. U.S. Environmental Protection Agency, Research Triangle Park, NC.

Morgenstern, P., M.J. Geraghty, and A. McKnight, 1979. A Comparative Study of the RAM (Urban) and RAMR (Rural) Models for Short-term SO_2 Concentrations in Metropolitan Indianapolis. 72nd Annual Meeting of the Air Pollution Control Association, Cincinnati, OH.

Ruff, R.E., 1980. Evaluation of the RAM Using the RAPS Data Base. Contract 68–02–2770, SRI International, Menlo Park, CA.

A.5 Industrial Source Complex Model (ISC3)

Reference

Environmental Protection Agency, 1995. User's Guide for the Industrial Source Complex (ISC3) Dispersion Models, Volumes 1 and 2. EPA Publication Nos. EPA–454/B–95–003a & b. Environmental Protection Agency, Research Triangle Park, NC. (NTIS Nos. PB 95–222741 and PB 95–222758, respectively)

Availability

The model code is available on the Support Center for Regulatory Air Models Bulletin Board System. ISCST3 (as PB 96–502000) and ISCLT3 (PB 96–502018) are also available on diskette from the National Technical Information Service (see section A.0).

Abstract

The ISC3 model is a steady-state Gaussian plume model which can be used to assess pollutant concentrations from a wide variety of sources associated with an industrial source complex. This model can account for the following: settling and dry deposition of particles; downwash; area, line and volume

sources; plume rise as a function of downwind distance; separation of point sources; and limited terrain adjustment. ISC3 operates in both long-term and short-term modes.

a. Recommendations for Regulatory Use

ISC3 is appropriate for the following applications:

- Industrial source complexes;
- Rural or urban areas;
- Flat or rolling terrain;
- Transport distances less than 50 kilometers;
- 1-hour to annual averaging times; and
- Continuous toxic air emissions.

The following options should be selected for regulatory applications: For short term or long term modeling, set the regulatory ''default option''; i.e., use the keyword DFAULT, which automatically selects stack tip downwash, final plume rise, buoyancy induced dispersion (BID), the vertical potential temperature gradient, a treatment for calms, the appropriate wind profile exponents, the appropriate value for pollutant half-life, and a revised building wake effects algorithm; set the ''rural option'' (use the keyword RURAL) or ''urban option'' (use the keyword URBAN); and set the ''concentration option'' (use the keyword CONC).

b. Input Requirements

Source data: location, emission rate, physical stack height, stack gas exit velocity, stack inside diameter, and stack gas temperature. Optional inputs include source elevation, building dimensions, particle size distribution with corresponding settling velocities, and surface reflection coefficients.

Meteorological data: ISCST3 requires hourly surface weather data from the preprocessor program RAMMET, which provides hourly stability class, wind direction, wind speed, temperature, and mixing height. For ISCLT3, input includes stability wind rose (STAR deck), average afternoon mixing height, average morning mixing height, and average air temperature.

Receptor data: coordinates and optional ground elevation for each receptor.

c. Output

Printed output options include:

- Program control parameters, source data, and receptor data;
- Tables of hourly meteorological data for each specified day;
- ''N''-day average concentration or total deposition calculated at each receptor for any desired source combinations;
- Concentration or deposition values calculated for any desired source combinations at all receptors for any specified day or time period within the day;
- Tables of highest and second highest concentration or deposition values calculated at each receptor for each specified time period during a(n) ''N''-day period for any desired source combinations, and tables of the maximum 50 concentration or deposition values calculated for any desired source combinations for each specified time period.

d. Type of Model

ISC3 is a Gaussian plume model. It has been revised to perform a double integration of the Gaussian plume kernel for area sources.

e. Pollutant Types

ISC3 may be used to model primary pollutants and continuous releases of toxic and hazardous waste pollutants. Settling and deposition are treated.

f. Source-Receptor Relationships

ISC3 applies user-specified locations for point, line, area and volume sources, and user-specified receptor locations or receptor rings.

User input topographic evaluation for each receptor is used. Elevations above stack top are reduced to the stack top elevation, i.e., ''terrain chopping''.

User input height above ground level may be used when necessary to simulate impact at elevated or ''flag pole'' receptors, e.g., on buildings.

Actual separation between each source-receptor pair is used.

g. Plume Behavior

ISC3 uses Briggs (1969, 1971, 1975) plume rise equations for final rise.

Stack tip downwash equation from Briggs (1974) is used.

Revised building wake effects algorithm is used. For stacks higher than building height plus one-half the lesser of the building height or building width, the building wake algorithm of Huber and Snyder (1976) is used. For lower stacks, the building wake algorithm of Schulman and Scire (Schulman and Hanna, 1986) is used, but stack tip downwash and BID are not used.

For rolling terrain (terrain not above stack height), plume centerline is horizontal at height of final rise above source.

Fumigation is not treated.

h. Horizontal Winds

Constant, uniform (steady-state) wind is assumed for each hour.

Straight line plume transport is assumed to all downwind distances.

Separate wind speed profile exponents (Irwin, 1979; EPA, 1980) for both rural and urban cases are used.

An optional treatment for calm winds is included for short term modeling.

i. Vertical Wind Speed

Vertical wind speed is assumed equal to zero.

j. Horizontal Dispersion

Rural dispersion coefficients from Turner (1969) are used, with no adjustments for surface roughness or averaging time.

Urban dispersion coefficients from Briggs (Gifford, 1976) are used.

Buoyancy induced dispersion (Pasquill, 1976) is included.

Six stability classes are used.

k. Vertical Dispersion

Rural dispersion coefficients from Turner (1969) are used, with no adjustments for surface roughness.

Urban dispersion coefficients from Briggs (Gifford, 1976) are used.

Buoyancy induced dispersion (Pasquill, 1976) is included.

Six stability classes are used.

Mixing height is accounted for with multiple reflections until the vertical plume standard deviation equals 1.6 times the mixing height; uniform vertical mixing is assumed beyond that point.

Perfect reflection is assumed at the ground.

l. Chemical Transformation

Chemical transformations are treated using exponential decay. Time constant is input by the user.

m. Physical Removal

Dry deposition effects for particles are treated using a resistance formulation in which the deposition velocity is the sum of the resistances to pollutant transfer within the surface layer of the atmosphere, plus a gravitational settling term (EPA, 1994), based on the modified surface depletion scheme of Horst (1983).

n. Evaluation Studies

Bowers, J.F. and A.J. Anderson, 1981. An Evaluation Study for the Industrial Source Complex (ISC) Dispersion Model, EPA Publication No. EPA–450/4–81–002. U.S. Environmental Protection Agency, Research Triangle Park, NC.

Bowers, J.F., A.J. Anderson and W.R. Hargraves, 1982. Tests of the Industrial Source Complex (ISC) Dispersion Model at the Armco Middletown, Ohio Steel Mill. EPA Publication No. EPA–450/4–82–006. U.S. Environmental Protection Agency, Research Triangle Park, NC.

Environmental Protection Agency, 1992. Comparison of a Revised Area Source Algorithm for the Industrial Source Complex Short Term Model and Wind Tunnel Data. EPA Publication No. EPA–454/R–92–014. U.S. Environmental Protection Agency, Research Triangle Park, NC. (NTIS No. PB 93–226751)

Environmental Protection Agency, 1992. Sensitivity Analysis of a Revised Area Source Algorithm for the Industrial Source Complex Short Term Model. EPA Publication No. EPA–454/R–92–015. U.S. Environmental Protection Agency, Research Triangle Park, NC. (NTIS No. PB 93–226769)

Environmental Protection Agency, 1992. Development and Evaluation of a Revised Area Source Algorithm for the Industrial source complex Long Term Model. EPA Publication No. EPA–454/R–92–016. U.S. Environmental Protection Agency, Research Triangle Park, NC. (NTIS No. PB 93–226777)

Environmental Protection Agency, 1994. Development and Testing of a Dry Deposition Algorithm (Revised). EPA Publication No. EPA–454/R–94–015. U.S. Environmental Protection Agency, Research Triangle Park, NC. (NTIS No. PB 94–183100)

Scire, J.S. and L.L. Schulman, 1981. Evaluation of the BLP and ISC Models with SF_6 Tracer Data and SO_2 Measurements at Aluminum Reduction Plants. Air Pollution Control Association Specialty Conference on Dispersion Modeling for Complex Sources, St. Louis, MO.

Schulman, L.L. and S.R. Hanna, 1986. Evaluation of Downwash Modification to the Industrial Source Complex Model. Journal of the Air Pollution Control Association, 36: 258–264.

A.6 Urban Airshed Model (UAM)

Reference

Environmental Protection Agency, 1990. User's Guide for the Urban Airshed Model, Volume I–VIII. EPA Publication Nos. EPA–450/4–90–007a–c, d(R), e-g, and EPA–454/B–93–004, respectively. U.S. Environmental Protection Agency, Research Triangle Park, NC (NTIS Nos. PB 91–131227, PB 91–131235, PB 91–131243, PB 93–122380, PB 91–131268, PB 92–145382, and PB 92–224849, respectively, for Vols. I–VII).

Availability

The model code is available on the Support Center for Regulatory Air Models Bulletin Board System (see section A.0).

Abstract

UAM is an urban scale, three dimensional, grid type numerical simulation model. The model incorporates a condensed photochemical kinetics mechanism for urban atmospheres. The UAM is designed for computing ozone (O_3) concentrations under short-term, episodic conditions lasting one or two days resulting from emissions of oxides of nitrogen (NO_X), volatile organic compounds (VOC), and carbon monoxide (CO).

The model treats urban VOC emissions as their carbon-bond surrogates.

a. Recommendations for Regulatory Use

UAM is appropriate for the following applications: urban areas having significant ozone attainment problems and one hour averaging times.

UAM has many options but no specific recommendations can be made at this time on all options. The reviewing agency should be consulted on selection of options to be used in regulatory applications.

b. Input Requirements

Source data: gridded, hourly emissions of PAR, OLE, ETH, XYL, TOL, ALD2, FORM, ISOR, ETOTH, MEOH, CO, NO, and NO_2 for low-level sources. For major elevated point sources, hourly emissions, stack height, stack diameter, exit velocity, and exit temperature.

Meteorological data: hourly, gridded, divergence free, u and v wind components for each vertical level; hourly gridded mixing heights and surface temperatures; hourly exposure class; hourly vertical potential temperature gradient above and below the mixing height; hourly surface atmospheric pressure; hourly water mixing ratio; and gridded surface roughness lengths.

Air quality data: concentration of all carbon bond 4 species at the beginning of the simulation for each grid cell; and hourly concentrations of each pollutant at each level along the inflow boundaries and top boundary of the modeling region.

Other data requirements are: hourly mixed layer average, NO_2 photolysis rates; and ozone surface uptake resistance along with associated gridded vegetation (scaling) factors.

c. Output

Printed output includes:

- Gridded instantaneous concentration fields at user-specified time intervals for user-specified pollutants and grid levels;
- Gridded time-average concentration fields for user-specified time intervals, pollutants, and grid levels.

d. Type of Model

UAM is a three dimensional, numerical, photochemical grid model.

e. Pollutant Types

UAM may be used to model ozone (O_3) formation from oxides of nitrogen (NO_X) and volatile organic compound (VOC) emissions.

f. Source-Receptor Relationship

Low-level area and point source emissions are specified within each surface grid cell. Emissions from major point sources are placed within cells aloft in accordance with calculated effective plume heights.

Hourly average concentrations of each pollutant are calculated for all grid cells at each vertical level.

g. Plume Behavior

Plume rise is calculated for major point sources using relationships recommended by Briggs (1971).

h. Horizontal Winds

See Input Requirements.

i. Vertical Wind Speed

Calculated at each vertical grid cell interface from the mass continuity relationship using the input gridded horizontal wind field.

j. Horizontal Dispersion

Horizontal eddy diffusivity is set to a user specified constant value (nominally 50 m^2/s).

k. Vertical Dispersion

Vertical eddy diffusivities for unstable and neutral conditions calculated using relationships of Lamb *et al.* (1977); for stable conditions, the relationship of Businger and Arya (1974) is employed. Stability class, friction velocity, and Monin-Obukhov length determined using procedure of Liu et al. (1976).

l. Chemical Transformation

UAM employs a simplified version of the Carbon-Bond IV Mechanism (CBM–IV) developed by Gery *et al.* (1988) employing various steady state approximations. The CBM–IV mechanism incorporated in UAM utilizes an updated simulation of PAN chemistry that includes a peroxy-peroxy radical termination reaction, significant when the atmosphere is NO_X-limited (Gery et al., 1989). The current CBM–IV mechanism accommodates 34 species and 82 reactions.

m. Physical Removal

Dry deposition of ozone and other pollutant species are calculated. Vegetation (scaling) factors are applied to the reference surface uptake resistance of each species depending on land use type.

n. Evaluation Studies

Builtjes, P.J.H., K.D. van der Hurt and S.D. Reynolds, 1982. Evaluation of the Performance of a Photochemical Dispersion Model in Practical Applications. 13th International Technical Meeting on Air Pollution Modeling and Its Application, Ile des Embiez, France.

Cole, H.S., D.E. Layland, G.K. Moss and C.F. Newberry, 1983. The St. Louis Ozone Modeling Project. EPA Publication No. EPA–450/4–83–019. U.S. Environmental Protection Agency, Research Triangle Park, NC.

Dennis, R.L., M.W. Downton and R.S. Keil, 1983. Evaluation of Performance Measures for an Urban Photochemical Model. EPA Publication No. EPA–450/4–83–021. U.S. Environmental Protection Agency, Research Triangle Park, NC.

Haney, J.L. and T.N. Braverman, 1985. Evaluation and Application of the Urban Airshed Model in the Philadelphia Air Quality Control Region. EPA Publication No. EPA–450/4–85–003. U.S. Environmental Protection Agency, Research Triangle Park, NC.

Layland, D.E. and H.S. Cole, 1983. A Review of Recent Applications of the SAI Urban Airshed Model. EPA Publication No. EPA–450/4–84–004. U.S. Environmental Protection Agency, Research Triangle Park, NC.

Layland, D.E., S.D. Reynolds, H. Hogo and W.R. Oliver, 1983. Demonstration of Photochemical Grid Model Usage for Ozone Control Assessment. 76th Annual Meeting of the Air Pollution Control Association, Atlanta, GA.

Morris, R.E. et al., 1990. Urban Airshed Model Study of Five Cities. EPA Publication No. EPA–450/4–90–006a-g. U.S. Environmental Protection Agency, Research Triangle Park, NC.

Reynolds, S.D., H. Hogo, W.R. Oliver and L.E. Reid, 1982. Application of the SAI Airshed Model to the Tulsa Metropolitan Area, SAI No. 82004. Systems Applications, Inc., San Rafael, CA.

Schere, K.L. and J.H. Shreffler, 1982. Final Evaluation of Urban-Scale Photochemical Air Quality Simulation Models. EPA Publication No. EPA–600/3–82–094. U.S. Environmental Protection Agency, Research Triangle Park, NC.

Seigneur C., T.W. Tesche, C.E. Reid, P.M. Roth, W.R. Oliver and J.C. Cassmassi, 1981. The Sensitivity of Complex Photochemical Model Estimates to Detail In Input Information, Appendix A—A Compilation of Simulation Results. EPA Publication No. EPA–450/4–81–031b. U.S. Environmental Protection Agency, Research Triangle Park, NC.

South Coast Air Quality Management District, 1989. Air Quality Management Plan—Appendix V–R (Urban Airshed Model Performance Evaluation). El Monte, CA.

Stern, R. and B. Scherer, 1982. Simulation of a Photochemical Smog Episode in the Rhine-Ruhr Area with a Three Dimensional Grid Model. 13th International Technical Meeting on Air Pollution Modeling and Its Application, Ile des Embiez, France.

Tesche, T.W., C. Seigneur, L.E. Reid, P.M. Roth, W.R. Oliver and J.C. Cassmassi, 1981. The Sensitivity of Complex Photochemical Model Estimates to Detail in Input Information. EPA Publication No. EPA–450/4–81–031a. U.S. Environmental Protection Agency, Research Triangle Park, NC.

Tesche, T.W., W.R. Oliver, H. Hogo, P. Saxeena and J.L. Haney, 1983. Volume IV—Assessment of NO_X Emission Control Requirements in the South Coast Air Basin—Appendix A. Performance Evaluation of the Systems Applications Airshed Model for the 26–27 June 1974 O_3 Episode in the South Coast Air Basin, SYSAPP 83/037. Systems Applications, Inc., San Rafael, CA.

Tesche, T.W., W.R. Oliver, H. Hogo, P. Saxeena and J.L. Haney, 1983. Volume IV—Assessment of NO_X Emission Control Requirements in the South Coast Air Basin—Appendix B. Performance Evaluation of the Systems Applications Airshed Model for the 7–8 November 1978 NO_2 Episode in the South Coast Air Basin, SYSAPP 83/038. Systems Applications, Inc., San Rafael, CA.

Tesche, T.W., 1988. Accuracy of Ozone Air Quality Models. Journal of Environmental Engineering, 114(4): 739–752.

A.7 Offshore and Coastal Dispersion Model (OCD)

Reference

DiCristofaro, D.C. and S.R. Hanna, 1989. OCD: The Offshore and Coastal Dispersion Model, Version 4. Volume I: User's Guide, and Volume II: Appendices. Sigma Research Corporation, Westford, MA. (NTIS Nos. PB 93–144384 and PB 93–144392)

Availability

This model code is available on the Support Center for Regulatory Air Models Bulletin Board System and also on diskette (as PB 91–505230) from the National Technical Information Service (see section A.0).

Technical Contact

Minerals Management Service, Attn: Mr. Dirk Herkhof, Parkway Atrium Building, 381 Elden Street, Herndon, VA 22070–4817, Phone: (703) 787–1735.

Abstract

OCD is a straight-line Gaussian model developed to determine the impact of offshore emissions from point, area or line sources on the air quality of coastal regions. OCD incorporates overwater plume transport and dispersion as well as changes that occur as the plume crosses the shoreline. Hourly meteorological data are needed from both offshore and onshore locations. These include water surface temperature, overwater air temperature, mixing height, and relative humidity.

Some of the key features include platform building downwash, partial plume penetration into elevated inversions, direct use of turbulence intensities for plume dispersion, interaction with the overland internal boundary layer, and continuous shoreline fumigation.

a. Recommendations for Regulatory Use

OCD has been recommended for use by the Minerals Management Service for emissions

located on the Outer Continental Shelf (50 FR 12248; 28 March 1985). OCD is applicable for overwater sources where onshore receptors are below the lowest source height. Where onshore receptors are above the lowest source height, offshore plume transport and dispersion may be modeled on a case-by-case basis in consultation with the EPA Regional Office.

b. Input Requirements

Source data: point, area or line source location, pollutant emission rate, building height, stack height, stack gas temperature, stack inside diameter, stack gas exit velocity, stack angle from vertical, elevation of stack base above water surface and gridded specification of the land/water surfaces. As an option, emission rate, stack gas exit velocity and temperature can be varied hourly.

Meteorological data (over water): wind direction, wind speed, mixing height, relative humidity, air temperature, water surface temperature, vertical wind direction shear (optional), vertical temperature gradient (optional), turbulence intensities (optional).

Meteorological data (over land): wind direction, wind speed, temperature, stability class, mixing height.

Receptor data: location, height above local ground-level, ground-level elevation above the water surface.

c. Output

All input options, specification of sources, receptors and land/Water map including locations of sources and receptors.

Summary tables of five highest concentrations at each receptor for each averaging period, and average concentration for entire run period at each receptor.

Optional case study printout with hourly plume and receptor characteristics. Optional table of annual impact assessment from nonpermanent activities.

Concentration files written to disk or tape can be used by ANALYSIS postprocessor to produce the highest concentrations for each receptor, the cumulative frequency distributions for each receptor, the tabulation of all concentrations exceeding a given threshold, and the manipulation of hourly concentration files.

d. Type of Model

OCD is a Gaussian plume model constructed on the framework of the MPTER model.

e. Pollutant Types

OCD may be used to model primary pollutants. Settling and deposition are not treated.

f. Source-Receptor Relationship

Up to 250 point sources, 5 area sources, or 1 line source and 180 receptors may be used.

Receptors and sources are allowed at any location.

The coastal configuration is determined by a grid of up to 3600 rectangles. Each element of the grid is designated as either land or water to identify the coastline.

g. Plume Behavior

As in MPTER, the basic plume rise algorithms are based on Briggs' recommendations.

Momentum rise includes consideration of the stack angle from the vertical.

The effect of drilling platforms, ships, or any overwater obstructions near the source are used to decrease plume rise using a revised platform downwash algorithm based on laboratory experiments.

Partial plume penetration of elevated inversions is included using the suggestions of Briggs (1975) and Weil and Brower (1984).

Continuous shoreline fumigation is parametrized using the Turner method where complete vertical mixing through the thermal internal boundary layer (TIBL) occurs as soon as the plume intercepts the TIBL.

h. Horizontal Winds

Constant, uniform wind is assumed for each hour.

Overwater wind speed can be estimated from overland wind speed using relationship of Hsu (1981).

Wind speed profiles are estimated using similarity theory (Businger, 1973). Surface layer fluxes for these formulas are calculated from bulk aerodynamic methods.

i. Vertical Wind Speed

Vertical wind speed is assumed equal to zero.

j. Horizontal Dispersion

Lateral turbulence intensity is recommended as a direct estimate of horizontal dispersion. If lateral turbulence intensity is not available, it is estimated from boundary layer theory. For wind speeds less than 8 m/s, lateral turbulence intensity is assumed inversely proportional to wind speed.

Horizontal dispersion may be enhanced because of obstructions near the source. A virtual source technique is used to simulate the initial plume dilution due to downwash.

Formulas recommended by Pasquill (1976) are used to calculate buoyant plume enhancement and wind direction shear enhancement.

At the water/land interface, the change to overland dispersion rates is modeled using a virtual source. The overland dispersion rates can be calculated from either lateral turbulence intensity or Pasquill-Gifford curves. The change is implemented where the plume intercepts the rising internal boundary layer.

k. Vertical Dispersion

Observed vertical turbulence intensity is not recommended as a direct estimate of vertical dispersion. Turbulence intensity should be estimated from boundary layer theory as default in the model. For very stable conditions, vertical dispersion is also a function of lapse rate.

Vertical dispersion may be enhanced because of obstructions near the source. A virtual source technique is used to simulate the initial plume dilution due to downwash.

Formulas recommended by Pasquill (1976) are used to calculate buoyant plume enhancement.

At the water/land interface, the change to overland dispersion rates is modeled using a virtual source. The overland dispersion rates can be calculated from either vertical turbulence intensity or the Pasquill-Gifford coefficients. The change is implemented where the plume intercepts the rising internal boundary layer.

l. Chemical Transformation

Chemical transformations are treated using exponential decay. Different rates can be specified by month and by day or night.

m. Physical Removal

Physical removal is also treated using exponential decay.

n. Evaluation Studies

DiCristofaro, D.C. and S.R. Hanna, 1989. OCD: The Offshore and Coastal Dispersion Model. Volume I: User's Guide. Sigma Research Corporation, Westford, MA.

Hanna, S.R., L.L. Schulman, R.J. Paine and J.E. Pleim, 1984. The Offshore and Coastal Dispersion (OCD) Model User's Guide, Revised. OCS Study, MMS 84–0069. Environmental Research & Technology, Inc., Concord, MA. (NTIS No. PB 86–159803)

Hanna, S.R., L.L. Schulman, R.J. Paine, J.E. Pleim and M. Baer, 1985. Development and Evaluation of the Offshore and Coastal Dispersion (OCD) Model. Journal of the Air Pollution Control Association, 35: 1039–1047.

Hanna, S.R. and D.C. DiCristofaro, 1988. Development and Evaluation of the OCD/API Model. Final Report, API Pub. 4461, American Petroleum Institute, Washington, D.C.

A.8 Emissions and Dispersion Modeling System (EDMS)

Reference

Segal, H.M., 1991. ''EDMS—Microcomputer Pollution Model for Civilian Airports and Air Force Bases: User's Guide.'' FAA Report No. FAA–EE–91–3; USAF Report No. ESL–TR–91–31, Federal Aviation Administration, 800 Independence Avenue, S.W., Washington, D.C. 20591. (NTIS No. ADA 240528)

Segal, H.M. and Hamilton, P.L., 1988. ''A Microcomputer Pollution Model for Civilian Airports and Air Force Bases—Model Description.'' FAA Report No. FAA–EE–88–4; USAF Report No. ESL–TR–88–53, Federal Aviation Administration, 800 Independence Avenue, S.W., Washington, D.C. 20591. (NTIS No. ADA 199003)

Segal, H.M., 1988. ''A Microcomputer Pollution Model for Civilian Airports and Air Force Bases—Model Application and Background.'' FAA Report No. FAA–EE–88–5; USAF Report No. ESL–TR–88–55, Federal Aviation Administration, 800 Independence Avenue, S.W., Washington, D.C. 20591. (NTIS No. ADA 199794)

Availability

EDMS is available for $40 from: Federal Aviation Administration, Attn: Ms. Diana Liang, AEE–120, 800 Independence Avenue, S.W., Washington, D.C. 20591, Phone: (202) 267–3494.

Abstract

EDMS is a combined emissions/dispersion model for assessing pollution at civilian airports and military air bases. This model, which was jointly developed by the Federal Aviation Administration (FAA) and the United States Air Force (USAF), produces an emission inventory of all airport sources and calculates concentrations produced by these sources at specified receptors. The system stores emission factors for fixed sources such as fuel storage tanks and incinerators and also for mobile sources such as automobiles or aircraft. EDMS incorporates an emissions model to calculate an emission inventory for each airport source and a dispersion model, the Graphical Input Microcomputer Model (GIMM) (Segal, 1983) to calculate pollutant concentrations produced by these sources at specified receptors. The GIMM, which processes point, area, and line sources, also incorporates a special meteorological preprocessor for processing up to one year of National Climatic Data Center (NCDC) hourly data. The model operates in both a screening and refined mode, accepting up to 170 sources and 10 receptors.

a. Recommendations for Regulatory Use

EDMS is appropriate for the following applications:

- Cumulative effect of changes in aircraft operations, point source and mobile source emissions at airports or air bases;
- Simple terrain;
- Transport distances less than 50 kilometers; and
- 1-hour to annual averaging times.

b. Input Requirements

All data are entered through a ''runtime'' version of the Condor data base which is an

integral part of EDMS. Typical entry items are source and receptor coordinates, percent cold starts, vehicles per hour, etc. Some point sources, such as heating plants, require stack height, stack diameter, and effluent temperature inputs.

Wind speed, wind direction, hourly temperature, and Pasquill-Gifford stability category (P–G) are the meteorological inputs. They can be entered manually through the EDMS data entry screens or automatically through the processing of previously loaded NCDC hourly data.

c. Output

Printed outputs consist of:

• A monthly and yearly emission inventory report for each source entered; and

• A concentration summing report for up to 8760 hours (one year) of data.

d. Type of Model

For its emissions inventory calculations, EDMS uses algorithms consistent with the EPA Compilation of Air Pollutant Emission Factors, AP–42. For its dispersion calculations, EDMS uses the GIMM model which is described in reports FAA–EE–88–4 and FAA–EE–88–5, referenced above. GIMM uses a Gaussian plume algorithm.

e. Pollutant Types

EDMS inventories and calculates the dispersion of carbon monoxide, nitrogen oxides, sulphur oxides, hydrocarbons, and suspended particles.

f. Source-Receptor Relationship

Up to 170 sources and 10 receptors can be treated simultaneously. Area sources are treated as a series of lines that are positioned perpendicular to the wind.

Line sources (roadways, runways) are modeled as a series of points. Terrain elevation differences between sources and receptors are neglected.

Receptors are assumed to be at ground level.

g. Plume Behavior

Plume rise is calculated for all point sources (heating plants, incinerators, etc.) using Briggs plume rise equations (Catalano, 1986; Briggs, 1969; Briggs, 1971; Briggs, 1972).

Building and stack tip downwash effects are not treated.

Roadway dispersion employs a modification to the Gaussian plume algorithms as suggested by Rao and Keenan (1980) to account for close-in vehicle-induced turbulence.

h. Horizontal Winds

Steady state winds are assumed for each hour. Winds are assumed to be constant with altitude.

Winds are entered manually by the user or automatically by reading previously loaded NCC annual data files.

i. Vertical Wind Speed

Vertical wind speed is assumed to be zero.

j. Horizontal Dispersion

Four stability classes are used (P–G classes B through E).

Horizontal dispersion coefficients are computed using a table look-up and linear interpolation scheme. Coefficients are based on Pasquill (1976) as adapted by Petersen (1980).

A modified coefficient table is used to account for traffic-enhanced turbulence near roadways. Coefficients are based upon data included in Rao and Keenan (1980).

k. Vertical Dispersion

Four stability classes are used (P–G classes B through E).

Vertical dispersion coefficients are computed using a table look-up and linear interpolation scheme. Coefficients are based on Pasquill (1976) as adapted by Petersen (1980).

A modified coefficient table is used to account for traffic-enhanced turbulence near roadways. Coefficients are based upon data from Roa and Keenan (1980).

l. Chemical Transformation

Chemical transformations are not accounted for.

m. Physical Removal

Deposition is not treated.

n. Evaluation Studies

Segal, H.M. and P.L. Hamilton, 1988. A Microcomputer Pollution Model for Civilian Airports and Air Force Bases—Model Description. FAA Report No. FAA–EE–88–4; USAF Report No. ESL–TR–88–53, Federal Aviation Administration, 800 Independence Avenue, S.W., Washington, D.C. 20591.

Segal, H.M., 1988. A Microcomputer Pollution Model for Civilian Airports and Air Force Bases—Model Application and Background. FAA Report No. FAA–EE–88–5; USAF Report No. ESL–TR–88–55, Federal Aviation Administration, 800 Independence Avenue, S.W., Washington, D.C. 20591.

A.9 Complex Terrain Dispersion Model Plus Algorithms for Unstable Situations (CTDMPLUS)

Reference

Perry, S.G., D.J. Burns, L.H. Adams, R.J. Paine, M.G. Dennis, M.T. Mills, D.G.

Strimaitis, R.J. Yamartino and E.M. Insley, 1989. User's Guide to the Complex Terrain Dispersion Model Plus Algorithms for Unstable Situations (CTDMPLUS). Volume 1: Model Descriptions and User Instructions. EPA Publication No. EPA–600/8–89–041. Environmental Protection Agency, Research Triangle Park, NC. (NTIS No. PB 89–181–424)

Paine, R.J., D.G. Strimaitis, M.G. Dennis, R.J. Yamartino, M.T. Mills and E.M. Insley, 1987. User's Guide to the Complex Terrain Dispersion Model, Volume 1. EPA Publication No. EPA–600/8–87–058a. U.S. Environmental Protection Agency, Research Triangle Park, NC. (NTIS No. PB 88–162169)

Availability

This model code is available on the Support Center for Regulatory Air Models Bulletin Board System and also on diskette (as PB 90–504119) from the National Technical Information Service (see section A.0).

Abstract

CTDMPLUS is a refined point source Gaussian air quality model for use in all stability conditions for complex terrain applications. The model contains, in its entirety, the technology of CTDM for stable and neutral conditions. However, CTDMPLUS can also simulate daytime, unstable conditions, and has a number of additional capabilities for improved user friendliness. Its use of meteorological data and terrain information is different from other EPA models; considerable detail for both types of input data is required and is supplied by preprocessors specifically designed for CTDMPLUS. CTDMPLUS requires the parameterization of individual hill shapes using the terrain preprocessor and the association of each model receptor with a particular hill.

a. Recommendation for Regulatory Use

CTDMPLUS is appropriate for the following applications:

- Elevated point sources;
- Terrain elevations above stack top;
- Rural or urban areas;
- Transport distances less than 50 kilometers; and
- One hour to annual averaging times when used with a post-processor program such as CHAVG.

b. Input Requirements

Source data: For each source, user supplies source location, height, stack diameter, stack exit velocity, stack exit temperature, and emission rate; if variable emissions are appropriate, the user supplies hourly values for emission rate, stack exit velocity, and stack exit temperature.

Meteorological data: the user must supply hourly averaged values of wind, temperature and turbulence data for creation of the basic meteorological data file (''PROFILE''). Meteorological preprocessors then create a SURFACE data file (hourly values of mixed layer heights, surface friction velocity, Monin-Obukhov length and surface roughness length) and a RAWINsonde data file (upper air measurements of pressure, temperature, wind direction, and wind speed).

Receptor data: receptor names (up to 400) and coordinates, and hill number (each receptor must have a hill number assigned).

Terrain data: user inputs digitized contour information to the terrain preprocessor which creates the TERRAIN data file (for up to 25 hills).

c. Output

When CTDMPLUS is run, it produces a concentration file, in either binary or text format (user's choice), and a list file containing a verification of model inputs, i.e.,

- Input meteorological data from ''SURFACE'' and ''PROFILE''
- Stack data for each source
- Terrain information
- Receptor information
- Source-receptor location (line printer map).

In addition, if the case-study option is selected, the listing includes:

- Meteorological variables at plume height
- Geometrical relationships between the source and the hill
- Plume characteristics at each receptor, i.e.,

–> distance in along-flow and cross flow direction

–> effective plume-receptor height difference

–> effective σ_y & σ_z values, both flat terrain and hill induced (the difference shows the effect of the hill)

–> concentration components due to WRAP, LIFT and FLAT.

If the user selects the TOPN option, a summary table of the top 4 concentrations at each receptor is given. If the ISOR option is selected, a source contribution table for every hour will be printed.

A separate disk file of predicted (1-hour only) concentrations (''CONC'') is written if the user chooses this option. Three forms of output are possible:

(1) A binary file of concentrations, one value for each receptor in the hourly sequence as run;

(2) A text file of concentrations, one value for each receptor in the hourly sequence as run; or

(3) A text file as described above, but with a listing of receptor information (names, positions, hill number) at the beginning of the file.

Hourly information provided to these files besides the concentrations themselves includes the year, month, day, and hour information as well as the receptor number with the highest concentration.

d. Type of Model

CTDMPLUS is a refined steady-state, point source plume model for use in all stability conditions for complex terrain applications.

e. Pollutant Types

CTDMPLUS may be used to model non-reactive, primary pollutants.

f. Source-Receptor Relationship

Up to 40 point sources, 400 receptors and 25 hills may be used. Receptors and sources are allowed at any location. Hill slopes are assumed not to exceed 15°, so that the linearized equation of motion for Boussinesq flow are applicable. Receptors upwind of the impingement point, or those associated with any of the hills in the modeling domain, require separate treatment.

g. Plume Behavior

As in CTDM, the basic plume rise algorithms are based on Briggs' (1975) recommendations.

A central feature of CTDMPLUS for neutral/stable conditions is its use of a critical dividing-streamline height (H_c) to separate the flow in the vicinity of a hill into two separate layers. The plume component in the upper layer has sufficient kinetic energy to pass over the top of the hill while streamlines in the lower portion are constrained to flow in a horizontal plane around the hill. Two separate components of CTDMPLUS compute ground-level concentrations resulting from plume material in each of these flows.

The model calculates on an hourly (or appropriate steady averaging period) basis how the plume trajectory (and, in stable/neutral conditions, the shape) is deformed by each hill. Hourly profiles of wind and temperature measurements are used by CTDMPLUS to compute plume rise, plume penetration (a formulation is included to handle penetration into elevated stable layers, based on Briggs (1984)), convective scaling parameters, the value of H_c, and the Froude number above H_c.

h. Horizontal Winds

CTDMPLUS does not simulate calm meteorological conditions. Both scalar and vector wind speed observations can be read by the model. If vector wind speed is unavailable, it is calculated from the scalar wind speed. The assignment of wind speed (either vector or scalar) at plume height is done by either:

- Interpolating between observations above and below the plume height, or
- Extrapolating (within the surface layer) from the nearest measurement height to the plume height.

i. Vertical Wind Speed

Vertical flow is treated for the plume component above the critical dividing streamline height (H_c); see ''Plume Behavior''.

j. Horizontal Dispersion

Horizontal dispersion for stable/neutral conditions is related to the turbulence velocity scale for lateral fluctuations, σ_v, for which a minimum value of 0.2 m/s is used. Convective scaling formulations are used to estimate horizontal dispersion for unstable conditions.

k. Vertical Dispersion

Direct estimates of vertical dispersion for stable/neutral conditions are based on observed vertical turbulence intensity, e.g., σ_w (standard deviation of the vertical velocity fluctuation). In simulating unstable (convective) conditions, CTDMPLUS relies on a skewed, bi-Gaussian probability density function (PDF) description of the vertical velocities to estimate the vertical distribution of pollutant concentration.

l. Chemical Transformation

Chemical transformation is not treated by CTDMPLUS.

m. Physical Removal

Physical removal is not treated by CTDMPLUS (complete reflection at the ground/hill surface is assumed).

n. Evaluation Studies

Burns, D.J., L.H. Adams and S.G. Perry, 1990. Testing and Evaluation of the CTDMPLUS Dispersion Model: Daytime Convective Conditions. Environmental Protection Agency, Research Triangle Park, NC.

Paumier, J.O., S.G. Perry and D.J. Burns, 1990. An Analysis of CTDMPLUS Model Predictions with the Lovett Power Plant Data Base. Environmental Protection Agency, Research Triangle Park, NC.

Paumier, J.O., S.G. Perry and D.J. Burns, 1992. CTDMPLUS: A Dispersion Model for Sources near Complex Topography. Part II: Performance Characteristics. Journal of Applied Meteorology, 31(7): 646–660.

A. REF References

Benson, P.E., 1979. CALINE3—A Versatile Dispersion Model for Predicting Air Pollution Levels Near Highways and Arterial Streets. Interim Report, Report Number FHWA/CA/TL–79/23. Federal Highway Administration, Washington, D.C.

Briggs, G.A., 1969. Plume Rise. U.S. Atomic Energy Commission Critical Review Series,

Oak Ridge National Laboratory, Oak Ridge, TN. (NTIS No. TID–25075)

Briggs, G.A., 1971. Some Recent Analyses of Plume Rise Observations. Proceedings of the Second International Clean Air Congress, edited by H.M. Englund and W.T. Berry. Academic Press, New York, NY.

Briggs, G.A., 1974. Diffusion Estimation for Small Emissions. USAEC Report ATDL–106. U.S. Atomic Energy Commission, Oak Ridge, TN.

Briggs, G.A., 1975. Plume Rise Predictions. Lectures on Air Pollution and Environmental Impact Analyses. American Meteorological Society, Boston, MA, pp. 59–111.

Bjorklund, J.R. and J.F. Bowers, 1982. User's Instructions for the SHORTZ and LONGZ Computer Programs. EPA Publication No. EPA–903/9–82–004a and b. U.S. Environmental Protection Agency, Region III, Philadelphia, PA.

Businger, J.A., 1973. Turbulence Transfer in the Atmospheric Surface Layer. Workshop in Micrometeorology. American Meteorological Society, Boston, MA, pp. 67–100.

Businger, J.A. and S.P. Arya, 1974. Height of the Mixed Layer in the Stably Stratified Planetary Boundary Layer. Advances in Geophysics, Vol. 18A, F.N. Frankiel and R.E. Munn (Eds.), Academic Press, New York, NY.

Catalano, J.A., 1986. Addendum to the User's Manual for the Single Source (CRSTER) Model. EPA Publication No. EPA–600/8–86–041. U.S. Environmental Protection Agency, Research Triangle Park, NC. (NTIS No. PB 87–145843)

Environmental Protection Agency, 1980. Recommendations on Modeling (October 1980 Meetings). Appendix G to: Summary of Comments and Responses on the October 1980 Proposed Revisions to the Guideline on Air Quality Models. Meteorology and Assessment Division, Office of Research and Development, Research Triangle Park, NC.

Gery, M.W., G.Z. Whitten and J.P. Killus, 1988. Development and Testing of CBM–IV for Urban and Regional Modeling. EPA Publication No. EPA–600/3–88–012. U.S. Environmental Protection Agency, Research Triangle Park, NC. (NTIS No. PB 88–180039)

Gery, M.W., G.Z. Whitten, J.P. Killus and M.C. Dodge, 1989. A Photochemical Kinetics Mechanism for Urban and Regional Scale Computer Modeling. Journal of Geophysical Research, 94: 12,925–12,956.

Gifford, F.A., Jr. 1976. Turbulent Diffusion Typing Schemes—A Review. Nuclear Safety, 17: 68–86.

Horst, T.W., 1983. A Correction to the Gaussian Source-depletion Model. In *Precipitation Scavenging, Dry Deposition and Resuspension*. H. R. Pruppacher, R.G. Semonin and W.G.N. Slinn, eds., Elsevier, NY.

Hsu, S.A., 1981. Models for Estimating Offshore Winds from Onshore Meteorological Measurements. Boundary Layer Meteorology, 20: 341–352.

Huber, A.H. and W.H. Snyder, 1976. Building Wake Effects on Short Stack Effluents. Third Symposium on Atmospheric Turbulence, Diffusion and Air Quality, American Meteorological Society, Boston, MA.

Irwin, J.S., 1979. A Theoretical Variation of the Wind Profile Power-Law Exponent as a Function of Surface Roughness and Stability. Atmospheric Environment, 13: 191–194.

Lamb, R.G. et al., 1977. Continued Research in Mesoscale Air Pollution Simulation Modeling—Vol. VI: Further Studies in the Modeling of Microscale Phenomena, Report Number EF77–143. Systems Applications, Inc., San Rafael, CA.

Liu, M.K. et al., 1976. The Chemistry, Dispersion, and Transport of Air Pollutants Emitted from Fossil Fuel Power Plants in California: Data Analysis and Emission Impact Model. Systems Applications, Inc., San Rafael, CA.

Moore, G.E., T.E. Stoeckenius and D.A. Stewart, 1982. A Survey of Statistical Measures of Model Performance and Accuracy for Several Air Quality Model. EPA Publication No. EPA–450/4–83–001. U.S. Environmental Protection Agency, Research Triangle Park, NC.

Pasquill, F., 1976. Atmospheric Dispersion Parameters in Gaussian Plume Modeling Part II. Possible Requirements for Change in the Turner Workbook Values. EPA Publication No. EPA–600/4–76–030b. U.S. Environmental Protection Agency, Research Triangle Park, NC.

Petersen, W.B., 1980. User's Guide for HIWAY–2 A Highway Air Pollution Model. EPA Publication No. EPA–600/8–80–018. U.S. Environmental Protection Agency, Research Triangle Park, NC. (NTIS PB 80–227556)

Rao, T.R. and M.T. Keenan, 1980. Suggestions for Improvement of the EPA–HIWAY Model. Journal of the Air Pollution Control Association, 30: 247–256 (and reprinted as Appendix C in Petersen, 1980).

Segal, H.M., 1983. Microcomputer Graphics in Atmospheric Dispersion Modeling. Journal of the Air Pollution Control Association, 23: 598–600.

Turner, D.B., 1969. Workbook of Atmospheric Dispersion Estimates. PHS Publication No. 999–26. U.S. Environmental Protection Agency, Research Triangle, Park, NC.

Weil, J.C. and R.P. Brower, 1984. An Updated Gaussian Plume Model for Tall Stacks. Journal of the Air Pollution Control Association, 34: 818–827.

APPENDIX B TO APPENDIX W OF PART 51—SUMMARIES OF ALTERNATIVE AIR QUALITY MODELS

Table of Contents

B.0 Introduction and Availability
B.1 AVACTA II Model
B.2 Dense Gas Dispersion Model (DEGADIS)

B.3 ERT Visibility Model
B.4 HGSYSTEM
B.5 HOTMAC/RAPTAD
B.6 LONGZ
B.7 Maryland Power Plant Siting Program (PPSP) Model
B.8 Mesoscale Puff Model (MESOPUFF II)
B.9 Mesoscale Transport Diffusion and Deposition Model For Industrial Sources (MTDDIS)
B.10 Multi-Source (SCSTER) Model
B.11 PANACHE
B.12 PLUME Visibility Model (PLUVUE II)
B.13 Point, Area, Line Source Algorithm (PAL–DS)
B.14 Reactive Plume Model (RPM–IV)
B.15 Shoreline Dispersion Model (SDM)
B.16 SHORTZ
B.17 Simple Line-Source Model
B.18 SLAB
B.19 WYNDvalley Model
B.REF References

B.0 Introduction and Availability

This appendix summarizes key features of refined air quality models that may be considered on a case-by-case basis for individual regulatory applications. For each model, information is provided on availability, approximate cost, regulatory use, data input, output format and options, simulation of atmospheric physics and accuracy. The models are listed by name in alphabetical order.

There are three separate conditions under which these models will normally be approved for use:

1. A demonstration can be made that the model produces concentration estimates equivalent to the estimates obtained using a preferred model (e.g., the maximum or high, second-high concentration is within 2% of the estimate using the comparable preferred model);
2. A statistical performance evaluation has been conducted using measured air quality data and the results of that evaluation indicate the model in appendix B performs better for the application than a comparable model in appendix A; and
3. There is no preferred model for the specific application but a refined model is needed to satisfy regulatory requirements.

Any one of these three separate conditions may warrant use of these models. See section 3.2, Use of Alternative Models, for additional details.

Many of these models have been subject to a performance evaluation by comparison with observed air quality data. A summary of such comparisons for models contained in this appendix is included in Moore *et al.* (1982). Where possible, several of the models contained herein have been subjected to rigorous evaluation exercises, including (1) statistical performance measures recommended by the American Meteorological Society and (2) peer scientific reviews.

A source for some of these models and user's documentation is: Computer Products, National Technical Information Service (NTIS), U.S. Department of Commerce, Springfield, VA 22161, Phone: (703) 487–4650. A number of the model codes and selected, abridged user's guides are also available from the Support Center for Regulatory Air Models Bulletin Board System[19] (SCRAM BBS), Telephone (919) 541–5742. The SCRAM BBS is an electronic bulletin board system designed to be user friendly and accessible from anywhere in the country. Model users with personal computers are encouraged to use the SCRAM BBS to download current model codes and text files.

B.1 AVACTA II Model

Reference

Zannetti, P., G. Carboni and R. Lewis, 1985. AVACTA II User's Guide (Release 3). AeroVironment, Inc., Technical Report AV–OM–85/520.

Availability

A 3½'' diskette of the FORTRAN coding and the user's guide are available at a cost of $3,500 (non-profit organization) or $5,000 (other organizations) from: AeroVironment, Inc., 222 Huntington Drive, Monrovia, CA 91016, Phone: (818) 357–9983.

Abstract

The AVACTA II model is a Gaussian model in which atmospheric dispersion phenomena are described by the evolution of plume elements, either segments or puffs. The model can be applied for short time (e.g., one day) simulations in both transport and calm conditions.

The user is given flexibility in defining the computational domain, the three-dimensional meteorological and emission input, the receptor locations, the plume rise formulas, the sigma formulas, etc. Without explicit user's specifications, standard default values are assumed.

AVACTA II provides both concentration fields on the user specified receptor points, and dry/wet deposition patterns throughout the domain. The model is particularly oriented to the simulation of the dynamics and transformation of sulfur species (SO_2 and $SO_4^{=}$), but can handle virtually any pair of primary-secondary pollutants.

a. Recommendations for Regulatory Use

AVACTA II can be used if it can be demonstrated to estimate concentrations equivalent to those provided by the preferred model for a given application. AVACTA II must be executed in the equivalent mode.

AVACTA II can be used on a case-by-case basis in lieu of a preferred model if it can be demonstrated, using the criteria in section

3.2, that AVACTA II is more appropriate for the specific application. In this case the model options/modes which are most appropriate for the application should be used.

b. Input Requirements

A time-varying input is required at each computational step. Only those data which have changed need to be input by the user.

Source data requirements are: Coordinates, emission rates of primary and secondary pollutants, initial plume sigmas (for non-point sources), exit temperature, exit velocity, stack inside diameter.

Meteorological data requirements are: surface wind measurements, wind profiles (if available), atmospheric stability profiles, mixing heights.

Receptor data requirements are: receptor coordinates.

Other data requirements: coordinates of the computational domain, grid cell specification, terrain elevations, user's computational and printing options.

c. Output

The model's output is provided according to user's printing flags. Hourly, 3-hour and 24-hour concentration averages are computed, together with highest and highest-second-highest concentration values. Both partial and total concentrations are provided.

d. Type of Model

AVACTA II is Gaussian segment/puff model.

e. Pollutant Types

AVACTA II can handle any couple of primary-secondary pollutants (e.g., SO_2 and $SO_4^{=}$).

f. Source Receptor Relationship

The AVACTA II approach maintains the basic Gaussian formulation, but allows a numerical simulation of both nonstationary and nonhomogeneous meteorological conditions. The emitted pollutant material is divided into a sequence of ''elements,'' either segments or puffs, which are connected together but whose dynamics are a function of the local meteorological conditions. Since the meteorological parameters vary with time and space, each element evolves according to the different meteorological conditions encountered along its trajectory.

AVACTA II calculates the partial contribution of each source in each receptor during each interval. The partial concentration is the sum of the contribution of all existing puffs, plus that of the closest segment.

g. Plume Behavior

The user can select the following plume rise formulas:

Briggs (1969, 1971, 1972)

CONCAWE (Briggs, 1975)

Lucas-Moore (Briggs, 1975)

User's function, i.e., a subroutine supplied by the user

With cold plumes, the program uses a special routine for the computation of the jet plume rise. The user can also select several computational options that control plume behavior in complex terrain and its total/partial reflections.

h. Horizontal Winds

A 3D mass-consistent wind field is optionally generated.

i. Vertical Wind Speed

A 3D mass-consistent wind field is optionally generated.

j. Horizontal Dispersion

During each step, the sigmas of each element are increased. The user can select the following sigma functions:

Pasquill-Gifford-Turner (in the functional form specified by Green et al., 1980)

Brookhaven (Gifford, 1975)

Briggs, open country (Gifford, 1975)

Briggs, urban, i.e., McElroy-Pooler (Gifford, 1975)

Irwin (1979a)

LO–LOCAT (MacCready et al., 1974)

User-specified function, by points

User-specified function, with a user's subroutine

The virtual distance/age concept is used for incrementing the sigmas at each time step.

k. Vertical Dispersion

During each step, the sigmas of each element are increased. The user can select the following sigma functions:

Pasquill-Gifford-Turner (in the functional form specified by Green et al., 1980)

Brookhaven (Gifford, 1975)

Briggs, open country (Gifford, 1975)

Briggs, urban, i.e., McElroy-Pooler (Gifford, 1975)

LO–LOCAT (MacCready et al., 1974)

User-specified function, with a user's subroutine

The virtual distance/age concept is used for incrementing the sigmas at each time step.

l. Chemical Transformation

First order chemical reactions (primary-to-secondary pollutant)

m. Physical Removal

First order dry and wet deposition schemes

n. Evaluation Studies

Zannetti P., G. Carboni and A. Ceriani, 1985. AVACTA II Model Simulations of Worst-Case Air Pollution Scenarios in

Northern Italy. 15th International Technical Meeting on Air Pollution Modeling and Its Application, St. Louis, Missouri, April 15–19.

B.2 Dense Gas Dispersion Model (DEGADIS)

Reference

Environmental Protection Agency, 1989. User's Guide for the DEGADIS 2.1—Dense Gas Dispersion Model. EPA Publication No. EPA–450/4–89–019. U.S. Environmental Protection Agency, Research Triangle Park, NC 27711. (NTIS No. PB 90–213893)

Availability

The model code is only available on the Support Center for Regulatory Air Models Bulletin Board System (see section B.0).

Abstract

DEGADIS 2.1 is a mathematical dispersion model that can be used to model the transport of toxic chemical releases into the atmosphere. Its range of applicability includes continuous, instantaneous, finite duration, and time-variant releases; negatively-buoyant and neutrally-buoyant releases; ground-level, low-momentum area releases; ground-level or elevated upwardly-directed stack releases of gases or aerosols. The model simulates only one set of meteorological conditions, and therefore should not be considered applicable over time periods much longer than 1 or 2 hours. The simulations are carried out over flat, level, unobstructed terrain for which the characteristic surface roughness is not a significant fraction of the depth of the dispersion layer. The model does not characterize the density of aerosol-type releases; rather, the user must assess that independently prior to the simulation.

a. Recommendations for Regulatory Use

DEGADIS can be used as a refined modeling approach to estimate short-term ambient concentrations (1-hour or less averaging times) and the expected area of exposure to concentrations above specified threshold values for toxic chemical releases. The model is especially useful in situations where density effects are suspected to be important and where screening estimates of ambient concentrations are above levels of concern.

b. Input Requirements

Data may be input directly from an external input file or via keyboard using an interactive program module. The model is not set up to accept real-time meteorological data or convert units of input values. Chemical property data must be input by the user. Such data for a few selected species are available within the model. Additional data may be added to this data base by the user.

Source data requirements are: emission rate and release duration; emission chemical and physical properties (molecular weight, density vs. concentration profile in the case of aerosol releases, and contaminant heat capacity in the case of a nonisothermal gas release; stack parameters (i.e., diameter, elevation above ground level, temperature at release point).

Meteorological data requirements are: wind speed at designated height above ground, ambient temperature and pressure, surface roughness, relative humidity, and ground surface temperature (which in most cases can be adequately approximated by the ambient temperature).

Receptor data requirements are: averaging time of interest, above-ground height of receptors, and maximum distance between receptors (since the model computes downwind receptor distances to optimize model performance, this parameter is used only for nominal control of the output listing, and is of secondary importance). No indoor concentrations are calculated by the model.

c. Output

Printed output includes in tabular form:

- Listing of model input data;
- Plume centerline elevation, mole fraction, concentration, density, and temperature at each downwind distance;
- σ_y and σ_z values at each downwind distance;
- Off-centerline distances to 2 specified concentration values at a specified receptor height at each downwind distance (these values can be used to draw concentration isopleths after model execution);
- Concentration vs. time histories for finite-duration releases (if specified by user).

The output print file is automatically saved and must be sent to the appropriate printer by the user after program execution.

No graphical output is generated by the current version of this program.

d. Type of Model

DEGADIS estimates plume rise and dispersion for vertically-upward jet releases using mass and momentum balances with air entrainment based on laboratory and field-scale data. These balances assume Gaussian similarity profiles for velocity, density, and concentration within the jet. Ground-level denser-than-air phenomena is treated using a power law concentration distribution profile in the vertical and a hybrid top hat-Gaussian concentration distribution profile in the horizontal. A power law specification is used for the vertical wind profile. Ground-level cloud slumping phenomena and air entrainment are based on laboratory measurements and field-scale observations.

e. Pollutant Types

Neutrally- or negatively-buoyant gases and aerosols. Pollutants are assumed to be non-reactive and non-depositing.

f. Source-Receptor Relationships

Only one source can be modeled at a time.

There is no limitation to the number of receptors; the downwind receptor distances are internally-calculated by the model. The DEGADIS calculation is carried out until the plume centerline concentration is 50% below the lowest concentration level specified by the user.

The model contains no modules for source calculations or release characterization.

g. Plume Behavior

Jet/plume trajectory is estimated from mass and momentum balance equations. Surrounding terrain is assumed to be flat, and stack tip downwash, building wake effects, and fumigation are not treated.

h. Horizontal Winds

Constant logarithmic velocity profile which accounts for stability and surface roughness is used.

The wind speed profile exponent is determined from a least squares fit of the logarithmic profile from ground level to the wind speed reference height. Calm winds can be simulated for ground-level low-momentum releases.

Along-wind dispersion of transient releases is treated using the methods of Colenbrander (1980) and Beals (1971).

i. Vertical Wind Speed

Not treated.

j. Horizontal Dispersion

When the plume centerline is above ground level, horizontal dispersion coefficients are based upon Turner (1969) and Slade (1968) with adjustments made for averaging time and plume density.

When the plume centerline is at ground level, horizontal dispersion also accounts for entrainment due to gravity currents as parameterized from laboratory experiments.

k. Vertical Dispersion

When the plume centerline is above ground level, vertical dispersion coefficients are based upon Turner (1969) and Slade (1968). Perfect ground reflection is applied.

In the ground-level dense-gas regime, vertical dispersion is also based upon results from laboratory experiments in density-stratified fluids.

l. Chemical Transformation

Not specifically treated.

m. Physical Removal

Not treated.

n. Evaluation Studies

Spicer, T.O. and J.A. Havens, 1986. Development of Vapor Dispersion Models for Non-neutrally Buoyant Gas Mixtures—Analysis of USAF/N_2O_4 Test Data. USAF Engineering and Services Laboratory, Final Report ESL–TR–86–24.

Spicer, T.O. and J.A. Havens, 1988. Development of Vapor Dispersion Models for Non-neutrally Buoyant Gas Mixtures—Analysis of TFI/NH_3 Test Data. USAF Engineering and Services Laboratory, Final Report.

o. Operating Information

The model requires either a VAX computer or an IBM®—compatible PC for its execution. The model currently does not require supporting software. A FORTRAN compiler is required to generate program executables in the VAX computing environment. PC executables are provided within the source code; however, a PC FORTRAN compiler may be used to tailor a PC executable to the user's PC environment.

B.3 ERT Visibility Model

Reference

ENSR Consulting and Engineering, 1990. ERT Visibility Model: Version 4; Technical Description and User's Guide. Document M2020–003. ENSR Consulting and Engineering, 35 Nagog Park, Acton, MA 01720.

Availability

The user's guide and model code on diskette are available as a package (as PB 96–501978) from the National Technical Information Service (see section B.0).

Abstract

The ERT Visibility Model is a Gaussian dispersion model designed to estimate visibility impairment for arbitrary lines of sight due to isolated point source emissions by simulating gas-to-particle conversion, dry deposition, NO to NO_2 conversion and linear radiative transfer.

a. Recommendations for Regulatory Use

There is no specific recommendation at the present time. The ERT Visibility Model may be used on a case-by-case basis.

b. Input Requirements

Source data requirements are: stack height, stack temperature, emissions of SO_2, NO_X, TSP, fraction of NO_X as NO_2, fraction of TSP which is carbonaceous, exit velocity, and exit radius.

Meteorological data requirements are: hourly ambient temperature, mixing depth,

wind speed at stack height, stability class, potential temperature gradient, and wind direction.

Receptor data requirements are: observer coordinates with respect to source, latitude, longitude, time zone, date, time of day, elevation, relative humidity, background visual range, line-of-sight azimuth and elevation angle, inclination angle of the observed object, distance from observer to object, object and surface reflectivity, number and spacing of integral receptor points along line of sight.

Other data requirements are: ambient concentrations of O_3 and NO_X, deposition velocity of TSP, sulfate, nitrate, SO_2 and NO_X, first-order transformation rate for sulfate and nitrate.

c. Output

Printed output includes both summary and detailed results as follows: Summary output: Page 1—site, observer and object parameters; Page 2—optical pollutants and associated extinction coefficients; Page 3—plume model input parameters; Page 4—total calculated visual range reduction, and each pollutant's contribution; Page 5—calculated plume contrast, object contrast and object contrast degradation at the 550nm wavelength; Page 6—calculated blue/red ratio and ΔE (U*V*W*) values for both sky and object discoloration.

Detailed output: phase functions for each pollutant in four wavelengths (400, 450, 550, 650nm), concentrations for each pollutant along sight path, solar geometry contrast parameters at all wavelengths, intensities, tristimulus values and chromaticity coordinates for views of the object, sun, background sky and plume.

d. Type of Model

ERT Visibility model is a Gaussian plume model for estimating visibility impairment.

e. Pollutant Types

Optical activity of sulfate, nitrate (derived from SO_2 and NO_X emissions), primary TSP and NO_2 is simulated.

f. Source Receptor Relationship

Single source and hour is simulated. Unlimited number of lines-of-sight (receptors) is permitted per model run.

g. Plume Behavior

Briggs (1971) plume rise equations for final rise are used.

h. Horizontal Wind Field

A single wind speed and direction is specified for each case study. The wind is assumed to be spatially uniform.

i. Vertical Wind Speed

Vertical wind speed is assumed equal to zero.

j. Horizontal Dispersion

Rural dispersion coefficients from Turner (1969) are used.

k. Vertical Dispersion

Rural dispersion coefficients from Turner (1969) are used. Mixing height is accounted for with multiple reflection handled by summation of series near the source, and Fourier representation farther downwind.

l. Chemical Transformation

First order transformations of sulfates and nitrates are used.

m. Physical Removal

Dry deposition is treated by the source depletion method.

n. Evaluation Studies

Seigneur, C., R.W. Bergstrom and A.B. Hudischewskyj, 1982. Evaluation of the EPA PLUVUE Model and the ERT Visibility Model Based on the 1979 VISTTA Data Base. EPA Publication No. EPA–450/4–82–008. U.S. Environmental Protection Agency, Research Triangle Park, NC.

White, W.H., C. Seigneur, D.W. Heinold, M.W. Eltgroth, L.W. Richards, P.T. Roberts, P.S. Bhardwaja, W.D. Conner and W.E. Wilson, Jr., 1985. Predicting the Visibility of Chimney Plumes: An Inter-comparison of Four Models with Observations at a Well-Controlled Power Plant. Atmospheric Environment, 19: 515–528.

B.4 HGSYSTEM

(Dispersion Models for Ideal Gases and Hydrogen Fluoride)

Reference

Post, L. (ed.), 1994. HGSYSTEM 3.0 Technical Reference Manual. Shell Research Limited, Thornton Research Centre, Chester, United Kingdom. (TNER 94.059)

Post, L., 1994. HGSYSTEM 3.0 User's Manual. Shell Research Limited, Thornton Research Centre, Chester, United Kingdom. (TNER 94.059)

Availability

The PC–DOS version of the HGSYSTEM software (HGSYSTEM: Version 3.0, Programs for modeling the dispersion of ideal gas and hydrogen fluoride releases, executable programs and source code can be installed from diskettes. These diskettes and all documentation are available as a package from API [(202) 682–8340] or from NTIS as PB 96–501960 (see section B.0).

Technical Contacts

Doug N. Blewitt, AMOCO Corporation, 1670 Broadway/MC 2018, Denver, CO, 80201, (303) 830–5312.

Howard J. Feldman, American Petroleum Institute, 1220 L Street Northwest, Washington, DC 20005, (202) 682–8340.

Abstract

HGSYSTEM is a PC-based software package consisting of mathematical models for estimating of one or more consecutive phases between spillage and near-field and far-field dispersion of a pollutant. The pollutant can be either a two-phase, multi-compound mixture of non-reactive compounds or hydrogen fluoride (HF) with chemical reactions. The individual models are:

Database program:

DATAPROP Generates physical properties used in other HGSYSTEM models

Source term models:

SPILL Transient liquid release from a pressurized vessel

HFSPILL SPILL version specifically for HF

LPOOL Evaporating multi-compound liquid pool model

Near-field dispersion models:

AEROPLUME High-momentum jet dispersion model

HFPLUME AEROPLUME version specifically for HF

HEGABOX Dispersion of instantaneous heavy gas releases

Far-field dispersion models:

HEGADAS(S,T) Heavy gas dispersion (steady-state and transient version)

PGPLUME Passive Gaussian dispersion

Utility programs:

HFFLASH Flashing of HF from pressurized vessel

POSTHS/POSTHT Post-processing of HEGADAS(S,T) results

PROFILE Post-processor for concentration contours of airborne plumes

GET2COL Utility for data retrieval

The models assume flat, unobstructed terrain. HGSYSTEM can be used to model steady-state, finite-duration, instantaneous and time dependent releases, depending on the individual model used. The models can be run consecutively, with relevant data being passed on from one model to the next using link files. The models can be run in batch mode or using an iterative utility program.

a. Recommendations for Regulatory Use

HGSYSTEM can be used as a refined model to estimate short-term ambient concentrations. For toxic chemical releases (non-reactive chemicals or hydrogen fluoride; 1-hour or less averaging times) the expected area of exposure to concentrations above specified threshold values can be determined. For flammable non-reactive gases it can be used to determine the area in which the cloud may ignite.

b. Input Requirements

HFSPILL input data: reservoir data (temperature, pressure, volume, HF mass, mass-fraction water), pipe-exit diameter and ambient pressure.

EVAP input data: spill rate, liquid properties, and evaporation rate (boiling pool) or ambient data (non-boiling pool).

HFPLUME and PLUME input data: reservoir characteristics, pollutant parameters, pipe/release data, ambient conditions, surface roughness and stability class.

HEGADAS input data: ambient conditions, pollutant parameters, pool data or data at transition point, surface roughness, stability class and averaging time.

PGPLUME input data: link data provided by HFPLUME and the averaging time.

c. Output

The HGSYSTEM models contain three post-processor programs which can be used to extract modeling results for graphical display by external software packages. GET2COL can be used to extract data from the model output files. HSPOST can be used to develop isopleths, extract any 2 parameters for plotting and correct for finite release duration. HTPOST can be used to produce time history plots.

HFSPILL output data: reservoir mass, spill rate, and other reservoir variables as a function of time. For HF liquid, HFSPILL generates link data to HFPLUME for the initial phase of choked liquid flow (flashing jet), and link data to EVAP for the subsequent phase of unchoked liquid flow (evaporating liquid pool).

EVAP output data: pool dimensions, pool evaporation rate, pool mass and other pool variables for steady state conditions or as a function of time. EVAP generates link data to the dispersion model HEGADAS (pool dimensions and pool evaporation rate).

HFPLUME and PLUME output data: plume variables (concentration, width, centroid height, temperature, velocity, etc.) as a function of downwind distance.

HEGADAS output data: concentration variables and temperature as a function of downwind distance and (for transient case) time.

PGPLUME output data: concentration as a function of downwind distance, cross-wind distance and height.

d. Type of Model

HGSYSTEM is made up of four types of dispersion models. HFPLUME and PLUME simulate the near-field dispersion and PGPLUME simulates the passive-gas dispersion downwind of a transition point.

HEGADAS simulates the ground-level heavy-gas dispersion.

e. Pollutant Types

HGSYSTEM may be used to model non-reactive chemicals or hydrogen fluoride.

f. Source-Receptor Relationships

HGSYSTEM estimates the expected area of exposure to concentrations above user-specified threshold values. By imposing conservation of mass, momentum and energy the concentration, density, speed and temperature are evaluated as a function of downwind distance.

g. Plume Behavior

HFPLUME and PLUME: (1) are steady-state models assuming a top-hat profile with cross-section averaged plume variables; and (2) the momentum equation is taken into account for horizontal ambient shear, gravity, ground collision, gravity-slumping pressure forces and ground-surface drag.

HEGADAS: assumes the heavy cloud to move with the ambient wind speed, and adopts a power-law fit of the ambient wind speed for the velocity profile.

PGPLUME: simulates the passive-gas dispersion downwind of a transition point from HFPLUME or PLUME for steady-state and finite duration releases.

h. Horizontal Winds

A power law fit of the ambient wind speed is used.

i. Vertical Wind Speed

Not treated.

j. Horizontal Dispersion

HFPLUME and PLUME: Plume dilution is caused by air entrainment resulting from high plume speeds, trailing vortices in wake of falling plume (before touchdown), ambient turbulence and density stratification. Plume dispersion is assumed to be steady and momentum-dominated, and effects of downwind diffusion and wind meander (averaging time) are not taken into account.

HEGADAS: This model adopts a concentration similarity profile expressed in terms of an unknown center-line ground-level concentration and unknown vertical/cross-wind dispersion parameters. These quantities are determined from a number of basic equations describing gas-mass conservation, air entrainment (empirical law describing vertical top-entrainment in terms of global Richardson number), cross-wind gravity spreading (initial gravity spreading followed by gravity-current collapse) and cross-wind diffusion (Briggs formula).

PGPLUME: This model assumes a Gaussian concentration profile in which the cross-wind and vertical dispersion coefficients are determined by empirical expressions. All unknown parameters in this profile are determined by imposing appropriate matching criteria at the transition point.

k. Vertical Dispersion

See description above.

l. Chemical Transformation

Not treated.

m. Physical Removal

Not treated.

n. Evaluation Studies

PLUME has been validated against field data for releases of liquified propane, and wind tunnel data for buoyant and vertically-released dense plumes. HFPLUME and PLUME have been validated against field data for releases of HF (Goldfish experiments) and propane releases. In addition, the plume rise algorithms have been tested against Hoot, Meroney, and Peterka, Ooms and Petersen databases. HEGADAS has been validated against steady and transient releases of liquid propane and LNG over water (Maplin Sands field data), steady and finite-duration pressurized releases of HF (Goldfish experiments; linked with HFPLUME), instantaneous release of Freon (Thorney Island field data; linked with the box model HEGABOX) and wind tunnel data for steady, isothermal dispersion.

Validation studies are contained in the following references.

McFarlane, K., Prothero, A., Puttock, J.S., Roberts, P.T. and H.W.M. Witlox, 1990. Development and validation of atmospheric dispersion models for ideal gases and hydrogen fluoride, Part I: Technical Reference Manual. Report TNER.90.015. Thornton Research Centre, Shell Research, Chester, England. [EGG 1067–1151] (NTIS No. DE 93–000953)

Witlox, H.W.M., McFarlane, K., Rees, F.J. and J.S. Puttock, 1990. Development and validation of atmospheric dispersion models for ideal gases and hydrogen fluoride, Part II: HGSYSTEM Program User's Manual. Report TNER.90.016. Thornton Research Centre, Shell Research, Chester, England. [EGG 1067–1152] (NTIS No. DE 93–000954)

B.5 HOTMAC/RAPTAD

Reference

Mellor, G.L. and T. Yamada, 1974. A Hierarchy of Turbulence Closure Models for Planetary Boundary Layers. Journal of Atmospheric Sciences, 31: 1791–1806.

Mellor, G.L. and T. Yamada, 1982. Development of a Turbulence Closure Model for Geophysical Fluid Problems. Rev. Geophys. Space Phys., 20: 851–875.

Yamada, T. and S. Bunker, 1988. Development of a Nested Grid, Second Moment Turbulence Closure Model and Application to the 1982 ASCOT Brush Creek Data Simulation. Journal of Applied Meteorology, 27: 562–578.

Availability

For a cost to be negotiated with the model developer, a ¼–inch data cartridge or a 4mm DAT tape containing the HOTMAC/RAPTAD computer codes including pre- and post-processors and hard copies of user manuals (User's Manual, Maintenance Manual, Operations Manual, Maintenance Interface Manual, Topo Manual, and 3–Dimensional Plume Manual) are available from YSA Corporation, Rt. 4 Box 81–A, Santa Fe, NM 87501; Phone: (505) 989–7351; Fax: (505) 989–7965; e-mail: ysa@RT66.com

Abstract

YSA Corporation offers a comprehensive modeling system for environmental studies. The system includes a mesoscale meteorological code, a transport and diffusion code, and extensive Graphical User Interfaces (GUIs). This system is unique because the diffusion code uses time dependent, three-dimensional winds and turbulence distributions that are forecasted by a mesoscale weather prediction model. Consequently the predicted concentration distributions are more accurate than those predicted by traditional models when surface conditions are heterogeneous. In general, the modeled concentration distributions are not Gaussian because winds and turbulence distributions The models were originally developed by using super computers. However, recent advancement of computer hardware has made it possible to run complex three-dimensional meteorological models on desktop workstations. The present versions of the programs are running on super computers and workstations. GUIs are available on Sun Microsystems and Silicon Graphics workstations. The modeling system can also run on a laptop workstation which makes it possible to run the programs in the field or away from the office. As technology continues to advance, a version of HOTMAC/RAPTAD suitable for PC-based platforms will be considered for release by YSA.

HOTMAC, Higher Order Turbulence Model for Atmospheric Circulation, is a mesoscale weather prediction model that forecasts wind, temperature, humidity, and atmospheric turbulence distributions over complex surface conditions. HOTMAC has options to include non-hydrostatic pressure computation, nested grids, land-use distributions, cloud, fog, and precipitation physics. HOTMAC can interface with tower, rawinsonde, and large-scale weather data using a four-dimensional data assimilation method. RAPTAD, Random Puff Transport and Diffusion, is a Lagrangian random puff model that is used to forecast transport and diffusion of airborne materials over complex terrain. Concentrations are computed by summing the concentration of each puff at the receptor location. The random puff method is equivalent to the random particle method with a Gaussian kernel for particle distribution. The advantage of the puff method is the accuracy and speed of computation. The particle method requires the release of a large number of particles which could be computationally expensive. The puff method requires the release of a much less number of puffs, typically 1/10 to 1/100 of the number of particles required by the particle method.

The averaging time for concentration estimates is variable from 5 minutes to 15 minutes for each receptor. In addition to the concentration computation at the receptor sites, RAPTAD computes and graphically displays hourly concentration contours at the ground level. RAPTAD is applicable to point and area sources.

The meteorological data produced from HOTMAC are used as input to RAPTAD. RAPTAD can forecast concentration distributions for neutrally buoyant gas, buoyant gas and denser-than-air gas. The models are significantly advanced in both their model physics and in their operational procedures. GUIs are provided to help the user prepare input files, run programs, and display the modeled results graphically in three dimensions.

a. Recommendation for Regulatory Use

There are no specific recommendations at the present time. The HOTMAC/RAPTAD modeling system may be used on a case-by-case basis.

b. Input Requirements

Meteorological Data: The modeling system is significantly different from the majority of regulatory models in terms of how meteorological data are provided and used in concentration simulations. Regulatory models use the wind data which are obtained directly from measurements or analyzed by using a simple constraint such as a mass conservation equation. Thus, the accuracy of the computation will depend significantly on the quantity and quality of the wind data. This approach is acceptable as long as the study area is flat and the simulation period is short. As the regulations become more stringent and more realistic surface conditions are required, a significantly large volume of meteorological data is required which could become very expensive.

An alternative approach is to augment the measurements with predicted values from a mesoscale meteorological model. This is the approach we have taken here. This approach

has several advantages over the conventional method. First, concentration computations use the model forecast wind while the conventional method extrapolates the observed winds. Extrapolation of wind data over complex terrain and for an extended period of time quickly loses its accuracy. Secondly, the number of stations for upper air soundings is typically limited from none to at most a few stations in the study area. The corresponding number in a mesoscale model is the number of grid points in the horizontal plane which is typically 50 X 50. Consequently, concentration distributions using model forecasted winds would be much more accurate than those obtained by using winds which were extrapolated from the limited number of measurements.

HOTMAC requires meteorological data for initialization and to provide boundary conditions if the boundary conditions change significantly with time. The minimum amount of data required to run HOTMAC is wind and potential temperature profiles at a single station. HOTMAC forecasts wind and turbulence distributions in the boundary layer through a set of model equations for solar radiation, heat energy balance at the ground, conservation of momentum, conservation of internal energy, and conservation of mass.

Terrain Data: HOTMAC and RAPTAD use the digitized terrain data from the U.S. Geological Survey and the Defense Mapping Agency. Extraction of terrain data is greatly simplified by using YSA's GUI software called Topo. The user specifies the latitudes and longitudes of the southwest and northeast corner points of the study area. Then, Topo extracts the digitized elevation data within the area specified and converts from the latitudes and longitudes to the UTM (Universal Transverse Mercator) coordinates for up to three nested grids.

Emission Data: Emission data requirements are emission rate, stack height, stack diameter, stack location, stack gas exit velocity, and stack buoyancy.

Receptor Data: Receptor data requirements are names, location coordinates, and desired averaging time for concentration estimates, which is variable from 5 to 15 minutes.

c. Output

HOTMAC outputs include hourly winds, temperatures, and turbulence variables at every grid point. Ancillary codes graphically display vertical profiles of wind, temperature, and turbulence variables at selected locations and wind vector distributions at specified heights above the ground. These codes also produce graphic files of wind direction projected on vertical cross sections.

RAPTAD outputs include hourly values of surface concentration, time variations of mean and standard deviation of concentrations at selected locations, and coordinates of puff center locations. Ancillary codes produce color contour plots of surface concentration, time variations of mean concentrations and ratios of standard deviation to mean value at selected locations, and concentration distributions in the vertical cross sections. The averaging time of concentration at a receptor location is variable from 5 to 15 minutes. Color contour plots of surface concentration can be animated on the monitor to review time variations of high concentration areas.

d. Type of Model

HOTMAC is a 3-dimensional Eulerian model for weather forecasting, and RAPTAD is a 3-dimensional Lagrangian random puff model for pollutant transport and diffusion.

e. Pollutant types

RAPTAD may be used to model any inert pollutants, including dense and buoyant gases.

f. Source-Receptor Relationship

Up to six point or area sources are specified and up to 50 sampling locations are selected. Source and receptor heights are specified by the user.

g. Plume Behavior

Neutrally buoyant plumes are transported by mean and turbulence winds that are modeled by HOTMAC. Non-neutrally buoyant plume equations are based on Van Dop (1992). In general, plumes are non-Gaussian.

h. Horizontal Winds

RAPTAD uses wind speed, wind direction, and turbulence on a gridded array that is supplied hourly by HOTMAC. Stability effect and mixed layer height are incorporated through the intensity of turbulence which is a function of stability. HOTMAC predicts turbulence intensity by solving a turbulence kinetic energy equation and a length scale equation. RAPTAD interpolates winds and turbulence at puff center locations every 10 seconds from the values on a gridded array. RAPTAD can also use the winds observed at towers and by rawinsondes.

i. Vertical Wind Speed

RAPTAD uses vertical winds on a gridded array that are supplied hourly by HOTMAC. HOTMAC computes vertical wind either by solving an equation of motion for the vertical wind or a mass conservation equation. RAPTAD interpolates vertical winds at puff center locations every 10 seconds from the values on a gridded array.

j. Horizontal Dispersion

Horizontal dispersion is based on the standard deviations of horizontal winds that are computed by HOTMAC.

k. Vertical Dispersion

Vertical dispersion is based on the standard deviations of vertical wind that are computed by HOTMAC.

l. Chemical Transformation

HOTMAC can provide meteorological inputs to other models that handle chemical reactions, e.g., UAM.

m. Physical Removal

Not treated.

n. Evaluation Studies

Yamada, T., S. Bunker and M. Moss, 1992. A Numerical Simulation of Atmospheric Transport and Diffusion over Coastal Complex Terrain. Journal of Applied Meteorology, 31: 565–578.

Yamada, T. and T. Henmi, 1994. HOTMAC: Model Performance Evaluation by Using Project WIND Phase I and II Data. Mesoscale Modeling of the Atmosphere, American Meteorological Society, Monograph 47, pp. 123–135.

B.6 LONGZ

Reference

Bjorklund, J.R. and J.F. Bowers, 1982. User's Instructions for the SHORTZ and LONGZ Computer Programs, Volumes I and II, EPA Publication No. EPA–903/9–82–004. U.S. Environmental Protection Agency, Region III, Philadelphia, PA.

Availability

The computer code is available on the Support Center for Regulatory Air Models Bulletin Board System and on diskette (as PB 96–501994) from the National Technical Information Service (see section B.0).

Abstract

LONGZ utilizes the steady-state univariate Gaussian plume formulation for both urban and rural areas in flat or complex terrain to calculate long-term (seasonal and/or annual) ground-level ambient air concentrations attributable to emissions from up to 14,000 arbitrarily placed sources (stacks, buildings and area sources). The output consists of the total concentration at each receptor due to emissions from each user-specified source or group of sources, including all sources. An option which considers losses due to deposition (see the description of SHORTZ) is deemed inappropriate by the authors for complex terrain, and is not discussed here.

a. Recommendations for Regulatory Use

LONGZ can be used if it can be demonstrated to estimate concentrations equivalent to those provided by the preferred model for a given application. LONGZ must be executed in the equivalent mode.

LONGZ can be used on a case-by-case basis in lieu of a preferred model if it can be demonstrated, using the criteria in section 3.2 of appendix W, that LONGZ is more appropriate for the specific application. In this case the model options/modes which are most appropriate for the application should be used.

b. Input Requirements

Source data requirements are: for point, building or area sources, location, elevation, total emission rate (optionally classified by gravitational settling velocity) and decay coefficient; for stack sources, stack height, effluent temperature, effluent exit velocity, stack radius (inner), emission rate, and ground elevation (optional); for building sources, height, length and width, and orientation; for area sources, characteristic vertical dimension, and length, width and orientation.

Meteorological data requirements are: wind speed and measurement height, wind profile exponents, wind direction standard deviations (turbulent intensities), mixing height, air temperature, vertical potential temperature gradient.

Receptor data requirements are: coordinates, ground elevation.

c. Output

Printed output includes total concentration due to emissions from user-specified source groups, including the combined emissions from all sources (with optional allowance for depletion by deposition).

d. Type of Model

LONGZ is a climatological Gaussian plume model.

e. Pollutant Types

LONGZ may be used to model primary pollutants. Settling and deposition are treated.

f. Source-Receptor Relationships

LONGZ applies user specified locations for sources and receptors. Receptors are assumed to be at ground level.

g. Plume Behavior

Plume rise equations of Bjorklund and Bowers (1982) are used.

Stack tip downwash (Bjorklund and Bowers, 1982) is included.

All plumes move horizontally and will fully intercept elevated terrain.

Plumes above mixing height are ignored.

Perfect reflection at mixing height is assumed for plumes below the mixing height.

Plume rise is limited when the mean wind at stack height approaches or exceeds stack exit velocity.

Perfect reflection at ground is assumed for pollutants with no settling velocity.

Zero reflection at ground is assumed for pollutants with finite settling velocity.

LONGZ does not simulate fumigation.

Tilted plume is used for pollutants with settling velocity specified.

Buoyancy-induced dispersion is treated (Briggs, 1972).

h. Horizontal Winds

Wind field is homogeneous and steady-state.

Wind speed profile exponents are functions of both stability class and wind speed. Default values are specified in Bjorklund and Bowers (1982).

i. Vertical Wind Speed

Vertical wind speed is assumed equal to zero.

j. Horizontal Dispersion

Pollutants are initially uniformly distributed within each wind direction sector. A smoothing function is then used to remove discontinuities at sector boundaries.

k. Vertical Dispersion

Vertical dispersion is derived from input vertical turbulent intensities using adjustments to plume height and rate of plume growth with downwind distance specified in Bjorklund and Bowers (1982).

l. Chemical Transformation

Chemical transformations are treated using exponential decay. Time constant is input by the user.

m. Physical Removal

Gravitational settling and dry deposition of particulates are treated.

n. Evaluation Studies

Bjorklund, J.R. and J.F. Bowers, 1982. User's Instructions for the SHORTZ and LONGZ Computer Programs, Volume I and II. EPA Publication No. EPA–903/9–82–004. U.S. Environmental Protection Agency, Region III, Philadelphia, PA.

B.7 Maryland Power Plant Siting Program (PPSP) Model

Reference

Brower, R., 1982. The Maryland Power Plant Siting Program (PPSP) Air Quality Model User's Guide. Ref. No. PPSP–MP–38. Prepared for Maryland Department of Natural Resources by Environmental Center, Martin Marietta Corporation, Baltimore, MD. (NTIS No. PB 82–238387)

Weil, J.C. and R.P. Brower, 1982. The Maryland PPSP Dispersion Model for Tall Stacks. Ref. No. PPSP–MP–36. Prepared for Maryland Department of Natural Resources by Environmental Center, Martin Marietta Corporation, Baltimore, MD. (NTIS No. PB 82–219155)

Availability

The model code and test data are available on diskette for a nominal cost to defray shipping and handling charges from: Mr. Roger Brower, Versar, Inc., 9200 Rumsey Road, Columbia, MD 21045; Phone: (410) 964–9299.

Abstract

PPSP is a Gaussian dispersion model applicable to tall stacks in either rural or urban areas, but in terrain that is essentially flat (on a scale large compared to the ground roughness elements). The PPSP model follows the same general formulation and computer coding as CRSTER, also a Gaussian model, but it differs in four major ways. The differences are in the scientific formulation of specific ingredients or ''sub-models'' to the Gaussian model, and are based on recent theoretical improvements as well as supporting experimental data. The differences are: (1) stability during daytime is based on convective scaling instead of the Turner criteria; (2) Briggs' dispersion curves for elevated sources are used; (3) Briggs plume rise formulas for convective conditions are included; and (4) plume penetration of elevated stable layers is given by Briggs' (1984) model.

a. Recommendations for Regulatory Use

PPSP can be used if it can be demonstrated to estimate concentrations equivalent to those provided by the preferred model for a given application. PPSP must be executed in the equivalent mode.

PPSP can be used on a case-by-case basis in lieu of a preferred model if it can be demonstrated, using the criteria in section 3.2 of appendix W, that PPSP is more appropriate for the specific application. In this case the model options/modes which are most appropriate for the application should be used.

b. Input Requirements

Source data requirements are: emission rate (monthly rates optional), physical stack height, stack gas exit velocity, stack inside diameter, stack gas temperature.

Meteorological data requirements are: hourly surface weather data from the EPA meteorological preprocessor program.

Preprocessor output includes hourly stability class, wind direction, wind speed, temperature, and mixing height. Actual anemometer height (a single value) is also required. Wind speed profile exponents (one for each stability class) are required if on-site data are input.

Receptor data requirements are: distance of each of the five receptor rings.

c. Output

Printed output includes:

Highest and second highest concentrations for the year at each receptor for averaging times of 1, 3, and 24-hours, plus a user-selected averaging time which may be 2, 4, 6, 8, or 12 hours;

Annual arithmetic average at each receptor; and

For each day, the highest 1-hour and 24-hour concentrations over the receptor field.

d. Type of Model

PPSP is a Gaussian plume model.

e. Pollutant Types

PPSP may be used to model primary pollutants. Settling and deposition are not treated.

f. Source-Receptor Relationship

Up to 19 point sources are treated.

All point sources are assumed at the same location.

Unique stack height and stack exit conditions are applied for each source.

Receptor locations are restricted to 36 azimuths (every 10 degrees) and five user-specified radial distances.

g. Plume Behavior

Briggs (1975) final rise formulas for buoyant plumes are used. Momentum rise is not considered.

Transitional or distance-dependent plume rise is not modeled.

Penetration (complete, partial, or zero) of elevated inversions is treated with Briggs (1984) model; ground-level concentrations are dependent on degree of plume penetration.

h. Horizontal Winds

Wind speeds are corrected for release height based on power law variation, with different exponents for different stability classes and variable reference height (7 meters is default). Wind speed power law exponents are 0.10, 0.15, 0.20, 0.25, 0.30, and 0.30 for stability classes A through F, respectively.

Constant, uniform (steady-state) wind assumed within each hour.

i. Vertical Wind Speed

Vertical wind speed is assumed equal to zero.

j. Horizontal Dispersion

Rural dispersion parameters are Briggs (Gifford, 1975), with stability class defined by u/w* during daytime, and by the method of Turner (1964) at night.

Urban dispersion is treated by changing all stable cases to stability class D.

Buoyancy-induced dispersion (Pasquill, 1976) is included (using $\Delta H/3.5$).

k. Vertical Dispersion

Rural dispersion parameters are Briggs (Gifford, 1975), with stability class defined by u/w* during daytime, and by the method of Turner (1964).

Urban dispersion is treated by changing all stable cases to stability class D.

Buoyancy-induced dispersion (Pasquill, 1976) is included (using $\Delta H/3.5$).

l. Chemical Transformation

Not treated.

m. Physical Removal

Not treated.

n. Evaluation Studies

Londergan, R., D. Minott, D. Wackter, T. Kincaid and D. Bonitata, 1983. Evaluation of Rural Air Quality Simulation Models, Appendix G: Statistical Tables for PPSP. EPA Publication No. EPA–450/4–83–003. Environmental Protection Agency, Research Triangle Park, NC.

Weil, J.C. and R.P. Brower, 1982. The Maryland PPSP dispersion model for tall stacks. Ref. No. PPSP MP–36. Prepared for Maryland Department of Natural Resources. Prepared by Environmental Center, Martin Marietta Corporation, Baltimore, Maryland. (NTIS No. PB 82–219155)

B.8 Mesoscale Puff Model (MESOPUFF II)

Reference

Scire, J.S., F.W. Lurmann, A. Bass and S.R. Hanna, 1984. User's Guide to the Mesopuff II Model and Related Processor Programs. EPA Publication No. EPA–600/8–84–013. U.S. Environmental Protection Agency, Research Triangle Park, NC. (NTIS No. PB 84–181775)

A Modeling Protocol for Applying MESOPUFF II to Long Range Transport Problems, 1992. EPA Publication No. EPA–454/R–92–021. U.S. Environmental Protection Agency, Research Triangle Park, NC.

Availability

This model code is available on the Support Center for Regulatory Air Models Bulletin Board System and also on diskette (as PB 93–500247) from the National Technical Information Service (see section B.0).

Abstract

MESOPUFF II is a short term, regional scale puff model designed to calculate concentrations of up to 5 pollutant species (SO_2, SO_4, NO_X, HNO_3, NO_3). Transport, puff growth, chemical transformation, and wet and dry deposition are accounted for in the model.

a. Recommendations for Regulatory Use

There is no specific recommendation at the present time. The model may be used on a case-by-case basis.

b. Input Requirements

Required input data include four types: (1) input control parameters and selected technical options, (2) hourly surface meteorological data and twice daily upper air measurements, hourly precipitation data are optional, (3) surface land use classification information, (4) source and emissions data.

Data from up to 25 surface National Weather Service stations and up to 10 upper air stations may be considered. Spatially variable fields at hour intervals of winds, mixing height, stability class, and relevant turbulence parameters are derived by MESOPAC II, the meteorological preprocessor program described in the User Guide.

Source and emission data for up to 25 point sources and/or up to 5 area sources can be included. Required information are: location in grid coordinates, stack height, exit velocity and temperature, and emission rates for the pollutant to be modeled.

Receptor data requirements: up to a 40×40 grid may be used and non-gridded receptor locations may be considered.

c. Output

Line printer output includes: all input parameters, optionally selected arrays of ground-level concentrations of pollutant species at specified time intervals.

Line printer contour plots output from MESOFILE II post-processor program. Computer readable output of concentration array to disk/tape for each hour.

d. Type of Model

MESOPUFF II is a Gaussian puff superposition model.

e. Pollutant Types

Up to five pollutant species may be modeled simultaneously and include: SO_2, SO_4, NO_X, HNO_3, NO_3.

f. Source-Receptor Relationship

Up to 25 point sources and/or up to 5 area sources are permitted.

g. Plume Behavior

Briggs (1975) plume rise equations are used, including plume penetration with buoyancy flux computed in the model.

Fumigation of puffs is considered and may produce immediate mixing or multiple reflection calculations at user option.

h. Horizontal Winds

Gridded wind fields are computed for 2 layers; boundary layer and above the mixed layer. Upper air rawinsonde data and hourly surface winds are used to obtain spatially variable u,v component fields at hourly intervals. The gridded fields are computed by interpolation between stations in the MESOPAC II preprocessor.

i. Vertical Wind Speed

Vertical winds are assumed to be zero.

j. Horizontal Dispersion

Incremental puff growth is computed over discrete time steps with horizontal growth parameters determined from power law equations fit to sigma y curves of Turner out to 100km. At distances greater than 100km, puff growth is determined by the rate given by Heffter (1965).

Puff growth is a function of stability class and changes in stability are treated. Optionally, user input plume growth coefficients may be considered.

k. Vertical Dispersion

For puffs emitted at an effective stack height which is less than the mixing height, uniform mixing of the pollutant within the mixed layer is performed. For puffs centered above the mixing height, no effect at the ground occurs.

l. Chemical Transformation

Hourly chemical rate constants are computed from empirical expressions derived from photochemical model simulations.

m. Physical Removal

Dry deposition is treated with a resistance method.

Wet removal may be considered if hourly precipitation data are input.

n. Evaluation Studies

Results of tests for some model parameters are discussed in:

Scire, J.S., F.W. Lurmann, A. Bass and S.R. Hanna, 1984. Development of the MESOPUFF II Dispersion Model. EPA Publication No. EPA–600/3–84–057. U.S. Environmental Protection Agency, Research Triangle Park, NC.

B.9 Mesoscale Transport Diffusion and Deposition Model for Industrial Sources (MTDDIS)

Reference

Wang, I.T. and T.L. Waldron, 1980. User's Guide for MTDDIS Mesoscale Transport, Diffusion, and Deposition Model for Industrial Sources. EMSC6062.1UR(R2). Combustion Engineering, Newbury Park, CA.

Availability

A diskette copy of the FORTRAN coding and the user's guide are available for a cost of $100 from: Dr. I. T. Wang, Environmental Modeling & Analysis, 2219 E. Thousand Oaks Blvd., Suite 435, Thousand Oaks, CA 91362.

Abstract

MTDDIS is a variable-trajectory Gaussian puff model applicable to long-range transport of point source emissions over level or rolling terrain. The model can be used to determine 3-hour maximum and 24-hour average concentrations of relatively nonreactive pollutants from up to 10 separate stacks.

a. Recommendations for Regulatory Use

There is no specific recommendation at the present time. The MTDDIS Model may be used on a case-by-case basis.

b. Input Requirements

Source data requirements are: emission rate, physical stack height, stack gas exit velocity, stack inside diameter, stack gas temperature, and location.

Meteorological data requirements are: hourly surface weather data, from up to 10 stations, including cloud ceiling, wind direction, wind speed, temperature, opaque cloud cover and precipitation. For long-range applications, user-analyzed daily mixing heights are recommended. If these are not available, the NWS daily mixing heights will be used by the program. A single upper air sounding station for the region is assumed. For each model run, air trajectories are generated for a 48-hour period, and therefore, the afternoon mixing height of the day before and the mixing heights of the day after are also required by the model as input, in order to generate hourly mixing heights for the modeled period.

Receptor data requirements are: up to three user-specified rectangular grids.

c. Output

Printed output includes:

Tabulations of hourly meteorological parameters include both input surface observations and calculated hourly stability classes and mixing heights for each station;

Printed air trajectories for the two consecutive 24-hour periods for air parcels generated 4 hours apart starting at 0000 LST; and

3-hour maximum and 24-hour average grid concentrations over user-specified rectangular grids are output for the second 24-hour period.

d. Type of Model

MTDDIS is a Gaussian puff model.

e. Pollutant Types

MTDDIS can be used to model primary pollutants. Dry deposition is treated. Exponential decay can account for some reactions.

f. Source-Receptor Relationship

MTDDIS treats up to 10 point sources.

Up to three rectangular receptor grids may be specified by the user.

g. Plume Behavior

Briggs (1971, 1972) plume rise formulas are used.

If plume height exceeds mixing height, ground level concentration is assumed zero.

Fumigation and downwash are not treated.

h. Horizontal Winds

Wind speeds and wind directions at each station are first corrected for release height. Speed conversions are based on power law variation and direction conversions are based on linear height dependence as recommended by Irwin (1979b).

Converted wind speeds and wind directions are then weighted according to the algorithms of Heffter (1980) to calculate the effective transport wind speed and direction.

i. Vertical Wind Field

Vertical wind speed is assumed equal to zero.

j. Horizontal Dispersion

Transport-time-dependent dispersion coefficients from Heffter (1980) are used.

k. Vertical Dispersion

Transport-time-dependent dispersion coefficients from Heffter (1980) are used.

l. Chemical Transformation

Chemical transformations are treated using exponential decay. Half-life is input by the user.

m. Physical Removal

Dry deposition is treated. User input deposition velocity is required.

Wet deposition is treated. User input hourly precipitation rate and precipitation layer depth or cloud ceiling height are required.

n. Evaluation Studies

Carhart, R.A., A.J. Policastro, M. Wastag and L. Coke, 1989. Evaluation of Eight Short-Term Long-Range Transport Models Using Field Data. Atmospheric Environment, 23: 85–105.

B.10 Multi-Source (SCSTER) Model

Reference

Malik, M.H. and B. Baldwin, 1980. Program Documentation for Multi-Source (SCSTER) Model. Program Documentation EN7408SS. Southern Company Services, Inc., Technical Engineering Systems, 64 Perimeter Center East, Atlanta, GA.

Availability

The SCSTER model and user's manual are available at no charge on a limited basis through Southern Company Services. The computer code may be provided on a diskette. Requests should be directed to: Mr. Stanley S. Vasa, Senior Environmental Specialist, Southern Company Services, P.O. Box 2625, Birmingham, AL 35202.

Abstract

SCSTER is a modified version of the EPA CRSTER model. The primary distinctions of SCSTER are its capability to consider multiple sources that are not necessarily collocated, its enhanced receptor specifications, its variable plume height terrain adjustment procedures and plume distortion from directional wind shear.

a. Recommendations for Regulatory Use

SCSTER can be used if it can be demonstrated to estimate concentrations equivalent to those provided by the preferred model for a given application. SCSTER must be executed in the equivalent mode.

SCSTER can be used on a case-by-case basis in lieu of a preferred model if it can be demonstrated, using the criteria in section 3.2 of appendix W, that SCSTER is more appropriate for the specific application. In this case the model options/modes which are most appropriate for the application should be used.

b. Input Requirements

Source data requirements are: emission rate, stack gas exit velocity, stack gas temperature, stack exit diameter, physical stack height, elevation of stack base, and coordinates of stack location. The variable emission data can be monthly or annual averages.

Meteorological data requirements are: hourly surface weather data from the EPA meteorological preprocessor program. Preprocessor output includes hourly stability class wind direction, wind speed, temperature, and mixing height. Actual anemometer height (a single value) is optional. Wind speed profile exponents (one for each stability class) are optional.

Receptor data requirements are: cartesian coordinates and elevations of individual receptors; distances of receptor rings, with elevation of each receptor; receptor grid networks, with elevation of each receptor.

Any combination of the three receptor input types may be used to consider up to 600 receptor locations.

c. Output

Printed output includes:

Highest and second highest concentrations for the year at each receptor for averaging times of 1-, 3-, and 24-hours, a user-selected averaging time which may be 2–12 hours, and a 50 high table for 1-, 3-, and 24-hours;

Annual arithmetic average at each receptor; and the highest 1-hour and 24-hour concentrations over the receptor field for each day considered.

Optional tables of source contributions of individual point sources at up to 20 receptor locations for each averaging period;

Optional magnetic tape output in either binary or fixed block format includes:

All 1-hour concentrations.

Optional card/disk output includes for each receptor:

Receptor coordinates; receptor elevation; highest and highest, second-highest, 1-, 3-, and 24-hour concentrations; and annual average concentration.

d. Type of Model

SCSTER is a Gaussian plume model.

e. Pollutant Types

SCSTER may be used to model primary pollutants. Settling and deposition are not treated.

f. Source-Receptor Relationship

SCSTER can handle up to 60 separate stacks at varying locations and up to 600 receptors, including up to 15 receptor rings.

User input topographic elevation for each receptor is used.

g. Plume Behavior

SCSTER uses Briggs (1969, 1971, 1972) final plume rise formulas.

Transitional plume rise is optional.

SCSTER contains options to incorporate wind directional shear with a plume distortion method described in appendix A of the User's Guide.

SCSTER provides four terrain adjustments including the CRSTER full terrain height adjustment and a user-input, stability-dependent plume path coefficient adjustment for receptors above stack height.

h. Horizontal Winds

Wind speeds are corrected for release height based on power law exponents from DeMarrais (1959), different exponents for different stability classes; default reference height of 7m. Default exponents are 0.10, 0.15, 0.20, 0.25, 0.30, and 0.30 for stability classes A through F, respectively.

Steady-state wind is assumed within a given hour.

Optional consideration of plume distortion due to user-input, stability-dependent wind-direction shear gradients.

i. Vertical Wind Speed

Vertical wind speed is assumed equal to zero.

j. Horizontal Dispersion

Rural dispersion coefficients from Turner (1969) are used.

Six stability classes are used.

k. Vertical Dispersion

Rural dispersion coefficients from Turner (1969) are used.

Six stability classes are used.

An optional test for plume height above mixing height before terrain adjustment is included.

l. Chemical Transformation

Chemical transformations are treated using exponential decay. Half-life is input by the user.

m. Physical Removal

Physical removal is treated using exponential decay. Half-life is input by the user.

n. Evaluation Studies

Londergan, R., D. Minott, D. Wackter, T. Kincaid and D. Bonitata, 1983. Evaluation of Rural Air Quality Simulation Models. EPA Publication No. EPA–450/4–83–003. U.S. Environmental Protection Agency, Research Triangle Park, NC.

B.11 PANACHE

Reference

Transoft Group, 1994. User's Guide of Fluidyn-PANACHE, a Three-Dimensional Deterministic Simulation of Pollutants Dispersion Model for Complex Terrain; Cary, North Carolina.

Availability

For a cost to be negotiated with the model developer, the computer code is available from: Transoft US, Inc., 818 Reedy Creek Road, Cary, NC 27513–3307; Phone: (919) 380–7500, Fax: (919) 380–7592.

Abstract

PANACHE is an Eulerian (and Lagrangian for particulate matter), 3-dimensional finite volume fluid mechanics code designed to simulate continuous and short-term pollution dispersion in the atmosphere, in simple or complex terrain. For single or multiple sources, pollutant emissions from stack, point, area, volume, general sources and distant sources are treated. The model automatically treats obstacles, effects of vegetation and water bodies, the effects of vertical temperature stratification on the wind and diffusion fields, and turbulent shear flows caused by atmospheric boundary layer or terrain effects. The code solves Navier Stokes equations in a curvilinear mesh espousing the terrain and obstacles. A 2nd order resolution helps keep the number of cells limited in case of shearing flow. An initial wind field is computed by using a Lagrangian multiplier to interpolate wind data collected on site. The mesh generator, the solver and the numerical schemes have been adopted for atmospheric flows with or without chemical reactions. The model code operates on any workstation or IBM—compatible PC (486 or higher). Gaussian and puff modes are available in PANACHE for fast, preliminary simulation.

a. Recommendations for Regulatory Use

On a case-by-case basis, PANACHE may be appropriate for the following types of situations: industrial or urban zone on a flat or complex terrain, transport distance from a few meters to 50km, continuous releases with hourly, monthly or annual averaging times, chemically reactive or non-reactive gases or particulate emissions for stationary or roadway sources.

b. Input Requirements

Data may be input directly from an external source (e.g., GIS file) or interactively. The model provides the option to use default values when input parameters are unavailable.

PANACHE user environment integrates the pre- and post-processor with the solver. The calculations can be done interactively or in batch mode. An inverse scheme is provided to estimate missing data from a few measured values of the wind.

Terrain data requirements:

- Location, surface roughness estimates, and altitude contours.
- Location and dimensions of obstacles, forests, fields, and water bodies.

Source data requirements:

For all types of sources, the exit temperature and plume mass flow rates and concentration of each of the pollutants are required. External sources require mass flow rate. For roadways, estimated traffic volume and vehicular emissions are required.

Meteorological data requirements:

Hourly stability class, wind direction, wind speed, temperature, cloud cover, humidity, and mixing height data with lapse rate below and above it.

Primary meteorological variables available from the National Weather Service can be processed using PCRAMMET (see section 9.3.3.2 of appendix W) to an input file.

Data required at the domain boundary:

Wind profile (uniform, log or power law), depending on the terrain conditions (e.g., residential area, forest, sea, etc.).

Chemical source data requirements:

A database of selected species with specific heats and molecular weights can be extended by the user. For heavy gases the database includes a compressibility coefficients table.

Solar reflection:

For natural convection simulation with low wind on a sunny day, approximate values of temperature for fields, forests, water bodies, shadows and their variations with the time of the day are determined automatically.

c. Output

Printed output option: pollutant concentration at receptor points, and listing of input data (terrain, chemical, weather, and source data) with turbulence and precision control data.

Graphical output includes: In 3-dimensional perspective or in any crosswind, downwind or horizontal plane: wind velocity, pollutant concentration, 3-dimensional isosurface. The profile of concentration can be obtained along any line on the terrain. The concentration contours can be either instantaneous or time integrated for the emission from a source or a source combination. A special utility is included to help prepare a report or a video animation. The user can select images, put in annotations, or do animation.

d. Type of Model

The model uses an Eulerian (and Lagrangian for particulate matter) 3-dimensional finite volume model solving full Navier-Stokes equations. The numerical diffusion is low with appropriate turbulence models for building wakes. A second order resolution may be sought to limit the diffusion. Gaussian and puff modes are available. The numerical scheme is self adaptive for the following situations:

- A curvilinear mesh or a chopped Cartesian mesh is generated automatically or manually;
- Thermal and gravity effects are simulated by full gravity (heavy gases), no gravity (well mixed light gases at ambient temperature), and Boussinesq approximation methods;
- K-diff, K-e or a boundary layer turbulence models are used for turbulence calculations. The flow behind obstacles such as buildings, is calculated by using a modified K-e.
- For heavy gases, a 3-dimensional heat conduction from the ground and a stratification model for heat exchange from the atmosphere are used (with anisotropic turbulence).
- If local wind data are available, an initial wind field with terrain effects can be computed using a Lagrangian multiplier, which substantially reduces computation time.

e. Pollutant Types

- Scavenging, Acid Rain: A module for water droplets traveling through a plume considers the absorption and de-absorption effects of the pollutants by the droplet. Evaporation and chemical reactions with gases are also taken into account.
- Visibility: Predicts plume visibility and surface deposition of aerosol.
- Particulate matter: Calculates settling and dry deposition of particles based on a Probability Density Function (PDF) of their diameters. The exchange of mass, momentum and heat between particles and gas is treated with implicit coupling procedures.
- Ozone formation and dispersion: The photochemical model computes ozone formation and dispersion at street level in the presence of sunlight.
- Roadway Pollutants: Accounts for heat and turbulence due to vehicular movement. Emissions are based on traffic volume and emission factors.
- Odor Dispersion: Identifies odor sources for waste water plants.
- Radon Dispersion: Simulates natural radon accumulation in valleys and mine environments.

PANACHE may also be used in emergency planning and management for episodic emissions, and fire and soot spread in forested and urban areas or from combustible pools.

f. Source-Receptor Relationship

Simultaneous use of multiple kinds of sources at user defined locations. Any number of user defined receptors can identify pollutants from each source individually.

g. Plume Behavior

The options influencing the behavior are full gravity, Boussinesq approximation or no gravity.

h. Horizontal Winds

Horizontal wind speed approximations are made only at the boundaries based on National Weather Service data. Inside the domain of interest, full Navier-Stokes resolution with natural viscosity is used for 3-dimensional terrain and temperature dependent wind field calculation.

i. Vertical Wind Speed

Vertical wind speed approximations are made only at the boundaries based on National Weather Service data. The domain of interest is treated as for horizontal winds.

j. Horizontal Dispersion

Diffusion is calculated using appropriate turbulence models. A 2nd order solution for shearing flow can be sought when the number of meshes is limited between obstacles.

k. Vertical Dispersion

Dispersion by full gravity unless Boussinesq approximation or no gravity requested. Vertical dispersion is treated as above for horizontal dispersion.

l. Chemical Transformation

PANCHEM, an atmospheric chemistry module for chemical reactions, is available. Photochemical reactions are used for tropospheric ozone calculations.

m. Physical Removal

Physical removal is treated using dry deposition coefficients

n. Evaluation Studies

Goldwire, H.C. Jr, T.G. McRae, G.W. Johnson, D.L. Hipple, R.P. Koopman, J.W. McClure, L.K. Morris and R.T. Cederhall, 1985. Desert Tortoise Series Data Report: 1983 Pressurized Ammonia Spills. UCID 20562, Lawrence Livermore National Laboratory; Livermore, California.

Green, S.R., 1992. Modeling Turbulent Air Flow in a Stand of Widely Spaced Trees, The PHOENICS Journal of Computational Fluid Dynamics and Its Applications, 5: 294–312.

Gryning, S.E. and E. Lyck, 1984. Atmospheric Dispersion from Elevated Sources in an Urban Area: Comparison Between Tracer Experiments and Model Calculations. Journal of Climate and Applied Meteorology, 23: 651–660.

Havens, J., T. Spicer, H. Walker and T. Williams, 1995. Validation of Mathematical Models Using Wind-Tunnel Data Sets for Dense Gas Dispersion in the Presence of Obstacles. University of Arkansas, 8th International Symposium-Loss Prevention and Safety Promotion in the Process Industries; Antwerp, Belgium.

McQuaid, J. (ed), 1985. Heavy Gas Dispersion Trials at Thorney Island. Proc. of a Symposium held at the University of Sheffield, Great Britain.

Pavitskiy, N.Y., A.A. Yakuskin and S.V. Zhubrin, 1993. Vehicular Exhaust Dispersion Around Group of Buildings. The PHOENICS Journal of Computational Fluid Dynamics and Its Applications, 6: 270–285.

Tripathi, S., 1994. Evaluation of Fluidyn-PANACHE on Heavy Gas Dispersion Test Case. Seminar on Evaluation of Models of Heavy Gas Dispersion Organized by European Commission; Mol, Belgium.

B.12 Plume Visibility Model (PLUVUE II)

Reference

Environmental Protection Agency, 1992. User's Manual for the Plume Visibility Model, PLUVUE II (Revised). EPA Publication No. EPA–454/B–92–008, (NTIS PB93–188233). U.S. Environmental Protection Agency, Research Triangle Park, NC.

Availability

This model code is available on the Support Center for Regulatory Air Models Bulletin Board System and also on diskette (as PB 90–500778) from the National Technical Information Service (see section B.0).

Abstract

The Plume Visibility Model (PLUVUE II) is used for estimating visual range reduction and atmospheric discoloration caused by plumes consisting of primary particles, nitrogen oxides and sulfur oxides emitted from a single emission source. PLUVUE II uses Gaussian formulations to predict transport and dispersion. The model includes chemical reactions, optical effects and surface deposition. Four types of optics calculations are made: horizontal and non-horizontal views through the plume with a sky viewing background; horizontal views through the plume with white, gray and black viewing backgrounds; and horizontal views along the axis of the plume with a sky viewing background.

a. Recommendations for Regulatory Use

The Plume Visibility Model (PLUVUE II) may be used on a case-by-case basis as a third level screening model. When applying PLUVUE II, the following precautions should be taken:

1. Treat the optical effects of NO_2 and particles separately as well as together to avoid cancellation of NO_2 absorption with particle scattering.

2. Examine the visual impact of the plume in 0.1 (or 0), 0.5, and 1.0 times the expected level of particulate matter in the background air.

3. Examine the visual impact of the plume over the full range of observer-plume sun angles.

4. The user should consult the appropriate Federal Land Manager when using PLUVUE II to assess visibility impacts in a Class I area.

b. Input Requirements

Source data requirements are: location and elevation; emission rates of SO_2, NO_X, and particulates; flue gas flow rate, exit velocity, and exit temperature; flue gas oxygen content; properties (including density, mass median and standard geometric deviation of radius) of the emitted aerosols in the accumulation (0.1–1.0μm) and coarse (1.0–10.μm) size modes; and deposition velocities for SO_2, NO_X, coarse mode aerosol, and accumulations mode aerosol.

Meteorological data requirements are: stability class, wind direction (for an observer-based run), wind speed, lapse rate, air temperature, relative humidity, and mixing height.

Other data requirements are: ambient background concentrations of NO_X, NO_2, O_3, and SO_2, and background visual range of sulfate and nitrate concentrations.

Receptor (observer) data requirements are: location, terrain elevation at points along plume trajectory, white, gray, and black viewing backgrounds, the distance from the observer to the terrain observed behind the plume.

c. Output

Printed output includes plume concentrations and visual effects at specified downwind distances for calculated or specified lines of sight.

d. Type of Model

PLUVUE II is a Gaussian plume model. Visibility impairment is quantified once the spectral light intensity has been calculated for the specific lines of sight. Visibility impairment includes visual range reduction, plume contrast, relative coloration of a plume to its viewing background, and plume perceptibility due to its contrast and color with respect to a viewing background.

e. Pollutant Types

PLUVUE II treats NO, NO_2, SO_2, H_2SO_4, HNO_3, O_3, primary and secondary particles to calculate effects on visibility.

f. Source Receptor Relationship

For performing the optics calculations at selected points along the plume trajectory, PLUVUE II has two modes: plume based and observer based calculations. The major difference is the orientation of the viewer to the source and the plume.

g. Plume Behavior

Briggs (1969, 1971, 1972) final plume rise equations are used.

h. Horizontal Winds

User-specified wind speed (and direction for an observer-based run) are assumed constant for the calculation.

i. Vertical Wind Speed

Vertical wind speed is assumed equal to zero.

j. Horizontal Dispersion

Constant, uniform (steady-state) wind is assumed for each hour. Straight line plume transport is assumed to all downwind distances.

k. Vertical Dispersion

Rural dispersion coefficients from Turner (1969) are used, with no adjustment for surface roughness. Six stability classes are used.

l. Chemical Transformation

The chemistry of NO, NO_2, O_3, OH, $O(^1D)$, SO_2, HNO_3, and H_2SO_4 is treated by means of nine reactions. Steady state approximations are used for radicals and for the $NO/NO_2/O_3$ reactions.

m. Physical Removal

Dry deposition of gaseous and particulate pollutants is treated using deposition velocities.

n. Evaluation Studies

Bergstrom, R.W., C. Seigneur, B.L. Babson, H.Y. Holman and M.A. Wojcik, 1981. Comparison of the Observed and Predicted Visual Effects Caused by Power Plant Plumes. Atmospheric Environment, 15: 2135–2150.

Bergstrom, R.W., Seigneur, C.D. Johnson and L.W. Richards, 1984. Measurements and Simulations of the Visual Effects of Particulate Plumes. Atmospheric Environment, 18(10): 2231–2244.

Seigneur, C., R.W. Bergstrom and A.B. Hudischewskyj, 1982. Evaluation of the EPA PLUVUE Model and the ERT Visibility Model Based on the 1979 VISTTA Data Base. EPA Publication No. EPA–450/4–82–008. U.S. Environmental Protection Agency, Research Triangle Park, NC.

White, W.H., C. Seigneur, D.W. Heinold, M.W. Eltgroth, L.W. Richards, P.T. Roberts, P.S. Bhardwaja, W.D. Conner and W.E. Wilson, Jr, 1985. Predicting the Visibility of Chimney Plumes: An Inter-comparison of Four Models with Observations at a Well-Controlled Power Plant. Atmospheric Environment, 19: 515–528.

B.13 Point, Area, Line Source Algorithm (PAL–DS)

Reference

Petersen, W.B, 1978. User's Guide for PAL—A Gaussian-Plume Algorithm for Point, Area, and Line Sources. EPA Publication No. EPA–600/4–78–013. Office of Research and Development, Research Triangle Park, NC. (NTIS No. PB 281306)

Rao, K.S. and H.F. Snodgrass, 1982. PAL–DS Model: The PAL Model Including Deposition and Sedimentation. EPA Publication No. EPA–600/8–82–023. Office of Research and Development, Research Triangle Park, NC. (NTIS No. PB 83–117739)

Availability

The computer code is available on diskette (as PB 90–500802) from the National Technical Information Service (see section B.0).

Abstract

PAL–DS is an acronym for this point, area, and line source algorithm and is a method of estimating short-term dispersion using Gaussian-plume steady-state assumptions. The algorithm can be used for estimating concentrations of non-reactive pollutants at 99 receptors for averaging times of 1 to 24 hours, and for a limited number of point, area, and line sources (99 of each type). This algorithm is not intended for application to entire urban areas but is intended, rather, to assess the impact on air quality, on scales of tens to hundreds of meters, of portions of urban areas such as shopping centers, large parking areas, and airports. Level terrain is assumed. The Gaussian point source equation estimates concentrations from point sources after determining the effective height of emission and the upwind and crosswind distance of the source from the receptor. Numerical integration of the Gaussian point source equation is used to determine concentrations from the four types of line sources. Subroutines are included that estimate concentrations for multiple lane line and curved path sources, special line sources (line sources with endpoints at different heights above ground), and special curved path sources. Integration over the area source, which includes edge effects from the source region, is done by considering finite line sources perpendicular to the wind at intervals upwind from the receptor. The crosswind integration is done analytically; integration upwind is done numerically by successive approximations.

The PAL–DS model utilizes Gaussian plume-type diffusion-deposition algorithms based on analytical solutions of a gradient-transfer model. The PAL–DS model can treat deposition of both gaseous and suspended particulate pollutants in the plume since gravitational settling and dry deposition of the particles are explicitly accounted for. The analytical diffusion-deposition expressions listed in this report in the limit when pollutant settling and deposition velocities are zero, they reduce to the usual Gaussian plume diffusion algorithms in the PAL model.

a. Recommendations for Regulatory Use

PAL–DS can be used if it can be demonstrated to estimate concentrations equivalent to those provided by the preferred model for a given application. PAL–DS must be executed in the equivalent mode.

PAL–DS can be used on a case-by-case basis in lieu of a preferred model if it can be demonstrated, using the criteria in section 3.2, that PAL–DS is more appropriate for the specific application. In this case the model options/modes which are most appropriate for the application should be used.

b. Input Requirements

Source data: point-sources—emission rate, physical stack height, stack gas temperature, stack gas velocity, stack diameter, stack gas volume flow, coordinates of stack, initial σ_y and σ_z; area sources—source strength, size of area source, coordinates of S.W. corner, and height of area source; and line sources—source strength, number of lanes, height of source, coordinates of end points, initial σ_y and σ_z, width of line source, and width of median. Diurnal variations in emissions are permitted. When applicable, the settling velocity and deposition velocity are also permitted.

Meteorological data: wind profile exponents, anemometer height, wind direction and speed, stability class, mixing height, air temperature, and hourly variations in emission rate.

Receptor data: receptor coordinates.

c. Output

Printed output includes:

Hourly concentration and deposition flux for each source type at each receptor; and

Average concentration for up to 24 hours for each source type at each receptor.

d. Type of Model

PAL–DS is a Gaussian plume model.

e. Pollutant Types

PAL–DS may be used to model non-reactive pollutants.

f. Source-Receptor Relationships

Up to 99 sources of each of 6 source types: point, area, and 4 types of line sources.

Source and receptor coordinates are uniquely defined.

Unique stack height for each source.

Coordinates of receptor locations are user defined.

g. Plume Behavior

Briggs final plume rise equations are used.

Fumigation and downwash are not treated.

If plume height exceeds mixing height, concentrations are assumed equal to zero.

Surface concentrations are set to zero when the plume centerline exceeds mixing height.

h. Horizontal Winds

User-supplied hourly wind data are used.

Constant, uniform (steady-state) wind is assumed within each hour. Wind is assumed to increase with height.

i. Vertical Wind Speeds

Assumed equal to zero.

j. Horizontal Dispersion

Rural dispersion coefficients from Turner (1969) are used with no adjustments made for surface roughness.

Six stability classes are used.

Dispersion coefficients (Pasquill-Gifford) are assumed based on a 3cm roughness height.

k. Vertical Dispersion

Six stability classes are used.

Rural dispersion coefficients from Turner (1969) are used; no further adjustments are made for variation in surface roughness, transport or averaging time.

Multiple reflection is handled by summation of series until the vertical standard deviation equals 1.6 times mixing height. Uniform vertical mixing is assumed thereafter.

l. Chemical Transformation

Not treated.

m. Physical Removal

PAL–DS can treat deposition of both gaseous and suspended particulates in the plume since gravitational settling and dry deposition of the particles are explicitly accounted for.

n. Evaluation Studies

None Cited.

B.14 Reactive Plume Model (RPM–IV)

Reference

Environmental Protection Agency, 1993. Reactive Plume Model IV (RPM–IV) User's Guide. EPA Publication No. EPA–454/B–93–012. U.S. Environmental Protection Agency (ESRL), Research Triangle Park, NC. (NTIS No. PB 93–217412)

Availability

The above report and model computer code are available on the Support Center for Regulatory Air Models Bulletin Board System. The model code is also available on diskette (as PB 96–502026) from the National Technical Information Service (see section B.0).

Abstract

The Reactive Plume Model, RPM–IV, is a computerized model used for estimating short-term concentrations of primary and secondary reactive pollutants resulting from single or, in some special cases, multiple sources if they are aligned with the mean wind direction. The model is capable of simulating the complex interaction of plume dispersion and non-linear photochemistry. If Carbon Mechanism IV (CBM–IV) is used, emissions must be disaggregated into carbon bond classes prior to model application. The model can be run on a mainframe computer, workstation, or IBM-compatible PC with at least 2 megabytes of memory. A major feature of RPM–IV is its ability to interface with input and output files from EPA's Regional Oxidant Model (ROM) and Urban Airshed Model (UAM) to provide an internally consistent set of modeled ambient concentrations for various pollutant species.

a. Recommendations for Regulatory Use

There is no specific recommendation at the present time. RPM–IV may be used on a case-by-case basis.

b. Input Requirements

Source data requirements are: emission rates, name, and molecular weight of each species of pollutant emitted; ambient pressure, ambient temperature, stack height, stack diameter, stack exit velocity, stack gas temperature, and location.

Meteorological data requirements are: wind speeds, plume widths or stability classes, photolytic rate constants, and plume depths or stability classes.

Receptor data requirements are: downwind distances or travel times at which calculations are to be made.

Initial concentration of all species is required, and the specification of downwind ambient concentrations to be entrained by the plume is optional.

c. Output

Short-term concentrations of primary and secondary pollutants at either user specified time increments, or user specified downwind distances.

d. Type of Model

Reactive Gaussian plume model.

e. Pollutant Types

Currently, using the Carbon Bond Mechanism (CBM–IV), 34 species are simulated (82 reactions), including NO, NO_2, O_3, SO_2, SO_4, five categories of reactive hydrocarbons, secondary nitrogen compounds, organic aerosols, and radical species.

f. Source-Receptor Relationships

Single point source.

Single area or volume source.

Multiple sources can be simulated if they are lined up along the wind trajectory.

Predicted concentrations are obtained at a user specified time increment, or at user specified downwind distances.

g. Plume Behavior

Briggs (1971) plume rise equations are used.

h. Horizontal Winds

User specifies wind speeds as a function of time.

i. Vertical Wind Speed

Not treated.

j. Horizontal Dispersion

User specified plume widths, or user may specify stability and widths will be computed using Turner (1969).

k. Vertical Dispersion

User specified plume depths, or user may specify stability in which case depths will be calculated using Turner (1969). Note that vertical uniformity in plume concentration is assumed.

l. Chemical Transformation

RPM–IV has the flexibility of using any user input chemical kinetic mechanism. Currently it is run using the chemistry of the Carbon Bond Mechanism, CBM–IV (Gery et al., 1988). The CBM–IV mechanism, as incorporated in RPM–IV, utilizes an updated simulation of PAN chemistry that includes a peroxy-peroxy radical termination reaction, significant when the atmosphere is NO_X-limited (Gery et al., 1989). As stated above, the current CBM–IV mechanism accommodates 34 species and 82 reactions focusing primarily on hydrocarbon/nitrogen oxides and ozone photochemistry.

m. Physical Removal

Not treated.

n. Evaluation Studies

Stewart, D.A. and M–K Liu, 1981. Development and Application of a Reactive Plume Model. Atmospheric Environment, 15: 2377–2393.

B.15 Shoreline Dispersion Model (SDM)

Reference

PEI Associates, 1988. User's Guide to SDM–A Shoreline Dispersion Model. EPA Publication No. EPA–450/4–88–017. U.S. Environmental Protection Agency, Research Triangle Park, NC. (NTIS No. PB 89–164305)

Availability

The model code is available on the Support Center for Regulatory Air Models Bulletin Board System (see section B.0).

Abstract

SDM is a hybrid multi-point Gaussian dispersion model that calculates source impact for those hours during the year when fumigation events are expected using a special fumigation algorithm and the MPTER regulatory model for the remaining hours (see appendix A).

a. Recommendations for Regulatory Use

SDM may be used on a case-by-case basis for the following applications:

- Tall stationary point sources located at a shoreline of any large body of water;
- Rural or urban areas;
- Flat terrain;
- Transport distances less than 50 km;
- 1-hour to 1-year averaging times.

b. Input Requirements

Source data: location, emission rate, physical stack height, stack gas exit velocity, stack inside diameter, stack gas temperature and shoreline coordinates.

Meteorological data: hourly values of mean wind speed within the Thermal Internal Boundary Layer (TIBL) and at stack height; mean potential temperature over land and over water; over water lapse rate; and surface sensible heat flux. In addition to these meteorological data, SDM access standard NWS surface and upper air meteorological data through the RAMMET preprocessor.

Receptor data: coordinates for each receptor.

c. Output

Printed output includes the MPTER model output as well as: special shoreline fumigation applicability report for each day and source; high-five tables on the standard output with ''F'' designation next to the concentration if that averaging period includes a fumigation event.

d. Type of Model

SDM is hybrid Gaussian model.

e. Pollutant Types

SDM may be used to model primary pollutants. Settling and deposition are not treated.

f. Source-Receptor Relationships

SDM applies user-specified locations of stationary point sources and receptors. User input stack height, shoreline orientation and source characteristics for each source. No topographic elevation is input; flat terrain is assumed.

g. Plume Behavior

SDM uses Briggs (1975) plume rise for final rise. SDM does not treat stack tip or building downwash.

h. Horizontal Winds

Constant, uniform (steady-state) wind is assumed for an hour. Straight line plume transport is assumed to all downwind distances. Separate wind speed profile exponents (EPA, 1980) for both rural and urban cases are assumed.

i. Vertical Wind Speed

Vertical wind speed is assumed equal to zero.

j. Horizontal Dispersion

For the fumigation algorithm coefficients based on Misra (1980) and Misra and McMillan (1980) are used for plume transport in stable air above TIBL and based on Lamb (1978) for transport in the unstable air below the TIBL. An effective horizontal dispersion coefficient based on Misra and Onlock (1982) is used. For nonfumigation periods, algorithms contained in the MPTER model are used (see appendix A).

k. Vertical Dispersion

For the fumigation algorithm, coefficients based on Misra (1980) and Misra and McMillan (1980) are used.

l. Chemical Transformation

Chemical transformation is not included in the fumigation algorithm.

m. Physical Removal

Physical removal is not explicitly treated.

n. Evaluation Studies

Environmental Protection Agency, 1987. Analysis and Evaluation of Statistical Coastal Fumigation Models. EPA Publication No. EPA–450/4–87–002. U.S. Environmental Protection Agency, Research Triangle Park, NC. (NTIS PB 87–175519)

B.16 SHORTZ

Reference

Bjorklund, J.R. and J.F. Bowers, 1982. User's Instructions for the SHORTZ and LONGZ Computer Programs, Volumes I and II. EPA Publication No. EPA–903/9–82–004a and b. U.S. Environmental Protection Agency, Region III, Philadelphia, PA.

Availability

The computer code is available on the Support Center for Regulatory Air Models Bulletin Board System and on diskette (as PB 96–501986) from the National Technical Information Service (see section B.0).

Abstract

SHORTZ utilizes the steady state bivariate Gaussian plume formulation for both urban and rural areas in flat or complex terrain to calculate ground-level ambient air concentrations. The model can calculate 1-hour, 2-hour, 3-hour etc. average concentrations due to emissions from stacks, buildings and area sources for up to 300 arbitrarily placed sources. The output consists of total concentration at each receptor due to emissions from each user-specified source or group of sources, including all sources. If the option for gravitational settling is invoked, analysis cannot be accomplished in complex terrain without violating mass continuity.

a. Recommendations for Regulatory Use

SHORTZ can be used if it can be demonstrated to estimate concentrations equivalent to those provided by the preferred model for a given application. SHORTZ must be executed in the equivalent mode.

SHORTZ can be used on a case-by-case basis in lieu of a preferred model if it can be demonstrated, using the criteria in section 3.2, that SHORTZ is more appropriate for the specific application. In this case the model options/modes which are most appropriate for the application should be used.

b. Input Requirements

Source data requirements are: for point, building or area sources, location, elevation, total emission rate (optionally classified by gravitational settling velocity) and decay coefficient; for stack sources, stack height, effluent temperature, effluent exit velocity, stack radius (inner), actual volumetric flow rate, and ground elevation (optional); for building sources, height, length and width, and orientation; for area sources, characteristic vertical dimension, and length, width and orientation.

Meteorological data requirements are: wind speed and measurement height, wind profile exponents, wind direction, standard deviations of vertical and horizontal wind directions, (i.e., vertical and lateral turbulent

intensities), mixing height, air temperature, and vertical potential temperature gradient.

Receptor data requirements are: coordinates, ground elevation.

c. Output

Printed output includes total concentration due to emissions from user-specified source groups, including the combined emissions from all sources (with optional allowance for depletion by deposition).

d. Type of Model

SHORTZ is a Gaussian plume model.

e. Pollutant Types

SHORTZ may be used to model primary pollutants. Settling and deposition of particulates are treated.

f. Source-Receptor Relationships

User specified locations for sources and receptors are used.

Receptors are assumed to be at ground level.

g. Plume Behavior

Plume rise equations of Bjorklund and Bowers (1982) are used.

Stack tip downwash (Bjorklund and Bowers, 1982) is included.

All plumes move horizontally and will fully intercept elevated terrain.

Plumes above mixing height are ignored.

Perfect reflection at mixing height is assumed for plumes below the mixing height.

Plume rise is limited when the mean wind at stack height approaches or exceeds stack exit velocity.

Perfect reflection at ground is assumed for pollutants with no settling velocity.

Zero reflection at ground is assumed for pollutants with finite settling velocity.

Tilted plume is used for pollutants with settling velocity specified. Buoyancy-induced dispersion (Briggs, 1972) is included.

h. Horizontal Winds

Winds are assumed homogeneous and steady-state.

Wind speed profile exponents are functions of both stability class and wind speed. Default values are specified in Bjorklund and Bowers (1982).

i. Vertical Wind Speed

Vertical winds are assumed equal to zero.

j. Horizontal Dispersion

Horizontal plume size is derived from input lateral turbulent intensities using adjustments to plume height, and rate of plume growth with downwind distance specified in Bjorklund and Bowers (1982).

k. Vertical Dispersion

Vertical plume size is derived from input vertical turbulent intensities using adjustments to plume height and rate of plume growth with downwind distance specified in Bjorklund and Bowers (1982).

l. Chemical Transformation

Chemical transformations are treated using exponential decay. Time constant is input by the user.

m. Physical Removal

Settling and deposition of particulates are treated.

n. Evaluation Studies

Bjorklund, J.R. and J.F. Bowers, 1982. User's Instructions for the SHORTZ and LONGZ Computer Programs. EPA Publication No. EPA–903/9–82–004. EPA Environmental Protection Agency, Region III, Philadelphia, PA.

Wackter, D. and R. Londergan, 1984. Evaluation of Complex Terrain Air Quality Simulation Models. EPA Publication No. EPA–450/4–84–017. U.S. Environmental Protection Agency, Research Triangle Park, NC.

B.17 Simple Line-Source Model

Reference

Chock, D.P., 1980. User's Guide for the Simple Line-Source Model for Vehicle Exhaust Dispersion Near a Road. Ford Research Laboratory, Dearborn, MI.

Availability

Copies of the above reference are available without charge from: Dr. D.P. Chock, Ford Research Laboratory, P.O. Box 2053; MD–3083, Dearborn, MI 48121–2053. The short model algorithm is contained in the User's Guide.

Abstract

The Simple Line-Source Model is a simple steady-state Gaussian plume model which can be used to determine hourly (or half-hourly) averages of exhaust concentrations within 100m from a roadway on a relatively flat terrain. The model allows for plume rise due to the heated exhaust, which can be important when the crossroad wind is very low. The model also utilizes a new set of vertical dispersion parameters which reflects the influence of traffic-induced turbulence.

a. Recommendations for Regulatory Use

The Simple Line-Source Model can be used if it can be demonstrated to estimate concentrations equivalent to those provided by the preferred model for a given application. The model must be executed in the equivalent mode.

The Simple Line-Source Model can be used on a case-by-case basis in lieu of a preferred model if it can be demonstrated, using criteria in section 3.2, that it is more appropriate for the specific application. In this case the model options/modes which are most appropriate for the application should be used.

b. Input Requirements

Source data requirements are: emission rate per unit length per lane, the number of lanes on each road, distances from lane centers to the receptor, source and receptor heights.

Meteorological data requirements are: buoyancy flux, ambient stability condition, ambient wind and its direction relative to the road.

Receptor data requirements are: distance and height above ground.

c. Output

Printed output includes hourly or (half-hourly) concentrations at the receptor due to exhaust emission from a road (or a system of roads by summing the results from repeated model applications).

d. Type of Model

The Simple Line-Source Model is a Gaussian plume model.

e. Pollutant Types

The Simple Line-Source Model can be used to model primary pollutants. Settling and deposition are not treated.

f. Source-Receptor Relationship

The Simple Line-Source Model treats arbitrary location of line sources and receptors.

g. Plume Behavior

Plume-rise formula adequate for a heated line source is used.

h. Horizontal Winds

The Simple Line-Source Model uses user-supplied hourly (or half-hourly) ambient wind speed and direction. The wind measurements are from a height of 5 to 10m.

i. Vertical Wind Speed

Vertical wind speed is assumed equal to zero.

j. Dispersion Parameters

Horizontal dispersion parameter is not used.

k. Vertical Dispersion

A vertical dispersion parameter is used which is a function of stability and wind-road angle. Three stability classes are used: unstable, neutral and stable. The parameters take into account the effect of traffic-generated turbulence (Chock, 1980).

l. Chemical Transformation

Not treated.

m. Physical Removal

Not treated.

n. Evaluation Studies

Chock, D.P., 1978. A Simple Line-Source Model for Dispersion Near Roadways. Atmospheric Environment, 12: 823–829.

Sistla, G., P. Samson, M. Keenan and S.T. Rao, 1979. A Study of Pollutant Dispersion Near Highways. Atmospheric Environment, 13: 669–685.

B.18 SLAB

Reference:

Ermak, D.L., 1990. User's Manual for SLAB: An Atmospheric Dispersion Model for Denser-than-Air Releases (UCRL–MA–105607), Lawrence Livermore National Laboratory.

Availability

The computer code can be obtained from: Energy Science and Technology Center, P.O. Box 1020, Oak Ridge, TN 37830, Phone (615) 576–2606.

The User's Manual (as DE 91–008443) can be obtained from the National Technical Information Service. The computer code is also available on the Support Center for Regulatory Air Models Bulletin Board System (Public Upload/ Download Area; see section B.0.)

Abstract

The SLAB model is a computer model, PC-based, that simulates the atmospheric dispersion of denser-than-air releases. The types of releases treated by the model include a ground-level evaporating pool, an elevated horizontal jet, a stack or elevated vertical jet and an instantaneous volume source. All sources except the evaporating pool may be characterized as aerosols. Only one type of release can be processed in any individual simulation. Also, the model simulates only one set of meteorological conditions; therefore direct application of the model over time periods longer than one or two hours is not recommended.

a. Recommendations for use

The SLAB model should be used as a refined model to estimate spatial and temporal distribution of short-term ambient concentration (e.g., 1-hour or less averaging times) and the expected area of exposure to

concentrations above specified threshold values for toxic chemical releases where the release is suspected to be denser than the ambient air.

b. Input Requirements

The SLAB model is executed in the batch mode. Data are input directly from an external input file. There are 29 input parameters required to run each simulation. These parameters are divided into 5 categories by the user's guide: source type, source properties, spill properties, field properties, and meteorological parameters. The model is not designed to accept real-time meteorological data or convert units of input values. Chemical property data are not available within the model and must be input by the user. Some chemical and physical property data are available in the user's guide.

Source type is chosen as one of the following: evaporating pool release, horizontal jet release, vertical jet or stack release, or instantaneous or short duration evaporating pool release.

Source property data requirements are physical and chemical properties (molecular weight, vapor heat capacity at constant pressure; boiling point; latent heat of vaporization; liquid heat capacity; liquid density; saturation pressure constants), and initial liquid mass fraction in the release.

Spill properties include: source temperature, emission rate, source dimensions, instantaneous source mass, release duration, and elevation above ground level.

Required field properties are: desired concentration averaging time, maximum downwind distance (to stop the calculation), and four separate heights at which the concentration calculations are to be made.

Meteorological parameter requirements are: ambient measurement height, ambient wind speed at designated ambient measurement height, ambient temperature, surface roughness, relative humidity, atmospheric stability class, and inverse Monin-Obukhov length (optional, only used as an input parameter when stability class is unknown).

c. Output

No graphical output is generated by the current version of this program. The output print file is automatically saved and must be sent to the appropriate printer by the user after program execution. Printed output includes in tabular form:

Listing of model input data;

Instantaneous spatially-averaged cloud parameters—time, downwind distance, magnitude of peak concentration, cloud dimensions (including length for puff-type simulations), volume (or mole) and mass fractions, downwind velocity, vapor mass fraction, density, temperature, cloud velocity, vapor fraction, water content, gravity flow velocities, and entrainment velocities;

Time-averaged cloud parameters—parameters which may be used externally to calculate time-averaged concentrations at any location within the simulation domain (tabulated as functions of downwind distance);

Time-averaged concentration values at plume centerline and at five off-centerline distances (off-centerline distances are multiples of the effective cloud half-width, which varies as a function of downwind distance) at four user-specified heights and at the height of the plume centerline.

d. Type of Model

As described by Ermak (1989), transport and dispersion are calculated by solving the conservation equations for mass, species, energy, and momentum, with the cloud being modeled as either a steady-state plume, a transient puff, or a combination of both, depending on the duration of the release. In the steady-state plume mode, the crosswind-averaged conservation equations are solved and all variables depend only on the downwind distance. In the transient puff mode, the volume-averaged conservation equations are solved, and all variables depend only on the downwind travel time of the puff center of mass. Time is related to downwind distance by the height-averaged ambient wind speed. The basic conservation equations are solved via a numerical integration scheme in space and time.

e. Pollutant Types

Pollutants are assumed to be non-reactive and non-depositing dense gases or liquid-vapor mixtures (aerosols). Surface heat transfer and water vapor flux are also included in the model.

f. Source-Receptor Relationships

Only one source can be modeled at a time.

There is no limitation to the number of receptors; the downwind receptor distances are internally-calculated by the model. The SLAB calculation is carried out up to the user-specified maximum downwind distance.

The model contains submodels for the source characterization of evaporating pools, elevated vertical or horizontal jets, and instantaneous volume sources.

g. Plume Behavior

Plume trajectory and dispersion is based on crosswind-averaged mass, species, energy, and momentum balance equations. Surrounding terrain is assumed to be flat and of uniform surface roughness. No obstacle or building effects are taken into account.

h. Horizontal Winds

A power law approximation of the logarithmic velocity profile which accounts for stability and surface roughness is used.

i. Vertical Wind Speed

Not treated.

j. Vertical Dispersion

The crosswind dispersion parameters are calculated from formulas reported by Morgan et al. (1983), which are based on experimental data from several sources. The formulas account for entrainment due to atmospheric turbulence, surface friction, thermal convection due to ground heating, differential motion between the air and the cloud, and damping due to stable density stratification within the cloud.

k. Horizontal Dispersion

The horizontal dispersion parameters are calculated from formulas similar to those described for vertical dispersion, also from the work of Morgan et al. (1983).

l. Chemical Transformation

The thermodynamics of the mixing of the dense gas or aerosol with ambient air (including water vapor) are treated. The relationship between the vapor and liquid fractions within the cloud is treated using the local thermodynamic equilibrium approximation. Reactions of released chemicals with water or ambient air are not treated.

m. Physical Removal

Not treated.

n. Evaluation Studies

Blewitt, D.N., J.F. Yohn and D.L. Ermak, 1987. An Evaluation of SLAB and DEGADIS Heavy Gas Dispersion Models Using the HF Spill Test Data. Proceedings, AIChE International Conference on Vapor Cloud Modeling, Boston, MA, November, pp. 56–80.

Ermak, D.L., S.T. Chan, D.L. Morgan and L.K. Morris, 1982. A Comparison of Dense Gas Dispersion Model Simulations with Burro Series LNG Spill Test Results. J. Haz. Matls., 6: 129–160.

Zapert, J.G., R.J. Londergan and H. Thistle, 1991. Evaluation of Dense Gas Simulation Models. EPA Publication No. EPA–450/4–90–018. U.S. Environmental Protection Agency, Research Triangle Park, NC.

B.19 WYNDvalley Model

Reference

Harrison, Halstead, 1992. ''A User's Guide to WYNDvalley 3.11, an Eulerian-Grid Air-Quality Dispersion Model with Versatile Boundaries, Sources, and Winds,'' WYNDsoft Inc., Mercer Island, WA.

Availability

Copies of the user's guide and the executable model computer codes are available at a cost of $295.00 from: WYNDsoft, Incorporated, 6333 77th Avenue, Mercer Island, WA 98040, Phone: (206) 232–1819.

Abstract

WYNDvalley 3.11 is a multi-layer (up to five vertical layers) Eulerian grid dispersion model that permits users flexibility in defining borders around the areas to be modeled, the boundary conditions at these borders, the intensities and locations of emissions sources, and the winds and diffusivities that affect the dispersion of atmospheric pollutants. The model's output includes gridded contour plots of pollutant concentrations for the highest brief episodes (during any single time step), the highest and second-highest 24-hour averages, averaged dry and wet deposition fluxes, and a colored ''movie'' showing evolving dispersal of pollutant concentrations, together with temporal plots of the concentrations at specified receptor sites and statistical inference of the probabilities that standards will be exceeded at those sites. WYNDvalley is implemented on IBM compatible microcomputers, with interactive data input and color graphics display.

a. Recommendations for Regulatory Use

WYNDvalley may be used on a case-by-case basis to estimate concentrations during valley stagnation periods of 24 hours or longer. Recommended inputs are listed below.

Variable	Recommended value
Horizontal cell dimension	250 to 500 meters.
Vertical layers	3 to 5.
Layer depth	50 to 100 meters.
Background (internal to model).	Zero (background should be added externally to model estimates).
Lateral meander velocity	Default.
Diffusivities	Default.
Ventilation parameter (upper boundary condition).	Default.
Dry deposition velocity	Zero (site-specific).
Washout ratio	Zero (site-specific).

b. Input Requirements

Input data, including model options, modeling domain boundaries, boundary conditions, receptor locations, source locations, and emission rates, may be entered interactively, or through existing template files from a previous run. Meteorological data, including wind speeds, wind directions, rain rates (optionally, for wet deposition calculations), and time of day and year, may be of arbitrary time increment (usually an hour) and are entered into the model through an external meteorological data file. Optionally, users may specify diffusivities and

upper boundary conditions for each time increment. Source emission rates may be constant or modulated on a daily, weekly, and/or seasonal basis.

c. Output

Output from WYNDvalley includes gridded contour maps of the highest pollutant concentrations at each time step and the highest and second-highest 24-hour average concentrations. Output also includes the deposition patterns for wet, dry, and total fluxes of the pollutants to the surface, integrated over the simulation period. A running ''movie'' of the concentration patterns is displayed on the screen (with optional printout) as they evolve during the simulation. Output files include tables of daily-averaged pollutant concentrations at every modeled grid cell, and of hourly concentrations at up to eight specified receptors. Statistical analyses are performed on the hourly and daily data to estimate the probabilities that specified levels will be exceeded more than once during an arbitrary number of days with similar weather.

d. Type of Model

WYNDvalley is a three dimensional Eulerian grid model.

e. Pollutant Types

WYNDvalley may be used to model any inert pollutant.

f. Source-Receptor Relationships

Source and receptors may be located anywhere within the user-defined modeling domain. All point and area sources, or portions of an area source, within a given grid cell are summed to define a representative emission rate for that cell. Concentrations are calculated for each and every grid cell in the modeling domain. Up to eight grid cells may be selected as receptors, for which time histories of concentration and deposition fluxes are determined, and probabilities of exceedance are calculated.

g. Plume Behavior

Emissions for buoyant point sources are placed by the user in a grid cell which best reflects the expected effective plume height during stagnation conditions. Five vertical layers are available to the user.

h. Horizontal Winds

During each time step in the model, the winds are assumed to be uniform throughout the modeling domain. Numerical diffusion is minimized in the advection algorithm. To account for terrain effects on winds and dispersion, an ad hoc algorithm is employed in the model to distribute concentrations near boundaries.

i. Vertical Wind Speed

Winds are assumed to be constant with height.

j. Horizontal Dispersion

Horizontal eddy diffusion coefficients may be entered explicitly by the user at every time step. Alternatively, a default algorithm may be invoked to estimate these coefficients from the wind velocities and their variances.

k. Vertical Dispersion

Vertical eddy diffusion coefficients and a top-of-model boundary condition may be entered explicitly by the user at every time step. Alternatively, a default algorithm may be invoked to estimate these coefficients from the horizontal wind velocities and their variances, and from an empirical time-of-day correction derived from temperature gradient measurements and Monin-Obukhov similarities.

l. Chemical Transformation

Chemical transformation is not explicitly treated by WYNDvalley.

m. Physical Removal

WYNDvalley optionally simulates both wet and dry deposition. Dry deposition is proportional to concentration in the lowest layer, while wet deposition is proportional to rain rate and concentration in each layer. Appropriate coefficients (deposition velocities and washout ratios) are input by the user.

n. Evaluation Studies

Harrison, H., G. Pade, C. Bowman and R. Wilson, 1990. Air Quality During Stagnations: A Comparison of RAM and WYNDvalley with PM–10 Measurements at Five Sites. Journal of the Air & Waste Management Association, 40: 47–52.

Maykut, N. et al., 1990. Evaluation of the Atmospheric Deposition of Toxic Contaminants to Puget Sound. State of Washington, Puget Sound Water Quality Authority, Seattle, WA.

Yoshida, C., 1990. A Comparison of WYNDvalley Versions 2.12 and 3.0 with PM–10 Measurements in Six Cities in the Pacific Northwest. Lane Regional Air Pollution Authority, Springfield, OR.

B. REF References

Beals, G.A., 1971. A Guide to Local Dispersion of Air Pollutants. Air Weather Service Technical Report ⊥214 (April 1971).

Bjorklund, J.R. and J.F. Bowers, 1982. User's Instructions for the SHORTZ and LONGZ Computer Programs. EPA Publication No. EPA–903/9–82–004a and b. U.S. Environmental Protection Agency, Region III, Philadelphia, PA.

Briggs, G.A., 1969. Plume Rise. U.S. Atomic Energy Commission Critical Review Series, Oak Ridge National Laboratory, Oak Ridge, TN. (NTIS No. TID–25075)

Briggs, G.A., 1971. Some Recent Analyses of Plume Rise Observations. Proceedings of the Second International Clean Air Congress, edited by H.M. Englund and W.T. Berry. Academic Press, New York, NY.

Briggs, G.A., 1972. Discussion on Chimney Plumes in Neutral and Stable Surroundings. Atmospheric Environment, 6: 507–510.

Briggs, G.A., 1974. Diffusion Estimation for Small Emissions. USAEC Report ATDL–106. U.S. Atomic Energy Commission, Oak Ridge, TN.

Briggs, G.A., 1975. Plume Rise Predictions. Lectures on Air Pollution and Environmental Impact Analyses. American Meteorological Society, Boston, MA, pp. 59–111.

Briggs, G.A., 1984. Plume Rise and Buoyancy Effects. Atmospheric Science and Power Production, Darryl Randerson (Ed.). DOE Report DOE/TIC–27601, Technical Information Center, Oak Ridge, TN. (NTIS No. DE84005177)

Carpenter, S.B., T.L. Montgomery, J.M. Leavitt, W.C. Colbaugh and F.W. Thomas, 1971. Principal Plume Dispersion Models: TVA Power Plants. Journal of Air Pollution Control Association, 21: 491–495.

Chock, D.P., 1980. User's Guide for the Simple Line-Source Model for Vehicle Exhaust Dispersion Near a Road. Environmental Science Department, General Motors Research Laboratories, Warren, MI.

Colenbrander, G.W., 1980. A Mathematical Model for the Transient Behavior of Dense Vapor Clouds, 3rd International Symposium on Loss Prevention and Safety Promotion in the Process Industries, Basel, Switzerland.

DeMarrais, G.A., 1959. Wind Speed Profiles at Brookhaven National Laboratory. Journal of Applied Meteorology, 16: 181–189.

Ermak, D.L., 1989. A Description of the SLAB Model, presented at JANNAF Safety and Environmental Protection Subcommittee Meeting, San Antonio, TX, April, 1989.

Gery, M.W., G.Z. Whitten and J.P. Killus, 1988. Development and Testing of CBM-IV for Urban and Regional Modeling. EPA Publication No. EPA–600/3–88–012. U.S. Environmental Protection Agency, Research Triangle Park, NC. (NTIS No. PB 88–180039)

Gery, M.W., G.Z. Whitten, J.P. Killus and M.C. Dodge, 1989. A Photochemical Kinetics Mechanism for Urban and Regional Scale Computer Modeling. Journal of Geophysical Research, 94: 12,925–12,956.

Gifford, F.A. and S.R. Hanna, 1970. Urban Air Pollution Modeling. Proceedings of the Second International Clean Air Congress, Academic Press, Washington, D.C.; pp. 140–1151.

Gifford, F.A., 1975. Atmospheric Dispersion Models for Environmental Pollution Applications. Lectures on Air Pollution and Environmental Impact Analyses. American Meteorological Society, Boston, MA.

Green, A.E., Singhal R.P. and R. Venkateswar, 1980. Analytical Extensions of the Gaussian Plume Model. Journal of the Air Pollution Control Association, 30: 773–776.

Heffter, J.L., 1965. The Variations of Horizontal Diffusion Parameters with Time for Travel Periods of One Hour or Longer. Journal of Applied Meteorology, 4: 153–156.

Heffter, J.L., 1980. Air Resources Laboratories Atmospheric Transport and Dispersion Model (ARL-ATAD). NOAA Technical Memorandum ERL ARL–81. Air Resources Laboratories, Silver Spring, MD.

Irwin, J.S., 1979a. Estimating Plume Dispersion—A Recommended Generalized Scheme. Fourth Symposium on Turbulence, Diffusion and Air Pollution, Reno, Nevada.

Irwin, J.S., 1979b. A Theoretical Variation of the Wind Profile Power-Law Exponent as a Function of Surface Roughness and Stability. Atmospheric Environment, 13: 191–194.

MacCready, P.B., Baboolal, L.B. and P.B. Lissaman, 1974. Diffusion and Turbulence Aloft Over Complex Terrain. Preprint Volume, AMS Symposium on Atmospheric Diffusion and Air Pollution, Santa Barbara, CA. American Meteorological Society, Boston, MA.

Moore, G.E., T.E. Stoeckenius and D.A. Stewart, 1982. A Survey of Statistical Measures of Model Performance and Accuracy for Several Air Quality Models. EPA Publication No. EPA–450/4–83–001. U.S. Environmental Protection Agency, Research Triangle Park, NC.

Morgan, D.L., Jr., L.K. Morris and D.L. Ermak, 1983. SLAB: A Time-Dependent Computer Model for the Dispersion of Heavy Gas Released in the Atmosphere, UCRL–53383, Lawrence Livermore National Laboratory, Livermore, CA.

Pasquill, F., 1976. Atmospheric Dispersion Parameters in Gaussian Plume Modeling, Part II. EPA Publication No. EPA–600/4–76–030b. U.S. Environmental Protection Agency, Research Triangle Park, NC.

Slade, D.H., 1968. *Meteorology and Atomic Energy*, U.S. Atomic Energy Commission, 445 pp. (NTIS No. TID–24190)

Turner, D.B., 1964. A Diffusion Model of An Urban Area. Journal of Applied Meteorology, 3: 83–91.

Turner, D.B., 1969. Workbook of Atmospheric Dispersion Estimates. PHS Publication No. 999–AP–26. U.S. Environmental Protection Agency, Research Triangle Park, NC.

Van Dop, H., 1992. Buoyant Plume Rise in a Lagrangian Frame Work. Atmospheric Environment, 26A: 1335–1346.

APPENDIX C TO APPENDIX W OF PART 51—EXAMPLE AIR QUALITY ANALYSIS CHECKLIST

C.0 Introduction

This checklist recommends a standardized set of data and a standard basic level of analysis needed for PSD applications and SIP revisions. The checklist implies a level of detail required to assess both PSD increments and the NAAQS. Individual cases may require more or less information and the Regional Meteorologist should be consulted at an early stage in the development of a data base for a modeling analysis.

At pre-application meetings between source owner and reviewing authority, this checklist should prove useful in developing a consensus on the data base, modeling techniques and overall technical approach prior to the actual analyses. Such agreement will help avoid misunderstandings concerning the final results and may reduce the later need for additional analyses.

EXAMPLE AIR QUALITY ANALYSIS CHECKLIST[1]

1. Source location map(s) showing location with respect to:
- Urban areas[2]
- PSD Class I areas
- Nonattainment areas[2]
- Topographic features (terrain, lakes, river valleys, etc.)[2]
- Other major existing sources[2]
- Other major sources subject to PSD requirements
- NWS meteorological observations (surface and upper air)
- On-site/local meteorological observations (surface and upper air)
- State/local/on-site air quality monitoring locations[2]
- Plant layout on a topographic map covering a 1km radius of the source with information sufficient to determine GEP stack heights

2. Information on urban/rural characteristics:
- Land use within 3km of source classified according to Auer (1978): Correlation of land use and cover with meteorological anomalies. Journal of Applied Meteorology, 17: 636–643.
- Population

–> total

–> density
- Based on current guidance determination of whether the area should be addressed using urban or rural modeling methodology

3. Emission inventory and operating/design parameters for major sources within region of significant impact of proposed site (same as required for applicant)
- Actual and allowable annual emission rates (g/s) and operating rates[3]
- Maximum design load short-term emission rate (g/s)[3]
- Associated emissions/stack characteristics as a function of load for maximum, average, and nominal operating conditions if stack height is less than GEP or located in complex terrain. Screening analyses as footnoted above or detailed analyses, if necessary, must be employed to determine the constraining load condition (e.g., 50%, 75%, or 100% load) to be relied upon in the short-term modeling analysis.

—location (UTM's)

—height of stack (m) and grade level above MSL

—stack exit diameter (m)

—exit velocity (m/s)

—exit temperature (°K)
- Area source emissions (rates, size of area, height of area source)[3]
- Location and dimensions of buildings (plant layout drawing)

—to determine GEP stack height

—to determine potential building downwash considerations for stack heights less than GEP
- Associated parameters

—boiler size (megawatts, pounds/hr. steam, fuel consumption, etc.)

—boiler parameters (% excess air, boiler type, type of firing, etc.)

—operating conditions (pollutant content in fuel, hours of operation, capacity factor, % load for winter, summer, etc.)

—pollutant control equipment parameters (design efficiency, operation record, e.g., can it be bypassed?, etc.)
- Anticipated growth changes

4. Air quality monitoring data:
- Summary of existing observations for latest five years (including any additional quality assured measured data which can be obtained from any State or local agency or company)[4]
- Comparison with standards
- Discussion of background due to uninventoried sources and contributions from outside the inventoried area and description of the method used for determination of background (should be consistent with the Guideline)

---

[1] The "Screening Procedures for Estimating the Air Quality Impact of Stationary Sources, Revised", October 1992 (EPA–450/R–92–019), should be used as a screening tool to determine whether modeling analyses are required. Screening procedures should be refined by the user to be site/problem specific.

[2] Within 50km or distance to which source has a significant impact, whichever is less.

[3] Particulate emissions should be specified as a function of particulate diameter and density ranges.

[4] See footnote 2 of this appendix C.

5. Meteorological data:

• Five consecutive years of the most recent representative sequential hourly National Weather Service (NWS) data, or one or more years of hourly sequential on-site data

• Discussion of meteorological conditions observed (as applied or modified for the site-specific area, i.e., identify possible variations due to difference between the monitoring site and the specific site of the source)

• Discussion of topographic/land use influences

6. Air quality modeling analyses:

• Model each individual year for which data are available with a recommended model or model demonstrated to be acceptable on a case-by-case basis

—urban dispersion coefficients for urban areas

—rural dispersion coefficients for rural areas

• Evaluate downwash if stack height is less than GEP

• Define worst case meteorology

• Determine background and document method

—long-term

—short-term

• Provide topographic map(s) of receptor network with respect to location of all sources

• Follow current guidance on selection of receptor sites for refined analyses

• Include receptor terrain heights (if applicable) used in analyses

• Compare model estimates with measurements considering the upper ends of the frequency distribution

• Determine extent of significant impact; provide maps

• Define areas of maximum and highest, second-highest impacts due to applicant source (refer to format suggested in Air Quality Summary Tables)

–> long-term

–> short-term

7. Comparison with acceptable air quality levels:

• NAAQS

• PSD increments

• Emission offset impacts if nonattainment

8. Documentation and guidelines for modeling methodology:

• Follow guidance documents

–> appendix W to 40 CFR part 51

–> ''Screening Procedures for Estimating the Air Quality Impact of Stationary Sources, Revised'' (EPA–450/R–92–019), 1992

–> ''Guideline for Determination of Good Engineering Practice Stack Height (Technical Support Document for the Stack Height Regulations)'' (EPA–450/4–80–023R), 1985

–> ''Ambient Monitoring Guidelines for PSD'' (EPA–450/4–87–007), 1987

–> Applicable sections of 40 CFR parts 51 and 52.

AIR QUALITY SUMMARY—FOR NEW SOURCE ALONE

Pollutant: _____[1] _____[2] _____[2]

	Highest	Highest 2d high	Highest	Highest 2d high	Annual
Concentration Due to Modeled Source (μg/m³)					
Background Concentration (μg/m³)					
Total Concentration (μg/m³)					
Receptor Distance (km) (or UTM easting)					
Receptor Direction (°) (or UTM northing)					
Receptor Elevation (m)					
Wind Speed (m/s)					
Wind Direction (°)					
Mixing Depth (m)					
Temperature (°K)					
Stability					
Day/Month/Year of Occurrence					

Surface Air Data From _____ Surface Station Elevation (m) _____

Anemometer Height Above Local Ground Level (m) _____

Upper Air Data From _____

Period of Record Analyzed _____

Model Used _____

Recommended Model _____

[1] Use separate sheet for each pollutant (SO_2, PM–10, CO, NO_X, HC, Pb, Hg, Asbestos, etc.).

[2] List all appropriate averaging periods (1-hr, 3-hr, 8-hr, 24-hr, 30-day, 90-day, etc.) for which an air quality standard exists.

AIR QUALITY SUMMARY—FOR ALL NEW SOURCES

Pollutant: _____[1] _____[2] _____[2]

	Highest	Highest 2nd high	Highest	Highest 2nd high	Annual
Concentration Due to Modeled Source (μg/m³)					

AIR QUALITY SUMMARY—FOR ALL NEW SOURCES—Continued

Pollutant: _____[1] _____[2] _____[2]

	Highest	Highest 2nd high	Highest	Highest 2nd high	Annual
Background Concentration (μg/m³)					
Total Concentration (μg/m³)					
Receptor Distance (km) (or UTM easting)					
Receptor Direction (°) (or UTM northing)					
Receptor Elevation (m)					
Wind Speed (m/s)					
Wind Direction (°)					
Mixing Depth (m)					
Temperature (°K)					
Stability					
Day/Month/Year of Occurrence					

Surface Air Data From _____ Surface Station Elevation (m) _____
Anemometer Height Above Local Ground Level (m) _____
Upper Air Data From _____
Period of Record Analyzed _____
Model Used _____
Recommended Model _____

[1] Use separate sheet for each pollutant (SO_2, PM–10, CO, NO_X, HC, Pb, Hg, Asbestos, etc.).
[2] List all appropriate averaging periods (l-hr, 3-hr, 8-hr, 24-hr, 30-day, 90-day, etc.) for which an air quality standard exists.

AIR QUALITY SUMMARY—FOR ALL SOURCES

Pollutant: _____[1] _____[2] _____[2]

	Highest	Highest 2nd high	Highest	Highest 2nd high	Annual
Concentration Due to Modeled Source (μg/m³)					
Background Concentration (μg/m³)					
Total Concentration (μg/m³)					
Receptor Distance (km) (or UTM easting)					
Receptor Direction (°) (or UTM northing)					
Receptor Elevation (m)					
Wind Speed (m/s)					
Wind Direction (°)					
Mixing Depth (m)					
Temperature (°K)					
Stability					
Day/Month/Year of Occurrence					

Surface Air Data From _____ Surface Station Elevation (m) _____
Anemometer Height Above Local Ground Level (m) _____
Upper Air Data From _____
Period of Record Analyzed _____
Model Used _____
Recommended Model _____

[1] Use separate sheet for each pollutant (SO_2, PM–10, CO, NO_X, HC, Pb, Hg, Asbestos, etc.)
[2] List all appropriate averaging periods (1-hr, 3-hr, 8-hr, 24-hr, 30-day, 90-day, etc.) for which an air quality standard exists.

STACK PARAMETERS FOR ANNUAL MODELING

Stack No.	Serving	Emission rate for each pollutant (g/s)	Stack exit diameter (m)	Stack exit velocity (m/s)	Stack exit temperature (°K)	Physical height	Stack (m)	GEP stack ht. (m)	Stack base elevation (m)	Building dimensions (m)		
										Height	Width	Length

STACK PARAMETERS FOR SHORT-TERM MODELING [1]

Stack No.	Serving	Emission rate for each pollutant (g/s)	Stack exit diameter (m)	Stack exit velocity (m/s)	Stack exit temperature (°K)	Physical height	Stack (m)	GEP stack ht. (m)	Stack base elevation (m)	Building dimensions (m)		
										Height	Width	Length

[1] Separate tables for 50%, 75%, 100% of full operating condition (and any other operating conditions as determined by screening or detailed modeling analyses to represent constraining operating conditions) should be provided.

[61 FR 41840, Aug. 12, 1996]

APPENDIX X TO PART 51—EXAMPLES OF ECONOMIC INCENTIVE PROGRAMS

I. INTRODUCTION AND PURPOSE

This appendix contains examples of EIP's which are covered by the EIP rules. Program descriptions identify key provisions which distinguish the different model program types. The examples provide additional information and guidance on various types of regulatory programs collectively referred to as EIP's. The examples include programs involving stationary, area, and mobile sources. The definition section at 40 CFR 51.491 defines an EIP as a program which may include State established emission fees or a system of marketable permits, or a system of State fees on sale or manufacture of products the use of which contributes to O_3 formation, or any combination of the foregoing or other similar measures, as well as incentives and requirements to reduce vehicle emissions and vehicle miles traveled in the area, including any of the transportation control measures identified in section 108(f). Such programs span a wide spectrum of program designs.

The EIP's are comprised of several elements that, in combination with each other, must insure that the fundamental principles of any regulatory program (including accountability, enforceability and noninterference with other requirements of the Act) are met. There are many possible combinations of program elements that would be acceptable. Also, it is important to emphasize that the effectiveness of an EIP is dependent upon the particular area in which it is implemented. No two areas face the same air quality circumstances and, therefore, effective strategies and programs will differ among areas.

Because of these considerations, the EPA is not specifying one particular design or type of strategy as acceptable for any given EIP. Such specific guidance would potentially discourage States (or other entities with delegated authority to administer parts of an implementation plan) from utilizing other equally viable program designs that may be more appropriate for their situation. Thus, the examples given in this Appendix are general in nature so as to avoid limiting innovation on the part of the States in developing programs tailored to individual State needs.

Another important consideration in designing effective EIP's is the extent to which different strategies, or programs targeted at different types of sources, can complement one another when implemented together as an EIP ''package.'' The EPA encourages States to consider packaging different measures together when such a strategy is likely to increase the overall benefits from the program as a whole. Furthermore, some activities, such as information distribution or public awareness programs, while not EIP's in and of themselves, are often critical to the success of other measures and, therefore, would be appropriate complementary components of a program package. All SIP emissions reductions credits should reflect a consideration of the effectiveness of the entire package.

II. EXAMPLES OF STATIONARY AND MOBILE SOURCE ECONOMIC INCENTIVE STRATEGIES

There is a wide variety of programs that fall under the general heading of EIP's. Further, within each general type of program are several different basic program designs. This section describes common types of EIP's that have been implemented, designed, or discussed in the literature for stationary and mobile sources. The program types discussed below do not include all of the possible types of EIP's. Innovative approaches incorporating new ideas in existing programs, different combinations of existing program elements, or wholly new incentive systems provide additional opportunities for States to find ways to meet environmental goals at lower total cost.

A. Emissions Trading Markets

One prominent class of EIP's is based upon the creation of a market in which trading of source-specific emissions requirements may occur. Such programs may include traditional rate-based emissions limits (generally referred to as emissions averaging) or overall limits on a source's total mass emissions per unit of time (generally referred to as an

emissions cap). The emissions limits, which may be placed on individual emitting units or on facilities as a whole, may decline over time. The common feature of such programs is that sources have an ongoing incentive to reduce pollution and increased flexibility in meeting their regulatory requirements. A source may meet its own requirements either by directly preventing or controlling emissions or by trading or averaging with another source. Trading or averaging may occur within the same facility, within the same firm, or between different firms. Sources with lower cost abatement alternatives may provide the necessary emissions reductions to sources facing more expensive alternatives. These programs can lower the overall cost of meeting a given total level of abatement. All sources eligible to trade in an emissions market are faced with continuing incentives to find better ways of reducing emissions at the lowest possible cost, even if they are already meeting their own emissions requirements.

Stationary, area, and mobile sources could be allowed to participate in a common emissions trading market. Programs involving emissions trading markets are particularly effective at reducing overall costs when individual affected sources face significantly different emissions control costs. A wider range in control costs among affected sources creates greater opportunities for cost-reducing trades. Thus, for example, areas which face relatively high stationary source control costs relative to mobile source control costs benefit most by including both stationary and mobile sources in a single emissions trading market.

Programs involving emissions trading markets have generally been designated as either emission allowance or emission reduction credit (ERC) trading programs. The Federal Acid Rain Program is an example of an emission allowance trading program, while ''bubbles'' and ''generic bubbles'' created under the EPA's 1986 Emission Trading Policy Statement are examples of ERC trading. Allowance trading programs can establish emission allocations to be effective at the start of a program, at some specific time in the future, or at varying levels over time. An ERC trading program requires ERC's to be measured against a pre-established emission baseline. Allowance allocations or emission baselines can be established either directly by the EIP rules or by reference to traditional regulations (e.g., RACT requirements). In either type of program, sources can either meet their EIP requirements by maintaining their own emissions within the limits established by the program, or by buying surplus allowances or ERC's from other sources. In any case, the State will need to establish adequate enforceable procedures for certifying and tracking trades, and for monitoring and enforcing compliance with the EIP.

The definition of the commodity to be traded and the design of the administrative procedures the buyer and seller must follow to complete a trade are obvious elements that must be carefully selected to help ensure a successful trading market that achieves the desired environmental goal at the lowest cost. An emissions market is defined as efficient if it achieves the environmental goal at the lowest possible total cost. Any feature of a program that unnecessarily increases the total cost without helping achieve the environmental goals causes market inefficiency. Thus, the design of an emission trading program should be evaluated not only in terms of the likelihood that the program design will ensure that the environmental goals of the program will be met, but also in terms of the costs that the design imposes upon market transactions and the impact of those costs on market efficiency.

Transaction costs are the investment in time and resources to acquire information about the price and availability of allowances or ERC's, to negotiate a trade, and to assure the trade is properly recorded and legally enforceable. All trading markets impose some level of transaction costs. The level of transaction costs in an emissions trading market are affected by various aspects of the design of the market, such as the nature of the procedures for reviewing, approving, and recording trades, the timing of such procedures (i.e., before or after the trade is made), uncertainties in the value of the allowance or credit being traded, the legitimacy of the allowance or credit being offered for sale, and the long-term integrity of the market itself. Emissions trading programs in which every transaction is different, such as programs requiring significant consideration of the differences in the chemical properties or geographic location of the emissions, can result in higher transaction costs than programs with a standardized trading commodity and well-defined rules for acceptable trades. Transaction costs are also affected by the relative ease with which information can be obtained about the availability and price of allowances or credits.

While the market considerations discussed above are clearly important in designing an efficient market to minimize the transaction costs of such a program, other considerations, such as regulatory certainty, enforcement issues, and public acceptance, also clearly need to be factored into the design of any emissions trading program.

B. Fee Programs

A fee on each unit of emissions is a strategy that can provide a direct incentive for sources to reduce emissions. Ideally, fees should be set so as to result in emissions

being reduced to the socially optimal level considering the costs of control and the benefits of the emissions reductions. In order to motivate a change in emissions, the fees must be high enough that sources will actively seek to reduce emissions. It is important to note that not all emission fee programs are designed to motivate sources to lower emissions. Fee programs using small fees are designed primarily to generate revenue, often to cover some of the administrative costs of a regulatory program.

There can be significant variations in emission fee programs. For example, potential emissions could be targeted by placing a fee on an input (e.g., a fee on the quantity and BTU content of fuel used in an industrial boiler) rather than on actual emissions. Sources paying a fee on potential emissions could be eligible for a fee waiver or rebate by demonstrating that potential emissions are not actually emitted, such as through a carbon absorber system on a coating operation.

Some fee program variations are designed to mitigate the potentially large amount of revenue that a fee program could generate. Although more complex than a simple fee program, programs that reduce or eliminate the total revenues may be more readily adopted in a SIP than a simple emission fee. Some programs lower the amount of total revenues generated by waiving the fee on some emissions. These programs reduce the total amount of revenue generated, while providing an incentive to decrease emissions. Alternatively, a program may impose higher per-unit fees on a portion of the emissions stream, providing a more powerful but targeted incentive at the same revenue levels. For example, fees could be collected on all emissions in excess of some fixed level. The level could be set as a percentage of a baseline (e.g., fees on emissions above some percentage of historical emissions), or as the lowest emissions possible (e.g., fees on emissions in excess of the lowest demonstrated emissions from the source category).

Other fee programs are ''revenue neutral,'' meaning that the pollution control agency does not receive any net revenues. One way to design a revenue-neutral program is to have both a fee provision and a rebate provision. Rebates must be carefully designed to avoid lessening the incentive provided by the emission fee. For example, a rebate based on comparing a source's actual emissions and the average emissions for the source category can be designed to be revenue neutral and not diminish the incentive.

Other types of fee programs collect a fee in relation to particular activities or types of products to encourage the use of alternatives. While these fees are not necessarily directly linked to the total amount of emissions from the activity or product, the relative simplicity of a usage fee may make such programs an effective way to lower emissions. An area source example is a construction permit fee for wood stoves. Such a permit fee is directly related to the potential to emit inherent in a wood stove, and not to the actual emissions from each wood stove in use. Fees on raw materials to a manufacturing process can encourage product reformulation (e.g., fees on solvent sold to makers of architectural coatings) or changes in work practices (e.g., fees on specialty solvents and degreasing compounds used in manufacturing).

Road pricing mechanisms are fee programs that are available to curtail low occupancy vehicle use, fund transportation system improvements and control measures, spatially and temporally shift driving patterns, and attempt to effect land usage changes. Primary examples include increased peak period roadway, bridge, or tunnel tolls (this could also be accomplished with automated vehicle identification systems as well), and toll discounts for pooling arrangements and zero-emitting/low-emitting vehicles.

C. Tax Code and Zoning Provisions

Modifications to existing State or local tax codes, zoning provisions, and land use planning can provide effective economic incentives. Possible modifications to encourage emissions reductions cover a broad span of programs, such as accelerated depreciation of capital equipment used for emissions reductions, corporate income tax deductions or credits for emission abatement costs, property tax waivers based on decreasing emissions, exempting low-emitting products from sales tax, and limitations on parking spaces for office facilities. Mobile source strategies include waiving or lowering any of the following for zero- or low-emitting vehicles: vehicle registration fees, vehicle property tax, sales tax, taxicab license fees, and parking taxes.

D. Subsidies

A State may create incentives for reducing emissions by offering direct subsidies, grants or low-interest loans to encourage the purchase of lower-emitting capital equipment, or a switch to less polluting operating practices. Examples of such programs include clean vehicle conversions, starting shuttle bus or van pool programs, and mass transit fare subsidies. Subsidy programs often suffer from a variety of ''free rider'' problems. For instance, subsidies for people or firms who were going to switch to the cleaner alternative anyway lower the effectiveness of the subsidy program, or drive up the cost of achieving a targeted level of emissions reductions.

E. Transportation Control Measures

The following measures are the TCM's listed in section 108(f):

(i) Programs for improved public transit;

(ii) Restriction of certain roads or lanes to, or construction of such roads or lanes for use by, passenger buses or high occupancy vehicles;

(iii) Employer-based transportation management plans, including incentives;

(iv) Trip-reduction ordinances;

(v) Traffic flow improvement programs that achieve emission reductions;

(vi) Fringe and transportation corridor parking facilities serving multiple-occupancy vehicle programs or transit service;

(vii) Programs to limit or restrict vehicle use in downtown areas or other areas of emission concentration particularly during periods of peak use;

(viii) Programs for the provision of all forms of high-occupancy, shared-ride services;

(ix) Programs to limit portions of road surfaces or certain sections of the metropolitan area to the use of non-motorized vehicles or pedestrian use, both as to time and place;

(x) Programs for secure bicycle storage facilities and other facilities, including bicycle lanes, for the convenience and protection of bicyclists, in both public and private areas;

(xi) Programs to control extended idling of vehicles;

(xii) Programs to reduce motor vehicle emissions, consistent with title II, which are caused by extreme cold start conditions;

(xiii) Employer-sponsored programs to permit flexible work schedules;

(xiv) Programs and ordinances to facilitate non-automobile travel, provision and utilization of mass transit, and to generally reduce the need for single-occupant vehicle travel, as part of transportation planning and development efforts of a locality, including programs and ordinances applicable to new shopping centers, special events, and other centers of vehicle activity;

(xv) Programs for new construction and major reconstruction of paths, tracks or areas solely for the use by pedestrian or other non-motorized means of transportation when economically feasible and in the public interest. For purposes of this clause, the Administrator shall also consult with the Secretary of the Interior; and

(xvi) Programs to encourage the voluntary removal from use and the marketplace of pre-1980 model year light-duty vehicles and pre-1980 model light-duty trucks.

[59 FR 16715, Apr. 7, 1994]