AUTHENTICATED
U.S. GOVERNMENT
INFORMATION
GPO

SUBCHAPTER A—GENERAL PROVISIONS

PART 1 [RESERVED]

PART 2—CONFIDENTIALITY OF ALCOHOL AND DRUG ABUSE PATIENT RECORDS

Subpart A—Introduction

Sec.
2.1 Statutory authority for confidentiality of drug abuse patient records.
2.2 Statutory authority for confidentiality of alcohol abuse patient records.
2.3 Purpose and effect.
2.4 Criminal penalty for violation.
2.5 Reports of violations.

Subpart B—General Provisions

2.11 Definitions.
2.12 Applicability.
2.13 Confidentiality restrictions.
2.14 Minor patients.
2.15 Incompetent and deceased patients.
2.16 Security for written records.
2.17 Undercover agents and informants.
2.18 Restrictions on the use of identification cards.
2.19 Disposition of records by discontinued programs.
2.20 Relationship to State laws.
2.21 Relationship to Federal statutes protecting research subjects against compulsory disclosure of their identity.
2.22 Notice to patients of Federal confidentiality requirements.
2.23 Patient access and restriction on use.

Subpart C—Disclosures With Patient's Consent

2.31 Form of written consent.
2.32 Prohibition on redisclosure.
2.33 Disclosures permitted with written consent.
2.34 Disclosures to prevent multiple enrollments in detoxification and maintenance treatment programs.
2.35 Disclosures to elements of the criminal justice system which have referred patients.

Subpart D—Disclosures Without Patient Consent

2.51 Medical emergencies.
2.52 Research activities.
2.53 Audit and evaluation activities.

Subpart E—Court Orders Authorizing Disclosures and Use

2.61 Legal effect of order.
2.62 Order not applicable to records disclosed without consent to researchers, auditors and evaluators.
2.63 Confidential communications.
2.64 Procedures and criteria for orders authorizing disclosures for noncriminal purposes.
2.65 Procedures and criteria for orders authorizing disclosure and use of records to criminally investigate or prosecute patients.
2.66 Procedures and criteria for orders authorizing disclosure and use of records to investigate or prosecute a program or the person holding the records.
2.67 Orders authorizing the use of undercover agents and informants to criminally investigate employees or agents of a program.

AUTHORITY: Sec. 408 of Pub. L. 92–255, 86 Stat. 79, as amended by sec. 303 (a), (b) of Pub L. 93–282, 83 Stat. 137, 138; sec. 4(c)(5)(A) of Pub. L. 94–237, 90 Stat. 244; sec. 111(c)(3) of Pub. L. 94–581, 90 Stat. 2852; sec. 509 of Pub. L. 96–88, 93 Stat. 695; sec. 973(d) of Pub. L. 97–35, 95 Stat. 598; and transferred to sec. 527 of the Public Health Service Act by sec. 2(b)(16)(B) of Pub. L. 98–24, 97 Stat. 182 and as amended by sec. 106 of Pub. L. 99–401, 100 Stat. 907 (42 U.S.C. 290ee–3) and sec. 333 of Pub. L. 91–616, 84 Stat. 1853, as amended by sec. 122(a) of Pub. L. 93–282, 88 Stat. 131; and sec. 111(c)(4) of Pub. L. 94–581, 90 Stat. 2852 and transferred to sec. 523 of the Public Health Service Act by sec. 2(b)(13) of Pub. L. 98–24, 97 Stat. 181 and as amended by sec. 106 of Pub. L. 99–401, 100 Stat. 907 (42 U.S.C. 290dd–3), as amended by sec. 131 of Pub. L. 102–321, 106 Stat. 368, (42 U.S.C. 290dd–2).

SOURCE: 52 FR 21809, June 9, 1987, unless otherwise noted.

Subpart A—Introduction

§ 2.1 Statutory authority for confidentiality of drug abuse patient records.

The restrictions of these regulations upon the disclosure and use of drug abuse patient records were initially authorized by section 408 of the Drug Abuse Prevention, Treatment, and Rehabilitation Act (21 U.S.C. 1175). That section as amended was transferred by Pub. L. 98–24 to section 527 of the Public Health Service Act which is codified

at 42 U.S.C. 290ee–3. The amended statutory authority is set forth below:

§ 290ee–3. CONFIDENTIALITY OF PATIENT RECORDS.

(a) *Disclosure authorization*

Records of the identity, diagnosis, prognosis, or treatment of any patient which are maintained in connection with the performance of any drug abuse prevention function conducted, regulated, or directly or indirectly assisted by any department or agency of the United States shall, except as provided in subsection (e) of this section, be confidential and be disclosed only for the purposes and under the circumstances expressly authorized under subsection (b) of this section.

(b) *Purposes and circumstances of disclosure affecting consenting patient and patient regardless of consent*

(1) The content of any record referred to in subsection (a) of this section may be disclosed in accordance with the prior written consent of the patient with respect to whom such record is maintained, but only to such extent, under such circumstances, and for such purposes as may be allowed under regulations prescribed pursuant to subsection (g) of this section.

(2) Whether or not the patient, with respect to whom any given record referred to in subsection (a) of this section is maintained, gives his written consent, the content of such record may be disclosed as follows:

(A) To medical personnel to the extent necessary to meet a bona fide medical emergency.

(B) To qualified personnel for the purpose of conducting scientific research, management audits, financial audits, or program evaluation, but such personnel may not identify, directly or indirectly, any individual patient in any report of such research, audit, or evaluation, or otherwise disclose patient identities in any manner.

(C) If authorized by an appropriate order of a court of competent jurisdiction granted after application showing good cause therefor. In assessing good cause the court shall weigh the public interest and the need for disclosure against the injury to the patient, to the physician-patient relationship, and to the treatment services. Upon the granting of such order, the court, in determining the extent to which any disclosure of all or any part of any record is necessary, shall impose appropriate safeguards against unauthorized disclosure.

(c) *Prohibition against use of record in making criminal charges or investigation of patient*

Except as authorized by a court order granted under subsection (b)(2)(C) of this section, no record referred to in subsection (a) of this section may be used to initiate or substantiate any criminal charges against a patient or to conduct any investigation of a patient.

(d) *Continuing prohibition against disclosure irrespective of status as patient*

The prohibitions of this section continue to apply to records concerning any individual who has been a patient, irrespective of whether or when he ceases to be a patient.

(e) *Armed Forces and Veterans' Administration; interchange of records; report of suspected child abuse and neglect to State or local authorities*

The prohibitions of this section do not apply to any interchange of records—

(1) within the Armed Forces or witrhin those components of the Veterans' Administration furnishing health care to veterans, or

(2) between such components and the Armed Forces.

The prohibitions of this section do not apply to the reporting under State law of incidents of suspected child abuse and neglect to the appropriate State or local authorities.

(f) *Penalty for first and subsequent offenses*

Any person who violates any provision of this section or any regulation issued pursuant to this section shall be fined not more than $500 in the case of a first offense, and not nore than $5,000 in the case of each subsequent offense.

(g) *Regulations; interagency consultations; definitions, safeguards, and procedures, including procedures and criteria for issuance and scope of orders*

Except as provided in subsection (h) of this section, the Secretary, after consultation with the Administrator of Veterans' Affairs and the heads of other Federal departments and agencies substantially affected thereby, shall prescribe regulations to carry out the purposes of this section. These regulations may contain such definitions, and may provide for such safeguards and procedures, including procedures and criteria for the issuance and scope of orders under subsection (b)(2)(C) of this section, as in the judgment of the Secretary are necessary or proper to effectuate the purposes of this section, to prevent circumvention or evasion thereof, or to facilitate compliance therewith.

(Subsection (h) was superseded by section 111(c)(3) of Pub. L. 94–581. The responsibility of the Administrator of Veterans' Affairs to write regulations to provide for confidentiality of drug abuse patient records under Title 38 was moved from 21 U.S.C. 1175 to 38 U.S.C. 4134.)

§ 2.2 Statutory authority for confidentiality of alcohol abuse patient records.

The restrictions of these regulations upon the disclosure and use of alcohol

abuse patient records were initially authorized by section 333 of the Comprehensive Alcohol Abuse and Alcoholism Prevention, Treatment, and Rehabilitation Act of 1970 (42 U.S.C. 4582). The section as amended was transferred by Pub. L. 98–24 to section 523 of the Public Health Service Act which is codified at 42 U.S.C. 290dd–3. The amended statutory authority is set forth below:

§290dd–3. CONFIDENTIALITY OF PATIENT RECORDS

(a) *Disclosure authorization*

Records of the identity, diagnosis, prognosis, or treatment of any patient which are maintained in connection with the performance of any program or activity relating to alcoholism or alcohol abuse education, training, treatment, rehabilitation, or research, which is conducted, regulated, or directly or indirectly assisted by any department or agency of the United States shall, except as provided in subsection (e) of this section, be confidential and be disclosed only for the purposes and under the circumstances expressly authorized under subsection (b) of this section.

(b) *Purposes and circumstances of disclosure affecting consenting patient and patient regardless of consent*

(1) The content of any record referred to in subsection (a) of this section may be disclosed in accordance with the prior written consent of the patient with respect to whom such record is maintained, but only to such extent, under such circumstances, and for such purposes as may be allowed under regulations prescribed pursuant to subsection (g) of this section.

(2) Whether or not the patient, with respect to whom any given record referred to in subsection (a) of this section is maintained, gives his written consent, the content of such record may be disclosed as follows:

(A) To medical personnel to the extent necessary to meet a bona fide medical emergency.

(B) To qualified personnel for the purpose of conducting scientific research, management audits, financial audits, or program evaluation, but such personnel may not identify, directly or indirectly, any individual patient in any report of such research, audit, or evaluation, or otherwise disclose patient identities in any manner.

(C) If authorized by an appropriate order of a court of competent jurisdiction granted after application showing good cause therefor. In assessing good cause the court shall weigh the public interest and the need for disclosure against the injury to the patient, to the physician-patient relationship, and to the treatment services. Upon the granting of such order, the court, in determining the extent to which any disclosure of all or any part of any record is necessary, shall impose appropriate safeguards against unauthorized disclosure.

(c) *Prohibition against use of record in making criminal charges or investigation of patient*

Except as authorized by a court order granted under subsection (b)(2)(C) of this section, no record referred to in subsection (a) of this section may be used to initiate or substantiate any criminal charges against a patient or to conduct any investigation of a patient.

(d) *Continuing prohibition against disclosure irrespective of status as patient*

The prohibitions of this section continue to apply to records concerning any individual who has been a patient, irrespective of whether or when he ceases to be a patient.

(e) *Armed Forces and Veterans' Administration; interchange of record of suspected child abuse and neglect to State or local authorities*

The prohibitions of this section do not apply to any interchange of records—

(1) within the Armed Forces or within those components of the Veterans' Administration furnishing health care to veterans, or

(2) between such components and the Armed Forces.

The prohibitions of this section do not apply to the reporting under State law of incidents of suspected child abuse and neglect to the appropriate State or local authorities.

(f) *Penalty for first and subsequent offenses*

Any person who violates any provision of this section or any regulation issued pursuant to this section shall be fined not more than $500 in the case of a first offense, and not more than $5,000 in the case of each subsequent offense.

(g) *Regulations of Secretary; definitions, safeguards, and procedures, including procedures and criteria for issuance and scope of orders*

Except as provided in subsection (h) of this section, the Secretary shall prescribe regulations to carry out the purposes of this section. These regulations may contain such definitions, and may provide for such safeguards and procedures, including procedures and criteria for the issuance and scope of orders under subsection(b)(2)(C) of this section, as in the judgment of the Secretary are necessary or proper to effectuate the purposes of this section, to prevent circumvention or evasion thereof, or to facilitate compliance therewith.

(Subsection (h) was superseded by section 111(c)(4) of Pub. L. 94–581. The responsibility of the Administrator of Veterans' Affairs to write regulations to provide for confidentiality of alcohol abuse patient records under Title 38 was moved from 42 U.S.C. 4582 to 38 U.S.C. 4134.)

§ 2.3 Purpose and effect.

(a) *Purpose.* Under the statutory provisions quoted in §§ 2.1 and 2.2, these regulations impose restrictions upon the disclosure and use of alcohol and drug abuse patient records which are maintained in connection with the performance of any federally assisted alcohol and drug abuse program. The regulations specify:

(1) Definitions, applicability, and general restrictions in subpart B (definitions applicable to § 2.34 only appear in that section);

(2) Disclosures which may be made with written patient consent and the form of the written consent in subpart C;

(3) Disclosures which may be made without written patient consent or an authorizing court order in subpart D; and

(4) Disclosures and uses of patient records which may be made with an authorizing court order and the procedures and criteria for the entry and scope of those orders in subpart E.

(b) *Effect.* (1) These regulations prohibit the disclosure and use of patient records unless certain circumstances exist. If any circumstances exists under which disclosure is permitted, that circumstance acts to remove the prohibition on disclosure but it does not compel disclosure. Thus, the regulations do not require disclosure under any circumstances.

(2) These regulations are not intended to direct the manner in which substantive functions such as research, treatment, and evaluation are carried out. They are intended to insure that an alcohol or drug abuse patient in a federally assisted alcohol or drug abuse program is not made more vulnerable by reason of the availability of his or her patient record than an individual who has an alcohol or drug problem and who does not seek treatment.

(3) Because there is a criminal penalty (a fine—see 42 U.S.C. 290ee–3(f), 42 U.S.C. 290dd–3(f) and 42 CFR 2.4) for violating the regulations, they are to be construed strictly in favor of the potential violator in the same manner as a criminal statute (see *M. Kraus & Brothers* v. *United States,* 327 U.S. 614, 621–22, 66 S. Ct. 705, 707–08 (1946)).

§ 2.4 Criminal penalty for violation.

Under 42 U.S.C. 290ee–3(f) and 42 U.S.C. 290dd–3(f), any person who violates any provision of those statutes or these regulations shall be fined not more than $500 in the case of a first offense, and not more than $5,000 in the case of each subsequent offense.

§ 2.5 Reports of violations.

(a) The report of any violation of these regulations may be directed to the United States Attorney for the judicial district in which the violation occurs.

(b) The report of any violation of these regulations by a methadone program may be directed to the Regional Offices of the Food and Drug Administration.

Subpart B—General Provisions

§ 2.11 Definitions.

For purposes of these regulations:

Alcohol abuse means the use of an alcoholic beverage which impairs the physical, mental, emotional, or social well-being of the user.

Drug abuse means the use of a psychoactive substance for other than medicinal purposes which impairs the physical, mental, emotional, or social well-being of the user.

Diagnosis means any reference to an individual's alcohol or drug abuse or to a condition which is identified as having been caused by that abuse which is made for the purpose of treatment or referral for treatment.

Disclose or disclosure means a communication of patient indentifying information, the affirmative verification of another person's communication of patient identifying information, or the communication of any information from the record of a patient who has been identified.

Informant means an individual:

(a) Who is a patient or employee of a program or who becomes a patient or employee of a program at the request of a law enforcement agency or official: and

(b) Who at the request of a law enforcement agency or official observes one or more patients or employees of

the program for the purpose of reporting the information obtained to the law enforcement agency or official.

Patient means any individual who has applied for or been given diagnosis or treatment for alcohol or drug abuse at a federally assisted program and includes any individual who, after arrest on a criminal charge, is identified as an alcohol or drug abuser in order to determine that individual's eligibility to participate in a program.

Patient identifying information means the name, address, social security number, fingerprints, photograph, or similar information by which the identity of a patient can be determined with reasonable accuracy and speed either directly or by reference to other publicly available information. The term does not include a number assigned to a patient by a program, if that number does not consist of, or contain numbers (such as a social security, or driver's license number) which could be used to identify a patient with reasonable accuracy and speed from sources external to the program.

Person means an individual, partnership, corporation, Federal, State or local government agency, or any other legal entity.

Program means:

(a) An individual or entity (other than a general medical care facility) who holds itself out as providing, and provides, alcohol or drug abuse diagnosis, treatment or referral for treatment; or

(b) An identified unit within a general medical facility which holds itself out as providing, and provides, alcohol or drug abuse diagnosis, treatment or referral for treatment; or

(c) Medical personnel or other staff in a general medical care facility whose primary function is the provision of alcohol or drug abuse diagnosis, treatment or referral for treatment and who are identified as such providers. (See §2.12(e)(1) for examples.)

Program director means:

(a) In the case of a program which is an individual, that individual:

(b) In the case of a program which is an organization, the individual designated as director, managing director, or otherwise vested with authority to act as chief executive of the organization.

Qualified service organization means a person which:

(a) Provides services to a program, such as data processing, bill collecting, dosage preparation, laboratory analyses, or legal, medical, accounting, or other professional services, or services to prevent or treat child abuse or neglect, including training on nutrition and child care and individual and group therapy, and

(b) Has entered into a written agreement with a program under which that person:

(1) Acknowledges that in receiving, storing, processing or otherwise dealing with any patient records from the progams, it is fully bound by these regulations; and

(2) If necessary, will resist in judicial proceedings any efforts to obtain access to patient records except as permitted by these regulations.

Records means any information, whether recorded or not, relating to a patient received or acquired by a federally assisted alcohol or drug program.

Third party payer means a person who pays, or agrees to pay, for diagnosis or treatment furnished to a patient on the basis of a contractual relationship with the patient or a member of his family or on the basis of the patient's eligibility for Federal, State, or local governmental benefits.

Treatment means the management and care of a patient suffering from alcohol or drug abuse, a condition which is identified as having been caused by that abuse, or both, in order to reduce or eliminate the adverse effects upon the patient.

Undercover agent means an officer of any Federal, State, or local law enforcement agency who enrolls in or becomes an employee of a program for the purpose of investigating a suspected violation of law or who pursues that purpose after enrolling or becoming employed for other purposes.

[52 FR 21809, June 9, 1987, as amended by 60 FR 22297, May 5, 1995]

§2.12 Applicability.

(a) *General*—(1) *Restrictions on disclosure.* The restrictions on disclosure in

these regulations apply to any information, whether or not recorded, which:

(i) Would identify a patient as an alcohol or drug abuser either directly, by reference to other publicly available information, or through verification of such an identification by another person; and

(ii) Is drug abuse information obtained by a federally assisted drug abuse program after March 20, 1972, or is alcohol abuse information obtained by a federally assisted alcohol abuse program after May 13, 1974 (or if obtained before the pertinent date, is maintained by a federally assisted alcohol or drug abuse program after that date as part of an ongoing treatment episode which extends past that date) for the purpose of treating alcohol or drug abuse, making a diagnosis for that treatment, or making a referral for that treatment.

(2) *Restriction on use.* The restriction on use of information to initiate or substantiate any criminal charges against a patient or to conduct any criminal investigation of a patient (42 U.S.C. 290ee–3(c), 42 U.S.C. 290dd–3(c)) applies to any information, whether or not recorded which is drug abuse information obtained by a federally assisted drug abuse program after March 20, 1972, or is alcohol abuse information obtained by a federally assisted alcohol abuse program after May 13, 1974 (or if obtained before the pertinent date, is maintained by a federally assisted alcohol or drug abuse program after that date as part of an ongoing treatment episode which extends past that date), for the purpose of treating alcohol or drug abuse, making a diagnosis for the treatment, or making a referral for the treatment.

(b) *Federal assistance.* An alcohol abuse or drug abuse program is considered to be federally assisted if:

(1) It is conducted in whole or in part, whether directly or by contract or otherwise by any department or agency of the United States (but see paragraphs (c)(1) and (c)(2) of this section relating to the Veterans' Administration and the Armed Forces);

(2) It is being carried out under a license, certification, registration, or other authorization granted by any department or agency of the United States including but not limited to:

(i) Certification of provider status under the Medicare program;

(ii) Authorization to conduct methadone maintenance treatment (see 21 CFR 291.505); or

(iii) Registration to dispense a substance under the Controlled Substances Act to the extent the controlled substance is used in the treatment of alcohol or drug abuse;

(3) It is supported by funds provided by any department or agency of the United States by being:

(i) A recipient of Federal financial assistance in any form, including financial assistance which does not directly pay for the alcohol or drug abuse diagnosis, treatment, or referral activities; or

(ii) Conducted by a State or local government unit which, through general or special revenue sharing or other forms of assistance, receives Federal funds which could be (but are not necessarily) spent for the alcohol or drug abuse program; or

(4) It is assisted by the Internal Revenue Service of the Department of the Treasury through the allowance of income tax deductions for contributions to the program or through the granting of tax exempt status to the program.

(c) *Exceptions*—(1) *Veterans' Administration.* These regulations do not apply to information on alcohol and drug abuse patients maintained in connection with the Veterans' Administration provisions of hospital care, nursing home care, domiciliary care, and medical services under title 38, United States Code. Those records are governed by 38 U.S.C. 4132 and regulations issued under that authority by the Administrator of Veterans' Affairs.

(2) *Armed Forces.* These regulations apply to any information described in paragraph (a) of this section which was obtained by any component of the Armed Forces during a period when the patient was subject to the Uniform Code of Military Justice except:

(i) Any interchange of that information within the Armed Forces; and

(ii) Any interchange of that information between the Armed Forces and

those components of the Veterans Administration furnishing health care to veterans.

(3) *Communication within a program or between a program and an entity having direct administrative control over that program.* The restrictions on disclosure in these regulations do not apply to communications of information between or among personnel having a need for the information in connection with their duties that arise out of the provision of diagnosis, treatment, or referral for treatment of alcohol or drug abuse if the communications are

(i) Within a program or

(ii) Between a program and an entity that has direct administrative control over the program.

(4) *Qualified Service Organizations.* The restrictions on disclosure in these regulations do not apply to communications between a program and a qualified service organization of information needed by the organization to provide services to the program.

(5) *Crimes on program premises or against program personnel.* The restrictions on disclosure and use in these regulations do not apply to communications from program personnel to law enforcement officers which—

(i) Are directly related to a patient's commission of a crime on the premises of the program or against program personnel or to a threat to commit such a crime; and

(ii) Are limited to the circumstances of the incident, including the patient status of the individual committing or threatening to commit the crime, that individual's name and address, and that individual's last known whereabouts.

(6) *Reports of suspected child abuse and neglect.* The restrictions on disclosure and use in these regulations do not apply to the reporting under State law of incidents of suspected child abuse and neglect to the appropriate State or local authorities. However, the restrictions continue to apply to the original alcohol or drug abuse patient records maintained by the program including their disclosure and use for civil or criminal proceedings which may arise out of the report of suspected child abuse and neglect.

(d) *Applicability to recipients of information*—(1) *Restriction on use of information.* The restriction on the use of any information subject to these regulations to initiate or substantiate any criminal charges against a patient or to conduct any criminal investigation of a patient applies to any person who obtains that information from a federally assisted alcohol or drug abuse program, regardless of the status of the person obtaining the information or of whether the information was obtained in accordance with these regulations. This restriction on use bars, among other things, the introduction of that information as evidence in a criminal proceeding and any other use of the information to investigate or prosecute a patient with respect to a suspected crime. Information obtained by undercover agents or informants (see § 2.17) or through patient access (see § 2.23) is subject to the restriction on use.

(2) *Restrictions on disclosures—Third party payers, administrative entities, and others.* The restrictions on disclosure in these regulations apply to:

(i) Third party payers with regard to records disclosed to them by federally assisted alcohol or drug abuse programs;

(ii) Entities having direct administrative control over programs with regard to information communicated to them by the program under § 2.12(c)(3); and

(iii) Persons who receive patient records directly from a federally assisted alcohol or drug abuse program and who are notified of the restrictions on redisclosure of the records in accordance with § 2.32 of these regulations.

(e) *Explanation of applicability*—(1) *Coverage.* These regulations cover any information (including information on referral and intake) about alcohol and drug abuse patients obtained by a program (as the terms ''patient'' and ''program'' are defined in § 2.11) if the program is federally assisted in any manner described in § 2.12(b). Coverage includes, but is not limited to, those treatment or rehabilitation programs, employee assistance programs, programs within general hospitals, school-based programs, and private practitioners who hold themselves out as

providing, and provide alcohol or drug abuse diagnosis, treatment, or referral for treatment. However, these regulations would not apply, for example, to emergency room personnel who refer a patient to the intensive care unit for an apparent overdose, unless the primary function of such personnel is the provision of alcohol or drug abuse diagnosis, treatment or referral and they are identified as providing such services or the emergency room has promoted itself to the community as a provider of such services.

(2) *Federal assistance to program required.* If a patient's alcohol or drug abuse diagnosis, treatment, or referral for treatment is not provided by a program which is federally conducted, regulated or supported in a manner which constitutes Federal assistance under §2.12(b), that patient's record is not covered by these regulations. Thus, it is possible for an individual patient to benefit from Federal support and not be covered by the confidentiality regulations because the program in which the patient is enrolled is not federally assisted as defined in §2.12(b). For example, if a Federal court placed an individual in a private for-profit program and made a payment to the program on behalf of that individual, that patient's record would not be covered by these regulations unless the program itself received Federal assistance as defined by §2.12(b).

(3) *Information to which restrictions are applicable.* Whether a restriction is on use or disclosure affects the type of information which may be available. The restrictions on disclosure apply to any information which would identify a patient as an alcohol or drug abuser. The restriction on use of information to bring criminal charges against a patient for a crime applies to any information obtained by the program for the purpose of diagnosis, treatment, or referral for treatment of alcohol or drug abuse. (Note that restrictions on use and disclosure apply to recipients of information under §2.12(d).)

(4) *How type of diagnosis affects coverage.* These regulations cover any record of a diagnosis identifying a patient as an alcohol or drug abuser which is prepared in connection with the treatment or referral for treatment of alcohol or drug abuse. A diagnosis prepared for the purpose of treatment or referral for treatment but which is not so used is covered by these regulations. The following are not covered by these regulations:

(i) Diagnosis which is made solely for the purpose of providing evidence for use by law enforcement authorities; or

(ii) A diagnosis of drug overdose or alcohol intoxication which clearly shows that the individual involved is not an alcohol or drug abuser (e.g., involuntary ingestion of alcohol or drugs or reaction to a prescribed dosage of one or more drugs).

[52 FR 21809, June 9, 1987; 52 FR 42061, Nov. 2, 1987, as amended at 60 FR 22297, May 5, 1995]

§ 2.13 Confidentiality restrictions.

(a) *General.* The patient records to which these regulations apply may be disclosed or used only as permitted by these regulations and may not otherwise be disclosed or used in any civil, criminal, administrative, or legislative proceedings conducted by any Federal, State, or local authority. Any disclosure made under these regulations must be limited to that information which is necessary to carry out the purpose of the disclosure.

(b) *Unconditional compliance required.* The restrictions on disclosure and use in these regulations apply whether the holder of the information believes that the person seeking the information already has it, has other means of obtaining it, is a law enforcement or other official, has obtained a subpoena, or asserts any other justification for a disclosure or use which is not permitted by these regulations.

(c) *Acknowledging the presence of patients: Responding to requests.* (1) The presence of an identified patient in a facility or component of a facility which is publicly identified as a place where only alcohol or drug abuse diagnosis, treatment, or referral is provided may be acknowledged only if the patient's written consent is obtained in accordance with subpart C of these regulations or if an authorizing court order is entered in accordance with subpart E of these regulations. The regulations permit acknowledgement of the presence of an identified patient in a facility or part of a facility if the

facility is not publicy identified as only an alcohol or drug abuse diagnosis, treatment or referral facility, and if the acknowledgement does not reveal that the patient is an alcohol or drug abuser.

(2) Any answer to a request for a disclosure of patient records which is not permissible under these regulations must be made in a way that will not affirmatively reveal that an identified individual has been, or is being diagnosed or treated for alcohol or drug abuse. An inquiring party may be given a copy of these regulations and advised that they restrict the disclosure of alcohol or drug abuse patient records, but may not be told affirmatively that the regulations restrict the disclosure of the records of an identified patient. The regulations do not restrict a disclosure that an identified individual is not and never has been a patient.

§2.14 Minor patients.

(a) *Definition of minor.* As used in these regulations the term ''minor'' means a person who has not attained the age of majority specified in the applicable State law, or if no age of majority is specified in the applicable State law, the age of eighteen years.

(b) *State law not requiring parental consent to treatment.* If a minor patient acting alone has the legal capacity under the applicable State law to apply for and obtain alcohol or drug abuse treatment, any written consent for disclosure authorized under subpart C of these regulations may be given only by the minor patient. This restriction includes, but is not limited to, any disclosure of patient identifying information to the parent or guardian of a minor patient for the purpose of obtaining financial reimbursement. These regulations do not prohibit a program from refusing to provide treatment until the minor patient consents to the disclosure necessary to obtain reimbursement, but refusal to provide treatment may be prohibited under a State or local law requiring the program to furnish the service irrespective of ability to pay.

(c) *State law requiring parental consent to treatment.* (1) Where State law requires consent of a parent, guardian, or other person for a minor to obtain alcohol or drug abuse treatment, any written consent for disclosure authorized under subpart C of these regulations must be given by both the minor and his or her parent, guardian, or other person authorized under State law to act in the minor's behalf.

(2) Where State law requires parental consent to treatment the fact of a minor's application for treatment may be communicated to the minor's parent, guardian, or other person authorized under State law to act in the minor's behalf only if:

(i) The minor has given written consent to the disclosure in accordance with subpart C of these regulations or

(ii) The minor lacks the capacity to make a rational choice regarding such consent as judged by the program director under paragraph (d) of this section.

(d) *Minor applicant for services lacks capacity for rational choice.* Facts relevant to reducing a threat to the life or physical well being of the applicant or any other individual may be disclosed to the parent, guardian, or other person authorized under State law to act in the minor's behalf if the program director judges that:

(1) A minor applicant for services lacks capacity because of extreme youth or mental or physical condition to make a rational decision on whether to consent to a disclosure under subpart C of these regulations to his or her parent, guardian, or other person authorized under State law to act in the minor's behalf, and

(2) The applicant's situation poses a substantial threat to the life or physical well being of the applicant or any other individual which may be reduced by communicating relevant facts to the minor's parent, guardian, or other person authorized under State law to act in the minor's behalf.

§2.15 Incompetent and deceased patients.

(a) *Incompetent patients other than minors*—(1) *Adjudication of incompetence.* In the case of a patient who has been adjudicated as lacking the capacity, for any reason other than insufficient age, to manage his or her own affairs, any consent which is required under these regulations may be given by the

guardian or other person authorized under State law to act in the patient's behalf.

(2) *No adjudication of incompetency.* For any period for which the program director determines that a patient, other than a minor or one who has been adjudicated incompetent, suffers from a medical condition that prevents knowing or effective action on his or her own behalf, the program director may exercise the right of the patient to consent to a disclosure under subpart C of these regulations for the sole purpose of obtaining payment for services from a third party payer.

(b) *Deceased patients*—(1) *Vital statistics.* These regulations do not restrict the disclosure of patient identifying information relating to the cause of death of a patient under laws requiring the collection of death or other vital statistics or permitting inquiry into the cause of death.

(2) *Consent by personal representative.* Any other disclosure of information identifying a deceased patient as an alcohol or drug abuser is subject to these regulations. If a written consent to the disclosure is required, that consent may be given by an executor, administrator, or other personal representative appointed under applicable State law. If there is no such appointment the consent may be given by the patient's spouse or, if none, by any responsible member of the patient's family.

§ 2.16 Security for written records.

(a) Written records which are subject to these regulations must be maintained in a secure room, locked file cabinet, safe or other similar container when not in use; and

(b) Each program shall adopt in writing procedures which regulate and control access to and use of written records which are subject to these regulations.

§ 2.17 Undercover agents and informants.

(a) *Restrictions on placement.* Except as specifically authorized by a court order granted under § 2.67 of these regulations, no program may knowingly employ, or enroll as a patient, any undercover agent or informant.

(b) *Restriction on use of information.* No information obtained by an undercover agent or informant, whether or not that undercover agent or informant is placed in a program pursuant to an authorizing court order, may be used to criminally investigate or prosecute any patient.

[52 FR 21809, June 9, 1987; 52 FR 42061, Nov. 2, 1987]

§ 2.18 Restrictions on the use of identification cards.

No person may require any patient to carry on his or her person while away from the program premises any card or other object which would identify the patient as an alcohol or drug abuser. This section does not prohibit a person from requiring patients to use or carry cards or other identification objects on the premises of a program.

§ 2.19 Disposition of records by discontinued programs.

(a) *General.* If a program discontinues operations or is taken over or acquired by another program, it must purge patient identifying information from its records or destroy the records unless—

(1) The patient who is the subject of the records gives written consent (meeting the requirements of § 2.31) to a transfer of the records to the acquiring program or to any other program designated in the consent (the manner of obtaining this consent must minimize the likelihood of a disclosure of patient identifying information to a third party); or

(2) There is a legal requirement that the records be kept for a period specified by law which does not expire until after the discontinuation or acquisition of the program.

(b) *Procedure where retention period required by law.* If paragraph (a)(2) of this section applies, the records must be:

(1) Sealed in envelopes or other containers labeled as follows: ''Records of [insert name of program] required to be maintained under [insert citation to statute, regulation, court order or other legal authority requiring that records be kept] until a date not later than [insert appropriate date]''; and

(2) Held under the restrictions of these regulations by a responsible person who must, as soon as practicable

after the end of the retention period specified on the label, destroy the records.

§ 2.20 Relationship to State laws.

The statutes authorizing these regulations (42 U.S.C. 290ee–3 and 42 U.S.C. 290dd–3) do not preempt the field of law which they cover to the exclusion of all State laws in that field. If a disclosure permitted under these regulations is prohibited under State law, neither these regulations nor the authorizing statutes may be construed to authorize any violation of that State law. However, no State law may either authorize or compel any disclosure prohibited by these regulations.

§ 2.21 Relationship to Federal statutes protecting research subjects against compulsory disclosure of their identity.

(a) *Research privilege description.* There may be concurrent coverage of patient identifying information by these regulations and by administrative action taken under: Section 303(a) of the Public Health Service Act (42 U.S.C. 242a(a) and the implementing regulations at 42 CFR part 2a); or section 502(c) of the Controlled Substances Act (21 U.S.C. 872(c) and the implementing regulations at 21 CFR 1316.21). These ''research privilege'' statutes confer on the Secretary of Health and Human Services and on the Attorney General, respectively, the power to authorize researchers conducting certain types of research to withhold from all persons not connected with the research the names and other identifying information concerning individuals who are the subjects of the research.

(b) *Effect of concurrent coverage.* These regulations restrict the disclosure and use of information about patients, while administrative action taken under the research privilege statutes and implementing regulations protects a person engaged in applicable research from being compelled to disclose any identifying characteristics of the individuals who are the subjects of that research. The issuance under subpart E of these regulations of a court order authorizing a disclosure of information about a patient does not affect an exercise of authority under these research privilege statutes. However, the research privilage granted under 21 CFR 291.505(g) to treatment programs using methadone for maintenance treatment does not protect from compulsory disclosure any imformation which is permitted to be disclosed under those regulations. Thus, if a court order entered in accordance with subpart E of these regulations authorizes a methadone maintenance treatment program to disclose certain information about its patients, that program may not invoke the research privilege under 21 CFR 291.505(g) as a defense to a subpoena for that information.

§ 2.22 Notice to patients of Federal confidentiality requirements.

(a) *Notice required.* At the time of admission or as soon threreafter as the patient is capable of rational communication, each program shall:

(1) Communicate to the patient that Federal law and regulations protect the confidentiality of alcohol and drug abuse patient records; and

(2) Give to the patient a summary in writing of the Federal law and regulations.

(b) *Required elements of written summary.* The written summary of the Federal law and regulations must include:

(1) A general description of the limited circumstances under which a program may acknowledge that an individual is present at a facility or disclose outside the program information identifying a patient as an alcohol or drug abuser.

(2) A statement that violation of the Federal law and regulations by a program is a crime and that suspected violations may be reported to appropriate authorities in accordance with these regulations.

(3) A statement that information related to a patient's commission of a crime on the premises of the program or against personnel of the program is not protected.

(4) A statement that reports of suspected child abuse and neglect made under State law to appropriate State or local authorities are not protected.

(5) A citation to the Federal law and regulations.

(c) *Program options.* The program may devise its own notice or may use the

sample notice in paragraph (d) to comply with the requirement to provide the patient with a summary in writing of the Federal law and regulations. In addition, the program may include in the written summary information concerning State law and any program policy not inconsistent with State and Federal law on the subject of confidentiality of alcohol and drug abuse patient records.

(d) *Sample notice.*

CONFIDENTIALITY OF ALCOHOL AND DRUG ABUSE PATIENT RECORDS

The confidentiality of alcohol and drug abuse patient records maintained by this program is protected by Federal law and regulations. Generally, the program may not say to a person outside the program that a patient attends the program, or disclose any information identifying a patient as an alcohol or drug abuser *Unless:*

(1) The patient consents in writing:

(2) The disclosure is allowed by a court order; or

(3) The disclosure is made to medical personnel in a medical emergency or to qualified personnel for research, audit, or program evaluation.

Violation of the Federal law and regulations by a program is a crime. Suspected violations may be reported to appropriate authorities in accordance with Federal regulations.

Federal law and regulations do not protect any information about a crime committed by a patient either at the program or against any person who works for the program or about any threat to commit such a crime.

Federal laws and regulations do not protect any information about suspected child abuse or neglect from being reported under State law to appropriate State or local authorities.

(See 42 U.S.C. 290dd–3 and 42 U.S.C. 290ee–3 for Federal laws and 42 CFR part 2 for Federal regulations.)

(Approved by the Office of Management and Budget under control number 0930–0099)

§ 2.23 Patient access and restrictions on use.

(a) *Patient access not prohibited.* These regulations do not prohibit a program from giving a patient access to his or her own records, including the opportunity to inspect and copy any records that the program maintains about the patient. The program is not required to obtain a patient's written consent or other authorization under these regulations in order to provide such access to the patient.

(b) *Restriction on use of information.* Information obtained by patient access to his or her patient record is subject to the restriction on use of his information to initiate or substantiate any criminal charges against the patient or to conduct any criminal investigation of the patient as provided for under § 2.12(d)(1).

Subpart C—Disclosures With Patient's Consent

§ 2.31 Form of written consent.

(a) *Required elements.* A written consent to a disclosure under these regulations must include:

(1) The specific name or general designation of the program or person permitted to make the disclosure.

(2) The name or title of the individual or the name of the organization to which disclosure is to be made.

(3) The name of the patient.

(4) The purpose of the disclosure.

(5) How much and what kind of information is to be disclosed.

(6) The signature of the patient and, when required for a patient who is a minor, the signature of a person authorized to give consent under § 2.14; or, when required for a patient who is incompetent or deceased, the signature of a person authorized to sign under § 2.15 in lieu of the patient.

(7) The date on which the consent is signed.

(8) A statement that the consent is subject to revocation at any time except to the extent that the program or person which is to make the disclosure has already acted in reliance on it. Acting in reliance includes the provision of treatment services in reliance on a valid consent to disclose information to a third party payer.

(9) The date, event, or condition upon which the consent will expire if not revoked before. This date, event, or condition must insure that the consent will last no longer than reasonably necessary to serve the purpose for which it is given.

(b) *Sample consent form.* The following form complies with paragraph (a) of this section, but other elements may be added.

1. I (name of patient) ☐ Request ☐ Authorize:
2. (name or general designation of program which is to make the disclosure)
☐☐☐☐☐☐☐☐☐☐☐☐☐☐☐☐☐☐☐☐☐☐☐☐☐☐☐☐
3. To disclose: (kind and amount of information to be disclosed)
☐☐☐☐☐☐☐☐☐☐☐☐☐☐☐☐☐☐☐☐☐☐☐☐☐☐☐☐
4. To: (name or title of the person or organization to which disclosure is to be made)
☐☐☐☐☐☐☐☐☐☐☐☐☐☐☐☐☐☐☐☐☐☐☐☐☐☐☐☐
5. For (purpose of the disclosure)
☐☐☐☐☐☐☐☐☐☐☐☐☐☐☐☐☐☐☐☐☐☐☐☐☐☐☐☐
6. Date (on which this consent is signed)
☐☐☐☐☐☐☐☐☐☐☐☐☐☐☐☐☐☐☐☐☐☐☐☐☐☐☐☐
7. Signature of patient
☐☐☐☐☐☐☐☐☐☐☐☐☐☐☐☐☐☐☐☐☐☐☐☐☐☐☐☐
8. Signature of parent or guardian (where required)
☐☐☐☐☐☐☐☐☐☐☐☐☐☐☐☐☐☐☐☐☐☐☐☐☐☐☐☐
9. Signature of person authorized to sign in lieu of the patient (where required)
☐☐☐☐☐☐☐☐☐☐☐☐☐☐☐☐☐☐☐☐☐☐☐☐☐☐☐☐
10. This consent is subject to revocation at any time except to the extent that the program which is to make the disclosure has already taken action in reliance on it. If not previously revoked, this consent will terminate upon: (specific date, event, or condition)

(c) *Expired, deficient, or false consent.* A disclosure may not be made on the basis of a consent which:

(1) Has expired;

(2) On its face substantially fails to conform to any of the requirements set forth in paragraph (a) of this section;

(3) Is known to have been revoked; or

(4) Is known, or through a reasonable effort could be known, by the person holding the records to be materially false.

(Approved by the Office of Management and Budget under control number 0930–0099)

§2.32 Prohibition on redisclosure.

Notice to accompany disclosure. Each disclosure made with the patient's written consent must be accompanied by the following written statement:

This information has been disclosed to you from records protected by Federal confidentiality rules (42 CFR part 2). The Federal rules prohibit you from making any further disclosure of this information unless further disclosure is expressly permitted by the written consent of the person to whom it pertains or as otherwise permitted by 42 CFR part 2. A general authorization for the release of medical or other information is NOT sufficient for this purpose. The Federal rules restrict any use of the information to criminally investigate or prosecute any alcohol or drug abuse patient.

[52 FR 21809, June 9, 1987; 52 FR 41997, Nov. 2, 1987]

§2.33 Disclosures permitted with written consent.

If a patient consents to a disclosure of his or her records under §2.31, a program may disclose those records in accordance with that consent to any individual or organization named in the consent, except that disclosures to central registries and in connection with criminal justice referrals must meet the requirements of §§2.34 and 2.35, respectively.

§2.34 Disclosures to prevent multiple enrollments in detoxification and maintenance treatment programs.

(a) *Definitions.* For purposes of this section:

Central registry means an organization which obtains from two or more member progams patient identifying information about individuals applying for maintenance treatment or detoxification treatment for the purpose of avoiding an individual's concurrent enrollment in more than one program.

Detoxification treatment means the dispensing of a narcotic drug in decreasing doses to an individual in order to reduce or eliminate adverse physiological or psychological effects incident to withdrawal from the sustained use of a narcotic drug.

Maintenance treatment means the dispensing of a narcotic drug in the treatment of an individual for dependence upon heroin or other morphine-like drugs.

Member program means a detoxification treatment or maintenance treatment program which reports patient identifying information to a central registry and which is in the same State as that central registry or is not more than 125 miles from any border of the State in which the central registry is located.

(b) *Restrictions on disclosure.* A program may disclose patient records to a central registry or to any detoxification or maintenance treatment program not more than 200 miles away for the purpose of preventing the multiple enrollment of a patient only if:

(1) The disclosure is made when:

(i) The patient is accepted for treatment;

(ii) The type or dosage of the drug is changed; or

(iii) The treatment is interrupted, resumed or terminated.

(2) The disclosure is limited to:

(i) Patient identifying information;

(ii) Type and dosage of the drug; and

(iii) Relevant dates.

(3) The disclosure is made with the patient's written consent meeting the requirements of § 2.31, except that:

(i) The consent must list the name and address of each central registry and each known detoxification or maintenance treatment program to which a disclosure will be made; and

(ii) The consent may authorize a disclosure to any detoxification or maintenance treatment program established within 200 miles of the program after the consent is given without naming any such program.

(c) *Use of information limited to prevention of multiple enrollments.* A central registry and any detoxification or maintenance treatment program to which information is disclosed to prevent multiple enrollments may not redisclose or use patient identifying information for any purpose other than the prevention of multiple enrollments unless authorized by a court order under subpart E of these regulations.

(d) *Permitted disclosure by a central registry to prevent a multiple enrollment.* When a member program asks a central registry if an identified patient is enrolled in another member program and the registry determines that the patient is so enrolled, the registry may disclose—

(1) The name, address, and telephone number of the member program(s) in which the patient is already enrolled to the inquiring member program; and

(2) The name, address, and telephone number of the inquiring member program to the member program(s) in which the patient is already enrolled. The member programs may communicate as necessary to verify that no error has been made and to prevent or eliminate any multiple enrollment.

(e) *Permitted disclosure by a detoxification or maintenance treatment program to prevent a multiple enrollment.* A detoxification or maintenance treatment program which has received a disclosure under this section and has determined that the patient is already enrolled may communicate as necessary with the program making the disclosure to verify that no error has been made and to prevent or eliminate any multiple enrollment.

§ 2.35 Disclosures to elements of the criminal justice system which have referred patients.

(a) A program may disclose information about a patient to those persons within the criminal justice system which have made participation in the program a condition of the disposition of any criminal proceedings against the patient or of the patient's parole or other release from custody if:

(1) The disclosure is made only to those individuals within the criminal justice system who have a need for the information in connection with their duty to monitor the patient's progress (e.g., a prosecuting attorney who is withholding charges against the patient, a court granting pretrial or posttrial release, probation or parole officers responsible for supervision of the patient); and

(2) The patient has signed a written consent meeting the requirements of § 2.31 (except paragraph (a)(8) which is inconsistent with the revocation provisions of paragraph (c) of this section) and the requirements of paragraphs (b) and (c) of this section.

(b) *Duration of consent.* The written consent must state the period during which it remains in effect. This period must be reasonable, taking into account:

(1) The anticipated length of the treatment;

(2) The type of criminal proceeding involved, the need for the information in connection with the final disposition of that proceeding, and when the final disposition will occur; and

(3) Such other factors as the program, the patient, and the person(s) who will receive the disclosure consider pertinent.

(c) *Revocation of consent.* The written consent must state that it is revocable upon the passage of a specified amount of time or the occurrence of a specified,

ascertainable event. The time or occurrence upon which consent becomes revocable may be no later than the final disposition of the conditional release or other action in connection with which consent was given.

(d) *Restrictions on redisclosure and use.* A person who receives patient information under this section may redisclose and use it only to carry out that person's official duties with regard to the patient's conditional release or other action in connection with which the consent was given.

Subpart D—Disclosures Without Patient Consent

§ 2.51 Medical emergencies.

(a) *General Rule.* Under the procedures required by paragraph (c) of this section, patient identifying information may be disclosed to medical personnel who have a need for information about a patient for the purpose of treating a condition which poses an immediate threat to the health of any individual and which requires immediate medical intervention.

(b) *Special Rule.* Patient identifying information may be disclosed to medical personnel of the Food and Drug Administration (FDA) who assert a reason to believe that the health of any individual may be threatened by an error in the manufacture, labeling, or sale of a product under FDA jurisdiction, and that the information will be used for the exclusive purpose of notifying patients or their physicians of potential dangers.

(c) *Procedures.* Immediately following disclosure, the program shall document the disclosure in the patient's records, setting forth in writing:

(1) The name of the medical personnel to whom disclosure was made and their affiliation with any health care facility;

(2) The name of the individual making the disclosure;

(3) The date and time of the disclosure; and

(4) The nature of the emergency (or error, if the report was to FDA).

(Approved by the Office of Management and Budget under control number 0930–0099)

§ 2.52 Research activities.

(a) Patient identifying information may be disclosed for the purpose of conducting scientific research if the program director makes a determination that the recipient of the patient identifying information:

(1) Is qualified to conduct the research;

(2) Has a research protocol under which the patient identifying information:

(i) Will be maintained in accordance with the security requirements of § 2.16 of these regulations (or more stringent requirements); and

(ii) Will not be redisclosed except as permitted under paragraph (b) of this section; and

(3) Has provided a satisfactory written statement that a group of three or more individuals who are independent of the research project has reviewed the protocol and determined that:

(i) The rights and welfare of patients will be adequately protected; and

(ii) The risks in disclosing patient identifying information are outweighed by the potential benefits of the research.

(b) A person conducting research may disclose patient identifying information obtained under paragraph (a) of this section only back to the program from which that information was obtained and may not identify any individual patient in any report of that research or otherwise disclose patient identities.

[52 FR 21809, June 9, 1987, as amended at 52 FR 41997, Nov. 2, 1987]

§ 2.53 Audit and evaluation activities.

(a) *Records not copied or removed.* If patient records are not copied or removed, patient identifying information may be disclosed in the course of a review of records on program premises to any person who agrees in writing to comply with the limitations on redisclosure and use in paragraph (d) of this section and who:

(1) Performs the audit or evaluation activity on behalf of:

(i) Any Federal, State, or local governmental agency which provides financial assistance to the program or is

authorized by law to regulate its activities; or

(ii) Any private person which provides financial assistance to the program, which is a third party payer covering patients in the program, or which is a peer review organization performing a utilization or quality control review; or

(2) Is determined by the program director to be qualified to conduct the audit or evaluation activities.

(b) *Copying or removal of records.* Records containing patient identifying information may be copied or removed from program premises by any person who:

(1) Agrees in writing to:

(i) Maintain the patient identifying information in accordance with the security requirements provided in §2.16 of these regulations (or more stringent requirements);

(ii) Destroy all the patient identifying information upon completion of the audit or evaluation; and

(iii) Comply with the limitations on disclosure and use in paragraph (d) of this section; and

(2) Performs the audit or evaluation activity on behalf of:

(i) Any Federal, State, or local governmental agency which provides financial assistance to the program or is authorized by law to regulate its activities; or

(ii) Any private person which provides financial assistance to the program, which is a third part payer covering patients in the program, or which is a peer review organization performing a utilization or quality control review.

(c) *Medicare or Medicaid audit or evaluation.* (1) For purposes of Medicare or Medicaid audit or evaluation under this section, audit or evaluation includes a civil or administrative investigation of the program by any Federal, State, or local agency responsible for oversight of the Medicare or Medicaid program and includes administrative enforcement, against the program by the agency, of any remedy authorized by law to be imposed as a result of the findings of the investigation.

(2) Consistent with the definition of program in §2.11, program includes an employee of, or provider of medical services under, the program when the employee or provider is the subject of a civil investigation or administrative remedy, as those terms are used in paragraph (c)(1) of this section.

(3) If a disclosure to a person is authorized under this section for a Medicare or Medicaid audit or evaluation, including a civil investigation or administrative remedy, as those terms are used in paragraph (c)(1) of this section, then a peer review organization which obtains the information under paragraph (a) or (b) may disclose the information to that person but only for purposes of Medicare or Medicaid audit or evaluation.

(4) The provisions of this paragraph do not authorize the agency, the program, or any other person to disclose or use patient identifying information obtained during the audit or evaluation for any purposes other than those necessary to complete the Medicare or Medicaid audit or evaluation activity as specified in this paragraph.

(d) *Limitations on disclosure and use.* Except as provided in paragraph (c) of this section, patient identifying information disclosed under this section may be disclosed only back to the program from which it was obtained and used only to carry out an audit or evaluation purpose or to investigate or prosecute criminal or other activities, as authorized by a court order entered under §2.66 of these regulations.

Subpart E—Court Orders Authorizing Disclosure and Use

§ 2.61 Legal effect of order.

(a) *Effect.* An order of a court of competent jurisdiction entered under this subpart is a unique kind of court order. Its only purpose is to authorize a disclosure or use of patient information which would otherwise be prohibited by 42 U.S.C. 290ee–3, 42 U.S.C. 290dd–3 and these regulations. Such an order does not compel disclosure. A subpoena or a similar legal mandate must be issued in order to compel disclosure. This mandate may be entered at the same time as and accompany an authorizing court order entered under these regulations.

(b) *Examples.* (1) A person holding records subject to these regulations receives a subpoena for those records: a response to the subpoena is not permitted under the regulations unless an authorizing court order is entered. The person may not disclose the records in response to the subpoena unless a court of competent jurisdiction enters an authorizing order under these regulations.

(2) An authorizing court order is entered under these regulations, but the person authorized does not want to make the disclosure. If there is no subpoena or other compulsory process or a subpoena for the records has expired or been quashed, that person may refuse to make the disclosure. Upon the entry of a valid subpoena or other compulsory process the person authorized to disclose must disclose, unless there is a valid legal defense to the process other than the confidentiality restrictions of these regulations.

[52 FR 21809, June 9, 1987; 52 FR 42061, Nov. 2, 1987]

§ 2.62 Order not applicable to records disclosed without consent to researchers, auditors and evaluators.

A court order under these regulations may not authorize qualified personnel, who have received patient identifying information without consent for the purpose of conducting research, audit or evaluation, to disclose that information or use it to conduct any criminal investigation or prosecution of a patient. However, a court order under § 2.66 may authorize disclosure and use of records to investigate or prosecute qualified personnel holding the records.

§ 2.63 Confidential communications.

(a) A court order under these regulations may authorize disclosure of confidential communications made by a patient to a program in the course of diagnosis, treatment, or referral for treatment only if:

(1) The disclosure is necessary to protect against an existing threat to life or of serious bodily injury, including circumstances which constitute suspected child abuse and neglect and verbal threats against third parties;

(2) The disclosure is necessary in connection with investigation or prosecution of an extremely serious crime, such as one which directly threatens loss of life or serious bodily injury, including homicide, rape, kidnapping, armed robbery, assault with a deadly weapon, or child abuse and neglect; or

(3) The disclosure is in connection with litigation or an administrative proceeding in which the patient offers testimony or other evidence pertaining to the content of the confidential communications.

(b) [Reserved]

§ 2.64 Procedures and criteria for orders authorizing disclosures for noncriminal purposes.

(a) *Application.* An order authorizing the disclosure of patient records for purposes other than criminal investigation or prosecution may be applied for by any person having a legally recognized interest in the disclosure which is sought. The application may be filed separately or as part of a pending civil action in which it appears that the patient records are needed to provide evidence. An application must use a fictitious name, such as John Doe, to refer to any patient and may not contain or otherwise disclose any patient identifying information unless the patient is the applicant or has given a written consent (meeting the requirements of these regulations) to disclosure or the court has ordered the record of the proceeding sealed from public scrunity.

(b) *Notice.* The patient and the person holding the records from whom disclosure is sought must be given:

(1) Adequate notice in a manner which will not disclose patient identifying information to other persons; and

(2) An opportunity to file a written response to the application, or to appear in person, for the limited purpose of providing evidence on the statutory and regulatory criteria for the issuance of the court order.

(c) *Review of evidence: Conduct of hearing.* Any oral argument, review of evidence, or hearing on the application must be held in the judge's chambers or in some manner which ensures that patient identifying information is not disclosed to anyone other than a party to the proceeding, the patient, or the person holding the record, unless the patient requests an open hearing in a

manner which meets the written consent requirements of these regulations. The proceeding may include an examination by the judge of the patient records referred to in the application.

(d) *Criteria for entry of order.* An order under this section may be entered only if the court determines that good cause exists. To make this determination the court must find that:

(1) Other ways of obtaining the information are not available or would not be effective; and

(2) The public interest and need for the disclosure outweigh the potential injury to the patient, the physician-patient relationship and the treatment services.

(e) *Content of order.* An order authorizing a disclosure must:

(1) Limit disclosure to those parts of the patient's record which are essential to fulfill the objective of the order;

(2) Limit disclosure to those persons whose need for information is the basis for the order; and

(3) Include such other measures as are necessary to limit disclosure for the protection of the patient, the physician-patient relationship and the treatment services; for example, sealing from public scrutiny the record of any proceeding for which disclosure of a patient's record has been ordered.

§ 2.65 Procedures and criteria for orders authorizing disclosure and use of records to criminally investigate or prosecute patients.

(a) *Application.* An order authorizing the disclosure or use of patient records to criminally investigate or prosecute a patient may be applied for by the person holding the records or by any person conducting investigative or prosecutorial activities with respect to the enforcement of criminal laws. The application may be filed separately, as part of an application for a subpoena or other compulsory process, or in a pending criminal action. An application must use a fictitious name such as John Doe, to refer to any patient and may not contain or otherwise disclose patient identifying information unless the court has ordered the record of the proceeding sealed from public scrutiny.

(b) *Notice and hearing.* Unless an order under § 2.66 is sought with an order under this section, the person holding the records must be given:

(1) Adequate notice (in a manner which will not disclose patient identifying information to third parties) of an application by a person performing a law enforcement function;

(2) An opportunity to appear and be heard for the limited purpose of providing evidence on the statutory and regulatory criteria for the issuance of the court order; and

(3) An opportunity to be represented by counsel independent of counsel for an applicant who is a person performing a law enforcement function.

(c) *Review of evidence: Conduct of hearings.* Any oral argument, review of evidence, or hearing on the application shall be held in the judge's chambers or in some other manner which ensures that patient identifying information is not disclosed to anyone other than a party to the proceedings, the patient, or the person holding the records. The proceeding may include an examination by the judge of the patient records referred to in the application.

(d) *Criteria.* A court may authorize the disclosure and use of patient records for the purpose of conducting a criminal investigation or prosecution of a patient only if the court finds that all of the following criteria are met:

(1) The crime involved is extremely serious, such as one which causes or directly threatens loss of life or serious bodily injury including homicide, rape, kidnapping, armed robbery, assault with a deadly weapon, and child abuse and neglect.

(2) There is a reasonable likelihood that the records will disclose information of substantial value in the investigation or prosecution.

(3) Other ways of obtaining the information are not available or would not be effective.

(4) The potential injury to the patient, to the physician-patient relationship and to the ability of the program to provide services to other patients is outweighed by the public interest and the need for the disclosure.

(5) If the applicant is a person performing a law enforcement function that:

(i) The person holding the records has been afforded the opportunity to be

represented by independent counsel; and

(ii) Any person holding the records which is an entity within Federal, State, or local government has in fact been represented by counsel independent of the applicant.

(e) *Content of order.* Any order authorizing a disclosure or use of patient records under this section must:

(1) Limit disclosure and use to those parts of the patient's record which are essential to fulfill the objective of the order;

(2) Limit disclosure to those law enforcement and prosecutorial officials who are responsible for, or are conducting, the investigation or prosecution, and limit their use of the records to investigation and prosecution of extremely serious crime or suspected crime specified in the application; and

(3) Include such other measures as are necessary to limit disclosure and use to the fulfillment of only that public interest and need found by the court.

[52 FR 21809, June 9, 1987; 52 FR 42061, Nov. 2, 1987]

§2.66 Procedures and criteria for orders authorizing disclosure and use of records to investigate or prosecute a program or the person holding the records.

(a) *Application.* (1) An order authorizing the disclosure or use of patient records to criminally or administratively investigate or prosecute a program or the person holding the records (or employees or agents of that program or person) may be applied for by any administrative, regulatory, supervisory, investigative, law enforcement, or prosecutorial agency having jurisdiction over the program's or person's activities.

(2) The application may be filed separately or as part of a pending civil or criminal action against a program or the person holding the records (or agents or employees of the program or person) in which it appears that the patient records are needed to provide material evidence. The application must use a fictitious name, such as John Doe, to refer to any patient and may not contain or otherwise disclose any patient identifying information unless the court has ordered the record of the proceeding sealed from public scrutiny or the patient has given a written consent (meeting the requirements of §2.31 of these regulations) to that disclosure.

(b) *Notice not required.* An application under this section may, in the discretion of the court, be granted without notice. Although no express notice is required to the program, to the person holding the records, or to any patient whose records are to be disclosed, upon implementation of an order so granted any of the above persons must be afforded an opportunity to seek revocation or amendment of that order, limited to the presentation of evidence on the statutory and regulatory criteria for the issuance of the court order.

(c) *Requirements for order.* An order under this section must be entered in accordance with, and comply with the requirements of, paragraphs (d) and (e) of §2.64 of these regulations.

(d) *Limitations on disclosure and use of patient identifying information:* (1) An order entered under this section must require the deletion of patient identifying information from any documents made available to the public.

(2) No information obtained under this section may be used to conduct any investigation or prosecution of a patient, or be used as the basis for an application for an order under §2.65 of these regulations.

§2.67 Orders authorizing the use of undercover agents and informants to criminally investigate employees or agents of a program.

(a) *Application.* A court order authorizing the placement of an undercover agent or informant in a program as an employee or patient may be applied for by any law enforcement or prosecutorial agency which has reason to believe that employees or agents of the program are engaged in criminal misconduct.

(b) *Notice.* The program director must be given adequate notice of the application and an opportunity to appear and be heard (for the limited purpose of providing evidence on the statutory and regulatory criteria for the issuance of the court order), unless the application asserts a belief that:

(1) The program director is involved in the criminal activities to be investigated by the undercover agent or informant; or

(2) The program director will intentionally or unintentionally disclose the proposed placement of an undercover agent or informant to the employees or agents who are suspected of criminal activities.

(c) *Criteria.* An order under this section may be entered only if the court determines that good cause exists. To make this determination the court must find:

(1) There is reason to believe that an employee or agent of the program is engaged in criminal activity;

(2) Other ways of obtaining evidence of this criminal activity are not available or would not be effective; and

(3) The public interest and need for the placement of an undercover agent or informant in the program outweigh the potential injury to patients of the program, physician-patient relationships and the treatment services.

(d) *Content of order.* An order authorizing the placement of an undercover agent or informant in a program must:

(1) Specifically authorize the placement of an undercover agent or an informant;

(2) Limit the total period of the placement to six months;

(3) Prohibit the undercover agent or informant from disclosing any patient identifying information obtained from the placement except as necessary to criminally investigate or prosecute employees or agents of the program; and

(4) Include any other measures which are appropriate to limit any potential disruption of the program by the placement and any potential for a real or apparent breach of patient confidentiality; for example, sealing from public scrutiny the record of any proceeding for which disclosure of a patient's record has been ordered.

(e) *Limitation on use of information.* No information obtained by an undercover agent or informant placed under this section may be used to criminally investigate or prosecute any patient or as the basis for an application for an order under § 2.65 of these regulations.

PART 2a—PROTECTION OF IDENTITY—RESEARCH SUBJECTS

Sec.
2a.1 Applicability.
2a.2 Definitions.
2a.3 Application; coordination.
2a.4 Contents of application; in general.
2a.5 Contents of application; research projects in which drugs will be administered.
2a.6 Issuance of Confidentiality Certificates; single project limitation.
2a.7 Effect of Confidentiality Certificate.
2a.8 Termination.

AUTHORITY: Sec. 3(a), Pub. L. 91–513 as amended by sec. 122(b), Pub. L. 93–282; 84 Stat. 1241 (42 U.S.C. 242a(a)), as amended by 88 Stat. 132.

SOURCE: 44 FR 20384, Apr. 4, 1979, unless otherwise noted.

§ 2a.1 Applicability.

(a) Section 303(a) of the Public Health Service Act (42 U.S.C. 242a(a)) provides that ''[t]he Secretary [of Health and Human Services] may authorize persons engaged in research on mental health, including research on the use and effect of alcohol and other psychoactive drugs, to protect the privacy of individuals who are the subject of such research by withholding from all persons not connected with the conduct of such research the names or other identifying characteristics of such individuals. Persons so authorized to protect the privacy of such individuals may not be compelled in any Federal, State, or local civil, criminal, administrative, legislative, or other proceedings to identify such individuals.'' The regulations in this part establish procedures under which any person engaged in research on mental health including research on the use and effect of alcohol and other psychoactive drugs (whether or not the research is federally funded) may, subject to the exceptions set forth in paragraph (b) of this section, apply for such an authorization of confidentiality.

(b) These regulations do not apply to:

(1) Authorizations of confidentiality for research requiring an Investigational New Drug exemption under section 505(i) of the Federal Food, Drug, and Cosmetic Act (21 U.S.C. 355(i)) or to approved new drugs, such as methadone, requiring continuation of long-

term studies, records, and reports. Attention is called to 21 CFR 291.505(g) relating to authorizations of confidentiality for patient records maintained by methadone treatment programs.

(2) Authorizations of confidentiality for research which are related to law enforcement activities or otherwise within the purview of the Attorney General's authority to issue authorizations of confidentiality pursuant to section 502(c) of the Controlled Substances Act (21 U.S.C. 872(c)) and 21 CFR 1316.21.

(c) The Secretary's regulations on confidentiality of alcohol and drug abuse patient records (42 CFR part 2) and the regulations of this part may, in some instances, concurrently cover the same transaction. As explained in 42 CFR 2.24 and 2.24–1, 42 CFR part 2 restricts voluntary disclosures of information from applicable patient records while a Confidentiality Certificate issued pursuant to the regulations of this part protects a person engaged in applicable research from being compelled to disclose identifying characteristics of individuals who are the subject of such research.

§2a.2 Definitions.

(a) *Secretary* means the Secretary of Health and Human Services and any other officer or employee of the Department of Health and Human Services to whom the authority involved has been delegated.

(b) *Person* means any individual, corporation, government, or governmental subdivision or agency, business trust, partnership, association, or other legal entity.

(c) *Research* means systematic study directed toward new or fuller knowledge and understanding of the subject studied. The term includes, but is not limited to, behavioral science studies, surveys, evaluations, and clinical investigations.

(d) *Drug* has the meaning given that term by section 201(g)(1) of the Federal Food, Drug, and Cosmetic Act (21 U.S.C. 321(g)(1)).

(e) *Controlled drug* means a drug which is included in schedule I, II, III, IV, or V of part B of the Controlled Substances Act (21 U.S.C. 811–812).

(f) *Administer* refers to the direct application of a drug to the body of a human research subject, whether such application be by injection, inhalation, ingestion, or any other means, by (1) a qualified person engaged in research (or, in his or her presence, by his or her authorized agent), or (2) a research subject in accordance with instructions of a qualified person engaged in research, whether or not in the presence of a qualified person engaged in research.

(g) *Identifying characteristics* refers to the name, address, any identifying number, fingerprints, voiceprints, photographs or any other item or combination of data about a research subject which could reasonably lead directly or indirectly by reference to other information to identification of that research subject.

(h) *Psychoactive drug* means, in addition to alcohol, any drug which has as its principal action an effect on thought, mood, or behavior.

§2a.3 Application; coordination.

(a) Any person engaged in (or who intends to engage in) the research to which this part applies, who desires authorization to withhold the names and other identifying characteristics of individuals who are the subject of such research from any person or authority not connected with the conduct of such research may apply to the Office of the Director, National Institute on Drug Abuse, the Office of the Director, National Institute of Mental Health, or the Office of the Director, National Institute on Alcohol Abuse and Alcoholism, 5600 Fishers Lane, Rockville, Maryland 20857 for an authorization of confidentiality.

(b) If there is uncertainty with regard to which Institute is appropriate or if the research project falls within the purview of more than one Institute, an application need be submitted only to one Institute. Persons who are uncertain with regard to the applicability of these regulations to a particular type of research may apply for an authorization of confidentiality under the regulations of this part to one of the Institutes. Requests which are within the scope of the authorities described

in § 2a.1(b) will be forwarded to the appropriate agency for consideration and the person will be advised accordingly.

(c) An application may accompany, precede, or follow the sumission of a request for DHHS grant or contract assistance, though it is not necessary to request DHHS grant or contract assistance in order to apply for a Confidentiality Certificate. If a person has previously submitted any information required in this part in connection with a DHHS grant or contract, he or she may substitute a copy of information thus submitted, if the information is current and accurate. If a person requests a Confidentiality Certificate at the same time he or she submits an application for DHHS grant or contract assistance, the application for a Confidentiality Certificate may refer to the pertinent section(s) of the DHHS grant or contract application which provide(s) the information required to be submitted under this part. (See §§ 2a.4 and 2a.5.)

(d) A separate application is required for each research project for which an authorization of confidentiality is requested.

§ 2a.4 Contents of application; in general.

In addition to any other pertinent information which the Secretary may require, each application for an authorization of confidentiality for a research project shall contain:

(a) The name and address of the individual primarily responsible for the conduct of the research and the sponsor or institution with which he or she is affiliated, if any. Any application from a person affiliated with an institution will be considered only if it contains or is accompanied by documentation of institutional approval. This documentation may consist of a written statement signed by a responsible official of the institution or of a copy of or reference to a valid certification submitted in accordance with 45 CFR part 46.

(b) The location of the research project and a description of the facilities available for conducting the research, including the name and address of any hospital, institution, or clinical laboratory facility to be utilized in connection with the research.

(c) The names, addresses, and summaries of the scientific or other appropriate training and experience of all personnel having major responsibilities in the research project and the training and experience requirements for major positions not yet filled.

(d) An outline of the research protocol for the project including a clear and concise statement of the purpose and rationale of the research project and the general research methods to be used.

(e) The date on which research will begin or has begun and the estimated date for completion of the project.

(f) A specific request, signed by the individual primarily responsible for the conduct of the research, for authority to withhold the names and other identifying characteristics of the research subjects and the reasons supporting such request.

(g) An assurance (1) From persons making application for a Confidentiality Certificate for a research project for which DHHS grant or contract support is received or sought that they will comply with all the requirements of 45 CFR part 46, ''Protection of Human Subjects,'' or

(2) From all other persons making application that they will comply with the informed consent requirements of 45 CFR 46.103(c) and document legally effective informed consent in a manner consistent with the principles stated in 45 CFR 46.110, if it is determined by the Secretary, on the basis of information submitted by the person making application, that subjects will be placed at risk. If a modification of paragraphs (a) or (b) of 45 CFR 46.110 is to be used, as permitted under paragraph (c) of that section, the applicant will describe the proposed modification and submit it for approval by the Secretary.

(h) An assurance that if an authorization of confidentiality is given it will not be represented as an endorsement of the research project by the Secretary or used to coerce individuals to participate in the research project.

(i) An assurance that any person who is authorized by the Secretary to protect the privacy of research subjects

will use that authority to refuse to disclose identifying characteristics of research subjects in any Federal, State, or local civil, criminal, administrative, legislative, or other proceedings to compel disclosure of the identifying characteristics of research subjects.

(j) An assurance that all research subjects who participate in the project during the period the Confidentiality Certificate is in effect will be informed that:

(1) A Confidentiality Certificate has been issued;

(2) The persons authorized by the Confidentiality Certificate to protect the identity of research subjects may not be compelled to identify research subjects in any civil, criminal, administrative, legislative, or other proceedings whether Federal, State, or local;

(3) If any of the following conditions exist the Confidentiality Certificate does not authorize any person to which it applies to refuse to reveal identifying information concerning research subjects:

(i) The subject consents in writing to disclosure of identifying information,

(ii) Release is required by the Federal Food, Drug, and Cosmetic Act (21 U.S.C. 301) or regulations promulgated thereunder (title 21, Code of Federal Regulations), or

(iii) Authorized personnel of DHHS request identifying information for audit or program evaluation of a research project funded by DHHS or for investigation of DHHS grantees or contractors and their employees or agents carrying out such a project. (See §2a.7(b));

(4) The Confidentiality Certificate does not govern the voluntary disclosure of identifying characteristics of research subjects;

(5) The Confidentiality Certificate does not represent an endorsement of the research project by the Secretary.

(k) An assurance that all research subjects who enter the project after the termination of the Confidentiality Certificate will be informed that the authorization of confidentiality has ended and that the persons authorized to protect the identity of research subjects by the Confidentiality Certificate may not rely on the Certificate to refuse to disclose identifying characteristics of research subjects who were not participants in the project during the period the Certificate was in effect. (See §2a.8(c)).

§2a.5 Contents of application; research projects in which drugs will be administered.

(a) In addition to the information required by §2a.4 and any other pertinent information which the Secretary may require, each application for an authorization of confidentiality for a research project which involves the administering of a drug shall contain:

(1) Identification of the drugs to be administered in the research project and a description of the methods for such administration, which shall include a statement of the dosages to be administered to the research subjects;

(2) Evidence that individuals who administer drugs are authorized to do so under applicable Federal and State law; and

(3) In the case of a controlled drug, a copy of the Drug Enforcement Administration Certificate of Registration (BND Form 223) under which the research project will be conducted.

(b) An application for an authorization of confidentiality with respect to a research project which involves the administering of a controlled drug may include a request for exemption of persons engaged in the research from State or Federal prosecution for possession, distribution, and dispensing of controlled drugs as authorized under section 502(d) of the Controlled Substances Act (21 U.S.C. 872(d)) and 21 CFR 1316.22. If the request is in such form, and is supported by such information, as is required by 21 CFR 1316.22, the Secretary will forward it, together with his or her recommendation that such request be approved or disapproved, for the consideration of the Administrator of the Drug Enforcement Administration.

§2a.6 Issuance of Confidentiality Certificates; single project limitation.

(a) In reviewing the information provided in the application for a Confidentiality Certificate, the Secretary will take into account:

(1) The scientific or other appropriate training and experience of all personnel having major responsibilities in the research project;

(2) Whether the project constitutes bona fide ''research'' which is within the scope of the regulations of this part; and

(3) Such other factors as he or she may consider necessary and appropriate. All applications for Confidentiality Certificates shall be evaluated by the Secretary through such officers and employees of the Department and such experts or consultants engaged for this purpose as he or she determines to be appropriate.

(b) After consideration and evaluation of an application for an authorization of confidentiality, the Secretary will either issue a Confidentiality Certificate or a letter denying a Confidentiality Certificate, which will set forth the reasons for such denial, or will request additional information from the person making application. The Confidentiality Certificate will include:

(1) The name and address of the person making application;

(2) The name and address of the individual primarily responsible for conducting the research, if such individual is not the person making application;

(3) The location of the research project;

(4) A brief description of the research project;

(5) A statement that the Certificate does not represent an endorsement of the research project by the Secretary;

(6) The Drug Enforcement Administration registration number for the project, if any; and

(7) The date or event upon which the Confidentiality Certificate becomes effective, which shall not be before the later of either the commencement of the research project or the date of issuance of the Certificate, and the date or event upon which the Certificate will expire.

(c) A Confidentiality Certificate is not transferable and is effective only with respect to the names and other identifying characteristics of those individuals who are the subjects of the single research project specified in the Confidentiality Certificate. The recipient of a Confidentiality Certificate shall, within 15 days of any completion or discontinuance of the research project which occurs prior to the expiration date set forth in the Certificate, provide written notification to the Director of the Institute to which application was made. If the recipient determines that the research project will not be completed by the expiration date set forth in the Confidentiality Certificate he or she may submit a written request for an extension of the expiration date which shall include a justification for such extension and a revised estimate of the date for completion of the project. Upon approval of such a request, the Secretary will issue an amended Confidentiality Certificate.

(d) The protection afforded by a Confidentiality Certificate does not extend to significant changes in the research project as it is described in the application for such Certificate (e.g., changes in the personnel having major responsibilities in the research project, major changes in the scope or direction of the research protocol, or changes in the drugs to be administered and the persons who will administer them). The recipient of a Confidentiality Certificate shall notify the Director of the Institute to which application was made of any proposal for such a significant change by submitting an amended application for a Confidentiality Certificate in the same form and manner as an original application. On the basis of such application and other pertinent information the Secretary will either:

(1) Approve the amended application and issue an amended Confidentiality Certificate together with a Notice of Cancellation terminating original the Confidentiality Certificate in accordance with § 2a.8; or

(2) Disapprove the amended application and notify the applicant in writing that adoption of the proposed significant changes will result in the issuance of a Notice of Cancellation terminating the original Confidentiality Certificate in accordance with § 2a.8.

§ 2a.7 Effect of Confidentiality Certificate.

(a) A Confidentiality Certificate authorizes the withholding of the names and other identifying characteristics of

individuals who participate as subjects in the research project specified in the Certificate while the Certificate is in effect. The authorization applies to all persons who, in the performance of their duties in connection with the research project, have access to information which would identify the subjects of the research. Persons so authorized may not, at any time, be compelled in any Federal, State, or local civil, criminal, administrative, legislative, or other proceedings to identify the research subjects encompassed by the Certificate, except in those circumstances specified in paragraph (b) of this section.

(b) A Confidentiality Certificate granted under this part does not authorize any person to refuse to reveal the name or other identifying characteristics of any research subject in the following circumstances:

(1) The subject (or, if he or she is legally incompetent, his or her guardian) consents, in writing, to the disclosure of such information,

(2) Authorized personnel of DHHS request such information for audit or program evaluation of a research project funded by DHHS or for investigation of DHHS grantees or contractors and their employees or agents carrying out such a project. (See 45 CFR 5.71 for confidentiality standards imposed on such DHHS personnel), or

(3) Release of such information is required by the Federal Food, Drug, and Cosmetic Act (21 U.S.C. 301) or the regulations promulgated thereunder (title 21, Code of Federal Regulations).

(c) Neither a Confidentiality Certificate nor the regulations of this part govern the voluntary disclosure of identifying characteristics of research subjects.

§2a.8 Termination.

(a) A Confidentiality Certificate is in effect from the date of its issuance until the effective date of its termination. The effective date of termination shall be the earlier of:

(1) The expiration date set forth in the Confidentiality Certificate; or

(2) Ten days from the date of mailing a Notice of Cancellation to the applicant, pursuant to a determination by the Secretary that the research project has been completed or discontinued or that retention of the Confidentiality Certificate is otherwise no longer necessary or desirable.

(b) A Notice of Cancellation shall include: an identification of the Confidentiality Certificate to which it applies; the effective date of its termination; and the grounds for cancellation. Upon receipt of a Notice of Cancellation the applicant shall return the Confidentiality Certificate to the Secretary.

(c) Any termination of a Confidentiality Certificate pursuant to this section is operative only with respect to the names and other identifying characteristics of individuals who begin their participation as research subjects after the effective date of such termination. (See §2a.4(k) requiring researchers to notify subjects who enter the project after the termination of the Confidentiality Certificate of termination of the Certificate). The protection afforded by a Confidentiality Certificate is permanent with respect to subjects who participated in research during any time the authorization was in effect.

PART 3 [RESERVED]

PART 4—NATIONAL LIBRARY OF MEDICINE

Sec.
4.1 Programs to which these regulations apply.
4.2 Definitions.
4.3 Purpose of the Library.
4.4 Use of Library facilities.
4.5 Use of materials from the collections.
4.6 Reference, bibliographic, reproduction, and consultation services.
4.7 Fees.
4.8 Publication of the Library and information about the Library.

AUTHORITY: 42 U.S.C. 216, 286.

SOURCE: 56 FR 29188, June 26, 1991, unless otherwise noted.

§4.1 Programs to which these regulations apply.

(a) The regulations of this part govern access to the National Library of Medicine's facilities and library collections and the availability of its bibliographic, reproduction, reference, and

related services. These functions are performed by the Library directly for the benefit of the general public and health-sciences professionals as required by sections 465(b) (3)–(6) of the Act (42 U.S.C. 286(b) (3)–(6)).

(b) The regulations of this part do not apply to:

(1) The Library's internal functions relating to the acquisition and preservation of materials and the organization of these materials as required by sections 465(b) (1) and (2) of the Act (42 U.S.C. 286(b) (1) and (2)).

(2) The availability of ''records'' under the Freedom of Information Act or the Privacy Act of 1974 (5 U.S.C. 552, 552a). These matters are covered in 45 CFR parts 5 and 5b.

(3) Federal assistance for medical libraries and other purposes which are authorized by sections 469–477 of the Act (42 U.S.C. 286b to 286b–8). (See parts 59a, 61 and 64 of this chapter.)

(4) The availability of facilities, collections, and related services of Regional Medical Libraries established or maintained under the authority in section 475 of the Act (42 U.S.C. 286b–6). (See part 59a, subpart B of this chapter.)

§ 4.2 Definitions.

As used in this part:

Act means the Public Health Service Act, as amended (42 U.S.C. 201 *et seq.*).

Collections means all books, periodicals, prints, audiovisual materials, films, videotapes, recordings, manuscripts, and other resource materials of the library. It does not include data processing tapes or programs used solely for internal processing activities to generate reference materials, nor does it include ''records'' of the Library as defined in 45 CFR 5.5. Records of the Library are available in accordance with the regulations under the Freedom of Information Act and Privacy Act of 1974. (See 45 CFR parts 5 and 5b.)

Director means the Director of the National Library of Medicine or the Director's delegate.

Health-sciences professional means any person engaged in: (1) The administration of health activities; (2) the provision of health services; or (3) research, teaching, or education concerned with the advancement of medicine or other sciences related to health or improvement of the public health.

Historical collection means: (1) Materials in the collections published or printed prior to 1914; (2) manuscripts and prints; (3) the archival film collection; and (4) other materials of the collections which, because of age, or unique or unusual value, require special handling, storage, or protection for their preservation, as determined by the Director.

Library means the National Library of Medicine, established by section 465 of the Act (42 U.S.C. 286).

Regional Medical Library means a medical library established or maintained as a regional medical library under section 475 of the Act (42 U.S.C. 286b–6).

§ 4.3 Purpose of the Library.

The purpose of the Library is to assist the advancement of medical and related sciences and aid the dissemination and exchange of scientific and other information important to the progress of medicine and the public health. The Library acquires and maintains library materials pertinent to medicine, including audiovisual materials; compiles, publishes, and disseminates catalogs, indices, and bibliographies of these materials, as appropriate; makes available materials, through loan or otherwise; provides reference and other assistance to research; and engages in other activities in furtherance of this purpose.

§ 4.4 Use of Library facilities.

(a) *General.* The Library facilities are available to any person seeking to make use of the collections. The Director may prescribe reasonable rules to assure the most effective use of facilities by health-sciences professionals and to protect the collections from misuse or damage. These rules must be consistent with the regulations in this part and applicable Department regulations and policies on nondiscrimination.

(b) *Reading rooms.* Public reading rooms are available for obtaining and reading materials from the collections. The Director may prescribe reasonable rules designed to provide adequate

reading space and orderly conditions and procedures.

(c) *Study rooms.* Upon request a limited number of study rooms may be made available to individuals requiring extensive use of Library materials. Requests for study rooms shall be addressed in writing to the Director. The Director shall give priority, in the following order, for study room use to:

(1) Persons engaged in ''special scientific projects'' under section 473 of the Act (42 U.S.C. 286b–4),

(2) Health-sciences professionals, and

(3) The general public.

§4.5 Use of materials from the collections.

(a) *Unrestricted materials.* Except as otherwise provided in this section, materials from the collections are generally available to any interested person only in facilities provided by the Library for this purpose. The Director may prescribe additional reasonable rules to assure the most effective use of the Library's resources by health-sciences professionals and to protect the collections from misuse or damage. The rules must be consistent with the regulations in this part and applicable Department regulations and policies on nondiscrimination. Materials in the collections are available upon each request which assures, to the Director's satisfaction, that the materials will be safeguarded from misuse, damage, loss, or misappropriation, and will be returned promptly after use or upon request of the Library.

(b) *Restricted materials*—(1) *Historical collection.* Materials from the historical collection are available only as the Director may permit to assure their maximum preservation and protection. Copies of these materials may be made available in the form of microfilm and other copies, for which reasonable fees may be charged.

(2) *Gifts.* Materials in the collections are available only in accordance with any limitations imposed as a condition of the acquisition of those materials, whether the acquisition was by gift or purchase.

(c) *Loans*—(1) *General.* Requests for loans of materials must assure the Library that (i) the materials will be safeguarded from misuse, damage, loss, or misappropriation and (ii) the materials will be returned promptly after use or upon request of the Library. The Library may provide copies in lieu of original materials, which need not be returned unless otherwise stated at the time of the loan.

(2) *Loans of audiovisual materials.* Audiovisual materials are available for loan under the same general terms as printed materials.

(3) *Loans to other libraries.* Upon request materials or copies are available for use through libraries of public or private agencies or institutions. The requesting library must assure that it has first exhausted its own collection resources, those of other local libraries in the geographic area, and those of the Regional Medical Library network (including Regional and Resource Libraries) before making a request for a loan.

(4) *Loans to health-sciences professionals.* The Director may make loans of materials directly to health-sciences professionals. An individual wishing a loan of library materials must assure to the satisfaction of the Director that the individual is geographically isolated, in terms of distance or available transportation, from medical literature resources likely to contain the desired material.

(Approved by the Office of Management and Budget under control number 0925–0276)

§4.6 Reference, bibliographic, reproduction, and consultation services.

(a) *General.* To the extent resources permit, the Library will make available, upon request, reference, bibliographic, reproduction, and consultation services. Priority will be given to requests from health-sciences professionals for services not reasonably available through local or regional libraries.

(b) *Specialized bibliographic services.* The Director may provide bibliographies on individually selected medical or scientific topics upon request where it is consistent with the Library's purpose. The Director may publish and make available for general distribution by the Library, bibliographic searches determined to be of general interest. The Library may also produce

and distribute a limited number of bibliographies on topics of general interest to public or nonprofit health-related professional societies, research organizations, and other group users. These bibliographies may be produced on a regularly recurring or intermittent basis under contract between the Library and public or nonprofit agencies, when determined in each case by the Director to be necessary to assure more effective distribution of the bibliographic information.

(c) *Information retrieval system computer tapes.* To the extent Library resources permit and in order to further the Library's purpose, the Director may make available upon request by agencies, organizations, and institutions copies of all or part of the Library's magnetic tapes.

§ 4.7 Fees.

The Director may charge reasonable fees for any service provided by the Library under this part, in accordance with a schedule available at the Library upon request, which are designed to recover all or a portion of the cost to the Library of providing the service.

§ 4.8 Publication of the Library and information about the Library.

Lists of bibliographies, Library publications sold by the Government Printing Office, necessary application forms, and other information concerning the organization, operation, functions, and services of the Library, are available from the National Library of Medicine, Bethesda, Maryland 20894.

PART 5—DESIGNATION OF HEALTH PROFESSIONAL(S) SHORTAGE AREAS

Sec.

5.1 Purpose.
5.2 Definitions.
5.3 Procedures for designation of health professional(s) shortage areas.
5.4 Notification and publication of designations and withdrawals.
APPENDIX A TO PART 5—CRITERIA FOR DESIGNATION OF AREAS HAVING SHORTAGES OF PRIMARY MEDICAL CARE PROFESSIONAL(S)
APPENDIX B TO PART 5—CRITERIA FOR DESIGNATION OF AREAS HAVING SHORTAGES OF DENTAL PROFESSIONAL(S)
APPENDIX C TO PART 5—CRITERIA FOR DESIGNATION OF AREAS HAVING SHORTAGES OF MENTAL HEALTH PROFESSIONALS
APPENDIX D TO PART 5—CRITERIA FOR DESIGNATION OF AREAS HAVING SHORTAGES OF VISION CARE PROFESSIONAL(S)
APPENDIX E TO PART 5—CRITERIA FOR DESIGNATION OF AREAS HAVING SHORTAGES OF PODIATRIC PROFESSIONAL(S)
APPENDIX F TO PART 5—CRITERIA FOR DESIGNATION OF AREAS HAVING SHORTAGES OF PHARMACY PROFESSIONAL(S)
APPENDIX G TO PART 5—CRITERIA FOR DESIGNATION OF AREAS HAVING SHORTAGES OF VETERINARY PROFESSIONAL(S)

AUTHORITY: Sec. 215 of the Public Health Service Act, 58 Stat. 690 (42 U.S.C. 216); sec. 332 of the Public Health Service Act, 90 Stat. 2270–2272 (42 U.S.C. 254e).

SOURCE: 45 FR 76000, Nov. 17, 1980, unless otherwise noted.

EDITORIAL NOTE: Nomenclature changes to part 5 appear at 57 FR 2480, Jan. 22, 1992.

§ 5.1 Purpose.

These regulations establish criteria and procedures for the designation of geographic areas, population groups, medical facilities, and other public facilities, in the States, as health professional(s) shortage areas.

§ 5.2 Definitions.

Act means the Public Health Service Act, as amended.

Health professional(s) shortage area means any of the following which the Secretary determines has a shortage of health professional(s): (1) An urban or rural area (which need not conform to the geographic boundaries of a political subdivision and which is a rational area for the delivery of health services); (2) a population group; or (3) a public or nonprofit private medical facility.

Health service area means a health service area whose boundaries have been designated by the Secretary, under section 1511 of the Act, for purposes of health planning activities.

Health systems agency or *HSA* means the health systems agency designated, under section 1515 of the Act, to carry out health planning activities for a specific health service area.

Medical facility means a facility for the delivery of health services and includes: (1) A community health center,

public health center, outpatient medical facility, or community mental health center; (2) a hospital, State mental hospital, facility for long-term care, or rehabilitation facility; (3) a migrant health center or an Indian Health service facility; (4) a facility for delivery of health services to inmates in a U.S. penal or correctional institution (under section 323 of the Act) or a State correctional institution; (5) a Public Health Service medical facility (used in connection with the delivery of health services under section 320, 321, 322, 324, 325, or 326 of the Act); or (6) any other Federal medical facility.

Metropolitan area means an area which has been designated by the Office of Management and Budget as a standard metropolitan statistical area (SMSA). All other areas are ''non-metropolitan areas.''

Poverty level means the povery level as defined by the Bureau of the Census, using the poverty index adopted by a Federal Interagency Committee in 1969, and updated each year to reflect changes in the Consumer Price Index.

Secretary means the Secretary of Health and Human Services and any other officer or employee of the Department to whom the authority involved has been delegated.

State includes, in addition to the several States, the District of Columbia, the Commonwealth of Puerto Rico, the Northern Mariana Islands, the Virgin Islands, Guam, American Samoa, and the Trust Territory of the Pacific Islands.

State health planning and development agency or *SHPDA* means a State health planning and development agency designated under section 1521 of the Act.

§5.3 Procedures for designation of health professional(s) shortage areas.

(a) Using data available to the Department from national, State, and local sources and based upon the criteria in the appendices to this part, the Department will annually prepare listings (by State and health service area) of currently designated health professional(s) shortage areas and potentially designatable areas, together with appropriate related data available to the Department. Relevant portions of this material will then be forwarded to each health systems agency, State health planning and development agency, and Governor, who will be asked to review the listings for their State, correct any errors of which they are aware, and offer their recommendations, if any, within 90 days, as to which geographic areas, population groups, and facilities in areas under their jurisdiction should be designated. An information copy of these listings will also be made available, upon request, to interested parties for their use in providing comments or recommendations to the Secretary and/or to the appropriate HSA, SHPDA, or Governor.

(b) In addition, any agency or individual may request the Secretary to designate (or withdraw the designation of) a particular geographic area, population group, or facility as a health professional(s) shortage area. Each request will be forwarded by the Secretary to the appropriate HSA, SHPDA, and Governor, who will be asked to review it and offer their recommendations, if any, within 30 days. An information copy will also be made available to other interested parties, upon request, for their use in providing comments or recommendations to the Secretary and/or to the appropriate HSA, SHPDA, or Governor.

(c) In each case where the designation of a public facility (including a Federal medical facility) is under consideration, the Secretary will give written notice of the proposed designation to the chief administrative officer of the facility, who will be asked to review it and offer their recommendations, if any, within 30 days.

(d) After review of the available information and consideration of the comments and recommendations submitted, the Secretary will designate health professional(s) shortage areas and withdraw the designation of any areas which have been determined no longer to have a shortage of health professional(s).

§5.4 Notification and publication of designations and withdrawals.

(a) The Secretary will give written notice of the designation (or withdrawal of designation) of a health professional(s) shortage area, not later

than 60 days from the date of the designation (or withdrawal of designation), to:

(1) The Governor of each State in which the area, population group, medical facility, or other public facility so designated is in whole or in part located;

(2) Each HSA for a health service area which includes all or any part of the area, population group, medical facility, or other public facility so designated;

(3) The SHPDA for each State in which the area, population group, medical facility, or other public facility so designated is in whole or in part located; and

(4) Appropriate public or nonprofit private entities which are located in or which have a demonstrated interest in the area so designated.

(b) The Secretary will periodically publish updated lists of designated health professional(s) shortage areas in the FEDERAL REGISTER, by type of professional(s) shortage. An updated list of areas for each type of professional(s) shortage will be published at least once annually.

(c) The effective date of the designation of an area shall be the date of the notification letter to the individual or agency which requested the designation, or the date of publication in the FEDERAL REGISTER, whichever comes first.

(d) Once an area is listed in the FEDERAL REGISTER as a designated health professional(s) shortage area, the effective date of any later withdrawal of the area's designation shall be the date when notification of the withdrawal, or an updated list of designated areas which does not include it, is published in the FEDERAL REGISTER.

APPENDIX A TO PART 5—CRITERIA FOR DESIGNATION OF AREAS HAVING SHORTAGES OF PRIMARY MEDICAL CARE PROFESSIONAL(S)

Part I—Geographic Areas

A. *Federal and State Correctional Institutions.*

1. *Criteria.*

Medium to maximum security Federal and State correctional institutions and youth detention facilities will be designated as having a shortage of primary medical care professional(s) if both the following criteria are met:

(a) The institution has at least 250 inmates.

(b) The ratio of the number of internees per year to the number of FTE primary care physicians serving the institution is at least 1,000:1.

Here the number of internees is defined as follows:

(i) If the number of new inmates per year and the average length-of-stay are not specified, or if the information provided does not indicate that intake medical examinations are routinely performed upon entry, then—Number of internees=average number of inmates.

(ii) If the average length-of-stay is specified as one year or more, and intake medical examinations are routinely performed upon entry, then—Number of internees=average number of inmates+(0.3)×number of new inmates per year.

(iii) If the average length-of-stay is specified as less than one year, and intake examinations are routinely performed upon entry, then—Number of internees=average number of inmates+(0.2)×(1+ALOS/2)×number of new inmates per year where ALOS=average length-of-stay (in fraction of year). (The number of FTE primary care physicians is computed as in part I, section B, paragraph 3 above.)

2. Determination of Degree of Shortage.

Designated correctional institutions will be assigned to degree-of-shortage groups based on the number of inmates and/or the ratio (R) of internees to primary care physicians, as follows:

Group 1—Institutions with 500 or more inmates and no physicians.

Group 2—Other institutions with no physicians and institutions with R greater than (or equal to) 2,000:1.

Group 3—Institutions with R greater than (or equal to) 1,000:1 but less than 2,000:1.

B. *Methodology.*

In determining whether an area meets the criteria established by paragraph A of this part, the following methodology will be used:

1. *Rational Areas for the Delivery of Primary Medical Care Services.*

(a) The following areas will be considered rational areas for the delivery of primary medical care services:

(i) A county, or a group of contiguous counties whose population centers are within 30 minutes travel time of each other.

(ii) A portion of a county, or an area made up of portions of more than one county, whose population, because of topography, market or transportation patterns, distinctive population characteristics or other factors, has limited access to contiguous area resources, as measured generally by a travel time greater than 30 minutes to such resources.

(iii) Established neighborhoods and communities within metropolitan areas which display a strong self-identity (as indicated by a homogeneous socioeconomic or demographic structure and/or a tradition of interaction or interdependency), have limited interaction with contiguous areas, and which, in general, have a minimum population of 20,000.

(b) The following distances will be used as guidelines in determining distances corresponding to 30 minutes travel time:

(i) Under normal conditions with primary roads available: 20 miles.

(ii) In mountainous terrain or in areas with only secondary roads available: 15 miles.

(iii) In flat terrain or in areas connected by interstate highways: 25 miles.

Within inner portions of metropolitan areas, information on the public transportation system will be used to determine the distance corresponding to 30 minutes travel time.

2. *Population Count.*

The population count used will be the total permanent resident civilian population of the area, excluding inmates of institutions, with the following adjustments, where appropriate:

(a) Adjustments to the population for the differing health service requirements of various age-sex population groups will be computed using the table below of visit rates for 12 age-sex population cohorts. The total expected visit rate will first be obtained by multiplying each of the 12 visit rates in the table by the size of the area population within that particular age-sex cohort and adding the resultant 12 visit figures together. This total expected visit rate will then be divided by the U.S. average per capita visit rate of 5.1, to obtain the adjusted population for the area.

Sex	Age groups					
	Under 5	5–14	15–24	25–44	45–64	65 and over
Male	7.3	3.6	3.3	3.6	4.7	6.4
Female	6.4	3.2	5.5	6.4	6.5	6.8

(b) The effect of transient populations on the need of an area for primary care professional(s) will be taken into account as follows:

(i) Seasonal residents, i.e., those who maintain a residence in the area but inhabit it for only 2 to 8 months per year, may be included but must be weighted in proportion to the fraction of the year they are present in the area.

(ii) Other tourists (non-resident) may be included in an area's population but only with a weight of 0.25, using the following formula: Effective tourist contribution to population=0.25×(fraction of year tourists are present in area)×(average daily number of tourists during portion of year that tourists are present).

(iii) Migratory workers and their families may be included in an area's population, using the following formula: Effective migrant contribution to population=(fraction of year migrants are present in area)×(average daily number of migrants during portion of year that migrants are present).

3. *Counting of Primary Care Practitioners.*

(a) All non-Federal doctors of medicine (M.D.) and doctors of osteopathy (D.O.) providing direct patient care who practice principally in one of the four primary care specialities—general or family practice, general internal medicine, pediatrics, and obstetrics and gynecology—will be counted. Those physicians engaged solely in administration, research, and teaching will be excluded. Adjustments for the following factors will be made in computing the number of full-time-equivalent (FTE) primary care physicians:

(i) Interns and residents will be counted as 0.1 full-time equivalent (FTE) physicians.

(ii) Graduates of foreign medical schools who are not citizens or lawful permanent residents of the United States will be excluded from physician counts.

(iii) Those graduates of foreign medical schools who are citizens or lawful permanent residents of the United States, but do not have unrestricted licenses to practice medicine, will be counted as 0.5 FTE physicians.

(b) Practitioners who are semi-retired, who operate a reduced practice due to infirmity or other limiting conditions, or who provide patient care services to the residents of the area only on a part-time basis will be discounted through the use of full-time equivalency figures. A 40-hour work week will be used as the standard for determining full-time equivalents in these cases. For practitioners working less than a 40-hour week, every four (4) hours (or ½ day) spent providing patient care, in either ambulatory or inpatient settings, will be counted as 0.1 FTE (with numbers obtained for FTE's rounded to the nearest 0.1 FTE), and each physician providing patient care 40 or more hours a week will be counted as 1.0 FTE physician. (For cases where data are available only for the

number of hours providing patient care in office settings, equivalencies will be provided in guidelines.)

(c) In some cases, physicians located within an area may not be accessible to the population of the area under consideration. Allowances for physicians with restricted practices can be made, on a case-by-case basis. However, where only a portion of the population of the area cannot access existing primary care resources in the area, a population group designation may be more appropriate (see part II of this appendix).

(d) Hospital staff physicians involved exclusively in inpatient care will be excluded. The number of full-time equivalent physicians practicing in organized outpatient departments and primary care clinics will be included, but those in emergency rooms will be excluded.

(e) Physicians who are suspended under provisions of the Medicare-Medicaid Anti-Fraud and Abuse Act for a period of eighteen months or more will be excluded.

4. *Determination of Unusually High Needs for Primary Medical Care Services.*

An area will be considered as having unusually high needs for primary health care services if at least one of the following criteria is met:

(a) The area has more than 100 births per year per 1,000 women aged 15–44.

(b) The area has more than 20 infant deaths per 1,000 live births.

(c) More than 20% of the population (or of all households) have incomes below the poverty level.

5. *Determination of Insufficient Capacity of Existing Primary Care Providers.*

An area's existing primary care providers will be considered to have insufficient capacity if at least two of the following criteria are met:

(a) More than 8,000 office or outpatient visits per year per FTE primary care physician serving the area.

(b) Unusually long waits for appointments for routine medical services (i.e., more than 7 days for established patients and 14 days for new patients).

(c) Excessive average waiting time at primary care providers (longer than one hour where patients have appointments or two hours where patients are treated on a first-come, first-served basis).

(d) Evidence of excessive use of emergency room facilities for routine primary care.

(e) A substantial proportion (2/3 or more) of the area's physicians do not accept new patients.

(f) Abnormally low utilization of health services, as indicated by an average of 2.0 or less office visits per year on the part of the area's population.

6. *Contiguous Area Considerations.*

Primary care professional(s) in areas contiguous to an area being considered for designation will be considered excessively distant, overutilized or inaccessible to the population of the area under consideration if one of the following conditions prevails in each contiguous area:

(a) Primary care professional(s) in the contiguous area are more than 30 minutes travel time from the population center(s) of the area being considered for designation (measured in accordance with paragraph B.1(b) of this part).

(b) The contiguous area population-to-full-time-equivalent primary care physician ratio is in excess of 2000:1, indicating that practitioners in the contiguous area cannot be expected to help alleviate the shortage situation in the area being considered for designation.

(c) Primary care professional(s) in the contiguous area are inaccessible to the population of the area under consideration because of specified access barriers, such as:

(i) Significant differences between the demographic (or socio-economic) characteristics of the area under consideration and those of the contiguous area, indicating that the population of the area under consideration may be effectively isolated from nearby resources. This isolation could be indicated, for example, by an unusually high proportion of non-English-speaking persons.

(ii) A lack of economic access to contiguous area resources, as indicated particularly where a very high proportion of the population of the area under consideration is poor (i.e., where more than 20 percent of the population or the households have incomes below the poverty level), and Medicaid-covered or public primary care services are not available in the contiguous area.

C. *Determination of Degree of Shortage.*

Designated areas will be assigned to degree-of-shortage groups, based on the ratio (R) of population to number of full-time equivalent primary care physicians and the presence or absence of unusually high needs for primary health care services, according to the following table:

	High needs not indicated	High needs indicated
Group 1	No physicians	No physicians; or R≥5,000
Group 2	R≥5,000	5,000>R≥4,000
Group 3	5,000>R≥4,000	4,000>R≥3,500
Group 4	4,000>R≥3,500	3,500>R≥3,000

D. *Determination of size of primary care physician shortage.* Size of Shortage (in number of FTE primary care physicians needed) will be computed using the following formulas:

(1) For areas without unusually high need or insufficient capacity:

Primary care physician shortage=area population/3,500−number of FTE primary care physicians

(2) For areas with unusually high need or insufficient capacity:

Primary care physician shortage=area population/3,000−number of FTE primary care physicians

Part II—Population Groups

A. *Criteria.*

1. In general, specific population groups within particular geographic areas will be designated as having a shortage of primary medical care professional(s) if the following three criteria are met:

(a) The area in which they reside is rational for the delivery of primary medical care services, as defined in paragraph B.1 of part I of this appendix.

(b) Access barriers prevent the population group from use of the area's primary medical care providers. Such barriers may be economic, linguistic, cultural, or architectural, or could involve refusal of some providers to accept certain types of patients or to accept Medicaid reimbursement.

(c) The ratio of the number of persons in the population group to the number of primary care physicians practicing in the area and serving the population group is at least 3,000 : 1.

2. Indians and Alaska Natives will be considered for designation as having shortages of primary care professional(s) as follows:

(a) Groups of members of Indian tribes (as defined in section 4(d) of Pub. L. 94–437, the Indian Health Care Improvement Act of 1976) are automatically designated.

(b) Other groups of Indians or Alaska Natives (as defined in section 4(c) of Pub. L. 94–437) will be designated if the general criteria in paragraph A are met.

B. *Determination of Degree of Shortage.*

Each designated population group will be assigned to a degree-of-shortage group, based on the ratio (R) of the group's population to the number of primary care physicians serving it, as follows:

Group 1—No physicians or R>5,000.

Group 2—5,000>R≥4,000.

Group 3—4,000>R≥3,500.

Group 4—3,500>R≥3,000.

Population groups which have received ''automatic'' designation will be assigned to degree-of-shortage group 4 if no information on the ratio of the number of persons in the group to the number of FTE primary care physicians serving them is provided.

C. *Determination of size of primary care physician shortage.* Size of shortage (in number of primary care physicians needed) will be computed as follows:

Primary care physician shortage=number of persons in population group/3,000−number of FTE primary care physicians

Part III—Facilities

A. *Federal and State Correctional Institutions.*

1. *Criteria.*

Medium to maximum security Federal and State correctional institutions and youth detention facilities will be designated as having a shortage of primary medical care professional(s) if both the following criteria are met:

(a) The institution has at least 250 inmates.

(b) The ratio of the number of internees per year to the number of FTE primary care physicians serving the institution is at least 1,000:1. (Here the number of internees is the number of inmates present at the beginning of the year plus the number of new inmates entering the institution during the year, including those who left before the end of the year; the number of FTE primary care physicians is computed as in part I, section B, paragraph 3 above.)

2. *Determination of Degree of Shortage.*

Designated correctional institutions will be assigned to degree-of-shortage groups based on the number of inmates and/or the ratio (R) of internees to primary care physicians, as follows:

Group 1—Institutions with 500 or more inmates and no physicians.

Group 2—Other institutions with no physicians and institutions with R≥2,000.

Group 3—Institutions with 2,000>R≥1,000.

B. *Public or Non-Profit Medical Facilities.*

1. *Criteria.*

Public or non-profit private medical facilities will be designated as having a shortage of primary medical care professional(s) if:

(a) the facility is providing primary medical care services to an area or population group designated as having a primary care professional(s) shortage; and

(b) the facility has insufficient capacity to meet the primary care needs of that area or population group.

2. *Methodology*

In determining whether public or nonprofit private medical facilities meet the criteria established by paragraph B.1 of this Part, the following methodology will be used:

(a) *Provision of Services to a Designated Area or Population Group.*

A facility will be considered to be providing services to a designated area or population group if either:

(i) A majority of the facility's primary care services are being provided to residents of designated primary care professional(s) shortage areas or to population groups designated as having a shortage of primary care professional(s); or

(ii) The population within a designated primary care shortage area or population group

has reasonable access to primary care services provided at the facility. Reasonable access will be assumed if the area within which the population resides lies within 30 minutes travel time of the facility and non-physical barriers (relating to demographic and socioeconomic characteristics of the population) do not prevent the population from receiving care at the facility.

Migrant health centers (as defined in section 319(a)(1) of the Act) which are located in areas with designated migrant population groups and Indian Health Service facilities are assumed to be meeting this requirement.

(b) *Insufficient capacity to meet primary care needs.*

A facility will be considered to have insufficient capacity to meet the primary care needs of the area or population it serves if at least two of the following conditions exist at the facility:

(i) There are more than 8,000 outpatient visits per year per FTE primary care physician on the staff of the facility. (Here the number of FTE primary care physicians is computed as in Part I, Section B, paragraph 3 above.)

(ii) There is excessive usage of emergency room facilities for routine primary care.

(iii) Waiting time for appointments is more than 7 days for established patients or more than 14 days for new patients, for routine health services.

(iv) Waiting time at the facility is longer than 1 hour where patients have appointments or 2 hours where patients are treated on a first-come, first-served basis.

3. *Determination of Degree of Shortage.*

Each designated medical facility will be assigned to the same degree-of-shortage group as the designated area or population group which it serves.

[45 FR 76000, Nov. 17, 1980, as amended at 54 FR 8737, Mar. 2, 1989; 57 FR 2480, Jan. 22, 1992]

APPENDIX B TO PART 5—CRITERIA FOR DESIGNATION OF AREAS HAVING SHORTAGES OF DENTAL PROFESSIONAL(S)

Part I—Geographic Areas

A. *Federal and State Correctional Institutions.*

1. *Criteria*

Medium to maximum security Federal and State correctional institutions and youth detention facilities will be designated as having a shortage of dental professional(s) if both the following criteria are met:

(a) The institution has at least 250 inmates.

(b) The ratio of the number of internees per year to the number of FTE dentists serving the institution is at least 1,500:1.

Here the number of internees is defined as follows:

(i) If the number of new inmates per year and the average length-of-stay are not specified, or if the information provided does not indicate that intake dental examinations are routinely performed by dentists upon entry, then—Number of internees=average number of inmates.

(ii) If the average length-of-stay is specified as one year or more, and intake dental examinations are routinely performed upon entry, then—Number of internees=average number of inmates+number of new inmates per year.

(iii) If the average length-of-stay is specified as less than one year, and intake dental examinations are routinely performed upon entry, then—Number of internees=average number of inmates+⅓×(1+2×ALOS)×number of new inmates per year where ALOS=average length-of-stay (in fraction of year).

(The number of FTE dentists is computed as in part I, section B, paragraph 3 above.)

2. Determination of Degree of Shortage.

Designated correctional institutions will be assigned to degree-of-shortage groups based on the number of inmates and/or the ratio (R) of internees to dentists, as follows:

Group 1—Institutions with 500 or more inmates and no dentists.

Group 2—Other institutions with no dentists and institutions with R greater than (or equal to) 3,000:1.

Group 3—Institutions with R greater than (or equal to) 1,500:1 but less than 3,000:1.

B. *Methodology.*

In determining whether an area meets the criteria established by paragraph A of this part, the following methodology will be used:

1. *Rational Area for the Delivery of Dental Services.*

(a) The following areas will be considered rational areas for the delivery of dental health services:

(i) A county, or a group of several contiguous counties whose population centers are within 40 minutes travel time of each other.

(ii) A portion of a county (or an area made up of portions of more than one county) whose population, because of topography, market or transportation patterns, distinctive population characteristics, or other factors, has limited access to contiguous area resources, as measured generally by a travel time of greater than 40 minutes to such resources.

(iii) Established neighborhoods and communities within metropolitan areas which display a strong self-identity (as indicated by a homogenous socioeconomic or demographic structure and/or a traditional of interaction or intradependency), have limited interaction with contiguous areas, and which, in general, have a minimum population of 20,000.

(b) The following distances will be used as guidelines in determining distances corresponding to 40 minutes travel time:

(i) Under normal conditions with primary roads available: 25 miles.

(ii) In mountainous terrain or in areas with only secondary roads available: 20 miles.

(iii) In flat terrain or in areas connected by interstate highways: 30 miles.

Within inner portions of metropolitan areas, information on the public transportation system will be used to determine the distance corresponding to 40 minutes travel time.

2. *Population Count.*

The population count use will be the total permanent resident civilian population of the area, excluding inmates of institutions, with the following adjustments:

(a) Seasonal residents, i.e., those who maintain a residence in the area but inhabit it for only 2 to 8 months per year, may be included but must be weighted in proportion to the fraction of the year they are present in the area.

(b) Migratory workers and their families may be included in an area's population using the following formula: Effective migrant contribution to population=(fraction of year migrants are present in area)×(average daily number of migrants during portion of year that migrants are present).

3. *Counting of Dental Practitioners.*

(a) All non-Federal dentists providing patient care will be counted, except in those areas where it is shown that specialists (those dentists not in general practice or pedodontics) are serving a larger area and are not addressing the general dental care needs of the area under consideration.

(b) Full-time equivalent (FTE) figures will be used to reflect productivity differences among dental practices based on the age of the dentists, the number of auxiliaries employed, and the number of hours worked per week. In general, the number of FTE dentists will be computed using weights obtained from the matrix in Table 1, which is based on the productivity of dentists at various ages, with different numbers of auxiliaries, as compared with the average productivity of all dentists. For the purposes of these determinations, an auxiliary is defined as any non-dentist staff employed by the dentist to assist in operation of the practice.

TABLE 1—EQUIVALENCY WEIGHTS, BY AGE AND NUMBER OF AUXILIARIES

	<55	55–59	60–64	65+
No auxiliaries	0.8	0.7	0.6	0.5
One auxiliary	1.0	0.9	0.8	0.7
Two auxiliaries	1.2	1.0	1.0	0.8
Three auxiliaries	1.4	1.2	1.0	1.0

TABLE 1—EQUIVALENCY WEIGHTS, BY AGE AND NUMBER OF AUXILIARIES—Continued

	<55	55–59	60–64	65+
Four or more auxiliaries	1.5	1.5	1.3	1.2

If information on the number of auxiliaries employed by the dentist is not available, Table 2 will be used to compute the number of full-time equivalent dentists.

TABLE 2—EQUIVALENCY WEIGHTS, BY AGE

	55	55–59	60–64	65+
Equivalency weights	1.2	0.9	0.8	0.6

The number of FTE dentists within a particular age group (or age/auxiliary group) will be obtained by multiplying the number of dentists within that group by its corresponding equivalency weight. The total supply of FTE dentists within an area is then computed as the sum of those dentists within each age (or age/auxiliary) group.

(c) The equivalency weights specified in tables 1 and 2 assume that dentists within a particular group are working full-time (40 hours per week). Where appropriate data are available, adjusted equivalency figures for dentists who are semi-retired, who operate a reduced practice due to infirmity or other limiting conditions, or who are available to the population of an area only on a part-time basis will be used to reflect the reduced availability of these dentists. In computing these equivalency figures, every 4 hours (or ½ day) spent in the dental practice will be counted as 0.1 FTE except that each dentist working more than 40 hours a week will be counted as 1.0. The count obtained for a particular age group of dentists will then be multiplied by the appropriate equivalency weight from table 1 or 2 to obtain a full-time equivalent figure for dentists within that particular age or age/auxiliary category.

4. *Determination of Unusually High Needs for Dental Services.*

An area will be considered as having unusually high needs for dental services if at least one of the following criteria is met:

(a) More than 20% of the population (or of all households) has incomes below the poverty level.

(b) The majority of the area's population does not have a fluoridated water supply.

5. *Determination of Insufficient Capacity of Existing Dental Care Providers.*

An area's existing dental care providers will be considered to have insufficient capacity if at least two of the following criteria are met:

(a) More than 5,000 visits per year per FTE dentist serving the area.

(b) Unusually long waits for appointments for routine dental services (i.e., more than 6 weeks).

(c) A substantial proportion (⅔ or more) of the area's dentists do not accept new patients.

6. *Contiguous Area Considerations.*

Dental professional(s) in areas contiguous to an area being considered for designation will be considered excessively distant, overutilized or inaccessible to the population of the area under consideration if one of the following conditions prevails in each contiguous area:

(a) Dental professional(s) in the contiguous area are more than 40 minutes travel time from the center of the area being considered for designation (measured in accordance with Paragraph B.1.(b) of this part).

(b) Contiguous area population-to-(FTE) dentist ratios are in excess of 3,000:1, indicating that resources in contiguous areas cannot be expected to help alleviate the shortage situation in the area being considered for designation.

(c) Dental professional(s) in the contiguous area are inaccessible to the population of the area under consideration because of specified access barriers, such as:

(i) Significant differences between the demographic (or socioeconomic) characteristics of the area under consideration and those of the contiguous area, indicating that the population of the area under consideration may be effectively isolated from nearby resources. Such isolation could be indicated, for example, by an unusually high proportion of non-English-speaking persons.

(ii) A lack of economic access to contiguous area resources, particularly where a very high proportion of the population of the area under consideration is poor (i.e., where more than 20 percent of the population or of the households have incomes below the poverty level) and Medicaid-covered or public dental services are not available in the contiguous area.

C. *Determination of Degree of Shortage.*

The degree of shortage of a given geographic area, designated as having a shortage of dental professional(s), will be determined using the following procedure:

Designated areas will be assigned to degree-of-shortage groups, based on the ratio (R) of population to number of full-time-equivalent dentists and the presence or absence of unusually high needs for dental services, or insufficient capacity of existing dental care providers according to the following table:

	High needs or insufficient capacity not indicated	High needs or insufficient capacity indicated
Group 1	No dentists	No dentists or R≥8,000.
Group 2	R≥8,000	8,000>R≥6,000.
Group 3	8,000>R≥6,000	6,000>R≥5,000.
Group 4	6,000>R≥5,000	5,000>R≥4,000.

D. *Determination of size of dental shortage.* Size of Dental Shortage (in number of FTE dental practitioners needed) will be computed using the following formulas:

(1) For areas without unusually high need:

Dental shortage=area population/5,000−number of FTE dental practitioners

(2) For areas with unusually high need:

Dental shortage=area population/4,000−number of FTE dental practitioners

Part II—Population Groups

A. *Criteria.*

1. In general, specified population groups within particular geographic areas will be designated as having a shortage of dental care professional(s) if the following three criteria are met:

a. The area in which they reside is rational for the delivery of dental care services, as defined in paragraph B.1 of part I of this appendix.

b. Access barriers prevent the population group from use of the area's dental providers.

c. The ratio (R) of the number of persons in the population group to the number of dentists practicing in the area and serving the population group is at least 4,000:1.

2. Indians and Alaska Natives will be considered for designation as having shortages of dental professional(s) as follows:

(a) Groups of members of Indian tribes (as defined in section 4(d) of Pub. L. 94–437, the Indian Health Care Improvement Act of 1976) are automatically designated.

(b) Other groups of Indians or Alaska Natives (as defined in section 4(c) of Pub. L. 94–437) will be designated if the general criteria in paragraph 1 are met.

B. *Determination of Degree of Shortage.*

Each designated population group will be assigned to a degree-of-shortage group as follows:

Group 1—No dentists or R≥8,000.
Group 2—8,000>R≥6,000.
Group 3—6,000>R≥5,000.
Group 4—5,000>R≥4,000.

Population groups which have received ''automatic'' designation will be assigned to degree-of-shortage group 4 unless information on the ratio of the number of persons in the group to the number of FTE dentists serving them is provided.

C. *Determination of size of dental shortage.* Size of dental shortage will be computed as follows:

Dental shortage=number of persons in population group/4,000−number of FTE dental practitioners

Part III—Facilities

A. *Federal and State Correctional Institutions.*

1. *Criteria.*

Medium to maximum security Federal and State correctional institutions and youth detention facilities will be designated as having a shortage of dental professional(s) if both the following criteria are met:

(a) The institution has at least 250 inmates.

(b) The ratio of the number of internees per year to the number of FTE dentists serving the institution is at least 1,500:1. (Here the number of internees is the number of inmates present at the beginning of the year plus the number of new inmates entering the institution during the year, including those who left before the end of the year; the number of FTE dentists is computed as in part I, section B, paragraph 3 above.)

2. *Determination of Degree-of-Shortage.*

Designated correctional institutions will be assigned to degree-of-shortage groups as follows, based on number of inmates and/or the ratio (R) of internees to dentists:

Group 1—Institutions with 500 or more inmates and no dentists.

Group 2—Other institutions with no dentists and institutions with $R > 3,000$.

Group 3—Institutions with $3,000 > R > 1,500$.

B. *Public or Non-Profit Private Dental Facilities.*

1. *Criteria.*

Public or nonprofit private facilties providing general dental care services will be designated as having a shortage of dental professional(s) if both of the following criteria are met:

(a) The facility is providing general dental care services to an area or population group designated as having a dental professional(s) shortage; and

(b) The facility has insufficent capacity to meet the dental care needs of that area or population group.

2. *Methodology.*

In determining whether public or nonprofit private facilities meet the criteria established by paragraph B.1. of this part, the following methodology will be used:

(a) *Provision of Services to a Designated Area or Population Group.*

A facility will be considered to be providing services to an area or population group if either:

(i) A majority of the facility's dental care services are being provided to residents of designated dental professional(s) shortage areas or to population groups designated as having a shortage of dental professional(s); or

(ii) The population within a designated dental shortage area or population group has reasonable access to dental services provided at the facility. Reasonable access will be assumed if the population lies within 40 minutes travel time of the facility and non-physical barriers (relating to demographic and socioeconomic characteristics of the population) do not prevent the population from receiving care at the facility.

Migrant health centers (as defined in section 319(a)(1) of the Act) which are located in areas with designated migrant population groups and Indian Health Service facilities are assumed to be meeting this requirement.

(b) *Insufficient Capacity To Meet Dental Care Needs.*

A facility will be considered to have insufficient capacity to meet the dental care needs of a designated area or population group if either of the following conditions exists at the facility.

(i) There are more than 5,000 outpatient visits per year per FTE dentist on the staff of the facility. (Here the number of FTE dentists is computed as in part I, section B, paragraph 3 above.)

(ii) Waiting time for appointments is more than 6 weeks for routine dental services.

3. *Determination of Degree of Shortage.*

Each designated dental facility will be assigned to the same degree-of-shortage group as the designated area or population group which it serves.

[45 FR 76000, Nov. 17, 1980, as amended at 54 FR 8738, Mar. 2, 1989; 57 FR 2480, Jan. 22, 1992]

APPENDIX C TO PART 5—CRITERIA FOR DESIGNATION OF AREAS HAVING SHORTAGES OF MENTAL HEALTH PROFESSIONALS

Part I—Geographic Areas

A. *Criteria.* A geographic area will be designated as having a shortage of mental health professionals if the following four criteria are met:

1. The area is a rational area for the delivery of mental health services.

2. One of the following conditions prevails within the area:

(a) The area has—

(i) A population-to-core-mental-health-professional ratio greater than or equal to 6,000:1 and a population-to-psychiatrist ratio greater than or equal to 20,000:1, or

(ii) A population-to-core-professional ratio greater than or equal to 9,000:1, or

(iii) A population-to-psychiatrist ratio greater than or equal to 30,000:1;

(b) The area has unusually high needs for mental health services, and has—

(i) A population-to-core-mental-health-professional ratio greater than or equal to 4,500:1 and

A population-to-psychiatrist ratio greater than or equal to 15,000:1, or

(ii) A population-to-core-professional ratio greater than or equal to 6,000:1, or

(iii) A population-to-psychiatrist ratio greater than or equal to 20,000:1;

3. Mental health professionals in contiguous areas are overutilized, excessively distant or inaccessible to residents of the area under consideration.

B. *Methodology.*

In determining whether an area meets the criteria established by paragraph A of this part, the following methodology will be used:

1. *Rational Areas for the Delivery of Mental Health Services.*

(a) The following areas will be considered rational areas for the delivery of mental health services:

(i) An established mental health catchment area, as designated in the State Mental Health Plan under the general criteria set forth in section 238 of the Community Mental Health Centers Act.

(ii) A portion of an established mental health catchment area whose population, because of topography, market and/or transportation patterns or other factors, has limited access to mental health resources in the rest of the catchment area, as measured generally by a travel time of greater than 40 minutes to these resources.

(iii) A county or metropolitan area which contains more than one mental health catchment area, where data are unavailable by individual catchment area.

(b) The following distances will be used as guidelines in determining distances corresponding to 40 minutes travel time:

(i) Under normal conditions with primary roads available: 25 miles.

(ii) In mountainous terrain or in areas with only secondary roads available: 20 miles.

(iii) In flat terrain or in areas connected by interstate highways: 30 miles.

Within inner portions of metropolitan areas, information on the public transportation system will be used to determine the distance corresponding to 40 minutes travel time.

2. *Population Count.*

The population count used will be the total permanent resident civilian population of the area, excluding inmates of institutions.

3. *Counting of mental health professionals.* (a) All non-Federal core mental health professionals (as defined below) providing mental health patient care (direct or other, including consultation and supervision) in ambulatory or other short-term care settings to residents of the area will be counted. Data on each type of core professional should be presented separately, in terms of the number of full-time-equivalent (FTE) practitioners of each type represented.

(b) Definitions:

(i) *Core mental health professionals* or *core professionals* includes those psychiatrists, clinical psychologists, clinical social workers, psychiatric nurse specialists, and marriage and family therapists who meet the definitions below.

(ii) *Psychiatrist* means a doctor of medicine (M.D.) or doctor of osteopathy (D.O.) who

(A) Is certified as a psychiatrist or child psychiatrist by the American Medical Specialities Board of Psychiatry and Neurology or by the American Osteopathic Board of Neurology and Psychiatry, or, if not certified, is ''broad-eligible'' (i.e., has successfully completed an accredited program of graduate medical or osteopathic education in psychiatry or child psychiatry); and

(B) Practices patient care psychiatry or child psychiatry, and is licensed to do so, if required by the State of practice.

(iii) *Clinical psychologist* means an individual (normally with a doctorate in psychology) who is practicing as a clinical or counseling psychologist and is licensed or certified to do so by the State of practice; or, if licensure or certification is not required in the State of practice, an individual with a doctorate in psychology and two years of supervised clinical or counseling experience. (School psychologists are not included.)

(iv) *Clinical social worker* means an individual who—

(A) Is certified as a clinical social worker by the American Board of Examiners in Clinical Social Work, or is listed on the National Association of Social Workers' Clinical Register, or has a master's degree in social work and two years of supervised clinical experience; and

(B) Is licensed to practice as a social worker, if required by the State of practice.

(v) *Psychiatric nurse specialist* means a registered nurse (R.N.) who—

(A) Is certified by the American Nurses Association as a psychiatric and mental health clinical nurse specialist, or has a master's degree in nursing with a specialization in psychiatric/mental health and two years of supervised clinical experience; and

(B) Is licensed to practice as a psychiatric or mental health nurse specialist, if required by the State of practice.

(vi) *Marriage and family therapist* means an individual (normally with a master's or doctoral degree in marital and family therapy and at least two years of supervised clinical experience) who is practicing as a marital and family therapist and is licensed or certified to do so by the State of practice; or, if licensure or certification is not required by the State of practice, is eligible for clinical membership in the American Association for Marriage and Family Therapy.

(c) Practitioners who provide patient care to the population of an area only on a part-time basis (whether because they maintain another office elsewhere, spend some of their time providing services in a facility, are semi-retired, or operate a reduced practice for other reasons), will be counted on a partial basis through the use of full-time-equivalency calculations based on a 40-hour

week. Every 4 hours (or ½ day) spent providing patient care services in ambulatory or inpatient settings will be counted as 0.1 FTE, and each practitioner providing patient care for 40 or more hours per week as 1.0 FTE. Hours spent on research, teaching, vocational or educational counseling, and social services unrelated to mental health will be excluded; if a practitioner is located wholly or partially outside the service area, only those services actually provided within the area are to be counted.

(d) In some cases, practitioners located within an area may not be accessible to the general population of the area under consideration. Practitioners working in restricted facilities will be included on an FTE basis based on time spent outside the facility. Examples of restricted facilities include correctional institutions, youth detention facilities, residential treatment centers for emotionally disturbed or mentally retarded children, school systems, and inpatient units of State or county mental hospitals.

(e) In cases where there are mental health facilities or institutions providing both inpatient and outpatient services, only those FTEs providing mental health services in outpatient units or other short-term care units will be counted.

(f) Adjustments for the following factors will also be made in computing the number of FTE providers:

(i) Practitioners in residency programs will be counted as 0.5 FTE.

(ii) Graduates of foreign schools who are not citizens or lawful permanent residents of the United States will be excluded from counts.

(iii) Those graduates of foreign schools who are citizens or lawful permanent residents of the United States, and practice in certain settings, but do not have unrestricted licenses to practice, will be counted on a full-time-equivalency basis up to a maximum of 0.5 FTE.

(g) Practitioners suspended for a period of 18 months or more under provisions of the Medicare-Medicaid Anti-Fraud and Abuse Act will not be counted.

4. *Determination of unusually high needs for mental health services.* An area will be considered to have unusually high needs for mental health services if one of the following criteria is met:

(a) 20 percent of the population (or of all households) in the area have incomes below the poverty level.

(b) The youth ratio, defined as the ratio of the number of children under 18 to the number of adults of ages 18 to 64, exceeds 0.6.

(c) The elderly ratio, defined as the ratio of the number of persons aged 65 and over to the number of adults of ages 18 to 64, exceeds 0.25.

(d) A high prevalence of alcoholism in the population, as indicated by prevalence data showing the area's alcoholism rates to be in the worst quartile of the nation, region, or State.

(e) A high degree of substance abuse in the area, as indicated by prevalence data showing the area's substance abuse to be in the worst quartile of the nation, region, or State.

5. *Contiguous area considerations.* Mental health professionals in areas contiguous to an area being considered for designation will be considered excessively distant, overutilized or inaccessible to the population of the area under consideration if one of the following conditions prevails in each contiguous area:

(a) Core mental health professionals in the contiguous area are more than 40 minutes travel time from the closest population center of the area being considered for designation (measured in accordance with paragraph B.1(b) of this part).

(b) The population-to-core-mental-health-professional ratio in the contiguous area is in excess of 3,000:1 and the population-to-psychiatrist ratio there is in excess of 10,000:1, indicating that core mental health professionals in the contiguous areas are overutilized and cannot be expected to help alleviate the shortage situation in the area for which designation is being considered. (If data on core mental health professionals other than psychiatrists are not available for the contiguous area, a population-to-psychiatrist ratio there in excess of 20,000:1 may be used to demonstrate overutilization.)

(c) Mental health professionals in contiguous areas are inaccessible to the population of the requested area due to geographic, cultural, language or other barriers or because of residency restrictions of programs or facilities providing such professionals.

C. *Determination of degree of shortage.* Designated areas will be assigned to degree-of-shortage groups according to the following table, depending on the ratio (R_C) of population to number of FTE core-mental-health-service providers (FTE_C); the ratio (R_P) of population to number of FTE psychiatrists (FTE_P); and the presence or absence of high needs:

High Needs Not Indicated

Group 1—FTE_C=0 and FTE_P=0

Group 2—R_C gte* 6,000:1 and FTE_P=0

Group 3—R_C gte 6,000:1 and R_P gte 20,000

Group 4(a)—For psychiatrist placements only: All other areas with FTE_P=0 or R_P gte 30,000

Group 4(b)—For other mental health practitioner placements: All other areas with R_C gte 9,000:1.

*Note: ''gte'' means ''greater than or equal to''.

High Needs Indicated

Group 1—FTE_C=0 and FTE_P=0

Group 2—R_C gte 4,500:1 and FTE_P=0

Group 3—R_C gte 4,500:1 and R_P gte 15,000

Group 4(a)—For psychiatrist placements only: All other areas with FTE_P=0 or R_P gte 20,000

Group 4(b)—For other mental health practitioner placements: All other areas with R_C gte 6,000:1.

D. *Determination of Size of Shortage.* Size of Shortage (in number of FTE professionals needed) will be computed using the following formulas:

(1) For areas without unusually high need:

Core professional shortage=area population/6,000−number of FTE core professionals

Psychiatrist shortage=area population/20,000−number of FTE psychiatrists

(2) For areas with unusually high need:

Core professional shortage=area population/4,500−number of FTE core professionals

Psychiatrist shortage=area population/15,000−number of FTE psychiatrists

Part II—Population Groups

A. *Criteria.* Population groups within particular rational mental health service areas will be designated as having a mental health professional shortage if the following criteria are met:

1. Access barriers prevent the population group from using those core mental health professionals which are present in the area; and

2. One of the following conditions prevails:

(a) The ratio of the number of persons in the population group to the number of FTE core mental health professionals serving the population group is greater than or equal to 4,500:1 and the ratio of the number of persons in the population group to the number of FTE psychiatrists serving the population group is greater than or equal to 15,000:1; or,

(b) The ratio of the number of persons in the population group to the number of FTE core mental health professionals serving the population group is greater than or equal to 6,000:1; or,

(c) The ratio of the number of persons in the population group to the number of FTE psychiatrists serving the population group is greater than or equal to 20,000:1.

B. *Determination of degree of shortage.* Designated population groups will be assigned to the same degree-of-shortage groups defined in part I.C of this appendix for areas with unusually high needs for mental health services, using the computed ratio (R_C) of the number of persons in the population group to the number of FTE core mental health service providers (FTE_C) serving the population group, and the ration (R_P) of the number of persons in the population group to the number of FTE psychiatrists (FTE_P) serving the population group.

C. *Determination of size of shortage.* Size of shortage will be computed as follows:

Core professional shortage=number of persons in population group/4,500−number of FTE core professionals

Psychiatrist shortage=number of persons in population group/15,000−number of FTE psychiatrists

Part III—Facilities

A. *Federal and State Correctional Institutions*

1. *Criteria.*

Medium to maximum security Federal and State correctional institutions for adults or youth, and youth detention facilities, will be designated as having a shortage of psychiatric professional(s) if both of the following criteria are met:

(a) The institution has more than 250 inmates, and

(b) The ratio of the number of internees per year to the number of FTE psychiatrists serving the institution is at least 2,000:1. (Here the number of internees is the number of inmates or residents present at the beginning of the year, plus the number of new inmates or residents entering the institution during the year, including those who left before the end of the year; the number of FTE psychiatrists is computed as in part I, section B, paragraph 3 above.)

2. *Determination of Degree of Shortage.*

Correctional facilities and youth detention facilities will be assigned to degree-of-shortage groups, based on the number of inmates and/or the ratio (R) of internees to FTE psychiatrists, as follows:

Group 1—Facilities with 500 or more inmates or residents and no psychiatrist.

Group 2—Other facilities with no psychiatrists and facilities with 500 or more inmates or residents and R>3,000.

Group 3—All other facilities.

B. *State and County Mental Hospitals.*

1. *Criteria.*

A State or county hospital will be designated as having a shortage of psychiatric professional(s) if both of the following criteria are met:

(a) The mental hospital has an average daily inpatient census of at least 100; and

(b) The number of workload units per FTE psychiatrists available at the hospital exceeds 300, where workload units are calculated using the following formula:

Total workload units = average daily inpatient census + 2 × (number of inpatient admissions per year) + 0.5 × (number of admissions to day care and outpatient services per year).

2. *Determination of Degree of Shortage.*

State or county mental hospitals will be assigned to degree-of-shortage groups, based

on the ratio (R) of workload units to number of FTE psychiatrists, as follows:

Group 1—No psychiatrists, or R>1,800.
Group 2—1,800>R>1,200.
Group 3—1,200>R>600.
Group 4—600>R>300.

C. *Community Mental Health Centers and Other Public or Nonprofit Private Facilities.*

1. *Criteria.*

A community mental health center (CMHC), authorized by Pub. L. 94–63, or other public or nonprofit private facility providing mental health services to an area or population group, may be designated as having a shortage of psychiatric professional(s) if the facility is providing (or is responsible for providing) mental health services to an area or population group designated as having a mental health professional(s), and the facility has insufficient capacity to meet the psychiatric needs of the area or population group.

2. *Methodology.*

In determining whether CMHCs or other public or nonprofit private facilities meet the criteria established in paragraph C.1 of this Part, the following methodology will be used.

(a) *Provision of Services to a Designated Area or Population Group.*

The facility will be considered to be providing services to a designated area or population group if either:

(i) A majority of the facility's mental health services are being provided to residents of designated mental health professional(s) shortage areas or to population groups designated as having a shortage of mental health professional(s); or

(ii) The population within a designated psychiatric shortage area or population group has reasonable access to mental health services provided at the facility. Such reasonable access will be assumed if the population lies within 40 minutes travel time of the facility and nonphysical barriers (relating to demographic and socioeconomic characteristics of the population) do not prevent the population from receiving care at the facility.

(b) *Responsibility for Provision of Services.*

This condition will be considered to be met if the facility, by Federal or State statute, administrative action, or contractual agreement, has been given responsibility for providing and/or coordinating mental health services for the area or population group, consistent with applicable State plans.

(c) *Insufficient capacity to meet mental health service needs.* A facility will be considered to have insufficient capacity to meet the mental health service needs of the area or population it serves if:

(i) There are more than 1,000 patient visits per year per FTE core mental health professional on staff of the facility, or

(ii) There are more than 3,000 patient visits per year per FTE psychiatrist on staff of the facility, or

(iii) No psychiatrists are on the staff and this facility is the only facility providing (or responsible for providing) mental health services to the designated area or population.

3. *Determination of Degree-of-Shortage.*

Each designated facility will be assigned to the same degree-of-shortage group as the designated area or population group which it serves.

[45 FR 76000, Nov. 17, 1980, as amended at 54 FR 8738, Mar. 2, 1989; 57 FR 2477, Jan. 22, 1992]

APPENDIX D TO PART 5—CRITERIA FOR DESIGNATION OF AREAS HAVING SHORTAGES OF VISION CARE PROFESSIONAL(S)

Part I—Geographic Areas

A. *Criteria.*

A geographic area will be designated as having a shortage of vision care professional(s) if the following three criteria are met:

1. The area is a rational area for the delivery of vision care services.

2. The estimated number of optometric visits supplied by vision care professional(s) in the area is less than the estimated requirements of the area's population for these visits, and the computed shortage is at least 1,500 optometric visits.

3. Vision care professional(s) in contiguous areas are excessively distant, overutilized, or inaccessible to the population of the area under consideration.

B. *Methodology.*

In determining whether an area meets the criteria established by paragraph A of this part, the following methodology will be used:

1. *Rational Areas for the Delivery of Vision Care Services.*

(a) The following areas will be considered rational areas for the delivery of vision care services:

(i) A county, or a group of contiguous counties whose population centers are within 40 minutes travel time of each other;

(ii) A portion of a county (or an area made up of portions of more than one county) whose population, because of topography, market or transportation patterns, or other factors, has limited access to contiguous area resources, as measured generally by a travel time of greater than 40 minutes to these resources.

(b) The following distances will be used as guidelines in determining distances corresponding to 40 minutes travel time:

(i) Under normal conditions with primary roads available: 25 miles.

(ii) In mountainous terrain or in areas with only secondary roads available: 20 miles.

(iii) In flat terrain or in areas connected by interstate highways: 30 miles.

Within inner portions of metropolitan areas, information on the public transportation system will be used to determine the distance corresponding to 40 minutes travel time.

2. *Determination of Estimated Requirement for Optometric Visits.*

The number of optometric visits required by an area's population will be estimated by multiplying each of the following visit rates by the size of the population within that particular age group and then adding the figures obtained together.

Age	Annual number of optometric visits required per person, by age					
	Under 20	20–29	30–39	40–49	50–59	60 and over
Number of visits	0.11	0.20	0.24	0.35	0.41	0.48

For geographic areas where the age distribution of the population is not known, it will be assumed that the percentage distribution, by age groups, for the area is the same as the distribution for the county of which it is a part.

(3) *Determination of Estimated Supply of Optometric Visits.*

The estimated supply of optometric services will be determined by use of the following formula:

Optometric visits supplied = 3,000 × (number of optometrists under 65)

Optometric visits supplied + 2,000 × (number of optometrists 65 and over)

Optometric visits supplied + 1,500 × (number of ophthamologists)

(4) *Determination of Size of Shortage.*

Size of shortage (in number of optometric visits) will be computed as follows:

Optometric visit shortage = visits required − visits supplied

(5) *Contiguous Area Considerations.*

Vision care professional(s) in area contiguous to an area being considered for designation will be considered execessively distant, overutilized or inaccessible to the population of the area if one of the following conditions prevails in each contiguous area:

(a) Vision care professional(s) in the contiguous area are more than 40 minutes travel time from the center of the area being considered for designation (measured in accordance with paragraph B.1(b) of this part).

(b) The estimated requirement for vision care services in the contiguous area exceeds the estimated supply of such services there, based on the requirements and supply calculations previously described.

(c) Vision care professional(s) in the contiguous area are inaccessible to the population of the area because of specified access barriers (such as economic or cultural barriers).

C. *Determination of Degree-of-Shortage.*

Designated areas (and population groups) will be assigned to degree-of-shortage groups, based on the ratio of optometric visits supplied to optometric visits required for the area (or group), as follows:

Group 1—Areas (or groups) with no optometric visits being supplied (i.e., with no optometrists or ophthalmologists).

Group 2—Areas (or groups) where the ratio of optometric visits supplied to optometric visits required is less than 0.5.

Group 3—Areas (or groups) where the ratio of optometric visits supplied to optometric visits required is between 0.5 and 1.0.

Part II—Population Groups

A. *Criteria.*

Population groups within particular geographic areas will be designated if both the following criteria are met:

(1) Members of the population group do not have access to vision care resources within the area (or in contiguous areas) because of non-physical access barriers (such as economic or cultural barriers).

(2) The estimated number of optometric visits supplied to the population group (as determined under paragraph B.3 of part I of this Appendix) is less than the estimated number of visits required by that group (as determined under paragraph B.2 of part I of this Appendix), and the computed shortage is at least 1,500 optometric visits.

B. *Determination of Degree of Shortage.*

The degree of shortage of a given population group will be determined in the same way as described for areas in paragraph C of part I of this appendix.

APPENDIX E TO PART 5—CRITERIA FOR DESIGNATION OF AREAS HAVING SHORTAGES OF PODIATRIC PROFESSIONAL(S)

Part I—Geographic Areas

A. *Criteria.*

A geographic area will be designated as having a shortage of podiatric professional(s) if the following three criteria are met:

1. The area is a rational area for the delivery of podiatric services.

2. The area's ratio of population to foot care practitioners is at least 28,000:1, and the computed podiatrist shortage to meet this ratio is at least 0.5.

3. Podiatric professional(s) in contiguous areas are overutilized, excessively distant, or inaccessible to the population of the area under consideration.

B. *Methodology.*

In determining whether an area meets the criteria established by paragraph A of this Part, the following methodology will be used:

1. *Rational Areas for the Delivery of Podiatric Services.*

(a) The following areas will be considered rational areas for the delivery of podiatric services:

(i) A county or a group of contiguous counties whose population centers are within 40 minutes travel time of each other.

(ii) A portion of a county, or an area made up of portions of more than one county, whose population, because of topography, market and/or transportation patterns or other factors, has limited access to contiguous area resources, as measured generally by a travel time of greater than 40 minutes from its population center to these resources.

(b) The following distances will be used as guidelines in determining distances corresponding to 40 minutes travel time:

(i) Under normal conditions with primary roads available: 25 miles.

(ii) In mountainous terrain or in areas with only secondary roads available: 20 miles.

(iii) In flat terrain or in areas connected by interstate highways: 30 miles.

Within inner portions of metropolitan areas, information on the public transportation system will be used to determine the area corresponding to 40 minutes travel time.

2. *Population Count.*

The population count used will be the total permanent resident civilian population of the area, excluding inmates of institutions, adjusted by the following formula to take into account the differing utilization rates of podiatric services by different age groups within the population:

Adjusted population=total population × (1 + 2.2 × (percent of population 65 and over) − 0.44 × (percent of population under 17)).

3. *Counting of Foot Care Practitioners.*

(a) All podiatrists providing patient care will be counted. However, in order to take into account productivity differences in podiatric practices associated with the age of the podiatrists, the following formula will be utilized:

Number of FTE podiatrists = 1.0 × (podiatrists under age 55)
+ .8 × (podiatrists age 55 and over)

(b) In order to take into account the fact that orthopedic surgeons and general and family practitioners devote a percentage of their time to foot care, the total available foot care practitioners will be computed as follows:

Number of foot care practitioners = number of FTE podiatrists
+ .15 × (number of orthopedic surgeons)
+ .02 × (number of general and family practioners).

4. *Determination of Size of Shortage.*

Size of shortage (in number of FTE podiatrists) will be computed as follows:

Podiatrist shortage = adjusted population/28,000 − number of FTE foot care practitioners.

5. *Contiguous Area Considerations.*

Podiatric professional(s) in areas contiguous to an area being considered for designation will be considered excessively distant, overutilized or inaccessible to the population of the area under consideration if one of the following conditions prevails in each contiguous area:

(a) Podiatric professional(s) in the contiguous area are more than 40 minutes travel time from the center of the area being considered for designation.

(b) The population-to-foot care practitioner ratio in the contiguous areas is in excess of 20,000:1, indicating that contiguous area podiatric professional(s) cannot be expected to help alleviate the shortage situation in the area for which designation is requested.

(c) Podiatric professional(s) in the contiguous area are inaccessible to the population of the area under consideration because of specified access barriers (such as economic or cultural barriers).

C. *Determination of Degree of Shortage.*

Designated areas will be assigned to groups, based on the ratio (R) of adjusted population to number of foot care practitioners, as follows:

Group 1 Areas with no foot care practitioners, and areas with R > 50,000 and no podiatrists.

Group 2 Other areas with R > 50,000.

Group 3 Areas with 50,000 > R > 28,000.

APPENDIX F TO PART 5—CRITERIA FOR DESIGNATION OF AREAS HAVING SHORTAGES OF PHARMACY PROFESSIONAL(S)

Part I—Geographic Areas

A. *Criteria.*

A geographic area will be designated as having a shortage of pharmacy professional(s) if the following three criteria are met:

1. The area is a rational area for the delivery of pharmacy services.

2. The number of pharmacists serving the area is less than the estimated requirement for pharmacists in the area, and the computed pharmacist shortage is at least 0.5.

3. Pharmacists in contiguous areas are overutilized or excessively distant from the population of the area under consideration.

B. *Methodology.*

In determining whether an area meets the criteria established by paragraph A of this Part, the following methodology will be used:

1. *Rational Areas for the Delivery of Pharmacy Services.*

(a) The following areas will be considered rational areas for the delivery of pharmacy services:

(i) A county, or a group of contiguous counties whose population centers are within 30 minutes travel time of each other; and

(ii) A portion of a county, or an area made up of portions of more than one county, whose population, because of topography, market or transportation patterns or other factors, has limited access to contiguous area resources, as measured generally by a travel time of greater than 30 minutes to these resources.

(b) The following distances will be used as guidelines in determining distances corresponding to 30 minutes travel time:

(i) Under normal conditions with primary roads available: 20 miles.

(ii) In mountainous terrain or in areas with only secondary roads available: 15 miles.

(iii) In flat terrain or in areas connected by interstate highways: 25 miles.

Within inner portions of metropolitan areas, information on the public transportation system will be used to determine the area corresponding to 30 minutes travel time.

2. *Counting of Pharmacists.*

All active pharmacists within the area will be counted, except those engaged in teaching, administration, or pharmaceutical research.

3. *Determination of Estimated Requirement for Pharmacists.*

(a) *Basic estimate.* The basic estimated requirement for pharmacists will be calculated as follows:

Basic pharmacist requirement = .15 × (resident civilian population/1,000) + .035 × (total number of physicians engaged in patient care in the area).

(b) *Adjusted estimate.* For areas with less than 20,000 persons, the following adjustment is made to the basic estimate to compensate for the lower expected productivity of small practices.

Estimated pharmacist requirement = (2 − population/20,000) × basic pharmacist requirement.

4. *Size of Shortage Computation.*

The size of the shortage will be computed as follows:

Pharmacist shortage = estimated pharmacist requirement − number of pharmacists available.

5. *Contiguous Area Considerations.*

Pharmacists in areas contiguous to an area being considered for designation will be considered excessively distant or overutilized if either:

(a) Pharmacy professional(s) in contiguous areas are more than 30 minutes travel time from the center of the area under consideration, or

(b) The number of pharmacists in each contiguous area is less than or equal to the estimated requirement for pharmacists for that contiguous area (as computed above).

C. *Determination of Degree-of-Shortage.*

Designated areas will be assigned to degree-of-shortage groups, based on the proportion of the estimated requirement for pharmacists which is currently available in the area, as follows:

Group 1—Areas with no pharmacists.

Group 2—Areas where the ratio of available pharmacists to pharmacists required is less than 0.5.

Group 3—Areas where the ratio of available pharmacists to pharmacists required is between 0.5 and 1.0.

APPENDIX G TO PART 5—CRITERIA FOR THE DESIGNATION OF AREAS HAVING SHORTAGES OF VETERINARY PROFESSIONAL(S)

Part I—Geographic Areas

A. *Criteria for Food Animal Veterinary Shortage.*

A geographic area will be designated as having a shortage of food animal veterinary professional(s) if the following three criteria are met:

1. The area is a rational area for the delivery of veterinary services.

2. The ratio of veterinary livestock units to food animal veterinarians in the area is at least 10,000:1, and the computed food animal veterinarian shortage to meet this ratio is at least 0.5.

3. Food animal veterinarians in contiguous areas are overutilized or excessively distant from the population of the area under consideration.

B. *Criteria for Companion Animal Veterinary Shortage.*

A geographic area will be designated as having a shortage of companion animal veterinary professional(s) if the following three criteria are met:

1. The area is a rational area for the delivery of veterinary services.

2. The ratio of resident civilian population to number of companion animal veterinarians in the area is at least 30,000:1 and the computed companion animal veterinary shortage to meet this ratio is at least 0.5.

3. Companion animal veterinarians in contiguous areas are overutilized or excessively distant from the population of the area under consideration.

C. *Methodology.*

In determining whether an area meets the criteria established by paragraphs A and B of this part, the following methodology will be used:

1. *Rational Areas for the Delivery of Veterinary Services.*

(a) The following areas will be considered rational areas for the delivery of veterinary services:

(i) A county, or a group of contiguous counties whose population centers are within 40 minutes travel time of each other.

(ii) A portion of a county (or an area made up of portions of more than one county) which, because of topography, market and/or transportation patterns or other factors, has limited access to contiguous area resources, as measured generally by a travel time of greater than 40 minutes to these resources.

(b) The following distances will be used as guidelines in determining distances corresponding to 40 minutes travel time:

(i) Under normal conditions with primary roads available: 25 miles.

(ii) In mountainous terrain or in areas with only secondary roads available: 20 miles.

(iii) In flat terrain or in areas connected by interstate highways: 30 miles.

2. *Determination of Number of Veterinary Livestock Units (VLU) Requiring Care.*

Since various types of food animals require varying amounts of veterinary care, each type of animal has been assigned a weight indicating the amount of veterinary care it requires relative to that required by a milk cow. Those weights are used to compute the number of ''Veterinary Livestock Units'' (VLU) for which veterinary care is required.

The VLU is computed as follows:

Veterinary Livestock Units (VLU)=(number of milk cows)
+.2×(number of other cattle and calves)
+.05×(number of hogs and pigs)
+.05×(number of sheep)
+.002×(number of poultry).

3. *Counting of Food Animal Veterinarians.*

The number of food animal veterinarians is determined by weighting the number of veterinarians within each of several practice categories according to the average fraction of practice time in that category which is devoted to food animal veterinary care, as follows:

Number of Food Animal Veterinarians=(number of veterinarians in large animal practice, exclusively)
+(number of veterinarians in bovine practice, exclusively)
+(number of veterinarians in poultry practice, exclusively)
+.75×(mixed practice veterinarians with greater than 50% of practice in large animal care)
+.5×(mixed practice veterinarians with approximately 50% of practice in large animal care)
+.25×(mixed practice veterinarians with less than 50% of practice in large animal care).

4. *Counting of Companion Animal Veterinarians* (that is, those who provide services for dogs, cats, horses, and any other animals maintained as companions to the owner rather than as food animals).

The number of full-time equivalent companion animal veterinarians is determined by weighting the number of veterinarians within each of several practice categories by the average portion of their practice which is devoted to companion animal care by the practitioners within that category, as follows:

Number of Companion Animal Veterinarians=(number of veterinarians in large animal practice, exclusively)
+(number of veterinarians in equine practice, exclusively)
+.75×(mixed practice veterinarians with greater than 50% of practice in small animal care)
+.5×(mixed practice veterinarians with approximately 50% of practice in small animal care)
+.25×(mixed practice veterinarians with less than 50% of practice in small animal care).

5. *Size of Shortage Computation.*

The size of shortage will be computed as follows:

(a) Food animal veterinarian shortage=(VLU/10,000)−(number of food animal veterinarians).

(b) Companion animal veterinarian shortage=(resident civilian pop./30,000)−(number of companion animal veterinarians).

6. *Contiguous Area Considerations.*

Veterinary professional(s) in areas contiguous to an area being considered for designation will be considered excessively distant from the population of the area or overutilized if one of the following conditions prevails in each contiguous area:

(a) Veterinary professional(s) in the contiguous area are more than 60 minutes travel

time from the center of the area being considered for designation (measured in accordance with paragraph C.1.(b) of this part).

(b) In the case of food animal veterinary professional(s), the VLU-to-food animal veterinarian ratio in the contiguous area is in excess of 5,000:1.

(c) In the case of companion animal veterinary professional(s), the population-to-companion animal veterinarian ratio in the contiguous area is in excess of 15,000:1.

C. *Determination of Degree-of-Shortage.*

Designated areas will be assigned to degree-of-shortage groups as follows:

Group 1—Areas with a food animal veterinarian shortage and no veterinarians.

Group 2—Areas (not included above) with a food animal veterinarian shortage and no food animal veterinarians.

Group 3—All other food animal veterinarian shortage areas.

Group 4—All companion animal shortage areas (not included above) having no veterinarians.

Group 5—All other companion animal shortage areas.

PART 6—FEDERAL TORT CLAIMS ACT COVERAGE OF CERTAIN GRANTEES AND INDIVIDUALS

Sec.
6.1 Applicability.
6.2 Definitions.
6.3 Eligible entities.
6.4 Covered individuals.
6.5 Deeming process for eligible entities.
6.6 Covered acts and omissions.

AUTHORITY: Sections 215 and 224 of the Public Health Service Act, 42 U.S.C. 216 and 233.

SOURCE: 60 FR 22532, May 8, 1995, unless otherwise noted.

§ 6.1 Applicability.

This part applies to entities and individuals whose acts and omissions related to the performance of medical, surgical, dental, or related functions are covered by the Federal Tort Claims Act (28 U.S.C. 1346(b) and 2671–2680) in accordance with the provisions of section 224(g) of the Public Health Service Act (42 U.S.C. 233(g)).

§ 6.2 Definitions.

Act means the Public Health Service Act, as amended.

Attorney General means the Attorney General of the United States and any other officer or employee of the Department of Justice to whom the authority involved has been delegated.

Covered entity means an entity described in §6.3 which has been deemed by the Secretary, in accordance with §6.5, to be covered by this part.

Covered individual means an individual described in §6.4.

Effective date as used in §6.5 and §6.6 refers to the date of the Secretary's determination that an entity is a covered entity.

Secretary means the Secretary of Health and Human Services (HHS) and any other officer or employee of the Department of HHS to whom the authority involved has been delegated.

Subrecipient means an entity which receives a grant or a contract from a covered entity to provide a full range of health services on behalf of the covered entity.

§ 6.3 Eligible entities.

(a) *Grantees.* Entities eligible for coverage under this part are public and nonprofit private entities receiving Federal funds under any of the following grant programs:

(1) Section 329 of the Act (relating to grants for migrant health centers);

(2) Section 330 of the Act (relating to grants for community health centers);

(3) Section 340 of the Act (relating to grants for health services for the homeless); and

(4) Section 340A of the Act (relating to grants for health services for residents of public housing).

(b) *Subrecipients.* Entities that are subrecipients of grant funds described in paragraph (a) of this section are eligible for coverage only if they provide a full range of health care services on behalf of an eligible grantee and only for those services carried out under the grant funded project.

§ 6.4 Covered individuals.

(a) Officers and employees of a covered entity are eligible for coverage under this part.

(b) Contractors of a covered entity who are physicians or other licensed or certified health care practitioners are eligible for coverage under this part if they meet the requirements of section 224(g)(5) of the Act.

(c) An individual physician or other licensed or certified health care practitioner who is an officer, employee, or

contractor of a covered entity will not be covered for acts or omissions occurring after receipt by the entity employing such individual of notice of a final determination by the Attorney General that he or she is no longer covered by this part, in accordance with section 224(i) of the Act.

§6.5 Deeming process for eligible entities.

Eligible entities will be covered by this part only on and after the effective date of a determination by the Secretary that they meet the requirements of section 224(h) of the Act. In making such determination, the Secretary will receive such assurances and conduct such investigations as he or she deems necessary.

§6.6 Covered acts and omissions.

(a) Only acts and omissions occurring on and after the effective date of the Secretary's determination under §6.5 and before the later date specified in section 224(g)(3) of the Act are covered by this part.

(b) Only claims for damage for personal injury, including death, resulting from the performance of medical, surgical, dental, or related functions are covered by this part.

(c) With respect to covered individuals, only acts and omissions within the scope of their employment (or contract for services) are covered. If a covered individual is providing services which are not on behalf of the covered entity, such as on a volunteer basis or on behalf of a third-party (except as described in paragraph (d) of this section), whether for pay or otherwise, acts and omissions which are related to such services are not covered.

(d) Only acts and omissions related to the grant-supported activity of entities are covered. Acts and omissions related to services provided to individuals who are not patients of a covered entity will be covered only if the Secretary determines that:

(1) The provision of the services to such individuals benefits patients of the entity and general populations that could be served by the entity through community-wide intervention efforts within the communities served by such entity;

(2) The provision of the services to such individuals facilitates the provision of services to patients of the entity; or

(3) Such services are otherwise required to be provided to such individuals under an employment contract or similar arrangement between the entity and the covered individual.

(e) *Examples.* The following are examples of situations within the scope of paragraph (d) of this section:

(1) A community health center deemed to be a covered entity establishes a school-based or school-linked health program as part of its grant supported activity. Even though the students treated are not necessarily registered patients of the center, the center and its health care practitioners will be covered for services provided, if the Secretary makes the determination in paragraph (d)(1) of this section.

(2) A migrant health center requires its physicians to obtain staff privileges at a community hospital. As a condition of obtaining such privileges, and thus being able to admit the center's patients to the hospital, the physicians must agree to provide occasional coverage of the hospital's emergency room. The Secretary would be authorized to determine that this coverage is necessary to facilitate the provision of services to the grantee's patients, and that it would therefore be covered by paragraph (d)(2) of this section.

(3) A homeless health services grantee makes arrangements with local community providers for after-hours coverage of its patients. The grantee's physicians are required by their employment contracts to provide periodic cross-coverage for patients of these providers, in order to make this arrangement feasible. The Secretary may determine that the arrangement is within the scope of paragraph (d)(3) of this section.

[60 FR 22532, May. 8, 1995; 60 FR 36073, July 13, 1995]

PART 7—DISTRIBUTION OF REFERENCE BIOLOGICAL STANDARDS AND BIOLOGICAL PREPARATIONS

Sec.
7.1 Applicability.
7.2 Establishment of a user charge.
7.3 Definitions.
7.4 Schedule of charges.
7.5 Payment procedures.
7.6 Exemptions.

AUTHORITY: Sec. 215, 58 Stat. 690, as amended (42 U.S.C. 216); title V of the Independent Offices Appropriation Act of 1952 (31 U.S.C. 9701); and sec. 352 of the Public Health Service Act, as amended (42 U.S.C. 263).

SOURCE: 52 FR 11073, Apr. 7, 1987, unless otherwise noted.

§ 7.1 Applicability.

The provisions of this part are applicable to private entities requesting from the Centers for Disease Control (CDC) reference biological standards and biological preparations for use in their laboratories.

§ 7.2 Establishment of a user charge.

Except as otherwise provided in § 7.6, a user charge shall be imposed to cover the cost to CDC of producing and distributing reference biological standards and biological preparations.

§ 7.3 Definitions.

Biological standards means a uniform and stable reference biological substance which allows measurements of relative potency to be made and described in a common currency of international and national units of activity.

Biological preparations means a reference biological substance which may be used for a purpose similar to that of a standard, but which has been established without a full collaborative study, or where a collaborative study has shown that it is not appropriate to establish the preparation as an international standard.

§ 7.4 Schedule of charges.

The charges imposed in § 7.2 are based on the amount published in CDC's price list of available products. These charges will reflect direct costs (such as salaries and equipment), indirect costs (such as rent, telephone service, and a proportionate share of management and administrative costs), and the costs of particular ingredients. Charges may vary over time and between different biological standards or biological preparations, depending upon the cost of ingredients and the complexity of production. An up-to-date schedule of charges is available from the Biological Products Branch, Center for Infectious Diseases, Centers for Disease Control, 1600 Clifton Road, Atlanta, Georgia 30333.

§ 7.5 Payment procedures.

The requester may obtain information on terms of payment and a fee schedule by writing the ''Centers for Disease Control,'' Financial Management Office, Buckhead Facility, Room 200, Centers for Disease Control, 1600 Clifton Road, Atlanta, Georgia 30333.

§ 7.6 Exemptions.

State and local health departments, governmental institutions (e.g., State hospitals and universities), the World Health Organization, and ministries of health of foreign governments may be exempted from paying user charges, when using biological standards or biological preparations for public health purposes.

SUBCHAPTER B—PERSONNEL

PART 21—COMMISSIONED OFFICERS

Subpart A—Definitions

Sec.
21.1 Meaning of terms.

Subpart B—Appointment

PROVISIONS APPLICABLE BOTH TO REGULAR AND RESERVE CORPS

21.21 Meaning of terms.
21.22 Submission of application and evidence of qualifications.
21.23 False statements as disqualification.
21.24 Physical examinations.
21.25 Eligibility; junior assistant grade.
21.26 Eligibility; assistant grade.
21.27 Eligibility; senior assistant grade.
21.28 Age requirements, Regular Corps, senior assistant grade and below.
21.29 Eligibility; grades above senior assistant grade.
21.30 Determination of creditable years of educational and professional training and experience.
21.31 Eligibility; all grades; academic and professional education and professional training and experience.
21.32 Boards; appointment of; powers and duties.
21.33 General service.
21.34 Certification by candidate; requirement of new physical examination.

PROVISIONS APPLICABLE ONLY TO REGULAR CORPS

21.41 Professional examinations, holding of; subjects to be included.
21.42 Examinations; junior assistant, assistant, or senior assistant grade.
21.43 Examination; full grade and above.
21.44 Clinical or other practical demonstration.
21.45 Rating values.
21.46 Merit roll.
21.47 Examination; anticipation of meeting qualifications.

PROVISIONS APPLICABLE ONLY TO RESERVE CORPS

21.51 Appointment of officers having specialized training or experience in administration and management.
21.52 Waiver of entrance qualifications for original appointment in time of war or national emergency.
21.53 Examination.
21.54 Students.
21.55 Appointment to higher grades; candidates exceptionally qualified in specialized fields.
21.56 Reappointment.
21.57 Examination for reappointment.
21.58 Physical examination for reappointment.

Subpart C—Involuntary Child and Spousal Support Allotments

21.70 Purpose.
21.71 Applicability and scope.
21.72 Definitions.
21.73 Policy.
21.74 Responsibilities.
21.75 Procedures.

Subpart A—Definitions

AUTHORITY: Sec. 215, 58 Stat. 690, as amended; 42 U.S.C. 216.

§ 21.1 Meaning of terms.

As used in this part, the term:

(a) *Act* means the Public Health Service Act, 58 Stat. 682, as now or hereafter amended.

(b) *Department* means the Department of Health and Human Services.

(c) *Secretary* means the Secretary of Health and Human Services.

(d) *Service* means the Public Health Service.

(e) *Surgeon General* means the Surgeon General of the Public Health Service.

(f) *Commissioned officer* or *officer*, unless otherwise indicated, means either an officer of the Regular Corps or an officer of the Reserve Corps.

[21 FR 9806, Dec. 12, 1956]

Subpart B—Appointment

AUTHORITY: Sec. 215, 58 Stat. 690, as amended; 42 U.S.C. 216; sec. 208, 58 Stat. 685, as amended; 42 U.S.C. 209.

SOURCE: 21 FR 9806, Dec. 12, 1956, unless otherwise noted.

PROVISIONS APPLICABLE BOTH TO REGULAR AND RESERVE CORPS

§ 21.21 Meaning of terms.

The terms *approved school*, *approved college*, *approved postgraduate school*, or

approved training course means, except as otherwise provided by law:

(a) A school, college, postgraduate school, or training course which has been accredited or approved by a professional body or bodies recognized by the Surgeon General for such purpose, or which, in the absence of such a body, meets generally accepted professional standards as determined by the Surgeon General, or

(b) In the case of a candidate who is applying for appointment as a medical officer, any non-approved medical school provided that the candidate has passed examinations given by a professional body or bodies recognized by the Surgeon General for such purpose.

[24 FR 1790, Mar. 12, 1959]

§ 21.22 Submission of application and evidence of qualifications.

(a) *Application form.* Every candidate for examination for appointment as an officer shall submit a written application on such form as may be prescribed by the Surgeon General.

(b) *Documentary evidence.* The application shall be accompanied by such documentary evidence as may be required by the Surgeon General.

§ 21.23 False statements as disqualification.

Willfully false statements shall be cause for rejection of the application or, as provided in subpart N of this part, for dismissal.

§ 21.24 Physical examinations.

Every candidate for appointment as an officer shall undergo such physical examination as the Surgeon General may direct, and no candidate who is not found to be physically qualified shall be appointed as an officer.

§ 21.25 Eligibility; junior assistant grade.

(a) *Requirements; all candidates.* Except as provided in § 21.54, and as otherwise provided in this section, every candidate for examination for appointment in the grade of junior assistant:

(1) Shall be a citizen of the United States;

(2) Shall be at least 18 years of age; and

(3) Shall have been granted an academic or professional degree from an approved school, college, or postgraduate school, and, unless the required professional training has been otherwise obtained from an approved school, college, or postgraduate school, shall have majored in the profession in which the examination is being held.

(b) [Reserved]

(c) *Special requirement; therapists.* Every candidate for examination for appointment as a therapist shall have received a certificate from an approved school of physical therapy or an approved school of occupational therapy.

[21 FR 9806, Dec. 12, 1956, as amended at 30 FR 9437, July 29, 1965]

§ 21.26 Eligibility; assistant grade.

(a) *Requirements; all candidates.* Except as otherwise provided in this section every candidate for examination for appointment in the grade of assistant:

(1) Shall meet the requirements for eligibility for examination for appointment in the grade of junior assistant;

(2) Shall be at least 21 years of age; and

(3) Shall have had at least 7 years of educational and professional training or experience subsequent to high school, except that a candidate who applies for examination for appointment in the Reserve Corps to serve as a medical or dental intern may be examined for such appointment upon the completion of 6 years of such education, training, or experience.

(b) *Additional requirements; dietitians.* Every candidate for examination for appointment as a dietitian shall have successfully completed an approved training course for dietetic interns.

§ 21.27 Eligibility; senior assistant grade.

Every candidate for examination for appointment in the grade of senior assistant shall meet the requirements for eligibility for examination for appointment in the grade of assistant and shall have completed at least 10 years of educational and professional training or experience subsequent to high school.

§ 21.28 Age requirements, Regular Corps, senior assistant grade and below.

No candidate for appointment to the Regular Corps, except in the nurse category, shall be appointed (a) after age 31 to the permanent junior assistant grade, (b) after age 34 to the permanent assistant grade, or (c) after age 37 to the permanent senior assistant grade: *Provided*, That the Surgeon General may waive these age limitations, subject to other provisions of law, in the case of any officer of the Reserve Corps who is recommended for appointment to the Regular Corps by the Chief of the Bureau to which he is assigned and who has been on continuous active duty for at least two years immediately preceding the date of such recommendation. The age limitations for candidates who have had prior active service in the Commissioned Corps of the Public Health Service shall be increased by the period of such service.

[27 FR 3886, Apr. 24, 1962]

§ 21.29 Eligibility; grades above senior assistant grade.

Every candidate for examination for appointment in grades above that of senior assistant shall meet the requirements for eligibility for examination for appointment in the grade of senior assistant. Candidates for examination for appointment in the full, senior, or director grade shall have completed at least 7, 14, or 15 additional years, respectively, of postgraduate professional training for experience. When officers of the Service are unavailable for the performance of duties requiring highly specialized training and experience in special fields related to public health, the Surgeon General may specify that a candidate for appointment to the Regular Corps with such highly specialized training and experience shall be examined for appointment in the full or senior grade upon completion of at least 5 or 12 additional years, respectively, of postgraduate professional training or experience, except that the total number of such appointments during a fiscal year shall not exceed three.

[21 FR 9806, Dec. 12, 1956. Redesignated at 25 FR 5184, June 10, 1960]

§ 21.30 Determination of creditable years of educational and professional training and experience.

The level of academic attainment, the number of calendar years and the quality of educational and professional training and experience shall be considered in determining the number of years of such training and experience with which each candidate for appointment may be credited.

[25 FR 5184, June 10, 1960]

§ 21.31 Eligibility; all grades; academic and professional education and professional training and experience.

The Surgeon General is authorized, subject to the other provisions of this subpart to adopt additional standards by which the education, training, and experience required under this subpart, and evidence thereof, shall be of such specific kind and quality, pertinent to the particular profession concerned, as in his judgment are necessary to limit the examination to qualified candidates.

[21 FR 9806, Dec. 12, 1956. Redesignated at 25 FR 5184, June 10, 1960]

§ 21.32 Boards; appointment of; powers and duties.

The Surgeon General shall from time to time appoint boards and subboards of officers to consider the qualifications of candidates for appointment as officers, and shall refer to such boards the applications of those candidates who are eligible for examination for appointment. Such boards and subboards shall consist of three or more officers, the majority of whom, so far as practicable, shall be of the same profession as the candidate. The Surgeon General shall prescribe the duties of boards and subboards in relation to the examination process not otherwise prescribed in this subpart.

[21 FR 9806, Dec. 12, 1956. Redesignated at 25 FR 5184, June 10, 1960]

§ 21.33 General service.

Officers shall be appointed only to general service and shall be subject to change of station.

[21 FR 9806, Dec. 12, 1956. Redesignated at 25 FR 5184, June 10, 1960]

§ 21.34 Certification by candidate; requirement of new physical examination.

If a candidate for appointment in the Regular Corps or an officer of the Reserve Corps on inactive service has passed a physical examination within a period of one year from the date on which it is contemplated that he will be appointed or called to active duty, he shall, prior to being appointed or called to active duty, certify that to the best of his knowledge and belief he is free from all disease or injury not noted in his record at the time of his examination and that he is willing to serve in any climate. If a candidate for appointment in the Regular Corps, or an officer of the Reserve Corps on inactive service, has not passed a physical examination within a period of one year from the date on which it is contemplated that he will be appointed or called to active duty, he may, prior to being appointed or called to active duty, be required to undergo such physical examination as the Surgeon General may direct to determine his physical qualification for appointment or call to active duty in accordance with standards prescribed for original appointment, or he may be appointed or called to active duty after executing the certificate described in this section, but shall be physically examined to determine his physical qualification for continued active service in accordance with standards prescribed for original appointment within a period of 15 days after reporting for duty at his first station.

[21 FR 9806, Dec. 12, 1956, as amended at 24 FR 1790, Mar. 12, 1959. Redesignated at 25 FR 5184, June 10, 1960]

PROVISIONS APPLICABLE ONLY TO REGULAR CORPS

§ 21.41 Professional examinations, holding of; subjects to be included.

From time to time the Surgeon General may order examinations to be held in such professions or specialties within professions and for such grades as he deems necessary for the purpose of providing merit rolls of eligible candidates for appointment in the Regular Corps and shall, if a professional examination is to be required, prescribe the subjects relating to each profession or specialty within such profession in which candidates will be examined.

[21 FR 9806, Dec. 12, 1956, as amended at 24 FR 1790, Mar. 12, 1959]

§ 21.42 Examinations; junior assistant, assistant, or senior assistant grade.

The examination for appointment to the junior assistant, assistant, or senior assistant grade in the Regular Corps shall consist of (a) a written professional examination relating to the fundamentals of the candidate's profession or specialty within his profession and their relationship to the activities of the Service, and (b) an examination as to the candidate's general fitness, which shall include an oral interview, and a review and evaluation of the candidate's academic and professional education and professional training and experience, and may include other written tests to determine the candidate's fitness for appointment as an officer. If an applicant for appointment to any of these grades is an officer of the Reserve Corps who has been on active duty for not less than one year immediately preceding his application, the Surgeon General may direct that the officer be examined as provided in § 21.43.

[21 FR 9806, Dec. 12, 1956, as amended at 24 FR 1790, Mar. 12, 1959; 25 FR 11099, Nov. 23, 1960]

§ 21.43 Examination; full grade and above.

The examination for appointment to the full, senior, or director grade in the Regular Corps shall consist of a review and evaluation of the candidate's academic and professional education and professional training and experience. The Surgeon General may, however, direct that the examination of a candidate for appointment to any such grade shall also include an oral interview, a written or oral professional examination, or both.

§ 21.44 Clinical or other practical demonstration.

In the discretion of the Surgeon General a candidate for appointment to any grade up to and including the senior assistant grade in the Regular

Corps may be required to perform successfully a clinical or other practical demonstration which, if required, shall constitute a part of the professional examination.

§21.45 Rating values.

The examination of every candidate for appointment to any grade in the Regular Corps shall be rated by a board appointed pursuant to §21.30 in accordance with such relative values for each part of the examination as are prescribed by the Surgeon General. No candidate who receives a final rating below 80 shall be appointed in the Regular Corps.

§21.46 Merit roll.

Each board appointed pursuant to §21.30 to consider the qualifications of candidates for appointment as officers shall assign a numerical rating to each candidate for appointment in the Regular Corps who passes the examination, and shall submit a report to the Surgeon General of the ratings and the relative standing of all such candidates for each grade in each profession or specialty within a profession. The Surgeon General shall submit each such report with his recommendations to the Secretary, and, if approved by the Secretary, the report shall constitute a merit roll from which the Secretary shall, in accordance with relative standing, recommend available persons to the President for nomination as commissioned officers of the Regular Corps. A board may consider any newly discovered evidence relating to the physical, professional, or personal qualifications of any candidate examined for appointment. Upon recommendation of such board after review of such evidence, the Surgeon General, with the approval of the Secretary, may correct the rating of a candidate or may qualify or disqualify a candidate. The placing of a candidate's name on a merit roll shall give no assurance of an appointment. A merit roll shall expire when a new merit roll in the same profession or specialty within a profession and grade has been established, but no merit roll shall continue in effect longer than two years after its approval by the Secretary. Every candidate who has not been nominated by the President for appointment prior to the expiration of a merit roll on which his name appears, shall, unless he requests the opportunity to be reexamined, be rated with the next group of candidates of the same profession or specialty within a profession for appointment in the same grade and shall be given the same rating he had on the expired merit roll. If two candidates who were examined at the same time receive the same numerical rating the elder candidate shall assume relative standing on the merit roll over the younger candidate. If a candidate whose name is being transferred from an expired to a new merit roll has the same numerical rating as a candidate whose name is being placed on the new merit roll for the first time, the former shall assume relative standing on the merit roll over the latter. The name of a candidate may be removed from a merit roll in the event that he refuses an appointment when offered. No candidate's eligibility for appointment shall exceed two years unless he again becomes eligible as the result of another examination.

[21 FR 9806, Dec. 12, 1956, as amended at 24 FR 1790, Mar. 12, 1959]

§21.47 Examination; anticipation of meeting qualifications.

A potential candidate for appointment in any grade in the Regular Corps may be examined within a period of nine months prior to the date upon which it is anticipated that he will qualify for appointment under this subpart. Upon successful completion of the examination, his name will be entered on a merit roll. In the event that his name, in order of relative standing among all candidates, precedes that of fully qualified candidates, his name, for purpose of appointment, shall be passed over in favor of fully qualified candidates until such time as he becomes fully qualified, but in no event shall he otherwise lose his relative standing on the merit roll, except as provided in §21.46. If the candidate fails to qualify for appointment at the time that it was anticipated that he would qualify, his name shall be removed from the merit roll.

PROVISIONS APPLICABLE ONLY TO RESERVE CORPS

§ 21.51 Appointment of officers having specialized training or experience in administration and management.

The Surgeon General may recommend for original appointment in the Reserve Corps candidates who have specialized training or experience in administration and management relating to the functions of the Service. All such candidates shall be subject to the same eligibility requirements for original appointment as are applicable to other candidates, except that such a candidate may substitute experience in administration or management for the requirement of professional training or experience.

§ 21.52 Waiver of entrance qualifications for original appointment in time of war or national emergency.

If, in time of war or national emergency proclaimed by the President, the Secretary determines that there is need for commissioned personnel to meet the needs of the Service, other than persons eligible for examination for original appointment under the eligibility requirements prescribed in this subpart, he may prescribe standards of eligibility for examination for the original appointment of officers in the Reserve Corps without regard to such eligibility requirements. Such standards shall, however, authorize the examination only of candidates with specialized experience in administration or management or candidates with training or experience in fields relating to public health. The permanent grade of an officer who becomes eligible for examination for appointment pursuant to such standards and who becomes eligible for appointment after passage of an examination shall be limited to the junior assistant or the assistant grade, except that, if upon examination a candidate is found to be exceptionally qualified for the performance of highly specialized duties with the Service pursuant to § 21.55, he may be recommended for appointment to any grade up to and including the director grade.

[21 FR 9806, Dec. 12, 1956, as amended at 24 FR 1790, Mar. 12, 1959]

§ 21.53 Examination.

The examination of candidates for original appointment as officers to any grade in the Reserve Corps shall consist of a review and evaluation of their academic and other education and their training and experience. In the discretion of the Surgeon General the examination of any such candidate may include an oral interview, a written examination, or both.

§ 21.54 Students.

A potential candidate for appointment in the Regular Corps who is pursuing a course of instruction which, upon completion, would qualify him under § 21.25 or § 21.26 for examination for appointment in the junior assistant or assistant grade may be examined for and appointed in the Reserve Corps in the junior assistant grade but shall not be called to extended active duty until the successful completion of such course of instruction, except that: (a) He may be called to active duty for purposes of training for periods not to exceed 120 days during any fiscal year, and (b) those students who have completed at least 3 years of collegiate or professional study leading to the qualifying degree for appointment may be called to active duty for the purpose of completing the requirements of § 21.25(a)(3). An appointment made under this subpart shall be terminated upon the officer's failure to continue a full-time course of study or failure to meet the requirements of § 21.25(a)(3) within 18 months after entering on active duty.

[34 FR 706, Jan. 17, 1969]

§ 21.55 Appointment to higher grades; candidates exceptionally qualified in specialized fields.

Any candidate eligible for examination for appointment in the grade of assistant pursuant to § 21.26 who, upon examination for such purpose, is found

exceptionally qualified for the performance of duties requiring highly specialized training or experience may be recommended for appointment in the Reserve Corps in any grade up to and including the director grade without regard to the additional years of postgraduate training or experience prescribed for grades above the assistant grade.

§21.56 Reappointment.

An officer of the Reserve Corps, after being examined and found qualified for reappointment, may be recommended for reappointment to the same grade in the event that his commission expires before he becomes eligible for reappointment to a higher grade, or may be recommended for reappointment to a higher grade to be effective on or after the date on which he meets the qualifications prescribed in this subpart for original appointment to such higher grade.

§21.57 Examination for reappointment.

The examination of an officer of the Reserve Corps on active duty who is being considered for reappointment in such corps shall consist of a review and evaluation of his record with the Service. The examination of an officer of the Reserve Corps on inactive duty who is being considered for reappointment in such corps shall consist of (a) a review and evaluation of his record with the Service while on active duty, if any, and (b) the record of his training or experience during the period of his inactive duty preceding such examination. In the discretion of the Surgeon General the examination for reappointment of an officer, whether on active or inactive duty, may include an oral interview.

§21.58 Physical examination for reappointment.

Every officer of the Reserve Corps being considered for reappointment shall undergo such physical examination as the Surgeon General may direct. An officer on active duty may be recommended for reappointment unless he is found to have a physical disability which is determined to render him physically unfit to perform the duties of his office under section 402 of the Career Compensation Act of 1949, as amended. An officer may be recommended for promotion only if he meets the physical qualifications for original appointment. If an officer is not available to be physically examined because of circumstances which make it impracticable for the Service to require such examination, he may, in the discretion of the Surgeon General, be reappointed without such examination, but shall be examined as soon thereafter as practicable and his physical qualification or disqualification for continued or future active service shall be determined on the same basis as if the physical examination had been given prior to reappointment.

Subpart C—Involuntary Child and Spousal Support Allotments

AUTHORITY: 37 U.S.C. 101, 15 U.S.C. 1673, 42 U.S.C. 665.

SOURCE: 49 FR 7235, Feb. 24, 1984, unless otherwise noted.

§21.70 Purpose.

Under references 37 U.S.C. 101, 15 U.S.C. 1673, and 42 U.S.C. 665, this subpart provides implementing policies governing involuntary child or child and spousal support allotments, assigns responsibilities, and prescribes procedures.

§21.71 Applicability and scope.

(a) This subpart applies to officers in the Public Health Service Commissioned Corps. The term ''Public Health Service,'' hereinafter shall be referred to as Service.

(b) Its provisions pertain to officers of the Service under a call or order to active duty for a period of six months or more.

§21.72 Definitions.

(a) *Child support.* Periodic payments for the support and maintenance of a child or children, subject to and in accordance with State or local law. This includes, but is not limited to payments to provide for health care, education, recreation, clothing, or to meet

other specific needs of such a child or children.

(b) *Spousal support.* Periodic payments for the support and maintenance of a spouse or former spouse in accordance with State or local law. It includes, but is not limited to, separate maintenance, alimony pendente lite, and maintenance. Spousal support does not include any payment for transfer of property or its value by an individual to his or her spouse or former spouse in compliance with any community property settlement, equitable distribution of property, or other division of property between spouse or former spouse.

(c) *Notice.* A court order, letter, or similar documentation issued by an authorized person, which provides notification that an officer has failed to make periodic support payments under a support order.

(d) *Support order.* Any order providing for child or child and spousal support issued by a court of competent jurisdiction or by administrative procedures established under State law that affords substantially due process and is subject to judicial review. A court of competent jurisdiction includes Indian tribal courts within any State, territory, or possession of the United States and the District of Columbia.

(e) *Authorized person.* (1) Any agent or attorney of any State having in effect a plan approved under part D of title IV of the Social Security Act (42 U.S.C. 651–665), who has the duty or authority to seek recovery of any amounts owed as child or child and spousal support (including, when authorized under a State plan, any official of a political subdivision); and (2) the court which has authority to issue an order against the officer for the support and maintenance of a child, or any agent of such court.

(f) *Active duty.* Full-time duty in the Service, including full-time training duty.

(g) *Legal officer.* Shall be an officer of the Service or employee of the Department who is a lawyer and who has substantial knowledge of the regulations, policies, and procedures relating to the implementation of section 172 of Pub. L. 97–248.

§ 21.73 Policy.

(a) It is the policy of the Department of Health and Human Services to withhold allotments from pay and allowances of commissioned officers on active duty in the Service to make involuntary allotments from pay and allowances as payment of child, or child and spousal, support payments when the officer has failed to make periodic payments under a support order in a total amount equal to the support payable for two months or longer. Failure to make such payments shall be established by notice from an authorized person to the designated official of the Department. Such notice shall specify the name and address of the payee to whom the allotment is payable. The amount of the allotment shall be the amount necessary to comply with the support order including amounts for arrearages as well as for current support. However the amount of the allotment, when added to any other amounts withheld from the officer's pay pursuant to a support order, shall not exceed the limits for involuntary allotments from pay as prescribed in section 303 (b) and (c) of the Consumer Credit Protection Act, 15 U.S.C. 1673. An allotment under this Subpart shall be adjusted or discontinued upon notice from any authorized person.

(b) Notwithstanding the above, no action shall be taken to withhold an allotment from the pay and allowances of any officer until such officer has had an opportunity to consult with a legal officer of the Department to discuss the legal and other factors involved with respect to the officer's support obligation and his or her failure to make payments. The Department shall exercise continuing good faith efforts to arrange such a consultation, but must begin to withhold allotments on the first end-of-month payday after 30 days have elapsed since notice of an opportunity to consult was sent to the officer.

§ 21.74 Responsibilities.

(a) The General Counsel, Office of the Secretary, Department of Health and Human Services, shall be the Designated Official for the Department

and shall provide guidance to the Service regarding administration of the provisions of these regulations.

(b) The Commissioned Personnel Operations Division, Office of Personnel Management, Office of Management, Office of the Assistant Secretary for Health, shall implement the provisions of these regulations.

§21.75 Procedures.

(a) *Service of notice.* (1) An authorized person shall serve on the designated official of the Department a signed notice including:

(i) Full name of the officer;

(ii) Social security number of the officer;

(iii) Duty station location of the officer, if known;

(iv) A statement that support payments are delinquent by an amount at least equal to the amount of support payable for two months;

(v) A photocopy, along with any modifications, of the underlying support order;

(vi) A statement of the amount of arrearages provided for in the court order and the amount which is to be applied each month toward liquidation of the arrearages, if applicable;

(vii) The full name and address of the payee to whom the allotment will be payable;

(viii) Any limitations on the duration of the support allotment.

(2) The service of notice shall be accomplished by certified or registered mail, return receipt requested, or by personal service, upon the appropriate designated official of the Department. The designated official shall note the date and time of receipt on the notice.

(3) Valid service is not accomplished until the notice is received in the office of the designated official.

(4) If the order of a court or duly authorized administrative agency seeks collection of arrearages, the notice must state that the support allotment qualifies for the additional 5 percent in excess of the maximum percentage limitations found in 15 U.S.C. 1673. Supporting evidence must be submitted to the Department establishing that the support order is 12 or more weeks in arrears.

(5) When the information submitted is not sufficient to identify the officer the notice shall be returned directly to the authorized person with an explanation of the deficiency. However, before returning the notice, an attempt should be made to inform the authorized person who caused the notice to be served that it will not be honored unless adequate information is supplied.

(6) Upon proper service of notice of delinquent support payments and together with all required supplementary documents and information, the Service shall identify the officer from whom moneys are due and payable. The pay of the officer shall be reduced by the amount necessary to comply with the support order and liquidate arrearages if any, if provided by order of a court or duly authorized administrative agency. The maximum amount to be alloted under the provision together with any other moneys withheld from the officer for support pursuant to a court order may not exceed:

(i) 50 percent of the officer's disposable earnings for any month when the officer asserts by affidavit or other acceptable evidence that he or she is supporting a spouse or dependent child or both, other than a party in the support order. When the officer submits evidence, copies shall be sent to the authorized person, together with notification that the officer's support claim will be honored. If the support claim is contested by the authorized person, the authorized person may refer it to the appropriate court or other authority for resolution. Pending resolution of a contested support claim, the allotment shall be made but the amount of such allotment may not exceed 50 percent of the officer's disposable earnings;

(ii) 60 percent of the officer's disposable earnings for any month when the officer fails to assert by affidavit or other acceptable evidence, that he or she is supporting a spouse or dependent child or both;

(iii) Regardless of the limitations above, an additional five percent of the officer's disposable earnings shall be withheld when it is stated in the notice that the officer is in arrears in an amount equivalent to 12 or more weeks' support.

(b) *Disposable earnings.* (1) The following moneys, as defined in the U.S. Public Health Service Commissioned Corps Personnel Manual, are subject to inclusion in computation of the officer's disposable earnings:

(i) Basic pay;

(ii) Basic allowances for quarters for officers with dependents and officers without dependents;

(iii) Basic allowance for subsistence;

(iv) Special pay for physicians, dentists, optometrists, and veterinarians;

(v) Hazardous duty pay;

(vi) Flying pay; and

(vii) Family separation allowances (only for officers assigned outside the contiguous United States).

(c) *Exclusions.* The following moneys are excluded from the computation of the officer's disposable earnings. Amounts due from or payable by the United States shall be offset by any amounts:

(1) Owed by the officer to the United States.

(2) Required by law to be deducted from the remuneration or other payment involved including but not limited to:

(i) Amounts withheld from benefits payable under title II of the Social Security Act when the withholding is required by law;

(ii) FICA.

(3) Properly withheld for Federal and State income tax purposes if the withholding of the amounts is authorized or required by law and if amounts withheld are not greater than would be the case if the individual claimed all dependents to which he or she were entitled. The withholding of additional amounts pursuant to 26 U.S.C. 3402(i) may be permitted only when the officer presents evidence of a tax obligation which supports the additional withholding.

(4) Deducted for the Servicemen's Group Life Insurance coverage.

(5) Advances of pay that may be due and payable by the officer in the future.

(d) *Officer Notification.* (1) As soon as possible, but not later than 30 calendar days after the date of receipt of notice, the Commissioned Personnel Operations Division shall send to the officer at his or her duty station, written notice:

(i) That notice has been served, including a copy of the documents submitted;

(ii) Of the maximum limitations set forth, with a request that the officer submit supporting affidavits or other documentation necessary for determining the applicable percentage limitation;

(iii) That by submitting supporting affidavits or other necessary documentation, the officer consents to the disclosure of such information to the party requesting the support allotment;

(iv) Of the amount of percentage that will be deducted if the officer fails to submit the documentation necessary to enable the designated official of the Service to respond to the legal process within the time limits set forth;

(v) That a consultation with a legal officer is authorized and will be provided by the Department. The name, address, and telephone number of the legal officer will be provided;

(vi) That the officer may waive the personal consultation with a legal officer; however if consultation is waived action will be taken to initiate the allotment by the first end-of-month payday after notification is received that the officer has waived his/her consultation;

(vii) That the allotment will be initiated without the officer having received a personal consultation with a legal officer if the legal officer provides documentation that consultation could not be arranged even though good faith attempts to do so had been made; and

(viii) Of the date that the allotment is scheduled to begin.

(2) The Commissioned Personnel Operations Division shall inform the appropriate legal officer of the need for consultation with the officer and shall provide the legal officer with a copy of the notice and other legal documentation served on the designated official.

(3) If possible, the Commissioned Personnel Operations Division shall provide the officer with the following:

(i) A consultation in person with the appropriate legal officer to discuss the legal and other factors involved with

the officer's support obligation and his/her failures to make payment;

(ii) Copies of any other documents submitted with the notice.

(4) The legal officer concerned will confirm in writing to the Commissioned Personnel Operations Division within 30 days of notice that the officer received a consultation concerning the officer's support obligation and the consequences of failure to make payments. The legal officer concerned must advise the Commissioned Personnel Operations Division of the inability to arrange such consultation and the status of continuing efforts to contact the officer.

(e) *Lack of money.* (1) When notice is served and the identified officer is found not to be entitled to any moneys due from or payable by the Department of Health and Human Services, the Commissioned Personnel Operations Division shall return the notice to the authorized person, and advise in writing that no moneys are due from or payable by the Department of Health and Human Services to the named individual.

(2) Where it appears that moneys are only temporarily exhausted or otherwise unavailable, the Commissioned Personnel Operations Division shall advise the authorized person in writing on a timely basis as to why, and for how long, the moneys will be unavailable.

(3) In instances where the officer separates from active duty, the authorized person shall be informed in writing on a timely basis that the allotment is discontinued.

(f) *Effective date of allotment.* Allotments shall be withheld beginning on the first end-of-month payday after the Commissioned Personnel Operations Division is notified that the officer has had a consultation with a legal officer, has waived his/her right to such consultation, or the legal officer has submitted documentation that a consultation with the officer could not be arranged after good faith attempts to do so were made by the legal officer. The Service shall not be required to vary its normal allotment payment cycle to comply with the notice.

(g) *Designated official.* Department of Health and Human Services, General Counsel, Room 5362 North Building, 330 Independence Avenue, SW., Washington, DC 20201.

(Approved by the Office of Management and Budget under control number 0937–0123)

PART 22—PERSONNEL OTHER THAN COMMISSIONED OFFICERS

HANSEN'S DISEASE DUTY BY PERSONNEL OTHER THAN COMMISSIONED OFFICERS

Sec.
22.1 Duty at a station of the Service devoted to the care of Hansen's disease patients; additional pay.

SPECIAL CONSULTANTS

22.3 Appointment of special consultants.
22.5 Leave without pay while on detail.

AUTHORITY: Sec. 208(e) of the Public Health Service Act, 42 U.S.C. 210(e); E.O. 11140, 29 FR 1637.

HANSEN'S DISEASE DUTY BY PERSONNEL OTHER THAN COMMISSIONED OFFICERS

§ 22.1 Duty at a station of the Service devoted to the care of Hansen's disease patients; additional pay.

(a) Non–commissioned officers and other employees of the Service shall not receive any additional compensation by reason of being assigned to any duty requiring intimate contact with persons with Hansen's disease. However, any such officer or employee who was entitled, on January 4, 1986, to receive additional pay by reason of being assigned to full–time duty, for a period of 30 days or more, at a station of the Service devoted to the care of Hansen's disease patients and who continues to be assigned to such duty, shall receive special pay as long as such assignment continues without a break.

(b) Such special pay shall, on any future date, be at an annual dollar level equal to the lower of the levels that would be paid under the following subparagraphs:

(1) 25% of the lowest level of basic pay that he or she has been receiving on any date from January 4, 1986, through that future date;

(2) The amount by which the level of an employee's basic pay plus special pay on January 4, 1986, exceeds the level of that employee's basic pay on that on that future date, except that

the special pay under this subparagraph shall not be less that 12 times the monthly special pay then paid to Commissioned Officers entitled to special pay for duty involving intimate contact with persons who have Hansen's disease. (As of October 24, 1985, that monthly rate was $110.)

(c) An officer or employee may be paid special pay for any pay period, under paragraphs (a) and (b) of this section, only to the extent that it does not cause his or her aggregate pay for that pay period to exceed the biweekly rate of basic pay for Level V of the Executive Schedule. As used in this paragraph, ''aggregate pay'' comprises basic pay, this special pay, and premiums for overtime, nightwork, irregular duty, standby status, and Sunday or holiday work.

[50 FR 43146, Oct. 24, 1985]

SPECIAL CONSULTANTS

§ 22.3 Appointment of special consultants.

(a) When the Public Health Service requires the services of consultants who cannot be obtained when needed through regular Civil Service appointment or under the compensation provisions of the Classification Act of 1949, special consultants to assist and advise in the operations of the Service may be appointed, subject to the provisions of the following paragraphs and in accordance with such instructions as may be issued from time to time by the Secretary of Health and Human Services.

(b) Appointments, pursuant to the provisions of this section, may be made by those officials of the Service to whom authority has been delegated by the Secretary or his designee.

(c) The per diem or other rates of compensation shall be fixed by the appointing officer in accordance with criteria established by the Surgeon General.

(Sec. 208(c), 58 Stat. 686, as amended; 42 U.S.C. 209(e); sec. 207(f), 58 Stat. 686 as amended by 62 Stat. 40; 42 U.S.C. 209(f))

[21 FR 9821, Dec. 12, 1956, as amended at 31 FR 12939, Oct. 5, 1966]

§ 22.5 Leave without pay while on detail.

The Secretary or his delegate may, pursuant to section 214(d) of the Public Health Service Act, 42 U.S.C. 215(d), and with the consent of the officer or employee concerned, arrange, through agreements or otherwise, for a civilian officer or employee of the Public Health Service to be placed on leave without pay for the period of a detail to a State, a subdivision thereof, or a private non-profit institution and be paid by the non-Federal organization. Such an arrangement may be for a period of not to exceed 2 years, but may be extended for additional periods of not to exceed 2 years each.

(Sec. 215, 58 Stat. 690, as amended; 42 U.S.C. 216)

[33 FR 18981, Dec. 20, 1968]

PART 23—NATIONAL HEALTH SERVICE CORPS

Subpart A—Assignment of National Health Service Corps Personnel

Sec.

23.1 To what entities does this regulation apply?
23.2 Definitions.
23.3 What entities are eligible to apply for assignment?
23.4 How must an entity apply for assignment?
23.5 What are the criteria for deciding which applications for assignment will be approved?
23.6 What are the criteria for determining the entities to which National Health Service Corps personnel will be assigned?
23.7 What must an entity agree to do before the assignment is made?
23.8 What operational requirements apply to an entity to which National Health Service Corps personnel are assigned?
23.9 What must an entity to which National Health Service Corps personnel are assigned (i.e., a National Health Service Corps site) charge for the provision of health services by assigned personnel?
23.10 Under what circumstances may a National Health Service Corps site's reimbursement obligation to the Federal Government be waived?
23.11 Under what circumstances may the Secretary sell equipment or other property of the United States used by the National Health Service Corps site?
23.12 Who will supervise and control the assigned personnel?

23.13 What nondiscrimination requirements apply to National Health Service Corps sites?

Subpart B—Private Practice Special Loans for Former Corps Members

23.21 Definitions.
23.22 What is the purpose of a private practice loan?
23.23 Who is eligible to receive a private practice option loan?
23.24 In what amounts are loans made?
23.25 How will interest rates for loans be determined?
23.26 How is the loan repaid?
23.27 What happens if scheduled payments are late?
23.28 What events constitute default?
23.29 What happens in the case of a default?
23.30 May the loan be prepaid?
23.31 May loan payments be postponed or waived?
23.32 What conditions are imposed on the use of the loan funds?
23.33 What security must be given for these loans?
23.34 What other conditions are imposed?
23.35 What criteria are used in making loans?

Subpart C—Private Startup Loans

23.41 What conditions are applicable to loans under this subpart?

AUTHORITY: Secs. 333, 338E(c), and 338C(e)(1), Public Health Service Act. 90 Stat. 2272, as amended, 95 Stat. 905, 97 Stat. 1345 (42 U.S.C. 254f *et seq.*), 95 Stat. 912 (42 U.S.C. 254p(c)), 95 Stat. 910 (42 U.S.C. 254n(e)(1)).

SOURCE: 45 FR 12790, Feb. 27, 1980, unless otherwise noted.

Subpart A—Assignment of National Health Service Corps Personnel

§ 23.1 To what entities does this regulation apply?

This regulation applies to the assignment of National Health Service Corps personnel under section 333 *et seq.* of the Public Health Service Act (42 U.S.C. 254f) to provide health services in or to health manpower shortage areas as designated under section 332 of the Public Health Service Act (42 U.S.C. 254e).

§ 23.2 Definitions.

As used in this subpart:

Act means the Public Health Service Act, as amended.

Assigned National Health Service Corps personnel or *Corps personnel* means health personnel of the Regular and Reserve Corps of the Public Health Service Commissioned Corps and civilian personnel as designated by the Secretary including, but not limited to, physicians, dentists, nurses, and other health professions personnel who are assigned under section 333 of the Act and this regulation.

Health manpower shortage area means the geographic area, the population group, the public or nonprofit private medical facility or any other public facility which has been determined by the Secretary to have a shortage of health manpower under section 332 of the Act and its implementing regulation (42 CFR part 5).

National Health Service Corps site means the entity to which personnel have been assigned under section 333 of the Act and this regulation to provide health services in or to health manpower shortage area.

Nonprofit private entity means as entity which may not lawfully hold or use any part of its net earnings to the benefit of any private shareholder or individual and which does not hold or use its net earnings for that purpose.

Secretary means the Secretary of Health and Human Services and any other officer or employee of that Department to whom the authority involved has been delegated.

§ 23.3 What entities are eligible to apply for assignment?

Any public or nonprofit private entity which is located in a health manpower shortage area, or has a demonstrated interest in the shortage area, may apply for the assignment of National Health Service Corps personnel.

§ 23.4 How must an entity apply for assignment?

(a) An application for the assignment of National Health Service Corps personnel must be submitted to the Secretary by an eligibe applicant in the form and at the time prescribed by the

Secretary.[1] The application must be signed by an individual authorized to act for the applicant and to assume on behalf of the applicant the obligations imposed by law, the Act, this regulation, and any additional conditions of assignment imposed under these authorities.

(b) In addition to other pertinent information required by the Secretary, an application for the assignment of Corps personnel must include—

(1) A description of the applicant's overall organizational structure;

(2) A justification of the request for the assignment of personnel based upon the needs of the health manpower shortage area;

(3) A description of the applicant's financial plan for operating the National Health Service Corps site including a proposed budget, sources of non-Federal support obtained, and the proposed expenditures for obtaining adequate support staff, equipment and supplies;

(4) A list of the proposed fees and discounted fees to be charged for the provision of health services; and

(5) If an entity wishes to request an interest free loan (not to exceed $50,000) under section 335(c) of the Act to assist the applicant in establishing the practice of the assigned National Health Service Corps personnel, a detailed justification of the amount requested must be included.

(c) An application for assignment must include evidence that the applicant has provided a copy of the completed application for review to (1) each health systems agency designated under section 1515 of the Act for the health service area which includes all or part of the health manpower shortage area for which as assignment of National Health Service Corps personnel is sought or (2) if no health systems agency has been designated for such a health service area, to each State health planning and development agency designated under section 1521 of the Act for each State which includes all or part of the health manpower shortage area for which an assignment of National Health Service Corps personnel is sought.

(d) If an application for assignment is filed by an applicant which had previously been assigned National Health Service Corps personnel under an agreement entered into under section 329 of the Act as in effect before October 1, 1977, or under section 334 of the Act, the applicant must provide the information the Secretary considers necessary to make the determinations required by section 333(a)(1)(D) of the Act.

[45 FR 12790, Feb. 27, 1980, as amended at 51 FR 31948, Sept. 8, 1986]

§ 23.5 What are the criteria for deciding which applications for assignment will be approved?

(a) In approving or disapproving an application for assignment of Corps personnel, the Secretary will consider, among other pertinent factors:

(1) The applicant's ability and plans to meet the operational requirements in § 23.8.

(2) The administrative and managerial capability of the applicant.

(3) The soundness of the applicant's financial plan for operating the National Health Service Corps site.

(4) The extent to which community resources will be used in operating the National Health Service Corps site.

(5) Comments received from any designated health systems agency or any designated State health planning and development agency to which an application was submitted for review under § 23.4(c).

(6) Comments received from health professional societies serving the health manpower shortage area.

(b) Special consideration for the assignment of Corps personnel will be given to the entity which is located in a health manpower shortage area over an entity which is not located in a health manpower shortage area but has a demonstrated interest in it.

§ 23.6 What are the criteria for determining the entities to which National Health Service Corps personnel will be assigned?

(a) The Secretary may, upon approving an application for the assignment of personnel and after entering into an

[1] Applications and instructions may be obtained from Regional Offices of the Department of Health and Human Services at the addresses set forth at 45 CFR 5.31(b).

agreement with an applicant under § 23.7, assign National Health Service Corps personnel to provide health services in or to a health manpower shortage area.

(b) In assigning National Health Service Corps personnel to serve in a health manpower shortage area, the Secretary will seek to assign personnel who have those characteristics which will increase the probability of their remaining to serve in the health manpower shortage area upon completion of the period of assignment. In addition, the Secretary will apply a weighted-value system in which the first factor listed below is assigned the greatest weight and the second, and third factors are assigned lesser weights in descending order:

(1) The need of the health manpower shortage area as determined by criteria established under section 332(b) of the Act.

(2) The willingness of individuals, government agencies, or health entities within the health manpower shortage area to cooperate with the National Health Service Corps in providing effective health services.

(3) The comments of health professional societies serving the health manpower shortage area.

[45 FR 12790, Feb. 27, 1980, as amended at 51 FR 31948, Sept. 8, 1986]

§ 23.7 What must an entity agree to do before the assignment is made?

(a) *Requirements.* To carry out the purposes of section 334 of the Act, each National Health Service Corps site must enter into an agreement with the Secretary under which the site agrees to:

(1) Be responsible for charging for health services provided by assigned National Health Service Corps personnel;

(2) Take reasonable action for the collection of the charges for those health services;

(3) Reimburse the United States the sums required under section 334 of the Act; and

(4) Prepare and submit an annual report. The agreement will set forth the period of assignment (not to exceed 4 years), the number and type of Corps personnel to be assigned to the site, and other requirements which the Secretary determines necessary to carry out the purposes of the Act.

(b) *Termination.* An agreement entered into under this section may be terminated by either party on 30-days written notice or modified by mutual consent consistent with section 333 of the Act.

[45 FR 12790, Feb. 27, 1980, as amended at 51 FR 31948, Sept. 8, 1986]

§ 23.8 What operational requirements apply to an entity to which National Health Service Corps personnel are assigned?

Each National Health Service Corps site must:

(a) Operate a health care delivery system within a planned or existing community structure to assure:

(1) The provision of high quality comprehensive health care;

(2) To the extent feasible, full professional health care coverage for the health manpower shortage area;

(3) Continuum of care; and

(4) The availability and accessibility of secondary and tertiary health care (the two more sophisticated levels of health care beyond primary care);

(b) Establish and maintain a patient record system;

(c) Implement a system for maintaining the confidentiality of patient records;

(d) Meet the requirements of applicable fire and safety codes;

(e) Develop, to the extent feasible, linkages with other health care facilities for the provision of services which supplement or complement the services furnished by the assigned Corps personnel;

(f) Operate a quality assurance system which meets the requirements of 42 CFR 51c.303(c) for the establishment and operation of a quality assurance system in a community health center; and

(g) Establish basic data, cost accounting, and management information and reporting systems as prescribed by the Secretary.

§ 23.9 What must an entity to which National Health Service Corps personnel are assigned (i.e., a National Health Service Corps site) charge for the provision of health services by assigned personnel?

(a) Except as provided in paragraph (b) of this section, individuals receiving services from assigned National Health Service Corps personnel must be charged on a fee-for-service or other basis at a rate which is computed to permit recovery of the value of the services and is approved by the Secretary.

(b) In determining whether to approve fees to be charged for health services, the Secretary will consider: The costs to the National Health Service Corps of providing the health services; the costs to the health manpower shortage area for providing the services; and the charges for similar services by other practitioners or facilities in or nearby the health manpower shortage area. However, if assigned National Health Service Corps personnel are providing services within the framework of an established health services delivery system, the Secretary may approve the fees charged under that system without regard to the foregoing factors.

(c)(1) No charge or a nominal charge will be made for health services provided by assigned National Health Service Corps personnel to individuals within the health manpower shortage area with annual incomes at or below the ''CSA Income Poverty Guidelines'' (45 CFR 1060.2). However, no individual will be denied health services based upon inability to pay for the services. Any individual who has an annual income above the ''CSA Income Poverty Guidelines,'' but whose income does not exceed 200 percent of the CSA levels, will receive health services at a nominal charge. However, charges will be made for services to the extent that payment will be made by a third party which is authorized or under legal obligation to pay the charges.

(2) The provisions of this paragraph also apply with respect to services provided by an individual who is fulfilling an NHSC scholarship obligation under section 753 or who received a special grant under section 755.

§ 23.10 Under what circumstances may a National Health Service Corps site's reimbursement obligation to the Federal Government be waived?

(a) The Secretary may waive in whole or in part the reimbursement requirements of section 334(a)(3) of the Act if he determines that:

(1) The National Health Service Corps site is financially unable to meet the reimbursement requirements or that compliance with those requirements will unreasonably limit the ability of the site to adequately support the provision of services by assigned Corps personnel. In making these determinations, the Secretary will consider—

(i) The costs necessary to adequately support the health services provided by the assigned National Health Service Corps personnel and the income and financial resources available to meet the costs;

(ii) The ability of the applicant to obtain credit from suppliers, lending institutions, private organizations and individuals;

(iii) The need of the health manpower shortage area for health services; and

(iv) The extent to which the National Health Service Corps site utilizes health professions personnel.

(2) A significant percentage of the individuals who are located in the health manpower shortage area and are receiving the health services of the assigned National Health Service Corps personnel are elderly, living in poverty, or have other characteristics which indicate an inability to pay. For purposes of this section, ''elderly'' means persons 65 years or older and the ''CSA Income Poverty Guidelines'' will be used as the standard for determining whether individuals are living in poverty. Other characteristics indicating inability to pay include, but are not to be limited to, the ratio of unemployment in the health manpower shortage area and the area's cost-of-living index.

(b) The Secretary may waive in whole or in part the reimbursement requirements of section 334(f)(1) of the Act if he or she determines that the National Health Service Corps site is a small health center (as defined by section 334(f)(5) of the Act) that needs all

or part of the amount otherwise payable to—

(1) Expand or improve its provision of health services;

(2) Increase the number of individuals served;

(3) Renovate or modernize facilities for its provision of health services;

(4) Improve the administration of its health service programs; or

(5) Establish a financial reserve to assure its ability to continue providing health services;

(c) Where the Secretary determines that a National Health Service Corps site is eligible for a waiver under paragraph (a) (1) or (2) of this section. the Secretary may waive the application of the reimbursement requirements of section 334(a)(3) of the Act and apply the reimbursement requirements of section 334(f)(1) of the Act. The Secretary may waive in whole or in part the reimbursement requirements of section 334(f)(1) for such a site if he or she determines that the National Health Service Corps site meets the requirements of paragraph (a)(1) of this section. Funds retained by a National Health Service Corps site as a result of such waiver must be used for the purposes set forth in paragraphs (b) (1) through (5) of this section.

(d) Requests for a prospective or retrospective waiver must be made at the time and in the manner and contain the documentation prescribed by the Secretary.

[45 FR 12790, Feb. 27, 1980, as amended at 51 FR 31948, Sept. 8, 1986]

§ 23.11 Under what circumstances may the Secretary sell equipment or other property of the United States used by the National Health Service Corps site?

(a) Upon expiration of the assignment of all Corps personnel to a health manpower shortage area, the Secretary may sell equipment and other property of the United States used by the assigned personnel. The equipment may be sold at the fair market value or less than the fair market value to any entity providing health services in or to a health manpower shortage area if the Secretary determines that an entity is unable to pay the fair market value. In determining whether an entity is financially unable to purchase equipment or property at fair market value, the Secretary will consider (1) the present financial resources of the entity available to purchase the equipment or property based upon its current liabilities, and (2) the entity's ability to obtain the funds necessary to purchase the equipment or property. However, the Secretary will not sell the equipment or property for less than fair market value to a profitmaking organization unless the organization gives reasonable assurance that it will use the equipment or property to provide health services in or to the health manpower shortage area.

(b) The Secretary will give priority to sales to an entity providing reasonable assurance that it will use the equipment or property for the purpose of retaining within the health manpower shortage area National Health Service Corps personnel who have completed their assignments.

§ 23.12 Who will supervise and control the assigned personnel?

Assigned National Health Service Corps personnel will at all times remain under the direct supervision and control of the Secretary. Observance of institutional rules and regulations by the assigned personnel is a mere incident of the performance of their Federal functions and does not alter their direct professional and administrative responsibility to the Secretary.

§ 23.13 What nondiscrimination requirements apply to National Health Service Corps sites?

National Health Service Corps sites are advised that in addition to complying with the terms and conditions of this regulation, the following laws and regulations are applicable—

(a) Title VI of the Civil Rights Act of 1964 (43 U.S.C. 2000d *et seq.*) and its implementing regulations, 45 CFR part 80 (prohibiting discrimination in federally assisted programs on the grounds of race, color, or national origin); and

(b) Section 504 of the Rehabilitation Act of 1973 (29 U.S.C. 794) and its implementing regulations, 45 CFR part 84 (prohibiting discrimination in federally assisted programs on the basis of handicap).

(c) The Age Discrimination Act of 1975 (42 U.S.C. 6101 *et seq.)* and its implementing regulations, 45 CFR part 91 (prohibiting nondiscrimination on the basis of age in HHS programs or activities receiving Federal financial assistance).

[45 FR 12790, Feb. 27, 1980, as amended at 49 FR 38109, Sept. 27, 1984]

Subpart B—Private Practice Special Loans for Former Corps Members

SOURCE: 51 FR 31948, Sept. 8, 1986, unless otherwise noted.

§ 23.21 Definitions.

As used in this subpart, terms have the same meanings as those given to them in subpart A, § 23.2. In addition:

National Health Service Corps scholarship recipient means an individual receiving a scholarship under the Public Health and National Health Service Corps Scholarship Training Program authorized by section 225 of the Act as in effect on September 30, 1977, and repealed on October 1, 1977, or a scholarship under the NHSC Scholarship Program authorized by section 338A of the Act, formerly section 751 of the Act.

Private full-time clinical practice means the provision of ambulatory clinical services for a minimum of 40 hours per week for at least 45 weeks a year, including the provision of hospital coverage services appropriate to meet the needs of patients treated and to assure continuity of care. The 40 hours per week must be performed in no less than 4 days per week with no more than 12 hours of work being performed in any 24-hour period.

§ 23.22 What is the purpose of a private practice loan?

The purpose of the private practice loan is to assist NHSC scholarship recipients in establishing private full-time clinical practices in designated health manpower shortage areas.

§ 23.23 Who is eligible to receive a private practice option loan?

(a) Eligibility for loans is limited to NHSC scholarship recipients who have completed at least 2 years of their service obligations at a NHSC site. NHSC scholarship recipients remain eligible for loans under this subpart for 1 year after they have completed their service obligations at a NHSC site.

(b) Scholarship recipients who are in arrears 31 days or more on a Health Professions Student Loan (42 U.S.C. 294m *et seq.*), Health Education Assistance Loan (42 U.S.C. 294, *et seq.*), Nursing Student Loan (42 U.S.C. 297a *et seq.*), or any other Federally guaranteed or direct student loan are ineligible for this loan program.

(c) NHSC scholarship recipients who have received loans under either this subpart or subpart C of this part are ineligible for loans under this subpart.

§ 23.24 In what amounts are loans made?

The Secretary may make loans either in the amount of $12,500, if the recipient agrees to practice in accordance with the loan agreement for a period of at least 1 year but less than 2 years, or $25,000, if the recipient agrees to practice in accordance with the loan agreement for a period of at least 2 years.

§ 23.25 How will interest rates for loans be determined?

Interest will be charged at the Treasury Current Value of Funds (CVF) rate in effect on April 1 immediately preceding the date on which the loan is approved and will accrue from the date the loan funds are disbursed to the borrower.

§ 23.26 How is the loan repaid?

Payments shall be made at monthly intervals, beginning 1 month from the date of the loan disbursement, in accordance with the repayment schedule established by the Secretary and set forth in the loan agreement. Only interest payments are required during the first 2 years. The repayment schedule may be extended in accordance with § 23.31(a).

§ 23.27 What happens if scheduled payments are late?

(a) Failure to make full payment of principal and/or interest when due will subject the borrower to the assessment of administrative costs and penalty

charges, in addition to the regular interest charge, in accordance with 45 CFR part 30.

(b) Failure to make full payment of principal and/or interest when due may result in the Secretary placing the borrower in default of the loan. See § 23.28(a).

§ 23.28 What events constitute default?

The following events will constitute defaults of the loan agreement:

(a) Failure to make full payment of principal and/or interest when due, and continuance of that failure for a period of sixty (60) days, or a lesser period of time if the Secretary determines that more immediate action is necessary in order to protect the interests of the Government.

(b) Failure to perform or observe any of the terms and conditions of the loan agreement and continuance of that failure for a period of sixty (60) days.

(c) The institution of bankruptcy proceedings, either voluntary or involuntary, under any State or Federal statute, which may adversely affect the borrower's ability to comply with the terms and conditions of the agreement or the promissory note.

§ 23.29 What happens in the case of a default?

(a) In the event of default, the Secretary may declare the entire amount owed (including principal, accrued interest and any applicable charges) immediately due and payable. Collection of the amount owed will be made in accordance with 45 CFR part 30.

(b) The borrower is not entitled to written notice of any default and the failure to deliver written notice of default in no way affects the Secretary's right to declare the loan in default and take any appropriate action under the loan agreement or the promissory note.

(c) The failure of the Secretary to exercise any remedy available under law or regulation shall in no event be construed as a waiver of his or her right to exercise that remedy if any subsequent or continued default or breach occurs.

§ 23.30 May the loan be prepaid?

The borrower shall have the option to prepay the balance of any part of the loan, together with accrued interest, at any time without prepayment penalty.

§ 23.31 May loan payments be postponed or waived?

(a) Whenever health, economic, or other personal problems affect the borrower's ability to make scheduled payments on the loan, the Secretary may allow the borrower an extension of time or allow the borrower to make smaller payments than were previously scheduled; however, interest will continue to accrue at the rate specified in the promissory note until the loan is repaid in full. The loan must be fully repaid within 10 years after it was made.

(b) No waiver, full or partial, of repayment of the loan will be granted; except that the obligation of a borrower to repay a loan shall be cancelled upon the death or total and permanent disability of the borrower, as determined by the Secretary.

(c) In order to make a determination under paragraph (a) or (b) of this section, the Secretary may require supporting medical, financial, or other documentation.

§ 23.32 What conditions are imposed on the use of the loan funds?

(a) The borrower must use the total amount of the loan to purchase or lease, or both, equipment and supplies, to hire authorized personnel to assist in providing health services and/or to renovate facilities for use in providing health services in his or her private practice. Equipment and supplies purchased and/or leased, personnel hired and facilities renovated shall be limited to the items requested in the loan application and approved by the Secretary.

(b) The borrower must expend the loan funds within 6 months from the date of the loan or within such other time as the Secretary may approve. Documentation of the expenditure of funds must be furnished to the Secretary upon request.

§ 23.33 What security must be given for these loans?

The Secretary may require the borrower to pledge to the Secretary a security interest in specified collateral.

§ 23.34 What other conditions are imposed?

(a) The borrower must sign a loan agreement describing the loan and practice conditions, and a promissory note agreeing to repay the loan plus interest.

(b) The borrower must agree to enter into private full-time clinical practice in a HMSA for the time period specified in the loan agreement.

(c) The borrower must accept assignment, for the time period specified in the loan agreement, under section 1842(b)(3)(B)(ii) of the Social Security Act as full payment for all services for which payment may be made under part B of title XVIII of that Act.

(d) The borrower must enter into an appropriate agreement, for the time period specified in the loan agreement, with the State agency which administers the State plan for medical assistance under title XIX of the Social Security Act to provide services to individuals entitled to medical assistance under the plan.

(e) During the time period specified in the loan agreement, the borrower must provide health services to individuals at the usual and customary rate prevailing in the HMSA in which services are provided; however, services must be provided at no charge or at a nominal charge to those persons unable to pay for these services.

(f) The borrower must keep and preserve all documents, including bills, receipts, checks, and correspondence which affect the operation of the private practice and the expenditure of loan funds for the period of the practice obligation specified in the loan agreement plus 3 years. Accounts will be maintained under one of the accounting principles identified by the Secretary in the loan agreement.

(g) The borrower must provide the Secretary and the Controller General of the United States, or their representatives, access during normal working hours to accounts, documents, and records for the purposes of audit or evaluation; and must permit the Secretary or his or her representative to inspect the private practice at reasonable times during the period of the practice obligation specified in the loan agreement plus 3 years. All information as to personal facts and circumstances about recipients of services shall be held confidential, and shall not be divulged without the individual's consent except as may be required by law or as may be necessary to provide medical service to the individual or to provide for medical or fiscal audits by the Secretary or his or her designee with appropriate safeguards for confidentiality of records.

(h) For the entire period of loan repayment, the borrower must acquire, maintain, and when requested, must provide the Secretary with copies of policies of insurance on equipment and supplies in amounts adequate to reasonably protect the borrower from risk, including public liability, fire, theft, and worker's compensation.

(i) If the Secretary retains a security interest pursuant to § 23.33, the borrower must keep and preserve all documents which affect that security interest for the period of the loan repayment and allow the Secretary or his or her designee access, during normal working hours, to those documents.

(j) The borrower must maintain the loan proceeds in a separate account from his or her other transactions and must agree to draw upon this account and expend the loan proceeds in accordance with § 23.32.

(k) The Secretary may impose other conditions which he or she deems appropriate under law or regulation to protect the Government's interests.

§ 23.35 What criteria are used in making loans?

Approval of loan applications will be based on the criteria set forth below:

(a) The need in the HMSA for the applicant's health profession as determined under section 332 of the Act;

(b) The applicant's need for the loan funds; and

(c) The comments from State or local health professional societies on the appropriateness of the applicant's intended private practice; and

(d) The applicant's credit worthiness and projected financial ability to repay the loan.

Subpart C—Private Startup Loans

§23.41 What conditions are applicable to loans under this subpart?

The regulations set out in subpart B of this part are fully applicable to loans awarded under section 338C(e)(1) of the Public Health Service Act, except as noted below;

(a) *Eligibility.* (1) In lieu of §23.23(a), the following applies to loans made under this subpart:

(i) Eligibility for loans is limited to NHSC scholarship recipients who plan to enter private practice and have not begun fulfilling their scholarship service obligation or are currently fulfilling their scholarship service obligation under section 338B of the Act and have completed less than 2 years of this obligation.

(2) In lieu of §23.23(c), the following applies to loans made under this subpart:

(i) NHSC scholarship recipients who have received loans under either this subpart or subpart B of this part are ineligible for loans under this subpart.

(b) *Loan amounts.* (1) In lieu of §23.24, the following applies to loans made under this subpart:

(i) The Secretary may make loans in the amount of $12,500 if the recipient agrees to practice in accordance with the loan agreement for a period of at least 1 year but less than 2 years or the remaining period of the borrower's NHSC scholarship service obligation, whichever is shorter.

(ii) The Secretary may make loans in the amount of $25,000 if the recipient agrees to practice in accordance with the loan agreement for a period of at least 2 years or the remaining period of the borrower's NHSC scholarship service obligation, whichever is shorter.

(c) *Use of funds.* (1) In lieu of §23.32(a), the following applies to loans made under this subpart:

(i) The borrower must use the total amount of the loan only to purchase or lease, or both, the equipment and supplies needed for providing health services in his or her private practice. Equipment and supplies purchased and/or leased shall be limited to the items requested in the loan application and approved by the Secretary.

[51 FR 31950, Sept. 8, 1986]

PART 24—SENIOR BIOMEDICAL RESEARCH SERVICE

Sec.
24.1 Establishment.
24.2 Allocation.
24.3 Policy Board.
24.4 Eligibility.
24.5 Peer review.
24.6 Pay and compensation.
24.7 Performance appraisal system.
24.8 Applicability of provisions of Title 5, U.S. Code.
24.9 Removal from the Service.
24.10 Reporting.

AUTHORITY: Section 228(g) of the Public Health Service Act; 5 U.S.C. 301.

SOURCE: 61 FR 6557, Feb. 21, 1996, unless otherwise noted.

§24.1 Establishment.

There is established in the Public Health Service (PHS) a Senior Biomedical Research Service (SBRS) consisting of members the maximum number of which is prescribed by law.

§24.2 Allocation.

(a) The Secretary, within the number authorized in the PHS Act, shall determine the number of SBRS slots to be allocated to each participating Operating Division.

(b) The SBRS Policy Board may advise the Secretary to make adjustments to the allocation at any time.

(c) The majority of the SBRS allocation is to be reserved for recruitment. The remaining SBRS allocation may be used for the retention of current employees.

(d) SBRS slots will be used judiciously, resulting in SBRS appointments only where other senior-level appointing authorities are not sufficient to recruit or retain scientific talent.

(e) The Secretary will ensure that SBRS slots are used in support of high priority programs authorized by Congress and which directly support the research goals and priorities of the Department.

§24.3 Policy Board.

The Secretary or his/her designee shall establish an SBRS Policy Board to serve in an advisory capacity, recommending SBRS allocations among the participating Operating Divisions,

reviewing the operations of the SBRS and ensuring consistent application of regulations, policies, and procedural guidelines, and recommending changes to the Secretary as necessary. Membership, to the extent possible, will include SBRS eligibles nominated by their respective Operating Divisions, will be weighted in proportion to Operating Divisions' SBRS allocations, and will include representation from the Office of the Secretary. The Secretary or his/her designee will select the board membership and the Chair.

§ 24.4 Eligibility.

To be eligible for appointment to the Service an individual must have a doctoral-level degree in biomedicine or a related field and must meet the qualification standards prescribed by the U.S. Office of Personnel Management for appointment to a position at GS–15 of the General Schedule. In addition, the individual must be outstanding in the field of biomedical research or clinical research evaluation. Appointment to the Service will be made only to individuals actively engaged in either biomedical research or clinical research evaluation.

(a) Outstanding in the field of biomedical research means an individual who is actively engaged in peer-reviewed original biomedical research and whose work in this area is considered by his or her peers to be outstanding. In order to meet the eligibility criteria, an individual must have conducted original peer-reviewed biomedical research resulting in major accomplishments reflected by a steady and current record of highly cited publications in peer-reviewed journals of high stature. In addition, the individual should be the recipient of major prizes and awards (such as visiting professorships and named lectureships) in recognition of original contributions to research.

(b) Outstanding in the field of clinical research evaluation means that an individual is actively engaged in clinical research evaluation and is considered by his or her peers to be outstanding. In order to meet the eligibility criteria, an individual, by force of his or her own technical expertise, must be in a position to shape the course of drug or device evaluation or exert a similar influence on the PHS handling of other agents that may affect the public health. The individual would normally have dealt with complex, precedent-setting evaluation issues that involved significant scientific controversy, had far reaching implications for clinical research or resulted in a widespread economic effect in the health-care delivery system. In addition, the individual should have been involved in the development of scientific or regulatory guidelines for clinical research and been the recipient of invitations to speak at or to chair major national or international meetings and symposia.

§ 24.5 Peer review.

An individual may not be considered for appointment into the SBRS unless his/her qualifications have been reviewed by a PHS peer review committee and the committee has recommended appointment to the Service.

§ 24.6 Pay and compensation.

The SBRS is an ungraded system, with a single, flexible pay range to include all members.

(a) Pay of the members of the Service shall be determined by the Secretary or his/her designee.

(b) The pay of a member of the Service shall be not less than the minimum rate payable for GS–15 of the General Schedule and shall not exceed:

(1) The rate payable for level I of the Executive Schedule unless a higher rate of pay is expressly approved on an individual basis by the President, pursuant to 5 U.S.C. 5377(d)(2), or

(2) The rate payable for level II of the Executive Schedule unless a higher rate of pay is expressly approved on an individual basis by the Secretary.

(c) While the full pay range will be used, individual pay at the higher end of the range will be used only as needed to recognize individual scientific value and as necessary to recruit or retain an exceptionally well-qualified scientist.

(d) The following factors will be used in establishing appropriate pay rates for individual members:

(1) Impact of the individual on the scientific field;

(2) Recognition of the individual by the scientific community;

(3) Originality of the individual's ideas/work products;

(4) Specific ''clinical'' or highly technical skills of the individual which are of benefit to the agency and which are in addition to requirements of the basic scientific assignment;

(5) The individual's earnings and monetary benefits;

(6) Salary surveys of similar skills in pertinent labor markets; and

(7) Other relevant factors.

(e) Annual adjustments to pay rates may be made effective on the first day of the first pay period on or after January 1 of each calendar year. The rate of such adjustments will be at the discretion of the Secretary or his/her designee, except that the minimum rate payable in the SBRS will be increased to the amount of the minimum rate of the GS–15 of the General Schedule.

(f) Other pay adjustments will be made on an individual basis by the Secretary or his/her designee.

(g) Except as provided in paragraph (h) of this section, new appointees to the Service, who are not covered by the Civil Service Retirement System, will be covered by the Federal Employees Retirement System.

(h) Upon the request of a member who performed service in the employ of an institution of higher education immediately prior to his appointment as a member of the Service, and retains the right to make contributions to the retirement system of such institution, the Department of Health and Human Services may contribute an amount not to exceed ten percent per annum of the member's basic pay to such institution's retirement system on behalf of such member. A member who participates in this program shall not be covered by any retirement system established for employees of the United States under title 5, United States Code.

§24.7 Performance appraisal system.

The members of the Service shall be subject to a performance appraisal system which shall be designed to encourage excellence in performance and shall provide for a periodic and systematic appraisal of the performance of the members.

§24.8 Applicability of provisions of Title 5, U.S. Code.

(a) Appointments to the Service shall be made without regard to the provisions of title 5, U.S. Code regarding appointments.

(b) Members of the Service shall not be covered by the following provisions of title 5, U.S. Code:

(1) Subchapter I of Chapter 35 (relating to retention preference in the event of reduction in force);

(2) Chapter 43, Performance Appraisal (and performance-based actions);

(3) Chapter 51 (relating to classification);

(4) Subchapter III of Chapter 53, The General Schedule; and

(5) Chapter 75, Adverse Actions.

(c) Other provisions of Title 5 will be applied as administratively determined by the Secretary or his/her designee.

§24.9 Removal from the Service.

(a) A member of the Service may be subject to disciplinary action, including removal from the Service, for substandard performance of duty as a member of the service, for misconduct, for reasons of national security or for other reasons as determined by the Secretary.

(b) A member for whom disciplinary action is proposed is entitled to:

(1) Written notice of the proposed action and the basis therefor;

(2) A reasonable opportunity to answer the notice of proposed action both orally and in writing;

(3) The right to be represented by an attorney or other representative in making such answer; and

(4) A written decision on the proposal.

(c) The decision may be made by an official with delegated authority to take such action, but in no case may the official be at a level below the head of the Operating Division where the member is assigned.

(d) A member who is separated from the Service involuntarily and without cause and who, immediately prior to his appointment to the Service, was a career appointee in the civil service or the Senior Executive Service, may be

appointed to a position in the competitive civil service at grade GS–15 of the General Schedule. Such an appointment may be made by the Secretary or his/her designee without regard to the provisions of title 5, U.S. Code regarding appointments in the civil service.

(e) A member who is separated from the Service involuntarily and without cause and who, immediately prior to appointment to the Service, was not a career appointee in the civil service or the Senior Executive Service may be appointed to a position in the excepted civil service at grade GS–15 of the General Schedule for a period not to exceed two years.

(f) There shall be no right to further review of the final decision on a disciplinary action. At his/her discretion, the Secretary may review an action taken under this section and may reduce, suspend, or overrule the action taken.

(g) A member of the Service may be removed from the Service for such other reasons as may be prescribed by the Secretary.

§ 24.10 Reporting.

For each quarter of the first year of implementation and annually thereafter, participating Operating Divisions shall maintain reports on the operation of the SBRS. At a minimum, these reports should include the number of appointees, the source of those appointees, their earnings immediately prior to appointment, and their SBRS pay at appointment.

SUBCHAPTER C—MEDICAL CARE AND EXAMINATIONS

PART 31—MEDICAL CARE FOR CERTAIN PERSONNEL OF THE COAST GUARD, NATIONAL OCEAN SURVEY, PUBLIC HEALTH SERVICE, AND FORMER LIGHTHOUSE SERVICE

DEFINITIONS

Sec.
31.1 Meaning of terms.

PROVISIONS APPLICABLE TO COAST GUARD, NATIONAL OCEAN SURVEY AND PUBLIC HEALTH SERVICE

31.2 Persons entitled to treatment.
31.3 Use of Service facilities.
31.4 Use of other than Service facilities.
31.5 Application for treatment; active duty personnel.
31.6 Personnel absent without leave.
31.7 Continuance of medical relief after loss of status.
31.8 Retired personnel; extent of treatment.
31.9 Dependent members of families; treatment.
31.10 Dependent members of families; use of Service facilities.

PROVISIONS APPLICABLE TO PERSONNEL OF FORMER LIGHTHOUSE SERVICE

31.11 Persons entitled to treatment.
31.12 Use of Service facilities.
31.13 Use of other than Service facilities.
31.14 Application for treatment; active duty personnel.
31.15 Continuance of medical relief after loss of status.
31.16 Retired personnel; extent of treatment.

SOURCE: 21 FR 9821, Dec. 12, 1956, unless otherwise noted.

DEFINITIONS

§ 31.1 Meaning of terms.

As used in this part, the term:

(a) *Act* means the Public Health Service Act, approved July 1, 1944, 58 Stat. 682, as amended.

(b) *Service* means the Public Health Service.

(c) *Surgeon General* means the Surgeon General of the Public Health Service.

(d) *Medical relief station* means a first-, second-, third-, or fourth-class station of the Service.

(e) *First-class stations* means a hospital operated by the Service.

(f) *Second-class station* means a medical relief facility, other than a hospital of the Service, under the charge of a commissioned officer.

(g) *Third-class station* means a medical relief facility, other than a hospital of the Service, under the charge of a medical officer or employee of the Service other than a commissioned officer.

(h) *Fourth-class station* means a medical relief facility designated by the Surgeon General, other than a first-, second-, or third-class station.

(i) *Designated physician* means a physician holding an appointment to act regularly for the Service for a class or classes of specified beneficiaries at a place where there is no medical relief station.

(j) *Designated dentist* means a dentist holding an appointment to perform dental service for the Service for a class or classes of specified beneficiaries.

(k) *Active duty* means active duty status as distinguished from being on inactive status or retired and includes periods of authorized leave or liberty.

(l) *Dependent members of families* in the case of male personnel means the lawful wife, the unmarried children (including stepchildren or adopted children) under 21 years of age, and the father or mother if in fact dependent upon such son for his or her chief support; and in the case of female personnel, the unmarried children (including stepchildren or adopted children) under 21 years of age if their father is dead or they are in fact dependent on such mother for their chief support, the father or mother if in fact dependent upon such daughter for his or her chief support, and the husband if in fact dependent upon such wife for his chief support: *Provided, however,* That in the case of members of the Women's Reserve of the Coast Guard the husbands of such members shall not be considered dependents.

(Sec. 215, 58 Stat. 690, as amended; 42 U.S.C. 216)

PROVISIONS APPLICABLE TO COAST GUARD, NATIONAL OCEAN SURVEY AND PUBLIC HEALTH SERVICE

§ 31.2 Persons entitled to treatment.

To the extent and under the circumstances prescribed in §§ 31.2 to 31.10, the following persons shall be entitled to medical, surgical, and dental treatment and hospitalization by the Service:

(a) *Coast Guard.* (1) Commissioned officers, chief warrant officers, warrant officers, cadets, and enlisted personnel of the Regular Coast Guard, including those on shore duty and those on detached duty, whether on active duty or retired;

(2) Regular members of the Coast Guard Reserve when on active duty or when retired for disability;

(3) Temporary members of the Coast Guard Reserve when on active duty or in case of physical injury incurred or sickness or disease contracted while performing active Coast Guard duty;

(4) Members of the Women's Reserve of the Coast Guard when on active duty or when retired for disability;

(5) Members of the Coast Guard Auxiliary in case of physical injury incurred or sickness or disease contracted while performing active Coast Guard duty.

(b) *National Ocean Survey.* Commissioned officers, ships' officers, and members of the crews of vessels of the National Ocean Survey, including those on shore duty and those on detached duty whether on active duty or retired.

(c) *Public Health Service.* (1) Commissioned officers of the Regular Corps of the Service, whether on active duty or retired;

(2) Commissioned officers of the Reserve Corps of the Service when on active duty or when retired for disability.

(Sec. 326, 58 Stat. 697, as amended 42 U.S.C. 253)

§ 31.3 Use of Service facilities.

Except as otherwise provided in §§ 31.3 to 31.10, the persons specified in § 31.2 shall be entitled to medical, surgical, and dental treatment and hospitalization only at medical relief stations and by designated physicians and designated dentists, and the cost of services procured elsewhere shall not be borne by the Service.

(Sec. 326, 58 Stat. 697, as amended 42 U.S.C. 253)

§ 31.4 Use of other than Service facilities.

(a) When a person specified in § 31.2 who is on active duty requires immediate medical, surgical, or dental treatment or hospitalization and the urgency of the situation does not permit treatment at a medical relief station or by a designated physician or designated dentist, an officer of the same service as the patient may arrange for treatment or hospitalization at the expense of the Service.

(b) When the circumstances are such that an officer of the same service as the patient is not available to make the necessary arrangements, the treatment or hospitalization may be obtained by or on behalf of the patient at the expense of the Service.

(c) In every case of treatment or hospitalization as defined in paragraph (b) of this section, the responsible superior officer of the patient shall be notified as promptly as possible and a full report shall be submitted by such officer to the Surgeon General through appropriate official channels. As soon as practicable, unless the interests of the patient or the Government require otherwise, treatment or hospitalization shall be continued at a medical relief station or by a designated physician or designated dentist or at another appropriate Federal medical facility.

(d) When the necessary medical relief cannot be obtained from a medical relief station or a designated physician or designated dentist, preference shall be given to other Federal medical facilities when reasonably available and when conditions permit.

(e) Vouchers on proper forms covering expenses for treatment or hospitalization under the circumstances specified in paragraphs (a) and (b) of this section shall be forwarded to the Surgeon General through appropriate official channels. Each such voucher shall be accompanied by or contain a statement of the facts necessitating the treatment or hospitalization. Unreasonable charges for emergency

treatment or hospitalization will not be allowed.

(f) Expenses for consultants or special services, or for dental treatment other than emergency measures to relieve pain, shall not be allowed except when authorized in advance by the headquarters of the Service or, in extraordinary cases, when subsequently approved by such headquarters upon receipt of report and satisfactory explanation as to the necessity and urgency therefor.

(Sec. 326, 58 Stat. 697, as amended; 42 U.S.C. 253)

§31.5 Application for treatment; active duty personnel.

(a) An applicant for medical relief who is on active duty shall furnish a certificate identifying him. Such certificate, in the case of Coast Guard personnel, shall be signed by an officer of the Coast Guard, and in the case of National Ocean Survey personnel, shall be signed by an officer of the National Ocean Survey. Commissioned officers of any of the services mentioned in §31.2 and officers in charge of units may sign their own certificates. In an emergency, the officer in charge of a medical relief station, or a designated physician or designated dentist, may accept other evidence of status satisfactory to him.

(b) A temporary member of the Coast Guard Reserve except when on active duty or a member of the Coast Guard Auxiliary shall, when applying for medical relief, furnish a statement signed by a responsible superior officer setting forth the facts and circumstances giving rise to the need for medical relief. In emergencies, such statement shall be furnished promptly after the member has received the immediately required care and treatment. Such statement shall be presumptive evidence of the facts stated, but if investigation indicates that the injury, sickness, or disease was not incurred or contracted in the manner stated, further treatment may be denied.

(Sec. 326, 58 Stat. 697, as amended; 42 U.S.C. 253)

§31.6 Personnel absent without leave.

No member of any of the services enumerated in §31.2 shall be entitled when absent without leave to medical relief except at a medical relief station or by a designated physician or designated dentist.

(Sec. 326, 58 Stat. 697, as amended; 42 U.S.C. 253)

§31.7 Continuance of medical relief after loss of status.

If a member is separated from any of the services enumerated in §31.2, except persons specified in §31.2(a) (3) and (5) who shall be entitled to treatment after separation under the conditions set forth in such paragraphs, while undergoing treatment by the Service, his treatment shall be discontinued immediately unless the physician in charge determines that the condition of the patient does not permit interruption of treatment, in which case the treatment shall be discontinued as soon as practicable and the condition of the patient permits. At that time he shall be discharged from treatment and shall not thereafter be afforded medical relief by the Service by reason of his previous service.

(Sec. 326, 58 Stat. 697, as amended; 42 U.S.C. 253)

§31.8 Retired personnel; extent of treatment.

(a) A retired member of the Coast Guard, National Ocean Survey, or Public Health Service specified in §31.2 shall be entitled to medical, surgical, and dental treatment and hospitalization at medical relief stations of the first-, second-, and third-class, upon presentation of satisfactory evidence of his status.

(b) Elective medical or surgical treatment requiring hospitalization shall be furnished only at hospitals operated by the Service.

(c) Dental treatment shall be furnished to the extent of available facilities only at medical relief stations where full-time dental officers are on duty; at other medical relief stations the dental treatment shall be limited

to emergency measures necessary to relieve pain.

(Sec. 326, 58 Stat. 697, as amended; 42 U.S.C. 253)

§ 31.9 Dependent members of families; treatment.

To the extent and under the circumstances prescribed in this part, the Service shall provide medical advice and outpatient treatment at first-, second-, and third-class medical relief stations and hospitalization at first-class stations to the dependent members of families of the following persons:

(a) *Coast Guard.* Commissioned officers, chief warrant officers, warrant officers, cadets, and enlisted personnel of the Regular Coast Guard, including those on shore duty and those on detached duty, whether on active duty or retired; and regular members of the United States Coast Guard Reserve and members of the Women's Reserve of the Coast Guard, when on active duty or when retired for disability.

(b) *National Ocean Survey.* Commissioned officers, ships' officers, and members of the crews of vessels of the United States National Ocean Survey, including those on shore duty and those on detached duty, whether on active duty or retired.

(c) *Public Health Service.* Commissioned officers of the Regular Corps of the Service, whether on active duty or retired, and commissioned officers of the Reserve Corps of the Service when on active duty or when retired for disability.

(Sec. 326, 58 Stat. 697, as amended; 42 U.S.C. 253)

§ 31.10 Dependent members of families; use of Service facilities.

(a) A dependent member of the family of any person specified in § 31.9 shall, upon presentation of satisfactory evidence of such status, be entitled to medical advice and out-patient treatment at first-, second-, and third-class medical relief stations and hospitalization at first-class stations if suitable accommodations are available therein and if the condition of the dependent is such as to require hospitalization, both as determined by the medical officer in charge.

(b) Hospitalization at first-class stations shall be at a per diem cost to the officer, enlisted person, member of a crew or other person concerned. Such cost shall be at such uniform rate as may be prescribed from time to time by the President for the hospitalization of dependents of naval and Marine Corps personnel at any naval hospital.

(c) Hospitalization at first-class stations and out-patient treatment at first-, second-, and third-class stations may include such services and supplies as, in the judgment of the medical officer in charge, are necessary for reasonable and adequate treatment.

(d) Dental treatment shall be furnished to the extent of available facilities only at medical relief stations where full-time officers are on duty.

(Sec. 326, 58 Stat. 697, as amended; 42 U.S.C. 253)

PROVISIONS APPLICABLE TO PERSONNEL OF FORMER LIGHTHOUSE SERVICE

§ 31.11 Persons entitled to treatment.

To the extent and under the circumstances prescribed in this part, the following persons shall be entitled to medical, surgical, and dental treatment and hospitalization by the Service: Lightkeepers, assistant lightkeepers, and officers and crews of vessels of the former Lighthouse Service, including any such persons who subsequent to June 30, 1939, have involuntarily been assigned to other civilian duty in the Coast Guard, who were entitled to medical relief at hospitals and other stations of the Service prior to July 1, 1944, and who are now or hereafter on active duty or who have been or may hereafter be retired under the provisions of section 6 of the act of June 20, 1918, as amended (33 U.S.C. 763).

(Sec. 610(b), 58 Stat. 714, as amended; 33 U.S.C. 763c)

§ 31.12 Use of Service facilities.

Except as otherwise provided herein, the persons specified in § 31.11 shall be entitled to medical, surgical, and dental treatment and hospitalization only at medical relief stations and by designated physicians and designated dentists, and the cost of services procured

elsewhere shall not be borne by the Service.

(Sec. 610(b), 58 Stat. 714, as amended; 33 U.S.C. 763c)

§31.13 Use of other than Service facilities.

(a) When a person specified in §31.11 who is on active duty requires immediate medical, surgical, or dental treatment or hospitalization and the urgency of the situation does not permit treatment at a medical relief station or by a designated physician or designated dentist, an officer or other appropriate supervisory official of the Coast Guard may arrange for treatment or hospitalization.

(b) In every such case of treatment or hospitalization, a full report thereof shall be submitted to the Surgeon General through Coast Guard headquarters. As soon as practicable, unless the interests of the patient or the Government require otherwise, treatment or hospitalization shall be continued at a medical relief station or by a designated physician or designated dentist or at another appropriate Federal medical facility.

(c) When the necessary medical relief cannot be obtained from a medical relief station or a designated physician or designated dentist, preference shall be given to other Federal medical facilities when reasonably available and when conditions permit.

(d) Vouchers on proper forms covering expenses for treatment or hospitalization under the circumstances specified in paragraph (a) of this section shall be forwarded to the Surgeon General through Coast Guard headquarters. Each such voucher shall be accompanied by or contain a statement of the facts necessitating the treatment or hospitalization. Unreasonable charges for emergency treatment or hospitalization will not be allowed.

(e) Expenses for consultants or special services, or for dental treatment other than emergency measures to relieve pain, shall not be allowed except when authorized in advance by the headquarters of the Service or, in extraordinary cases, when subsequently approved by such headquarters upon receipt of report and satisfactory explanation as to the necessity and urgency therefor.

(Sec. 610(b), 58 Stat. 714 as amended; 33 U.S.C. 763c)

§31.14 Application for treatment; active duty personnel.

An applicant for medical relief who is on active duty shall furnish a certificate identifying him. Such certificate shall be signed by an officer or other appropriate supervisory official of the Coast Guard. In an emergency, the officer in charge of a medical relief station, or a designated physician or designated dentist, may accept other evidence of status satisfactory to him.

(Sec. 610(b), 58 Stat. 714 as amended; 33 U.S.C. 763c)

§31.15 Continuance of medical relief after loss of status.

If a person is separated while undergoing treatment by the Service, his treatment shall be discontinued immediately unless the physician or dentist in charge determines that the condition of the patient does not permit interruption of treatment, in which case the treatment shall be discontinued as soon as practicable and the condition of the patient permits. At that time he shall be discharged from treatment and shall not thereafter be afforded medical relief by the Service by reason of his previous service.

(Sec. 610(b), 58 Stat. 714, as amended; 33 U.S.C. 763c)

§31.16 Retired personnel; extent of treatment.

(a) Any retired person specified in §31.11 shall be entitled to medical, surgical, and dental treatment and hospitalization at medical relief stations of the first, second, and third class, upon presentation of satisfactory evidence of his status.

(b) Elective medical or surgical treatment requiring hospitalization shall be furnished only at hospitals operated by the Service.

(c) Dental treatment shall be furnished to the extent of available facilities only at medical relief stations where full-time dental officers are on duty; at other medical relief stations the dental treatment shall be limited

to emergency measures necessary to relieve pain.

(Sec. 610(b), 58 Stat. 714, as amended; 33 U.S.C. 763c)

PART 32—MEDICAL CARE FOR PERSONS WITH HANSEN'S DISEASE AND OTHER PERSONS IN EMERGENCIES

DEFINITIONS

Sec.
32.1 Meaning of terms.

BENEFICIARIES

32.6 Persons eligible.

PERSONS WITH HANSEN'S DISEASE

32.86 Admissions to Service facilities.
32.87 Confirmation of diagnosis.
32.88 Examinations and treatment.
32.89 Discharge.
32.90 Notification to health authorities regarding discharged patients.
32.91 Purchase of services for Hansen's disease patients.

NONBENEFICIARIES: TEMPORARY TREATMENT IN EMERGENCY

32.111 Conditions and extent of treatment; charges.

AUTHORITY: Secs. 320, 321 and 322(b), Public Health Service Act (42 U.S.C. 247e, 248 and 249(b)).

SOURCE: 40 FR 25816, June 19, 1975, unless otherwise noted.

DEFINITIONS

§ 32.1 Meaning of terms.

All terms not defined herein shall have the same meaning as given them in the Act.

(a) *Act* means the Public Health Service Act, approved July 1, 1944, 58 Stat. 682, as amended;

(b) *Service* means the Public Health Service;

(c) *Secretary* means the Secretary of Health and Human Services and any other officer or employee of the Department of Health and Human Services to whom the authority involved may have been delegated.

(d) *Authorizing official* means Service officers or employees duly designated by the Director, Bureau of Health Care Delivery and Assistance, to authorize and provide care and treatment to beneficiaries at Service expense.

[40 FR 25816, June 19, 1975, as amended at 48 FR 10318, Mar. 11, 1983]

BENEFICIARIES

§ 32.6 Persons eligible.

(a) Under this part the following persons are entitled to care and treatment by the Service as hereinafter prescribed:

(1) Persons afflicted with Hansen's disease; and

(2) Non-beneficiaries for temporary treatment and care in cases of emergency.

(b) Separate regulations govern: (1) The medical care of certain personnel, and their dependents, of the Coast Guard, National Oceanic and Atmospheric Administration, and Public Health Service (see part 31 of this chapter);

(2) Physical and mental examination of aliens (see part 34 of this chapter); and

(3) Medical care for Native Americans (see part 36 of this chapter).

[48 FR 10318, Mar. 11, 1983]

PERSONS WITH HANSEN'S DISEASE

§ 32.86 Admissions to Service facilities.

Any person with Hansen's disease who presents himself for care or treatment or who is referred to the Service by the proper health authority of any State, Territory, or the District of Columbia shall be received into the Service hospital at Carville, Louisiana, or into any other hospital of the Service which has been designated by the Secretary as being suitable for the accommodation of persons with Hansen's disease.

§ 32.87 Confirmation of diagnosis.

At the earliest practicable date, after the arrival of a patient at the Service hospital at Carville, Louisiana, or at another hospital of the Service the medical staff shall confirm or disprove the diagnosis of Hansen's disease. If the diagnosis of Hansen's disease is confirmed, the patient shall be provided appropriate inpatient or outpatient

treatment. If the diagnosis is not confirmed, the patient shall be discharged.

[40 FR 25816, June 19, 1975; 40 FR 36774, Aug. 22, 1975]

§32.88 Examinations and treatment.

Patients will be provided necessary clinical examinations which may be required for the diagnosis of primary or secondary conditions, and such treatment as may be prescribed.

§32.89 Discharge.

Patients with Hansen's disease will be discharged when, in the opinion of the medical staff of the hospital, optimum hospital benefits have been received.

§32.90 Notification to health authorities regarding discharged patients.

Upon the discharge of a patient the medical officer in charge shall give notification of such discharge to the appropriate health officer of the State, Territory, or other jurisdiction in which the discharged patient is to reside. The notification shall also set forth the clinical findings and other essential facts necessary to be known by the health officer relative to such discharged patient.

§32.91 Purchase of services for Hansen's disease patients.

Hansen's disease patients being treated on either an inpatient or outpatient basis at a hospital or clinic facility of the Service, other than the National Center for Hansen's Disease (Carville, Louisiana), may, at the sole discretion of the Secretary and subject to available appropriations, be provided care for the treatment of Hansen's disease at the expense of the Service upon closure or transfer of such hospital or clinic pursuant to section 987 of the Omnibus Budget Reconciliation Act of 1981 (Pub. L. 97–35). Payment will only be made for care arranged for by an authorizing official of the Service as defined in §32.1(f) of this part.

[46 FR 51918, Oct. 23, 1981]

NONBENEFICIARIES: TEMPORARY TREATMENT IN EMERGENCY

§32.111 Conditions and extent of treatment; charges.

(a) Persons not entitled to treatment by the Service may be provided temporary care and treatment at medical care facilities of the Service in case of emergency as an act of humanity.

(b) Persons referred to in paragraph (a) of this section who, as determined by the officer in charge of the Service facility, are able to defray the cost of their care and treatment shall be charged for such care and treatment at the following rates (which shall be deemed to constitute the entire charge in each instance): In the case of hospitalization, at the current interdepartmental reciprocal per diem rate; and, in the case of outpatient treatment, at rates established by the Secretary.

PART 34—MEDICAL EXAMINATION OF ALIENS

Sec.
34.1 Applicability.
34.2 Definitions.
34.3 Scope of examinations.
34.4 Medical notifications.
34.5 Postponement of medical examination.
34.6 Applicability of Foreign Quarantine Regulations.
34.7 Medical and other care; death.
34.8 Reexamination; convening of review boards; expert witnesses; reports.

AUTHORITY: 42 U.S.C. 216, 249, 252; 8 U.S.C. 1182, 1224, 1226; sec. 601 of Pub. L. 101–649.

§34.1 Applicability.

The provisions of this part shall apply to the medical examination of:

(a) Aliens applying for a visa at an embassy or consulate of the United States;

(b) Aliens arriving in the United States;

(c) Aliens required by the INS to have a medical examination in connection with determination of their admissibility into the United States; and

(d) Aliens applying for adjustment status.

[56 FR 25001, May 31, 1991]

§ 34.2 Definitions.

As used in this part, terms shall have the following meanings:

(a) *CDC.* Centers for Disease Control, Public Health Service, U.S. Department of Health and Human Services.

(b) *Communicable disease of public health significance.* Any of the following diseases:

(1) Chancroid.

(2) Gonorrhea.

(3) Granuloma inguinale.

(4) Human immunodeficiency virus (HIV) infection.

(5) Leprosy, infectious.

(6) Lymphogranuloma venereum.

(7) Syphilis, infectious stage.

(8) Tuberculosis, active.

(c) *Civil surgeon.* A physician, with not less than 4 years' professional experience, selected by the District Director of INS to conduct medical examinations of aliens in the United States who are applying for adjustment of status to permanent residence or who are required by the INS to have a medical examination.

(d) *Class A medical notification.* Medical notification of:

(1) A communicable disease of public health significance;

(2)(i) A physical or mental disorder and behavior associated with the disorder that may pose, or has posed, a threat to the property, safety, or welfare of the alien or others;

(ii) A history of a physical or mental disorder and behavior associated with the disorder, which behavior has posed a threat to the property, safety, or welfare of the alien or others and which behavior is likely to recur or lead to other harmful behavior; or

(3) Drug abuse or addiction.

(e) *Class B medical notification.* Medical notification of a physical or mental abnormality, disease, or disability serious in degree or permanent in nature amounting to a substantial departure from normal well-being.

(f) *Director.* The Director of the Centers for Disease Control.

(g) *Drug abuse.* The non-medical use of a substance listed in section 202 of the Controlled Substances Act, as amended (21 U.S.C. 802) which has not necessarily resulted in physical or psychological dependence.

(h) *Drug addiction.* The non-medical use of a substance listed in section 202 of the Controlled Substances Act, as amended (21 U.S.C. 802) which has resulted in physical or psychological dependence.

(i) *INS.* Immigration and Naturalization Service, U.S. Department of Justice.

(j) *Medical examiner.* A panel physician, civil surgeon, or other physician designated by the Director to perform medical examinations of aliens.

(k) *Medical hold document.* A document issued to the INS by a quarantine inspector of the Public Health Service at a port of entry which defers the inspection for admission until the cause of the medical hold is resolved.

(l) *Medical notification.* A document issued to a consular authority or the INS by a medical examiner, certifying the presence or absence of:

(1) A communicable disease of public health significance;

(2)(i) A physical or mental disorder and behavior associated with the disorder that may pose, or has posed, a threat to the property, safety, or welfare of the alien or others;

(ii) A history of a physical or mental disorder and behavior associated with the disorder, which behavior has posed a threat to the property, safety, or welfare of the alien or others and which behavior is likely to recur or lead to other harmful behavior;

(3) Drug abuse or addiction; or

(4) Any other physical abnormality, disease, or disability serious in degree or permanent in nature amounting to a substantial departure from normal well-being.

(m) *Medical officer.* A physician of the Public Health Service Commissioned Corps assigned by the Director to conduct physical and mental examinations of aliens.

(n) *Mental disorder.* A currently accepted psychiatric diagnosis, as defined by the Diagnostic and Statistical Manual of Mental Disorders published by the American Psychiatric Association, or by other authoritative sources.

(o) *Panel physician.* A physician selected by a United States embassy or consulate to conduct medical examinations of aliens applying for visas.

(p) *Physical disorder.* A currently accepted medical diagnosis, as defined by the Manual of the International Classification of Diseases, Injuries, and Causes of Death published by the World Health Organization, or by other authoritative sources.

[21 FR 9829, Dec. 12, 1956, as amended at 52 FR 32543, Aug. 28, 1987; 56 FR 25001, May 31, 1991]

§ 34.3 Scope of examinations.

(a) *General.* In performing examinations, medical examiners shall consider those matters that relate to:

(1) A communicable disease of public health significance;

(2)(i) A physical or mental disorder and behavior associated with the disorder that may pose, or has posed, a threat to the property, safety, or welfare of the alien or others;

(ii) A history of a physical or mental disorder and behavior associated with the disorder, which behavior has posed a threat to the property, safety, or welfare of the alien or others and which behavior is likely to recur or lead to other harmful behavior;

(3) Drug abuse or addiction; and

(4) Any other physical abnormality, disease, or disability serious in degree or permanent in nature amounting to a substantial departure from normal well-being.

The scope of the examination shall include any laboratory or additional studies that are deemed necessary, either as a result of the physical examination or pertinent information elicited from the alien's medical history, for the examining physician to reach a conclusion about the presence or absence of a physical or mental abnormality, disease, or disability.

(b) *Persons subject to requirement for chest X-ray examination and serologic testing.* (1) Except as provided in paragraph (b)(1)(v) of this section, a chest X-ray examination, serologic testing for syphilis and serologic testing for HIV of persons 15 years of age and older shall be required as part of the examination of:

(i) Applicants for immigrant visas;

(ii) Students, exchange visitors, and other applicants for a nonimmigrant visa who are required by a consular authority to have a medical examination;

(iii) Aliens outside the United States who apply for refugee status;

(iv) Applicants in the United States who apply for adjustment of status under the immigration statute and regulations;

(v) *Exceptions.* Neither a chest X-ray examination nor serologic testing for syphilis and HIV shall be required if the alien is under the age of 15. Provided, a tuberculin skin test shall be required if there is evidence of contact with a person known to have tuberculosis or other reason to suspect tuberculosis, and a chest X-ray examination shall be required in the event of a positive tuberculin reaction, and serologic testing where there is reason to suspect infection with syphilis or HIV. Additional exceptions to the requirement for a chest X-ray examination may be authorized for good cause upon application approved by the Director.

(2) *Tuberculin skin test examination.* (i) All aliens 2 years of age or older in the United States who apply for adjustment of status to permanent residents, under the immigration laws and regulations, or other aliens in the United States who are required by the INS to have a medical examination in connection with a determination of their admissibility, shall be required to have a tuberculin skin test. Exceptions to this requirement may be authorized for good cause upon application approved by the Director. In the event of a positive tuberculin reaction, a chest X-ray examination shall be required. If the chest radiograph is consistent with tuberculosis, the alien shall be referred to the local health authority for evaluation. Evidence of this evaluation shall be provided to the civil surgeon before a medical notification may be issued.

(ii) Aliens less than 2 years old shall be required to have a tuberculin skin test if there is evidence of contact with a person known to have tuberculosis or other reason to suspect tuberculosis. In the event of a positive tuberculin reaction, a chest X-ray examination shall be required. If the chest radiograph is consistent with tuberculosis, the alien shall be referred to the local health authority for evaluation. Evidence of this evaluation shall be provided to the

civil surgeon before a medical notification may be issued.

(3) *Sputum smear examination.* All aliens subject to the chest X-ray examination requirement and for whom the radiograph shows an abnormality consistent with pulmonary tuberculosis shall be required to have a sputum smear examination for acid-fast bacilli.

(4) *How and where performed.* All chest X-ray films used in medical examinations performed under the regulations in this part shall be large enough to encompass the entire chest (approximately 14 by 17 inches; 35.6×43.2 cm.). Serologic testing for HIV shall be a sensitive and specific test, confirmed when positive by a test such as the Western blot test or an equally reliable test. For aliens examined abroad, the serologic testing for HIV must be completed abroad, except that the Attorney General after consultation with the Secretary of State and the Secretary of Health and Human Services may in emergency circumstances permit serologic testing of refugees for HIV to be completed in the United States.

(5) *Chest X-ray, laboratory, and treatment reports.* The chest X-ray reading and serologic test results for syphilis and HIV shall be included in the medical notification. When the medical examiner's conclusions are based on a study of more than one chest X-ray film, the medical notification shall include at least a summary statement of findings of the earlier films, followed by a complete reading of the last film, and dates and details of any laboratory tests and treatment for tuberculosis.

(c) *Procedure for transmitting records.* For aliens issued immigrant visas, the medical notification and chest X-ray film, if any, shall be placed in a separate envelope which shall be sealed and attached to the alien's visa in such a manner as to be readily detached at the U.S. port of entry. When more than one chest X-ray film is used as a basis for the examiner's conclusions, all films shall be included.

(d) *Failure to present records.* When a determination of admissibility is to be made at the U.S. port of entry, a medical hold document shall be issued pending completion of any necessary examination procedures. A medical hold document may be issued for aliens who:

(1) Are not in possession of a valid medical notification, if required;

(2) Have a medical notification which is incomplete;

(3) Have a medical notification which is not written in English;

(4) Are suspected to have an excludable medical condition.

(e) The Attorney General, after consultation with the Secretary of State and the Secretary of Health and Human Services, may in emergency circumstances permit the medical examination of refugees to be completed in the United States.

(f) All medical examinations shall be carried out in accordance with such technical instructions for physicians conducting the medical examination of aliens as may be issued by the Director. Copies of such technical instructions are available upon request to the Director, Division of Quarantine, Mailstop E03, CDC, Atlanta GA 30333.

[56 FR 25002, May 31, 1991]

§ 34.4 Medical notifications.

(a) Medical examiners shall issue medical notifications of their findings of the presence or absence of Class A or Class B medical conditions. The presence of such condition must have been clearly established.

(b) *Class A medical notifications.* (1) The medical examiner shall report his/her findings to the consular officer or the INS by Class A medical notification which lists the specific condition for which the alien may be excluded, if an alien is found to have:

(i) A communicable disease of public health significance;

(ii)(A) A physical or mental disorder, and behavior associated with the disorder that may pose, or has posed, a threat to the property, safety, or welfare of the alien or others; or

(B) A history of a physical or mental disorder and behavior associated with the disorder, which behavior has posed a threat to the property, safety, or welfare of the alien or others and which behavior is likely to recur or lead to other harmful behavior;

(iii) Drug abuse or addition.

Provided, however, That a Class A medical notification of a physical or mental disorder, and behavior associated with that disorder that may pose, or has posed, a threat to the property, safety, or welfare of the alien or others, shall in no case be issued with respect to an alien having only mental shortcomings due to ignorance, or suffering only from a condition attributable to remediable physical causes or of a temporary nature, caused by a toxin, medically prescribed drug, or disease.

(2) The medical notification shall state the nature and extent of the abnormality; the degree to which the alien is incapable of normal physical activity; and the extent to which the condition is remediable. The medical examiner shall indicate the likelihood, that because of the condition, the applicant will require extensive medical care or institutionalization.

(c) *Class B medical notifications.* (1) If an alien is found to have a physical or mental abnormality, disease, or disability serious in degree or permanent in nature amounting to a substantial departure from normal well-being, the medical examiner shall report his/her findings to the consular or INS officer by Class B medical notification which lists the specific conditions found by the medical examiner. Provided, however, that a Class B medical notification shall in no case be issued with respect to an alien having only mental shortcomings due to ignorance, or suffering only from a condition attributable to remediable physical causes or of a temporary nature, caused by a toxin, medically prescribed drug, or disease.

(2) The medical notification shall state the nature and extent of the abnormality, the degree to which the alien is incapable of normal physical activity, and the extent to which the condition is remediable. The medical examiner shall indicate the likelihood, that because of the condition, the applicant will require extensive medical care or institutionalization.

(d) *Other medical notifications.* If as a result of the medical examination, the medical examiner does not find a Class A or Class B condition in an alien, the medical examiner shall so indicate on the medical notification form and shall report his findings to the consular or INS officer.

[56 FR 25003, May 31, 1991]

§ 34.5 Postponement of medical examination.

Whenever, upon an examination, the medical examiner is unable to determine the physical or mental condition of an alien, completion of the medical examination shall be postponed for such observation and further examination of the alien as may be reasonably necessary to determine his/her physical or mental condition. The examination shall be postponed for aliens who have an acute infectious disease until the condition is resolved. The alien shall be referred for medical care as necessary.

[56 FR 25003, May 31, 1991]

§ 34.6 Applicability of Foreign Quarantine Regulations.

Aliens arriving at a port of the United States shall be subject to the applicable provisions of 42 CFR part 71, Foreign Quarantine, with respect to examination and quarantine measures.

[56 FR 25003, May 31, 1991]

§ 34.7 Medical and other care; death.

(a) An alien detained by or in the custody of the INS may be provided medical, surgical, psychiatric, or dental care by the Public Health Service through interagency agreements under which the INS shall reimburse the Public Health Service. Aliens found to be in need of emergency care in the course of medical examination shall be treated to the extent deemed practical by the attending physician and if considered to be in need of further care, may be referred to the INS along with the physician's recommendations concerning such further care.

(b) In case of the death of an alien, the body shall be delivered to the consular or immigration authority concerned. If such death occurs in the United States, or in a territory or possession thereof, public burial shall be provided upon request of the INS and subject to its agreement to pay the

burial expenses. Autopsies shall not be performed unless approved by the INS.

[56 FR 25003, May 31, 1991]

§ 34.8 Reexamination; convening of review boards; expert witnesses; reports.

(a) The Director shall convene a board of medical officers to reexamine an alien:

(1) Upon the request of the INS for a reexamination by such a board; or

(2) Upon an appeal to the INS by an alien who, having received a medical examination in connection with the determination of admissiblity to the United States (including examination on arrival and adjustment of status as provided in the immigration laws and regulations) has been certified for a Class A condition.

(b) For boards convened to reexamine aliens certified as:

(1) Having a communicable disease of public health significance, the board shall consist of three medical officers, at least one of whom is experienced in the diagnosis and treatment of the communicable disease for which medical notification has been made, and the decision of the majority of the board shall prevail;

(2)(i) Having a physical or mental disorder and behavior associated with the disorder that may pose, or has posed, a threat to the property, safety, or welfare of the alien or others; or

(ii) Having a history of a physical or mental disorder and behavior associated with the disorder, which behavior has posed a threat to the property, safety, or welfare of the alien or others and which behavior is likely to recur or lead to other harmful behavior; or

(iii) Being a drug abuser or addict;

(3) In circumstances covered by paragraph (b)(2) of this section, the board shall consist of three medical officers, at least one of whom shall be a board certified psychiatrist, and the decision of the majority of the board shall prevail.

(c) Reexamination shall include:

(1) Review of all records submitted by the alien, other witnesses, or the board;

(2) Use of any laboratory or additional studies which are deemed clinically necessary as a result of the physical examination or pertinent information elicited from the alien's medical history;

(3) Consideration of statements regarding the alien's physical or mental condition made by a physician after his/her examination of the alien; and

(4) An independent physical or psychiatric examination of the alien performed by the board, at the board's option.

(d) An alien who is to be reexamined shall be notified of the time and place of his/her reexamination not less than 5 days prior thereto.

(e) The alien, at his/her own cost and expense, may introduce as witnesses before the board such physicians or medical experts as the board may in its discretion permit; provided that the alien shall be permitted to introduce at least one expert medical witness. If any witnesses offered are not permitted by the board to testify, the record of the proceedings shall show the reason for the denial of permission.

(f) Witnesses before the board shall be given a reasonable opportunity to examine the medical notification and other records involved in the reexamination and to present all relevant and material evidence orally or in writing until such time as the proceedings are declared by the board to be closed. During the course of the hearing the alien's attorney or representative shall be permitted to examine the alien and he/she, or the alien, shall be permitted to examine any witnesses offered in the alien's behalf and to cross-examine any witnesses called by the board. If the alien does not have an attorney or representative, the board shall assist the alien in the presentation of his/her case to the end that all of the material and relevant facts may be considered.

(g) The findings and conclusions of the board shall be based on its medical examination of the alien, if any, and on the evidence presented and made a part of the record of its proceedings.

(h) The board shall report its findings and conclusions to the INS, and shall also give prompt notice thereof to the alien if his/her reexamination has been based on his/her appeal. The board's report to the INS shall specifically affirm, modify, or reject the findings and

conclusions of prior examining medical officers.

(i) The board shall issue its medical notification in accordance with the applicable provisions of this part if it finds that an alien it has reexamined has a Class A or Class B condition.

(j) If the board finds that an alien it has reexamined does not have a Class A or Class B condition, it shall issue its medical notification in accordance with the applicable provisions of this part.

(k) After submission of its report, the board shall not be reconvened, nor shall a new board be convened, in connection with the same application for admission or for adjustment of status, except upon the express authorization of the Director.

[56 FR 25004, May 31, 1991]

PART 35—HOSPITAL AND STATION MANAGEMENT

Subpart A—General

Sec.
35.1 Hospital and station rules.
35.2 Compliance with hospital rules.
35.3 Noncompliance; deprivation of privileges.
35.4 Noncompliance; discharge or transfer.
35.5 Entitlement to care after discharge or transfer by reason of noncompliance.
35.6 Admissions; determination of eligibility for care.
35.7 Admissions; designation of person to be notified.
35.8 Safekeeping of money and effects; withdrawals.
35.9 Disposition of money and effects left by other than deceased patients.
35.10 Destruction of effects dangerous to health.
35.11 Clinical records; confidential.
35.12 Solicitation of legal business prohibited.
35.13 Entry for negotiation of release or settlement.
35.14 Solicitation of legal business; negotiation of release or settlement; assistance prohibited.
35.15 Consent to operative procedures.
35.16 Autopsies and other post-mortem operations.
35.17 Fees and charges for copying, certification, search of records and related services.

Subpart B—Transfer of Patients

35.21 Authorization of transfer.
35.22 Attendants.

Subpart C—Disposition of Articles Produced by Patients

35.31 Retention by patients.
35.32 Board of appraisers.
35.33 Sale; prices; deposit of proceeds.
35.34 Resale.
35.35 Unsalable articles.

Subpart D—Disposal of Money and Effects of Deceased Patients

35.41 Inventory.
35.42 Notice upon death.
35.43 Delivery only upon filing claim; forms; procedure.
35.44 Delivery to legal representative; to other claimants if value is $1,000 or less.
35.45 Disposition of effects; exceptions.
35.46 Conflicting claims.
35.47 Disposition of Government checks.
35.48 Deposit of unclaimed money; sale of unclaimed effects and deposit of proceeds.
35.49 Sale of unclaimed effects; procedures.
35.50 Disposition of unsold effects.
35.51 Manner of delivery; costs, receipts.
35.52 Delivery of possession only; title unaffected.

Subpart E—Contributions for the Benefit of Patients

35.61 Applicability.
35.62 Acceptance of contributions.
35.63 Report of and accounting for contributions.
35.64 Donors.
35.65 Acceptable personal property.
35.66 Expenditure of cash contributions.

AUTHORITY: Sec. 215, 58 Stat. 690, as amended; 42 U.S.C. 216, sec. 321, 53 Stat. 695, as amended; 42 U.S.C. 248, unless otherwise noted.

SOURCE: 21 FR 9830, Dec. 12, 1956, unless otherwise noted.

Subpart A—General

§35.1 Hospital and station rules.

The officer in charge of a station or hospital of the Service is authorized to adopt such rules and issue such instructions, not inconsistent with the regulations in this part and other provisions of law, as he deems necessary for the efficient operation of the station or hospital and for the proper and humane care and treatment of all patients therein. All general rules governing the conduct and privileges of patients, and of members of the public

while on the premises, shall be posted in prominent places.

§ 35.2 Compliance with hospital rules.

All patients and visitors in stations and hospitals of the Service are expected to comply with the rules and instructions issued under the authority of the officer in charge.

§ 35.3 Noncompliance; deprivation of privileges.

Any patient who wilfully fails or refuses to comply with rules or instructions of a hospital or station or with regulations of the Service, may, by the direction of the officer in charge, be deprived of recreational or other privileges accorded patients. Any visitor who wilfully fails or refuses to comply with any such rules, instructions, or regulations may, by direction of the officer in charge, be denied visiting privileges.

§ 35.4 Noncompliance; discharge or transfer.

(a) If the officer in charge finds, upon investigation, that a patient other than a leprosy patient, by willful and persistent failure or refusal to comply with such rules, instructions, or regulations is seriously impeding the course of his own care and treatment, or that of other patients, he may (1) discharge the patient, or (2) if the patient is not a voluntary patient, arrange for his transfer to the custody of the authority responsible for his admission to the station or hospital. No patient shall be discharged or transferred on account of noncompliance if to do so would seriously endanger his life or health, nor shall any patient be discharged if his failure to comply is due, in the opinion of the officer in charge, to a mental disease or disorder.

(b) If the discharge or transfer of a patient is likely to endanger the health of persons other than the patient or officers or employees of the station or hospital, the officer in charge shall give advance notice to appropriate State, county, or municipal authorities of the discharge or transfer.

§ 35.5 Entitlement to care after discharge or transfer by reason of noncompliance.

No person otherwise entitled to care, treatment, or hospitalization at Service facilities, or in other facilities at the expense of the Service, shall be denied such care or treatment by reason of his prior discharge or transfer from any such facility under the provisions of § 35.4.

§ 35.6 Admissions; determination of eligibility for care.

Except as may otherwise be provided for specific classes of patients by the regulations of this chapter, the officer in charge of the station or hospital to which application is made is authorized to determine the eligibility of applicants, as beneficiaries of the Service, for care and for treatment. Such determinations shall be subject to review by the chief of the division of the Service responsible for administration of the station or hospital concerned upon referral made by the officer in charge in doubtful cases or upon appeal made by an applicant who has been denied care or treatment.

§ 35.7 Admissions; designation of person to be notified.

Every in-patient, at the time of admission to the hospital or station or as soon thereafter as practicable, shall be requested to designate a person or persons to be notified in case of emergency.

§ 35.8 Safekeeping of money and effects; withdrawals.

(a) A place for the safekeeping of money and effects of patients shall be provided at each station or hospital, and an itemized receipt therefor shall be furnished to the patient and to any other person who places money or effects therein for the benefit of the patient.

(b) Money and effects may be withdrawn only by or on behalf of the patient, by his legally appointed representative authorized to receive or dispose of his property (including the money and effects in the custody of the station or hospital), or by a person who is authorized, under the law of the

State in which the station or hospital is located, to receive or dispose of the patient's money and effects. In any case in which the officer in charge has had actual notice of the appointment of a legal representative, withdrawals may be made only by such representative or in accordance with his written directions. No delivery shall be made under this paragraph unless (1) the person receiving the money or effects shall sign an itemized receipt therefor, or (2) the delivery is witnessed by two persons. The provisions of this paragraph do not prohibit withdrawals made necessary by the provisions of this part for the disposition of money and effects left by patients on death or on departure from the station or hospital, or by the provisions of § 35.10.

§ 35.9 Disposition of money and effects left by other than deceased patients.

Money and effects left on the premises by a patient shall be forwarded promptly to him. If because his whereabouts are unknown his money and effects cannot be delivered to him within 120 days after his departure, his money shall be deposited into the Treasury and credited to the account entitled ''Money and Effects of Former Patients (PHS (T) name of patient),'' and his effects shall be held for him for six months and then sold in accordance with § 35.49, and the proceeds deposited into the Treasury and credited to the above account.

§ 35.10 Destruction of effects dangerous to health.

The officer in charge shall cause to be destroyed effects brought into or received in the station or hospital area by patients which, in the judgement of such officer, are dangerous as a source of disease to the health or life of patients or personnel of the station or hospital or visitors therein and cannot otherwise be safely disposed of or rendered harmless by disinfection or other means. The destruction of effects shall be witnessed by at least one officer or employee designated for that purpose by the officer in charge, and appropriate records of the destruction shall be maintained.

§ 35.11 Clinical records; confidential.

A complete clinical record shall be maintained for each patient admitted to a station or hospital of the Service. Such records shall be confidential and shall not be disclosed except as may be provided elsewhere in regulations of the Service.

§ 35.12 Solicitation of legal business prohibited.

The solicitation, directly or indirectly, of legal business or of a retainer or agreement authorizing an attorney to render legal services, is prohibited in all stations and hospitals of the Service.

§ 35.13 Entry for negotiation of release or settlement.

(a) No person shall be permitted to enter a station or hospital of the Service for the purpose of negotiating a settlement or obtaining a general or special release or statement from any patient with reference to any illness or personal injury for which the patient is receiving care or treatment, or for the purpose of conferring with him as an attorney or representative of an attorney with reference to such illness or injury, unless the patient has signified his willingness to have such person enter for such purpose and, in the judgment of the officer in charge, the physical or mental condition of the patient will not thereby be impaired.

(b) Any person entering a station or hospital for a purpose enumerated in paragraph (a) of this section shall register in the manner prescribed by the officer in charge, and shall furnish for the records of the station or hospital the name of each patient by whom he has been received for such a purpose.

§ 35.14 Solicitation of legal business; negotiation of release or settlement; assistance prohibited.

All employees of the Service and all persons attached in any capacity to a station or hospital, including patients, are forbidden to communicate, directly or indirectly, with any person for the purpose of aiding in the solicitation of legal business or in the negotiation of a settlement or the obtaining of a general or special release or statement from any patient with reference to any

illness or personal injury for which the patient is receiving care or treatment therein. No patient is prohibited by this section from communicating on his own behalf with an attorney of his choice or with other persons.

§ 35.15 Consent to operative procedures.

Except in emergencies when the patient is physically or mentally incapable of consenting and the delay required to obtain the consent of his natural or legal guardian would seriously endanger the patient's health, no operative procedure shall be undertaken unless the patient or, in the case of a minor or incompetent, his natural or legal guardian gives his consent, nor shall any major operative procedure or the administration of a general anaesthetic be undertaken unless such consent has been obtained in writing. The consent or refusal of consent shall be made a part of the clinical record.

§ 35.16 Autopsies and other post-mortem operations.

Autopsies, or other post-mortem operations, including removal of tissue for transplanting, may be performed on the body of a deceased patient only by direction of the officer in charge and only if consented to in writing by a person authorized under the law of the State in which the station or hospital is located to permit an autopsy or such other post-mortem operation under the circumstances of the particular death involved. Restrictions or limitations imposed by the person consenting thereto on the extent of the autopsy or other post-mortem operation shall be observed. Documents embodying consent shall be made a part of the clinical record.

[25 FR 6331, July 6, 1960]

§ 35.17 Fees and charges for copying, certification, search of records and related services.

A prescribed fee, in accordance with the schedule in paragraph (c) of this section, shall be collected for each of the listed services.

(a) *Application for services.* Any person requesting (1) a copy of a clinical record, clinical abstract, or other document containing clinical information; or (2) a certification of a clinical record or document; or (3) a search of clinical records, shall make written application therefor to the Public Health Service facility having custody of the subject matter involved. Such application shall state specifically the particular record or document requested, and the purpose for which such copy or document is desired to be used. The application shall be accompanied by a deposit in an amount equal to the prescribed charge for the service rendered. Where it is not known if a clinical record or other document is in existence, the application shall be accompanied by a minimum deposit of $2.50.

(b) *Authorization for disclosure.* The furnishing of copies of PHS records containing confidential clinical information must comply with the requirements of part I, title 42, Code of Federal Regulations, governing authorization for the disclosure of such information.

(c) *Schedule of fees.*

(1) Photocopy reproduction of a clinical record or other document (through use of facility equipment):	
(a) Processing (searching, preparation of record and use of equipment), first page	$3.25
(b) Each additional page	.25
(2) Certification, per document	.25
(3) Unsuccessful searching, per hour (minimum charge 1 hour)	2.50
(4) Clinical abstracts, per request	3.00
(5) Arranging commercial duplication of a clinical record, per request	[1] 0.50
(6) If the requested material is to be transmitted by registered mail, airmail, or special delivery mail, the postal fees therefor shall be added to the other fees provided above, unless the applicant has included proper postage or stamped return envelopes for this purpose.	

[1] The private concern which duplicates records for an applicant will make a separate charge therefor and will bill the applicant directly.

(d) *Waiver of fee.* The prescribed fee may be waived, in the discretion of the medical officer in charge, under the following circumstances:

(1) When the service or document is requested by another agency of the Federal Government for use in carrying out official Government business.

(2) When a clinical record is requested for the purpose of providing continued medical care to a Service beneficiary by a non-Service physician, clinic, or hospital, in which case the record will be forwarded only to the physician, clinic, or hospital concerned.

(3) When the service or document is requested by an attorney in the prosecution of a Service beneficiary's personal injury claim against a third person, involving the concurrent assertion of a government medical care claim under 42 U.S.C. 2651–2653. In such case, the service or document requested will be furnished only upon compliance with all additional requirements for the release of records in third party recovery cases, including the proper execution of form PHS–4686, Agreement to Assign Claim Upon Request.

(4) When the service or document is requested by, and furnished to, a Member of Congress for official use.

(5) When the service or document is requested by, and furnished to, a court in lieu of the personal court appearance of an employee of the Public Health Service.

(6) When the service or document is required to be furnished free in accordance with a Federal statute or an Executive order.

(7) When the furnishing of the service or document requested without charge would be an appropriate courtesy to a foreign country or international organization.

(Sec. 501, 65 Stat. 290; 31 U.S.C. 483(a); sec. 215, 58 Stat. 690, as amended; 42 U.S.C. 216)

[32 FR 6842, May 4, 1967]

Subpart B—Transfer of Patients

§ 35.21 Authorization of transfer.

Except as otherwise provided by law or regulation with respect to certain classes of patients, the officer in charge of a station or hospital of the Service may provide, without any cost to the patient, for the transfer of the patient either from such station or hospital to another station or hospital of the Service or to any non-Service station or hospital at which the patient may be received, or from any non-Service hospital at which he is receiving care or treatment as a patient of the Service to a station or hospital of the Service.

§ 35.22 Attendants.

Patients shall be transferred by such means and accompanied by such medical, nursing, or other attendants as may be necessary to protect the health and safety of the patient and other persons likely to come into contact with him, including in the case of a prisoner such guards as may be necessary to assure his safekeeping. A female patient requiring the services of attendants shall be accompanied by at least one female attendant. Medical or nursing attendants shall be qualified to care for persons suffering from the type of disease or disorder with which the patient is afflicted and shall be provided with equipment and medicines necessary for the care of the patient.

Subpart C—Disposition of Articles Produced by Patients

§ 35.31 Retention by patients.

Subject to the rules of the station or hospital, patients may be accorded the privilege of retaining articles produced by them in the course of their curative treatment with the aid of materials furnished by the Service. Articles not retained by patients shall be disposed of as provided in this subpart. The provisions of this subpart do not apply to the products of industrial activities established for narcotic addicts.

§ 35.32 Board of appraisers.

The officer in charge shall appoint, from the personnel of the station or hospital, a board of three persons to serve at his pleasure. The board shall provide for the sale of articles having commercial value and shall keep appropriate records of such articles and their disposition.

§ 35.33 Sale; prices; deposit of proceeds.

The board shall determine and redetermine from time to time the prices at which articles are to be sold, and in doing so shall consider the cost of materials used, reasonable handling charges, and the fair market value of the articles. The sale price shall be indicated on each article by tag or other appropriate means, and a list of articles offered for sale and their respective sale prices shall be posted from time to time in the hospital or station area. In its discretion, the board may offer such articles for purchase by

other patients or by charitable organizations before offering them for purchase to the general public. No article shall be sold or resold to any officer or employee of the Service. Moneys received from the sale of articles shall be deposited into the Treasury to the credit of the appropriation from which the materials for making such articles were purchased.

§ 35.34 Resale.

No article purchased under the provisions of this subpart shall be resold in the hospital or station area at a price to exceed the sale price fixed by the board for such article.

§ 35.35 Unsalable articles.

Articles having no commercial value shall be stored, destroyed, or otherwise disposed of as the officer in charge may direct.

Subpart D—Disposal of Money and Effects of Deceased Patients

§ 35.41 Inventory.

Promptly after the death of a patient in a station or hospital of the Service, an inventory of his money and effects left therein shall be made by two or more officers or employees of the Service designated for such purpose by the officer in charge.

§ 35.42 Notice upon death.

The officer in charge shall notify in writing all persons known to him to whom delivery of the patient's money and effects might be made hereunder, and, in the case of an alien patient, a consul of the country of his apparent nationality. Each person so notified shall be requested to furnish information concerning (a) the existence or whereabouts of any persons to whom delivery of the deceased patient's money and effects may be made pursuant to these provisions, and (b) the permanent residence or home of the deceased.

§ 35.43 Delivery only upon filing claim; forms; procedure.

(a) Delivery of the money and effects of a deceased patient shall be made only to a person who has filed a claim therefor on a form prescribed by the Surgeon General.

(b) A claimant shall furnish, in addition to the information on the prescribed form, such additional information as the officer in charge may consider necessary to establish the identity of the claimant and the truth of his statements.

(c) A person filing a claim as a legal representative shall be required to present letters of administration or a certificate of a court attesting his qualification or appointment.

(d) If a claim is made after the money, or proceeds from the sale of the effects, of a deceased patient have been deposited in the Treasury, the claim shall be referred to the General Accounting Office. If the claim is for checks or evidences of indebtedness of the United States which have been trasnsmitted to the issuing agency pursuant to §§ 35.47 and 35.48, the claimant shall be referred to such agency.

§ 35.44 Delivery to legal representative; to other claimants if value is $1,000 or less.

The money and effects of the deceased patient shall in all cases be delivered to the legal representative, if any, of his estate. If the value is $1,000 or less, and the officer in charge has neither notice nor other knowledge of the appointment or qualification of a legal representative, nor reason to believe that a legal representative will be appointed or qualified, he shall deliver all the money and effects, as soon as practicable after the expiration of 10 days from the sending of notices to one of the following in the indicated order of priority:

(a) A person, if any, designated in writing by the patient to receive the same.

(b) The patient's surviving spouse.

(c) The patient's child or children in equal parts.

(d) The patient's parent or parents in equal parts.

(e) Any other person who would be entitled to receive the money and effects under the law of the patient's domicile: *Provided,* That delivery of such money and effects may be made immediately upon application by one

of the persons specified above if the officer in charge has neither notice nor other knowledge that a person higher in the indicated order of priority exists.

§ 35.45 Disposition of effects; exceptions.

Irrespective of the provisions of this subpart, the officer in charge may (a) release from among the effects of the deceased patient so much of the patient's clothing as may be necessary for use in preparation of his body for burial and (b) cause to be destroyed, or otherwise disposed of, such used toilet articles of the patient as appear to have no commercial or other value.

§ 35.46 Conflicting claims.

In any case in which conflicting claims are filed or the officer in charge considers it to be in the interest of persons who may be ultimately entitled thereto, delivery may be withheld from all persons other than a duly qualified legal representative.

§ 35.47 Disposition of Government checks.

Notwithstanding any other provisions of this subpart, immediately upon completion of the inventory, checks drawn on the Treasurer of the United States shall be sent by safe means to the department, agency, or establishment of the Government of the United States issuing such checks. The transmittal shall be accompanied by a statement of the reasons therefor and of all available information which may aid the issuing unit in the disposition of the check transmitted. Notice of the disposition of any checks, with identifying information, shall be given to the person or persons, if any, to which money and effects are delivered in accordance with § 35.44.

§ 35.48 Deposit of unclaimed money; sale of unclaimed effects and deposit of proceeds.

If, within 120 days after sending of notices no claim has been filed pursuant to the provisions of § 35.43, the patient's money, consisting of all types of United States currency and coin, shall be deposited in the Treasury to the credit of the trust-fund account entitled ''Money and Effects of Deceased Patients, Public Health Service.'' If, within six months after the death of a patient, no claim has been filed pursuant to the provisions of § 35.43, his effects (including foreign currency and coin but excluding Postal Savings Certificates and other evidences of indebtedness of the United States) shall be sold at public auction or by sealed bids to the highest bidder and the proceeds deposited to the credit of the trust-fund account entitled ''Money and Effects of Deceased Patients, Public Health Service.'' Postal Savings Certificates and other evidences of indebtedness of the United States shall be transmitted to the issuing department or agency with a statement of the occasion therefor.

§ 35.49 Sale of unclaimed effects; procedures.

The following provisions shall govern the sale of effects:

(a) *Notice.* Reasonable advance notice of proposed sales shall be posted at such prominent places in the station or hospital area as the officer in charge may designate. In addition, a notice shall be posted at the nearest post office, and notices shall be sent by mail to all known persons to whom delivery of money and effects of the patient may be made under the provisions of this subpart. The officer or employee who posts or sends notices of sales shall make an appropriate affidavit on a copy of the notice as to his action in that respect, including in his affidavit the names of persons to whom copies of the notices were mailed and the mailing dates. The copy of the notice on which the affidavit appears shall be retained in the files of the station or hospital.

(b) *Form and contents of notice.* Notice of proposed sales shall be given on a form prescribed by the Surgeon General. The notice shall include: an inventory of the effects to be offered for sale; the names of the patients from whom the effects were received; the precise date, time, and place when and where the sale will be held; a statement that the articles will be available for inspection immediately prior to sale, if sold at public auction, or on a day and during the hours appointed for

the inspection of articles if sold by sealed bid; a statement that the sale is to be held pursuant to the provisions of the regulations in this part, that, if the articles are to be sold by sealed bid, the right to reject all bids is reserved, and that, if otherwise authorized, delivery will be made of effects or proceeds of sales to persons filing claims prior to the sale of effects or prior to the transmittal of proceeds to the Surgeon General.

(c) *Time and place of sales.* All sales shall be held at reasonable hours and at such places within the station or hospital area as the officer in charge may designate.

(d) *Who shall conduct sales.* All sales shall be conducted by the officer in charge or by a responsible officer or employee designated by him.

(e) *Sale and delivery.* All effects offered for sale shall be sold to the highest bidder and delivered to him immediately upon payment of the sale price in cash or by postal money order or certified check and execution of an appropriate receipt by the person to whom delivery is made.

§ 35.50 Disposition of unsold effects.

The officer in charge shall dispose of effects offered for sale but remaining unsold in such manner as he considers to be proper, but, if practicable, such effects shall be used for the benefit of other patients of the Service.

§ 35.51 Manner of delivery; costs, receipts.

(a) If a person entitled under this subpart to receive the money and effects of a patient is unable to take possession thereof at the station or hospital, they shall be sent to him at the expense of the United States in the most economical manner available. The records of the station or hospital shall show the names and addresses of persons to whom money or effects have been sent, the date of sending, the means used, an itemized list of the money or effects sent, and a statement by a witnessing officer or employee verifying the foregoing from his own observation.

(b) If not delivered personally by an authorized officer or employee of the Service, money, evidences of indebtedness, and other valuable papers and documents shall be sent by registered mail (or other safe means).

(c) Persons receiving the money and effects of a patient shall be required to execute an itemized receipt therefor.

§ 35.52 Delivery of possession only; title unaffected.

Except for delivery of effects to purchasers at sales held in accordance with § 35.49, delivery or deposit under this subpart of the money or effects, or the proceeds of a sale of the effects, of a deceased patient constitutes only a transfer of possession and is not intended to affect in any manner the title to such money, effects, or proceeds.

Subpart E—Contributions for the Benefit of Patients

AUTHORITY: Sec. 215, 58 Stat. 690, as amended, 63 Stat. 835 (42 U.S.C. 216); sec. 321, 58 Stat. 695, as amended, 62 Stat. 1017 (42 U.S.C. 248).

SOURCE: 42 FR 60742, Nov. 29, 1977, unless otherwise noted.

§ 35.61 Applicability.

This subpart sets forth the policies and procedures governing the acceptance and administration of contributions of money or property intended solely for the benefit of all patients in a ward or unit or a particular hospital or station of the Public Health Service, excluding outpatient clinics. Such contributions are distinguishable from (a) monies or other valuables belonging to specific patients which are accepted and held in custody for the convenience of the patient until such time as he or she wishes to withdraw them, and (b) gifts to the United States to support Public Health Service functions under section 501 of the Public Health Service Act or other statutory provisions, which may be accepted and administered only in accordance with such statutory provisions or other applicable laws.

§ 35.62 Acceptance of contributions.

(a) The officer in charge of a hospital or station or his delegate may accept contributions of money or personal property which are donated for the

general benefit of all patients within the hospital or station (or a ward or unit thereof) without further specification or conditions as to use. Contributions tendered subject to conditions by the donor, such as expenditure or use only on behalf of certain patients or for specific purposes, may not be accepted.

(b) Contribution of money or property shall be accepted in writing.

§ 35.63 Report of and accounting for contributions.

(a) Contributions of money accepted pursuant to § 35.62 (hereinafter referred to as ''patient fund'') will be treated consistently with Federal deposit rules and as supplemented with appropriate procedures of the facility. This regulation is not intended to exclude contributions for the benefit of patients from proper accountability and control of funds and property.

(b) Contributions of property accepted pursuant to § 35.62 shall be recorded and accounted for in the same manner as other property of a similar kind maintained in the hospital or station, but with suitable identification so that it can be distinguished from government-owned property.

§ 35.64 Donors.

Authorized contributions may be accepted from patients, employees and other individuals, and agencies and organizations.

§ 35.65 Acceptable personal property.

Contributions of personal property which may be accepted pursuant to § 35.62 include, but are not limited to, recreational equipment, furniture, radios and television sets. After its useful life, any cash proceeds realized upon disposition of such property shall be deposited to the credit of the patient fund and shall be available for expenditure pursuant to § 35.66(c).

§ 35.66 Expenditure of cash contributions.

(a) Officials authorized to accept contributions shall not maintain control over the actual obligation or expenditure of such monies.

(b) Only those officers or employees specifically designated in writing by the officer in charge for such purpose may obligate and expend monies from the patient fund. The names of officials so designated shall be provided to the relevant fiscal control office.

(c) Subject to availability of sufficient funds, monies in the patient fund may be expended for materials, services or activities which contribute to the well-being or morale of patients, including but not limited to provision of reading and entertainment materials, recreation activities, and, in appropriate cases, necessary financial support (including travel expenses, meals, and lodging) of relatives, guardians, or friends of patients to enable such persons to be available for the patient's comfort and support.

(d) Officers in charge may issue such additional instructions, not inconsistent with this subpart, as may be necessary to implement its provisions.

PART 36—INDIAN HEALTH

Subpart A—Purpose

Sec.
36.1 Purpose of the regulations.
36.2 Administrative instructions.

Subpart B—What Services are Available and Who is Eligible to Receive Care?

36.10 Definitions.
36.11 Services available.
36.12 Persons to whom health services will be provided.
36.13 Authorization for contract health services.
36.14 Reconsideration and appeals.
36.15 Health Service Delivery Areas.
36.16 Beneficiary Identification Cards and verification of tribal membership.

Subpart C [Reserved]

Subpart D—Transition Provisions

36.31 Transition period.
36.32 Delayed implementation.
36.33 Grace period.
36.34 Care and treatment of people losing eligibility.

Subpart E—Preference in Employment

36.41 Definitions.
36.42 Appointment actions.
36.43 Application procedure for preference eligibility.

Subpart F—Abortions and Related Medical Services in Indian Health Service Facilities and Indian Health Service Programs

36.51 Applicability.
36.52 Definitions.
36.53 General rule.
36.54 Life of the mother would be endangered.
36.55 Drugs and devices and termination of ectopic pregnancies.
36.56 Recordkeeping requirements.
36.57 Confidentiality.

Subpart G—Residual Status

36.61 Payor of last resort.

Subpart H—Grants for Development, Construction, and Operation of Facilities and Services

36.101 Applicability.
36.102 Definitions.
36.103 Eligibility.
36.104 Application.
36.105 Project elements.
36.106 Grant award and evaluation.
36.107 Use of project funds.
36.108 [Reserved]
36.109 Availability of appropriations.
36.110 Facilities construction.
36.111 Interest.
36.112 Additional conditions.
36.113 Fair and uniform provision of services.
36.114 Applicability of other Department regulations.
36.115 Rescission of grants.
36.116 Reports.
36.117 Amendment of regulations.
36.118 Effect on existing rights.
36.119 Penalties.
36.120 Use of Indian business concerns.
36.121 Indian preference in training and employment.

Subpart I—Contracts Under the Indian Self-Determination Act

36.201 Policy and applicability.
36.202 Effect on existing rights.
36.203 Amendment of regulations.
36.204 Definitions.

CONTRACT PROPOSALS, REVIEW, AND APPEAL

36.205 Eligibility and application.
36.206 Tribal clearances—initial contracts.
36.207 Tribal clearances—renewal contracts.
36.208 Evaluation criteria.
36.209 Government property.
36.210 Submitting contract proposals.
36.211 Contract proposal approval officials.
36.212 Review.
36.213 Processing time.
36.214 Tribal appeals to proposal declinations.

PROCUREMENT

36.215 Applicability of regulations.
36.216 Waivers.
36.217 Fair and equal treatment of Indian people.
36.218 Types of contracts.
36.219 Term of contract.
36.220 Use of Indian business concerns.
36.221 Indian preference in training and employment.
36.222 Indemnity and insurance.
36.223 Exemption from bonds.
36.224 Construction and architect-engineering contracts.
36.225 Performance of personal services.
36.226 Advance payments.
36.227 Recordkeeping, reporting and audit.
36.228 Availability of information.
36.229 Penalties.
36.230 Contract revisions or amendments.
36.231 Retrocession of contract programs.
36.232 Contractor assistance.
36.233 Assumption and reassumption of contract programs.
36.234 Operation of retroceded or reassumed contracts.
36.235 Contract funds.
36.236 Unexpended funds under contract.
36.237 Contract funding and renegotiation.

Subpart J—Indian Health Care Improvement Act Programs

SUBDIVISION J–1—PROVISIONS OF GENERAL AND SPECIAL APPLICABILITY

36.301 Policy and applicability.
36.302 Definitions.
36.303 Indians applying for scholarships.
36.304 Publication of a list of allied health professions.
36.305 Additional conditions.

SUBDIVISION J–2 HEALTH PROFESSIONS RECRUITMENT PROGRAM FOR INDIANS

36.310 Health professions recruitment grants.
36.311 Eligibility.
36.312 Application.
36.313 Evaluation and grant awards.
36.314 Use of funds.
36.315 Publication of list of grantees and projects.
36.316 Other HHS regulations that apply.

SUBDIVISION J–3—HEALTH PROFESSIONS PREPARATORY SCHOLARSHIP PROGRAM FOR INDIANS

36.320 Preparatory scholarship grants.
36.321 Eligibility.
36.322 Application and selection.
36.323 Scholarship and tuition.
36.324 Availability of list of recipients.

SUBDIVISION J–4—INDIAN HEALTH SCHOLARSHIP PROGRAM

36.330 Indian health scholarships.

36.331 Selection.
36.332 Service obligation.
36.333 Distribution of scholarships.
36.334 Publication of a list of recipients.

SUBDIVISION J–5—CONTINUING EDUCATION ALLOWANCES

36.340 Provision of continuing education allowances.

SUBDIVISION J–6—CONTRACTS WITH URBAN INDIAN ORGANIZATIONS

36.350 Contracts with Urban Indian organizations.
36.351 Application and selection.
36.352 Fair and uniform provision of services.
36.353 Reports and records.

SUBDIVISION J–7—LEASES WITH INDIAN TRIBES

36.360 Leases with Indian tribes.

SUBDIVISION J–8—HEALTH PROFESSIONS PREGRADUATE SCHOLARSHIP PROGRAM FOR INDIANS

36.370 Pregraduate scholarship grants.
36.371 Eligibility.
36.372 Application and selection.
36.373 Scholarship and tuition.
36.374 Availability of list of recipients.

AUTHORITY: Sec. 3, 68 Stat. 674; 42 U.S.C. 2003, 42 Stat. 208, sec. 1, 68 Stat. 674; 25 U.S.C. 13, 42 U.S.C. 2001, unless otherwise noted.

Subpart A—Purpose

§ 36.1 Purpose of the regulations.

These regulations establish general principles and program requirements for carrying out the Indian health program.

[46 FR 40692, Aug. 11, 1981. Redesignated at 52 FR 35048, Sept. 16, 1987]

§ 36.2 Administrative instructions.

The Service periodically issues administrative instructions to its officers and employees which are primarily found in the Indian Health Service Manual and the Area Office and Program Office supplements. These instructions are operating procedures to assist officers and employees in carrying out their responsibilities, and are not regulations establishing program requirements which are binding upon members of the general public.

[46 FR 40692, Aug. 11, 1981. Redesignated at 52 FR 35048, Sept. 16, 1987]

Subpart B—What Services are Available and Who is Eligible to Receive Care?

§ 36.10 Definitions.

As used in this subpart:

Appropriate ordering official means, unless otherwise specified by contract with the health care facility or provider or by a contract with a tribe or tribal organization, the ordering official for the Service Unit in which the individual requesting contract health services or on whose behalf the services are requested, resides.

Area Director means the Director of an Indian Health Service Area Office designated for purposes for administration of Indian Health Service Programs.

Contract health services means health services provided at the expense of the Indian Health Service from public or private medical or hospital facilities other than those of the Service or those funded by the Service.

Emergency means any medical condition for which immediate medical attention is necessary to prevent the death or serious impairment of the health of an individual.

Health Service Delivery Area means a geographic area designated pursuant to § 36.15 of this subpart.

Indian tribe means any Indian tribe, band, nation, or other organized group or community, including any Alaska Native village or regional or village corporation as defined in or established pursuant to the Alaska Native Claims Settlement Act, 43 U.S.C. 1601 *et. seq.*, which is recognized as eligible for the special programs and services provided by the United States to Indians because of their status as Indians.

Reservation means any Federally recognized Indian tribe's reservation, Pueblo, or colony, including former reservations in Oklahoma, Alaska Native regions established pursuant to the Alaska Native Claims Settlement Act (43 U.S.C. 1601 *et seq.*), and Indian allotments if considered reservation land by the Bureau of Indian Affairs.

Reside means living in a locality with the intent to make it a fixed and a permanent home. The following persons will be deemed residents of the Health Service Delivery Area:

(1) Students who are temporarily absent from the Health Service Delivery Area during full time attendance at programs of vocational, technical, or academic education including normal school breaks;

(2) Persons who are temporarily absent from the Health Service Delivery Area for purposes of travel or employment (such as seasonal or migratory workers);

(3) Indian children placed in foster care outside the Health Service Delivery Area by order of a court of competent jurisdiction and who were residents within the Health Service Delivery Area at the time of the court order.

Secretary means the Secretary of Health and Human Services and any other officer or employee of the Department of Health and Human Services to whom the authority involved has been delegated.

Service means the Indian Health Service.

Service Unit Director means the Director of Indian Health Service programs for a designated geographical or tribal area of responsibility or the equivalent official of a contractor administering an IHS program.

[52 FR 35048, Sept. 16, 1987, as amended at 55 FR 4609, Feb. 9, 1990]

§ 36.11 Services available.

(a) *Type of services that may be available.* Services for the Indian community served by the local facilities and program may include hospital and medical care, dental care, public health nursing and preventive care including immunizations, and health examination of special groups such as school children.

(b) *Where services are available.* Available services will be provided at hospitals and clinics of the Service, and at contract facilities (including tribal facilities under contract with the Service).

(c) *Determination of what services are available.* The Service does not provide the same health services in each area served. The services provided to any particular Indian community will depend upon the facilities and services available from sources other than the Service and the financial and personnel resources made available to the Service.

(d) *Priorities when funds, facilities, or personnel are insufficient to provide the indicated volume of services.* Priorities for care and treatment, as among individuals who are within the scope of the program, will be determined on the basis of relative medical need and access to other arrangements for obtaining the necessary care.

[46 FR 40692, Aug. 11, 1981, as amended at 52 FR 35048, Sept. 16, 1987]

§ 36.12 Persons to whom health services will be provided.

(a) Subject to the requirements of this subpart, the Indian Health Service will provide direct services at its facilities, and contract health services, as medically indicated, and to the extent that funds and resources allocated to the particular Health Service Delivery Area permit, to persons of Indian or Alaska Native descent who:

(1) Are members of a federally recognized Indian tribe; and

(2) Reside within a Health Service Delivery Area designated under § 36.15; or

(3) Are not members of a federally recognized Indian tribe but are the natural minor children (18 years old or under) of a member of a Federally recognized tribe and reside within a Health Service Delivery Area designated under § 36.15.

(b) Subject to the requirements of this subpart, the Indian Health Service will also provide direct services at its facilities and, except where otherwise provided, contract health services, as medically indicated and to the extent that funds and resources allocated to the particular Health Service Delivery Area permit, to people in the circumstances listed below:

(1) To persons who meet the eligibility criteria in paragraph (a) of this section except for the residency requirement, who formerly resided within a Health Service Delivery area designated under § 36.15, and who present themselves to any Indian Health Service or Indian Health Service funded facility (and to minor children of such persons if the children meet the eligibility criteria in paragraph (a) of this

section except for the residency requirement). Contract health services may not be authorized for these individuals;

(2) To a non-Indian woman pregnant with an eligible Indian's child but only during the period of her pregnancy through post-partum (generally about 6 weeks after delivery). In cases where the woman is not married to the eligible Indian under applicable state or tribal law, paternity must be acknowledged in writing by the Indian or determined by order of a court of competent jurisdiction;

(3) To non-Indian members of an eligible Indian's household if the medical officer in charge determines that the health services are necessary to control acute infectious disease or a public health hazard; and

(4) To an otherwise eligible person for up to 90 days after the person ceases to reside in a Health Service Delivery Area when the Service Unit Director has been notified of the move.

(c) Contract health services will not be authorized when and to the extent that Indian Health Service or Indian Health Service funded facilities are available to provide the needed care. When funds are insufficient to provide the volume of contract health services needed by the service population, the Indian Health Service shall determine service priorities on the basis of medical need.

(d) The Indian Health Service may provide direct services at its facilities on a fee-for-service basis to persons who are not beneficiaries under paragraphs (a) and (b) of this section under a number of authorities including the following:

(1) In emergencies under section 322(b) of the Public Health Service Act, 42 U.S.C. 249(b), and 42 CFR 32.111 of the regulations;

(2) To Public Health Service and other Federal beneficiaries under Economy Act (31 U.S.C. 1535) arrangements to the extent that providing services does not interfere with or restrict the provision of services to Indian and Alaska Native beneficiaries; and

(3) To non-beneficiaries residing within the Health Service Delivery Area when approved by the tribe or tribes located on the reservation but only to the extent that providing services does not interfere with or restrict the provision of services to Indian and Alaska Native beneficiaries.

(Approved by the Office of Management and Budget under control number 0915–0107)

[52 FR 35048, Sept. 16, 1987, as amended at 55 FR 4609, Feb. 9, 1990]

§ 36.13 Authorization for contract health services.

(a) No payment will be made for medical care and services obtained from non-Service providers or in non-Service facilities unless the applicable requirements of paragraphs (b) and (c) below have been met and a purchase order for the care and services has been issued by the appropriate ordering official to the medical care provider.

(b) In non-emergency cases, a sick or disabled Indian, or an individual or agency acting on behalf of the Indian, or the medical care provider shall, prior to the provision of medical care and services, notify the appropriate ordering official of the need for services and supply information that the ordering official deems necessary to determine the relative medical need for the services and the individual's eligibility. The requirement for notice prior to providing medical care and services under this paragraph may be waived by the ordering official if:

(1) Such notice and information is provided within 72 hours after the beginning of treatment or admission to a health care facility; and

(2) The ordering official determines that giving of notice prior to obtaining the medical care and services was impracticable or that other good cause exists for the failure to provide prior notice.

(c) In emergency cases, a sick or disabled Indian, or an individual or agency acting on behalf of the Indian, or the medical care provider shall, within 72 hours after the beginning of treatment for the condition or after admission to a health care facility notify the appropriate ordering official of the fact of the admission or treatment, together with information necessary to determine the relative medical need for the services and the eligibility of the

Indian for the services. The 72-hour period may be extended if the ordering official determines that notification within the prescribed period was impracticable or that other good cause exists for the failure to comply.

[43 FR 34654, Aug. 4, 1978. Redesignated at 52 FR 35048, Sept. 16, 1987]

§ 36.14 Reconsideration and appeals.

(a) Any person who has applied for and been denied health services or eligibility by the Indian Health Service or by any contractor contracting to administer an Indian Health Service program or portion of a program, including tribes and tribal organizations contracting under the Indian Self-Determination Act, shall be notified of the denial in writing together with a statement of all the reasons for the denial. The notice shall advise the applicant that within 30 days from the receipt of the notice the applicant.

(b) If the original decision is affirmed on reconsideration, the applicant shall be so notified in writing and advised that an appeal may be taken to the area or program director within 30 days of receipt of the notice of the reconsidered decision. The appeal shall be in writing and shall set forth the grounds supporting the appeal.

(c) If the original or reconsidered decision is affirmed on appeal by the area or program director, the applicant shall be so notified in writing and advised that a further appeal may be taken to the Director, Indian Health Service, within 30 days of receipt of the notice. The appeal shall be in writing and shall set forth the grounds supporting the appeal. The decision of the Director, Indian Health Service, shall constitute final administrative action.

(Approved by the Office of Management and Budget under control number 0915–0107)

[43 FR 34654, Aug. 4, 1978. Redesignated and amended at 52 FR 35048, 35049, Sept. 16, 1987]

§ 36.15 Health Service Delivery Areas.

(a) The Indian Health Service will designate and publish as a notice in the FEDERAL REGISTER specific geographic areas within the United States including Federal Indian reservations and areas surrounding those reservations as Health Service Delivery Areas.

(b) The Indian Health Service may, after consultation with all the Indian tribes affected, redesignate the boundaries of any Health Service Delivery Area followed by publication of a notice in the FEDERAL REGISTER. Any redesignation of a Health Service Delivery area will include the reservation, and those areas close to the reservation boundaries which can reasonably be considered part of the reservation service area based on consideration of the following factors:

(1) The number of persons residing in the off-reservation area who would be eligible under § 36.12(a) (1) and (3).

(2) The number of persons residing in the off-reservation area who have traditionally received health services from the Indian Health Service and whose eligibility for services would be affected;

(3) The geographic proximity of the off-reservation area to the reservation; and

(4) Whether the Indians residing in the off-reservation area can be expected to need and to use health services provided by the Indian Health Service given the alternate resources (health facilities and payment sources) available and accessible to them.

(c) Notwithstanding paragraphs (a) and (b) of this section, the Indian Health Service may designate States, subdivisions of States such as counties or towns, or other identifiable geographic areas such as census divisions or zip code areas, as Health Service Delivery Areas where reservations are nonexistent, or so small and scattered and the eligible Indian population so widely dispersed that it is inappropriate to use reservations as the basis for defining the Health Service Delivery Area.

(d) Any Indian tribal government may request a change in the boundaries of the Health Service Delivery Area. Such a request should be supported by documentation related to the factors for consideration set out in paragraph (b) of this section and shall include documentation of any consultation with or notification of other affected or nearby tribes. The request shall be submitted to the appropriate Area Director(s) who shall afford all Indian tribes affected the opportunity to

express their views orally and in writing. The Area Director(s) shall then submit the request, including all comments, together with the Area's recommendation and independent findings or verification of the factors set out in paragraph (b) of this section, to the Indian Health Service Director or to the Director's designee for the Indian Health Service decision. The decision of the Indian Health Service Director or the Director's designee shall constitute final agency action on the tribe's request. Changes in the boundaries of Health Service Delivery Areas will be published in the FEDERAL REGISTER.

(Approved by the Office of Management and Budget under control number 0915–0107)

[52 FR 35049, Sept. 16, 1987]

§ 36.16 Beneficiary Identification Cards and verification of tribal membership.

(a) The Indian Health Service will issue Beneficiary Identification Cards as evidence of beneficiary status to persons who are currently eligible for services under § 36.12(a). Persons requesting Beneficiary Identification Cards must submit or have on file evidence satisfactory to the Indian Health Service of tribal membership and residence within a Health Service Delivery Area. The absence of a Beneficiary Identification Card will not preclude an otherwise eligible Indian from obtaining services though it may delay the administrative determination that an individual is eligible for services on a no charge basis.

(b) For establishing eligibility or obtaining a Beneficiary Identification Card, applicants must demonstrate that they are members of a federally recognized tribe. Membership in a federally recognized tribe is to be determined by the individual tribe or the Bureau of Indian Affairs. Therefore, the Indian Health Service will recognize two methods of demonstrating tribal membership:

(1) Documentation that the applicant meets the requirements of tribal membership as prescribed by the charter, articles of incorporation, or other legal instruments or traditional processes of the tribe and has been officially designated a tribal member by an authorized tribal official or body; or

(2) Certification of tribal enrollment or membership by the Secretary of the Interior acting through the Bureau of Indian Affairs.

(c) Demonstrating membership in a federally recognized tribe is the responsibility of the applicant. However, the Indian Health Service may consult with the appropriate tribe or the Bureau of Indian Affairs on outstanding questions regarding an applicant's tribal membership if the Indian Health Service has some documentation that it believes may be helpful to the tribe or the Bureau of Indian Affairs in making their determination.

(Approved by the Office of Management and Budget under control number 0915–0107)

[50 FR 35050, Sept. 16, 1987]

Subpart C [Reserved]

Subpart D—Transition Provisions

SOURCE: 52 FR 35050, Sept. 16, 1987, unless otherwise noted.

§ 36.31 Transition period.

(a) The transition period for full implementation of the new eligibility regulations consists of three parts;

(1) A six month delayed implementation;

(2) A six month grace period; and

(3) A health care continuity period determined by medical factors.

§ 36.32 Delayed implementation.

(a) The eligibility requirements in subparts A and B of this part become effective March 16, 1988.

(b) During the six month delayed implementation period the former eligibility regulations will apply.

§ 36.33 Grace period.

(a) Upon the effective date referred to in § 36.32(a), individuals who would lose their eligibility under the new eligilibity regulations published on September 16, 1987, and who have made use of an Indian Health Service of Indian Health Service funded service within three years prior to September 16, 1987 (date of publication of the new eligibility regulations) shall retain

their eligibility for a six month grace period ending September 16, 1988. During this grace period such individual's eligibility will continue to be determined under the former regulations except that the new residency requirements established by subparts A and B must be met for the individual to be eligible.

(b) All individuals who receive services during the grace period based on paragraph (a) of this section and whose eligibility will terminate on September 16, 1988, shall be notified in writing that after September 16, 1988 they will no longer the eligible for services as Indian Health Service beneficiaries. Such written notice should include an explanation of their appeal rights as provided in § 36.14 of the part. These patients shall be offered assistance in locating other health care providers and medical assistance programs.

§ 36.34 Care and treatment of people losing eligibility.

(a) Individuals who lose their eligibility on September 16, 1988, (end of the grace period) and on that date are actively undergoing treatment may still be provided services for a limited period in the following circumstances;

(1) Inpatients in IHS and IHS funded facilities and those receiving inpatient care under contract, including contract health services, may continue to receive such care and necessary follow-up services at Indian Health Service expense until the need for hospitalization and follow-up services has ended as determined by the responsible Indian Health Service or tribal physician, all other conditions being met including medical priorities;

(2) Those actively undergoing a course of outpatient treatment either in Indian Health Service and Indian Health Service funded facilities or through contract health services, termination of which would impair the health of the individual patient, may continue to receive the treatment at Indian Health Service expense for a reasonable length of time, until the course of treatment reaches a point where it may safely be terminated or the patient transferred to other providers as determined by the responsible Indian Health Service or tribal physician, all other conditions being met including medical priorities.

(3) Those under treatment for chronic degenerative conditions may be provided additional treatment at Indian Health Service expense for no longer than 1 year beyond the end of the grace period notwithstanding any determination that it was otherwise safe to transfer treatment to other providers, all other conditions being met including medical priorities.

(b) All patients receiving care under paragraph (a) of this section shall be notified in writing that, after discharge from care provided under any of the above circumstances, they will no longer be eligible for services as Indian Health Service beneficiaries. Such notice shall include an explanation of their appeal rights as provided in § 36.14 of this part. These patients shall be offered assistance in locating other health care providers and medical assistance programs.

Subpart E—Preference in Employment

AUTHORITY: 25 U.S.C. 44, 45, 46 and 472; Pub. L. 83–568, 42 U.S.C. 2003.

§ 36.41 Definitions.

For purposes of making appointments to vacancies in all positions in the Indian Health Service a preference will be extended to persons of Indian descent who are:

(a) Members of any recognized Indian tribe now under Federal jurisdiction;

(b) Descendants of such members who were, on June 1, 1934, residing within the present boundaries of any Indian reservation;

(c) All others of one-half or more Indian blood of tribes indigenous to the United States;

(d) Eskimos and other aboriginal people of Alaska; or

(e) Until January 4, 1990 or until the Osage Tribe has formally organized, whichever comes first, a person of at least one-quarter degree Indian ancestry of the Osage Tribe of Indians, whose rolls were closed by an act of Congress.

[43 FR 29783, July 11, 1978, as amended at 54 FR 48246, Nov. 22, 1989]

§ 36.42 Appointment actions.

(a) Preference will be afforded a person meeting any one of the definitions of § 36.41 whether the placement in the position involves initial appointment, reappointment, reinstatement, transfer, reassignment, promotion, or any other personnel action intended to fill a vacancy.

(b) Preference eligibles may be given a schedule A excepted appointment under 5 CFR 213.3116(b)(8). If the individuals are within reach on a Civil Service Register, they may be given a competitive appointment.

[43 FR 29783, July 11, 1978]

§ 36.43 Application procedure for preference eligibility.

To be considered a preference eligible, the person must submit with the employment application a Bureau of Indian Affairs certification that the person is an Indian as defined by § 36.41 except that an employee of the Indian Health Service who has a certificate of preference eligibility on file in the Official Personnel Folder is not required to resubmit such proof but may instead include a statement on the application that proof of eligibility is on file in the Official Personnel Folder.

[43 FR 29783, July 11, 1978]

Subpart F—Abortions and Related Medical Services in Indian Health Service Facilities and Indian Health Service Programs

AUTHORITY: Sec. 1, 42 Stat. 208, 25 U.S.C. 13; sec. 1, 68 Stat. 674, 42 U.S.C. 2001; sec. 3, 68 Stat. 674, 42 U.S.C. 2003.

SOURCE: 47 FR 4018, Jan. 27, 1982, unless otherwise noted.

§ 36.51 Applicability.

This subpart is applicable to the use of Federal funds in providing health services to Indians in accordance with the provisions of subparts A, B, C, H, I and J of this part.

§ 36.52 Definitions.

As used in this subpart:

Physician means a doctor of medicine or osteopathy legally authorized to practice medicine and surgery at an Indian Health Service or tribally run facility, or by the State in which he or she practices.

§ 36.53 General rule.

Federal funds may not be used to pay for or otherwise provide for abortions in the programs described in § 36.51, except under the Circumstances discribed in § 36.54.

§ 36.54 Life of the mother would be endangered.

Federal funds are available for an abortion when a physician has found and so certified in writing to the appropriate tribal or other contracting organization, or service unit or area director, that ''on the basis of my professional judgement the life of the mother would be endangered if the fetus were carried to term.'' The certification must contain the name and address of the patient.

§ 36.55 Drugs and devices and termination of ectopic pregnancies.

Federal funds are available for drugs or devices to prevent implantation of the fertilized ovum, and for medical procedures necessary for the termination of an ectopic pregnancy.

§ 36.56 Recordkeeping requirements.

Documents required by § 36.54 must be maintained for three years pursuant to the retention and custodial requirements for records at 45 CFR 74.20 *et seq.*

§ 36.57 Confidentiality.

Information which is acquired in connection with the requirements of this subpart may not be disclosed in a form which permits the identification of an individual without the individual's consent, except as may be necessary for the health of the individual or as may be necessary for the Secretary to monitor Indian Health Service program activities. In any event, any disclosure shall be subject to appropriate safeguards which will minimize the likelihood of disclosures of personal information in identifiable form.

Subpart G—Residual Status

§ 36.61 Payor of last resort.

(a) The Indian Health Service is the payor of last resort of persons defined as eligible for contract health services under these regulations, notwithstanding any State or local law or regulation to the contrary.

(b) Accordingly, the Indian Health Service will not be responsible for or authorize payment for contract health services to the extent that:

(1) The Indian is eligible for alternate resources, as defined in paragraph (c), or

(2) The Indian would be eligible for alternate resources if he or she were to apply for them, or

(3) The Indian would be eligible for alternate resources under State or local law or regulation but for the Indian's eligibility for contract health services, or other health services, from the Indian Health Service or Indian Health Service funded programs.

(c) *Alternate resources* means health care resources other than those of the Indian Health Service. Such resources include health care providers and institutions, and health care programs for the payment of health services including but not limited to programs under title XVIII and XIX of the Social Security Act (i.e., Medicare, Medicaid), State or local health care programs and private insurance.

[55 FR 4609, Feb. 9, 1990]

Subpart H—Grants for Development, Construction, and Operation of Facilities and Services

AUTHORITY: Secs. 104, 107, 25 U.S.C. 450h(b), 450k; Sec. 3, Pub. L. 83–568, 42 U.S.C. 2003.

SOURCE: 40 FR 53143, Nov. 14, 1975, unless otherwise noted.

§ 36.101 Applicability.

The regulations of this subpart are applicable to grants awarded pursuant to section 104(b) of Pub. L. 93–638, 25 U.S.C. 450h(b) for (a) projects for development including feasibility studies, construction, operation, provision, or maintenance of services and facilities provided to Indians and, (b) for projects for planning, training, evaluation or other activities designed to improve the capacity of a tribal organization to enter into a contract or contracts pursuant to section 103 of the Act. Such grants may include the cost of training personnel to perform grant related activities.

§ 36.102 Definitions.

As used in this subpart:

(a) *Act* means Title I of the Indian Self-Determination and Education Assistance Act, Pub. L. 93–638 (88 Stat. 2203).

(b) *Indian* means a person who is a member of an Indian tribe.

(c) *Indian tribe* means any Indian tribe, band, nation, rancheria, Pueblo, colony or community, including any Alaska Native Village or regional or village corporation as defined in or established pursuant to the Alaska Native Claims Settlement Act, Pub. L. 92–203 (85 Stat. 688 which is recognized as eligible by the United States Government for the special programs and services provided by the United States to Indians because of their status as Indians.

(d) *Tribal organization* means:

(1) The recognized governing body of any Indian tribe; or

(2) Any legally established organization of Indians which is:

(i) Controlled, sanctioned or chartered by such governing body or bodies; or

(ii) Democratically elected by the adult members of the Indian community to be served by such organization and which includes the maximum participation of Indians in all phases of its activities.

(e) *Secretary* means the Secretary of the Department of Health and Human Services and any other officer or employee of the Department of Health and Human Services to whom the authority involved has been delegated.

(f) *Grantee* means the tribe or tribal organization that receives a grant under section 104(b) of the Act and this subpart and assumes the legal and financial responsibility for the funds awarded and for the performance of the grant supported activity in accordance with the Act and these regulations.

(g) *Indian owned economic enterprise* means any commercial, industrial, or business activity established or organized for the purpose of profit which is not less than 51 percent Indian owned.

§ 36.103 Eligibility.

Any Indian tribe or tribal organization is eligible to apply for a grant under this subpart.

§ 36.104 Application.

(a) Forms for applying for grants are governed by 45 CFR part 74, subpart N.

(b) In addition to such other pertinent information as the Secretary may require, the application for a grant under this subpart shall contain the following:

(1) A description of the applicant including an indication whether the applicant is a Tribe or tribal organization, and if the latter:

(i) The legal and organizational relationship of the applicant to the Indians in the Area to be served or effected by the project.

(ii) A description of the current and proposed participation of Indians in the activities of applicant.

(iii) Whether applicant is controlled, sanctioned or chartered by the governing body of the Indians to be served, and if so, evidence of such fact.

(iv) If elected, a description of the election process, voting criteria, and extent of voter participation in the election designating the organization.

(2) A narrative description of the project including its goals and objectives and the manner in which the proposed project is compatible with published Indian Health Service statements of availability of funds, the manner in which those goals and objectives are to be attained, and a work and time schedule which will be utilized to accomplish each goal and objective.

(3) A description of applicant's staff, present or proposed, including their qualifications, academic training, responsibilities and functions.

(4) A description of the manner in which the staff is or will be organized and supervised to carry out proposed activities.

(5) A description of training to be provided as part of the proposed project.

(6) A description of the administrative, managerial, and organizational arrangements and resources to be utilized to conduct the proposed project.

(7) An itemized budget for the budget period (normally 12 months) for which support is sought and justification of the amount of grant funds requested.

(8) The intended financial participation, if any, of the applicant, specifying the type of contributions such as cash or services, loans of full or part-time staff, equipment, space materials or facilities, or other contributions.

(9) Where health services are to be provided, a description of the nature of the services to be provided and the population to be served.

(10) A description of the Federal property, real and personal, equipment, facilities and personnel which applicant proposes to utilize and a description of the arrangements which applicant has made or will make to assume responsibility for the operation and management of those facilities.

(c) The application shall contain assurances satisfactory to the Secretary that the applicant will:

(1) Where applicant is providing services, provide such services at a level and range which is not less than that provided by the Indian Health Service or that identified by the Service after negotiation with the applicant, as an appropriate level, range and standard of care.

(2) Where providing services, provide services in accordance with law and applicable Indian Health Service policies and regulations.

(3) Where providing services, provide services in a fair and uniform manner, consistent with medical need, to all Indian people.

(Approved by the Office of Management and Budget under control number 0915–0045)

[40 FR 53143, Nov. 14, 1975, as amended at 50 FR 1853, Jan. 14, 1985]

§ 36.105 Project elements.

A project supported under this subpart must:

(a) Have sufficient, adequately trained staff in relation to the scope of the project.

(b) Maintain a mechanism for dealing with complaints regarding the delivery of health services or performance of project activities.

(c) Hold confidential all information obtained by the personnel of the project from participants in the project related to their examination, care, and treatment, and shall not release such information without the individuals' consent except as may be required by law, as may be necessary to provide service to the individual, or as may be necessary to monitor the operations of this program or otherwise protect the public health. Information may be disclosed in a form which does not identify particular individuals.

(d) Operate with the approval, support, and involvement of the tribe, tribes, or Indian communities in the area served by the local facility and program.

(e) Keep in force adequate liability insurance in accordance with the approved application unless the Secretary, for good cause shown, has determined that such insurance was not obtainable or appropriate or has determined that such insurance may be permitted to expire or lapse. The insurance shall provide that prior to cancellation the Secretary must be notified and must further provide that for each such policy of insurance the carrier shall waive any right it may have to raise as a defense the tribe's sovereign immunity from suit but such waiver shall extend only to claims the amount and nature of which are within the coverage and limits of the policy and shall not authorize or empower the insurance carrier to waive or otherwise limit the tribe's sovereign immunity outside or beyond the coverage and limits of the policy of insurance.

NOTE: This provision is excepted from application of 45 CFR 74.15 by section 103(c) of Pub. L. 93–638.

(f) Provide services at a level and range which is not less than that provided by the Indian Health Service or that identified by the Service as an appropriate level, range, and standard of care.

[40 FR 53143, Nov. 14, 1975, as amended at 50 FR 1854, Jan. 14, 1985]

§ 36.106 Grant award and evaluation.

(a) Within the limits of funds determined by the Secretary to be available for such purpose, the Secretary may award grants under this subpart to applicants whose project will, in the judgment of the Secretary, best promote the purposes of the Act, and the regulations of this subpart, taking into account:

(1) The apparent capability of the applicant to organize and manage the proposed project successfully considering, among other things the adequacy of staff, management systems, equipment and facilities.

(2) The soundness of the applicant's plan for conducting the project and for assuring effective utilization of grant funds.

(3) The adequacy of the budget in relation to the scope of the project and available funds.

(4) The relative effectiveness of the applicant's plan, as set forth in the application, to carry out each of the requirements § 36.105.

(5) The compatibility of the proposed project with the published goals and responsibilities of the IHS in carrying out its statutory mission.

(b) The Notice of Grant Awards specifies how long the Secretary intends to support the project period without requiring the project to re-compete for funds. This period, called the project period, will usually be for one to two years. The total project period comprises the original project period and any extension. Generally the grant will be for a one-year budget period, any subsequent award will also be a one-year budget period. A grantee must submit a separate application for each subsequent year. Decisions regarding continuation awards and the funding level of such awards will be made after consideration of such factors as the grantee's progress and management practices, and the availability of funds. In all cases, awards require a determination by the Secretary that funding is in the best interest of the Federal Government.

(c) Neither the approval of any application nor the award of any grant commits or obligates the Federal Government in any way to make any additional, supplemental, continuation or

other award with respect to any approved application or portion of an approved application.

[40 FR 53143, Nov. 14, 1975, as amended at 50 FR 1854, Jan. 14, 1985]

§ 36.107 Use of project funds.

(a) A grantee shall only spend funds it receives under this subpart according to the approved application and budget, the regulations of this subpart, the terms and conditions of the award and the applicable cost principles prescribed in subpart Q of 45 CFR part 74.

(b) The provisions of any other Act notwithstanding, any funds made available to a tribal organization under grants pursuant to section 104(b) of the Act may be used as matching shares for any other Federal grant programs which contribute to the purposes for which grants under this section are made.

NOTE: This provision is excepted from application of 45 CFR 74.53 by section 104(c) of Pub. L. 93–638.

[40 FR 53143, Nov. 14, 1975, as amended at 50 FR 1854, Jan. 14, 1985]

§ 36.108 [Reserved]

§ 36.109 Availability of appropriations.

The Secretary will from time to time publish a notice in the FEDERAL REGISTER indicating by areas the allotment of funds and categories of activities for which awards may be made under this subpart. The Secretary may revise such allotments and categories from time to time and will promptly publish a notice of such revisions in the FEDERAL REGISTER.

§ 36.110 Facilities construction.

In addition to other requirements of this subpart:

(a) An applicant for a construction grant to build, renovate, modernize, or remodel a hospital, clinic, health station or quarters for housing personnel associated with such facilities, must in its application:

(1) Provide its assessment of the environmental impact of the project as called for by section 102(2)(c) of the National Environmental Policy Act of 1969 (42 U.S.C. 4332(c)).

(2) Furnish its evaluation of the project site in accordance with the terms and conditions of E.O. 11296, 31 FR 10663 (August 10, 1966) relating to the evaluation of flood hazards in locating federally owned or financed facilities.

(b) The following requirements are applicable to each construction grant to build, renovate, modernize, or remodel a hospital, clinic, health station or quarters for housing personnel associated with such facilities.

(1) Competitive bids. The approval of the Secretary shall be obtained before the project is advertised or placed on the market for bidding. The approval shall include a determination by the Secretary that the final plan and specifications conform to the minimum standards of construction and equipment specified in the grant award or in HHS documents specified in the grant award.

(2) There will be no preference given to local contractors or suppliers over non-local contractors or suppliers, except as otherwise provided in these regulations.

(3) Construction contracts and subcontracts under this program are subject to the Davis-Bacon Act (40 U.S.C. 276a et seq.). For requirements that grantees must observe for enforcing compliance by contractors and subcontractors, see the section on contract provisions in the procurement standards for HHS grantees made applicable by subpart P of 45 CFR part 74.

(4) Minimum standards of construction and equipment. The plans and specifications for the project will conform to the minimum standards of construction and equipment specified in the grant award or in HHS documents specified in the grant award.

(5) The following provision must be included in all construction contracts let by the grantee: ''The Secretary of the Department of Health and Human Services shall have access at all reasonable times to work wherever it is in preparation or progress, and the contractor shall provide proper facilities for such access and inspection.''

[40 FR 53143, Nov. 14, 1975, as amended at 50 FR 1854, Jan. 14, 1985]

§ 36.111 Interest.

Tribes and Tribal organizations shall not be held accountable for interest earned on grant funds, pending disbursement by such organization.

NOTE: This provision is excepted from application of 45 CFR 74.47(a) by section 106(b) of Pub. L. 93–638.

[40 FR 53143, Nov. 14, 1975, as amended at 50 FR 1854, Jan. 14, 1985]

§ 36.112 Additional conditions.

The Secretary may with respect to any grant award impose additional conditions prior to or at the time of any award when in his judgment such conditions are necessary to assure or protect advancement of the approved project, the interests of public health, or the conservation of grant funds.

§ 36.113 Fair and uniform provision of services.

Services provided pursuant to a grant under this subpart shall be provided by the Grantee in a fair and uniform manner to all participants in the project consistent with their medical need, the policies and regulations of the Indian Health Service, and the Act.

§ 36.114 Applicability of other Department regulations.

Several other regulations apply to grants under this subpart. These include to the extent applicable but are not limited to:

42 CFR part 50, subpart D, Public Health Service grant appeals procedure
45 CFR part 16, Procedures of the Departmental Grant Appeals Board
45 CFR part 74, Administration of grants
45 CFR part 75, Informal grant appeals procedures
45 CFR part 84, Nondiscrimination on the basis of handicap in programs and activities receiving or benefiting from Federal financial assistance
45 CFR part 86, Nondiscrimination on the basis of sex in education programs and activities receiving or benefiting from Federal financial assistance
45 CFR part 91, Nondiscrimination on the basis of age in HHS programs or activities receiving Federal financial assistance

NOTE: To the extent they provide special benefits to Indians, grants under this subpart are exempted from the requirements of section 601 of the Civil Rights Act of 1964 [42 U.S.C. 200d], prohibiting discrimination on the basis of race, color or national origin, by regulation at 45 CFR 80.3(d) which provides, with respect to Indian health services, that, ''An individual shall not be deemed subjected to discrimination by reasons of his exclusion from the benefits of a program limited by Federal law to individuals of a particular race, color, or national origin different from his.

[50 FR 1854, Jan. 14, 1985]

§ 36.115 Rescission of grants.

(a) When the Secretary determines that the performance of a grantee under these regulations involves (1) the violation of the rights or endangerment of the health, safety, or welfare of any persons, or (2) gross negligence or the mismanagement in the handling or use of funds under the grant, the Secretary will, in writing, notify the grantee of such determination and will request that the grantee take such corrective action, within such period of time, as the Secretary may prescribe.

(b) When the Secretary determines that a grantee has not taken corrective action (as prescribed by him under paragraph (a) of this section) to his satisfaction, he may, after providing the grantee an opportunity for a hearing in accordance with paragraph (c) of this section, rescind the grant in whole or in part and if he deems it appropriate, assume or resume control or operation of the program, activity, or service involved.

(c) When the Secretary has made a determination described in paragraph (b) of this section, he shall in writing notify the grantee of such determination and of the grantee's right to request a review of such determination (and of the determination described in paragraph (a) of this section) under the Public Health Service Grant Appeals Procedure (42 CFR part 50, subpart D). Such notification by the Secretary shall set forth the reasons for the determination in sufficient detail to enable the grantee to respond and shall inform the grantee of its opportunity for review under such subpart D. If the review held under subpart D results in a response adverse to the grantee's position, the grantee shall be informed of its right to have a hearing before the Department Grant Appeals Board, pursuant to 45 CFR part 16.

(d) Where the Secretary determines that a grantee's performance under a grant awarded under this subpart poses an immediate threat to the safety of any person, he may immediately rescind the grant in whole or in part and if he deems it appropriate, assume or resume control or operation of the program, activity, or service involved. Upon such recission he will immediately notify the grantee of such action and the basis or reasons therefor; and offer the grantee an opportunity for a hearing to be held within 10 days of such action. If the grantee requests such a hearing, the Secretary will designate three officers or employees of the Department to serve as a hearing panel. No officer or employee from the immediate office of the official who made the decision to rescind the grant under this paragraph may be designated to serve on the hearing panel.

(1) The hearing shall be commenced within 10 days after the recission of the grant, shall be held on the record and shall afford the grantee the right:

(i) To notice of the issues to be considered;

(ii) To be represented by counsel;

(iii) To present witnesses on grantee's behalf; and

(iv) To cross-examine other witnesses either orally or through written interrogatories.

(2) The hearing panel shall, within 25 days after the conclusion of the hearing, notify all parties in writing of its decision.

(3) Such decision shall not be subject to further hearing under 42 CFR part 50, subpart D or 45 CFR part 16.

(e) In any case where the Secretary has rescinded a grant under paragraph (b) or (d) of this section, he may decline to enter into a new grant agreement with the grantee until such time as he is satisfied that the basis for the recission has been corrected. Nothing in this section shall be construed as contravening the Occupational Safety and Health Act of 1970 (84 Stat. 1590), as amended (29 U.S.C. 651).

(f) In any case where the Secretary has rescinded a grant for the delivery of health services under this subpart, the grantee shall, upon the request of the Secretary, transfer to the Secretary all medical records compiled in the operation of the supported project.

NOTE: This section is an exception to 45 CFR part 74, subpart M required by section 109 of Pub. L. 93–638.

[40 FR 53143, Nov. 14, 1975, as amended at 50 FR 1855, Jan. 14, 1985]

§ 36.116 Reports.

In addition to the reporting and information requirements provided in subpart J of 45 CFR part 74 made applicable to grants under this subpart by § 36.114, each recipient of Federal financial assistance shall make such reports and information available to the Indian people served or represented by such recipient as and in a manner determined by the Secretary to be adequate.

NOTE: This section is a requirement in addition to 45 CFR part 74 and is required by section 5(c) of Pub. L. 93–638.

[40 FR 53143, Nov. 14, 1975, as amended at 50 FR 1855, Jan. 14, 1985]

§ 36.117 Amendment of regulations.

Before revising or amending the regulations in this subpart, the Secretary shall take the following actions:

(a) Consult with Indian Tribes and national and regional Indian organizations to the extent practicable about the need for revision or amendment and consider their views in preparing the proposed revision or amendment.

(b) Present the proposed revision or amendment to the Committees on Interior and Insular Affairs of the United States Senate and House of Representatives.

(c) Publish the proposed revisions or amendments in the FEDERAL REGISTER as proposed rulemaking to provide adequate notice to receive comments from, all interested parties.

(d) After consideration of all comments received, publish the regulations in the FEDERAL REGISTER in final form not less than 30 days before the date they are made effective.

§ 36.118 Effect on existing rights.

The regulations in this part are not meant to and do not:

(a) Affect, modify, diminish, or otherwise impair the sovereign immunity from suit enjoyed by an Indian tribe;

(b) Authorize, require or permit the termination of any existing trust responsibility of the United States with respect to the Indian people;

(c) Permit significant reduction in services to Indian people as a result of this subpart.

§ 36.119 Penalties.

Section 6 of Pub. L. 93–638, 25 U.S.C. 450(d) provides:

Whoever, being an officer, director, agent, or employee of, or connected in any capacity with, any recipient of a contract, subcontract, grant, or subgrant pursuant to this Act or the Act of April 16, 1934 (48 Stat. 596), as amended, embezzles, willfully misapplies, steals, or obtains by fraud any of the money, funds, assets, or property which are the subject of such a grant, subgrant, contract, or subcontract, shall be fined not more than $10,000 or imprisoned for not more than two years, or both, but if the amount so embezzled, misapplied, stolen, or obtained by fraud does not exceed $100, he shall be fined not more than $1,000 or imprisoned not more than one year, or both.

§ 36.120 Use of Indian business concerns.

Grants awarded pursuant to this subpart will incorporate the following:

Use of Indian business concerns.

(a) As used in this clause, the term ''Indian organizations of an Indian-owned economic enterprise'' as defined in section 102(g) of this subpart.

(b) The grantee agrees to give preference to qualified Indian business concerns in the awarding of any contracts, subcontracts or subgrants entered into under the grant consistent with the efficient performance of the grant. The grantee shall comply with any preference requirements regarding Indian business concerns established by the tribe(s) receiving services under the grant to the extent that such requirements are consistent with the purpose and intent of this paragraph.

NOTE: This section is an exception to 45 CFR part 74, required by section 7(b) of Pub. L. 93–638.

[40 FR 53143, Nov. 14, 1975, as amended at 50 FR 1855, Jan. 14, 1985]

§ 36.121 Indian preference in training and employment.

(a) Any grant made under this subpart, or a contract or subgrant made under such a grant shall require that, to the greatest extent feasible preferences and opportunities for training and employment in connection with the administration of such grant, or contract or subgrant made under such grant, shall be given to Indians.

(b) The grantee shall include the requirements of paragraph (a) of this section in all contracts and subgrants made under a grant awarded under this subpart.

Subpart I—Contracts Under the Indian Self-Determination Act

AUTHORITY: Secs. 103, 107, 25 U.S.C. 450g, 450k; sec. 3, Pub. L. 83–568, 42 U.S.C. 2003.

SOURCE: 40 FR 53147, Nov. 14, 1975, unless otherwise noted.

§ 36.201 Policy and applicability.

(a) *Policy*. (1) The Congress has recognized the obligation of the United States to respond to the strong expression of the Indian people for self-determination by assuring maximum Indian participation in the direction of educational as well as other Federal services to Indian communities so as to render such services more responsive to the needs and desires of those communities.

(2) The Congress has declared its commitment to the maintenance of the Federal Government's unique and continuing relationship with the responsibilities to the Indian people through the establishment of a meaningful Indian self-determination policy which will permit an orderly transition from Federal domination of programs for and services to Indians to effective and meaningful participation by the Indian people in the planning, conduct, and administration of those programs and services.

(3) It is the policy of the Secretary of the Department of Health and Human Services to facilitate the efforts of Indian tribes to plan, conduct, and administer programs, or portions thereof, which the Indian Health Service is authorized to administer for the benefit of Indians.

(4) It is the policy of the Secretary to continually encourage Indian tribes to become increasingly knowledgeable

about Indian Health Service programs and the opportunities Indian tribes have regarding them; however, it is the policy of the Indian Health Service to leave to Indian tribes the initiative in making requests for contracts and to regard self-determination as including the decision of an Indian tribe not to request contracts.

(5) It is the policy of the Indian Health Service not to impose sanctions on Indian tribes with regard to contracting or not contracting; however, the special resources made available to facilitate the efforts of those Indian tribes which do wish to contract should be made known to all tribes, as should the current realities of funding and Federal personnel limitations.

(6) Contracting is one of several mechanisms by which Indian tribes can exercise their right to plan, conduct, and administer programs or portions thereof which the Secretary is authorized to administer for the benefit of Indians. Another mechanism afforded Indian tribes is the use of a grant, as provided in subpart H of this part, or other resources, to plan the manner in which it wishes the Indian Health Service to operate a program or portion thereof.

(7) The regulations in this subpart are not meant to and do not change the eligibility criteria which individuals must meet to be eligible for any program currently operated by the Indian Health Service.

(b) The regulations of this subpart are applicable to contracts awarded pursuant to section 103 of Pub. L. 93–638, 25 U.S.C. 450g to carry out any or all of the functions, authorities, and responsibilities of the Secretary of Health and Human Services under the Act of August 5, 1954 (68 Stat. 674), as amended, 42 U.S.C. 2001 *et seq.*

§ 36.202 Effect on existing rights.

The regulations in this subpart are not meant to and do not:

(a) Affect, modify, diminish, or otherwise impair the sovereign immunity from suit enjoyed by an Indian tribe.

(b) Authorize, require or permit the termination of any existing trust responsibility of the United States with respect to the Indian people.

(c) Permit significant reduction in services to Indian people as a result of this subpart.

(d) Nothing in these regulations shall be construed to require a tribe to apply for a contract or contracts with the Secretary to carry out under the Indian Self-Determination Act any of the Secretary's functions, authorities and responsibilities under the Act of August 5, 1954, as amended, 42 U.S.C. 2001, *et seq.* Such applications under these regulations are voluntary.

(e) Nothing in these regulations shall be construed to preclude the making of contracts under any other authority of law nor to restrict contracts with Indian tribes or tribal organizations to contracts entered into under section 103 of the Act.

§ 36.203 Amendment of regulations.

Before revising or amending the regulations in this subpart, the Secretary will take the following actions:

(a) Consult with Indian tribes and national and regional Indian organizations to the extent practicable about the need for revision or amendment and consider their views in preparing the proposed revision or amendment.

(b) Present the proposed revision or amendment to the Committees on Interior and Insular Affairs of the United States Senate and House of Representatives.

(c) Publish the proposed revisions or amendments in the FEDERAL REGISTER as proposed rulemaking to provide adequate notice to receive comments from all interested parties.

(d) After consideration of all comments received, publish the regulations in the FEDERAL REGISTER in final form not less than 60 days before the date they are made effective.

§ 36.204 Definitions.

(a) *Act* means Title I of the Indian Self-Determination and Education Assistance Act, Pub. L. 93–638 (25 U.S.C. 450f *et seq.*).

(b) *Secretary* means the Secretary of Health and Human Services and any other officer or employee of the Department of Health and Human Services to whom the authority involved has been delegated.

(c) *Director* means the Director, Indian Health Service, Health Services Administration, Public Health Service, Department of Health and Human Services (IHS) who is the official to whom the Secretary has delegated full responsibility and authority to implement and administer those aspects of the Act related to the health and well-being of the Indian people.

(d) *Area Director* means the official in charge of an Indian Health Service Area, or Program Office.

(e) *Contracting Officer* means the person executing the contract on behalf of the Government and any other officer or employee who is properly designated Contracting Officer; and the term includes, except as otherwise provided in the contract, the authorized representative of the Contracting Officer acting within the limits of his authority.

(f) *Indian* means a person who is a member of an Indian tribe.

(g) *Indian Tribe* means any Indian tribe, band, nation, rancheria, Pueblo, colony or community, including any Alaska Native village or regional or village corporation as defined in or established pursuant to the Alaska Native Claims Settlement Act (85 Stat. 688) which is recognized as eligible by the United States Government for the special programs and services provided by the United States to Indians because of their status as Indians.

(h) *Tribal organization* means:

(1) The recognized governing body of any Indian tribe; or

(2) Any legally established organization of Indians which is:

(i) Controlled, sanctioned or chartered by such governing body or bodies; or

(ii) Democratically elected by the adult members of the Indian community to be served by such organization and which includes the maximum participation of Indians in all phases of its activities.

(i) *An Indian Owned Economic Enterprise* means any commercial industrial, or business activity established or organized for the purpose of profit which is not less than 51 percent Indian owned.

(j) An *Indian Self-Determination Contract Proposal* is the name of the document to be utilized by Indian Tribal organizations to forward to the Indian Health Service, their requests to enter into contracts for health programs or services.

(k) *Trust Resources* means natural resources, land, water, minerals, funds, or property, asset, or claim, including any intangible right or interest in any of the foregoing, which is held by the United States in trust for any Indian tribe or any Indian individual or which is held by any Indian tribe or Indian individual subject to a restriction on alienation imposed by the United States.

(l) *Trust Responsibility* means the responsibility assumed by the Government, by virtue of treaties, statutes and other means, legally associated with the role of trustee, to recognize, protect and preserve tribal sovereignty and to protect, manage, develop and approve authorized transfers of interests in trust resources held by Indian tribes and Indian individuals to a standard of the highest degree of fiduciary responsibility.

(m) *Retrocession* is the voluntary return of a contracted program, or portion thereof, to the Indian Health Service pursuant to section 106(d) of the Act.

(n) *The Contract Proposal Declination Appeals Board (CPDAB)* is a body established to review Indian Self-Determination Contract Proposals which have been disapproved.

CONTRACT PROPOSALS, REVIEW, AND APPEAL

§ 36.205 Eligibility and application.

(a) Any tribal organization upon the request of the Indian tribe to be served, is eligible to apply for a contract with the Secretary to carry out any or all of the functions, authorities and responsibilities of the Secretary under the Act of August 5, 1954.

(b) All such contracts shall be based upon Indian Self-Determination Contract proposals which will be specific and, as a minimum, include the following:

(1) Date submitted.

(2) Full name and address of the Indian tribal organization submitting the proposal.

(3) Full name and tribe(s) which the tribal organization is affiliated with.

(4) Narrative description of the functions, IHS programs, or portions thereof which the tribal organization wants to contract for.

(5) Type of contract proposed (cost reimbursement, fixed price, etc.).

(6) Proposed contract starting and completion dates.

(7) Equipment and facilities needed to carry out the contract and how the tribal organization intends to obtain such.

(8) Narrative indicating the tribal organization's knowledge of the program or function or portion thereof to be contracted for and the relation of such to the mission of the Indian Health Service. Where tribal organizations have already been involved in a contract for such programs, this narrative may be in the form of an updated version of the scope of work under that contract. In any case, the following items should be described in the narrative:

(i) Experience and training of personnel performing under the contract;

(ii) Familiarity with Federal Regulations and procedures involved;

(iii) Experience in operating a similar or related tribal program;

(iv) Extent of subcontracting contemplated and, where such information is available, identification of proposed subcontractors;

(v) Identification of Federal employee transfers contemplated;

(vi) Personnel system and key personnel;

(vii) The work plan for carrying out the contract including the timetable for delivery of optimum services.

(9) Evidence of community support for or lack of opposition to the contract.

(10) Information concerning training to be given to personnel who will perform under the contract.

(11) Estimate of the number of Indians to be served.

(12) A budget, including separate cost estimates for salaries and wages, equipment, supplies, services, travel, subcontracts, other direct costs and overhead.

(13) Justification and request for advance payments.

(14) Names and telephone numbers of the tribal organization's business and technical personnel who may be contacted during the evaluation and negotiation process.

(15) A description of the tribal organization including:

(i) The legal and organizational relationship of the tribal organization to the Indians in the area to be served or effected by the contract.

(ii) A description of the participation of Indians in all phases of the tribal organization.

(iii) Whether the tribal organization is controlled, sanctioned or chartered by the governing body of Indians to be served, and, if so, evidence of such fact.

(iv) And, if elected, a description of the election process, voting criteria, and extent of voter participation.

(16) Evidence of adequate liability insurance coverage or an explanation of why such insurance cannot or should not be obtained. Such insurance shall provide that prior to cancellation the Secretary must be notified and must further provide that each such policy of insurance shall contain a provision that the insurance carrier shall waive any right it may have to raise as a defense the tribe's sovereign immunity from suit but such waiver shall extend only to claims the amount and nature of which are within the coverage and limits of the policy and shall not authorize or empower such insurance carrier to waive or otherwise limit the Tribe's sovereign immunity outside or beyond the coverage and limits of the policy of insurance.

(17) The intended financial participation, if any, of the tribal organization or the tribes to be served specifying the type of contributions such as cash or services, loans of full or part-time staff, equipment, space, materials, or facilities, or other contributions.

(18) Specifically include any requests for waivers to 41 CFR chapter 1 and 3 in accordance with 36.216.

(c) The Indian Self-Determination Contract Proposal shall be executed by a person or persons authorized to act on behalf of the tribal organization and shall be accompanied by evidence that such person or persons are authorized to bind the tribal organization.

(d) The Indian Self-Determination Contract Proposal should be addressed to the Area Director of the appropriate Indian Health Service Area. Such proposals should be submitted, in 5 copies, well in advance of the desired beginning of support.

(e) Tribal organizations may obtain assistance in preparing Indian Self-Determination contract proposals from the IHS Area Offices. The Area Directors shall make any information available to the tribal organization which is needed in the preparation of its proposal except as may be exempt from disclosure by the Freedom of Information Act, 5 U.S.C. 552(b) and the Department of Health and Human Services regulations thereunder, 45 CFR, part 5.

§ 36.206 Tribal clearances—initial contracts.

(a) Before the IHS may enter into a contract with a tribal organization, it must be requested to do so by the tribe. The tribe's request shall be in the form of a resolution by the tribal governing body. If the tribal organization is applying for a contract to perform services benefiting more than one tribe, an authorizing resolution from each tribal governing body must be obtained before submitting the application to IHS for approval. A tribal governing body may pass a single resolution authorizing a tribal organization to apply for, negotiate, and execute more than one contract if the resolution specifies for each contract the same information required in paragraphs (b) and (c) of this section.

(b) The resolution of the tribal governing body shall authorize the applicant tribal organization to apply for, negotiate and contract with the IHS subject to the specific terms, conditions and limitations of the resolution and applicable tribal laws, codes, and regulations and custom. The resolution shall include the date the resolution was approved, and signature of the person authorized to certify the accuracy of the information contained in the resolution.

(c) The tribal governing body's request (resolution) should include the following:

(1) When the tribal organization is the tribal governing body:

(i) A brief statement of the contract scope.

(ii) The tribal official authorized to negotiate the contract and any amendments thereto.

(iii) The tribal official authorized to execute the contract and any amendments thereof.

(iv) The expiration date of the authorities granted by the resolution.

(v) The extent and procedure, if any, for review of the contract and any amendments thereto by the tribal governing body before execution.

(vi) The proposed date for contract commencement.

(vii) The proposed term of the contract.

(2) When the tribal organization is other than the tribal governing body:

(i) The name of the tribal organization.

(ii) A brief statement of the contract scope.

(iii) The extent and procedure, if any, for review by the tribal governing body of the contract and any amendments thereto prior to execution by the tribal organization.

(iv) The tribal office or official to which the IHS should send copies of contract documents and correspondence.

(v) The proposed term of the contract.

(vi) The proposed date for contract commencement.

(vii) Any limitations on authorities granted the tribal organization.

(d) Any procedures specified in this section concerning the manner in which a tribal governing body passes a tribal resolution shall apply except where inconsistent with tribal constitution, law, code, ordinance, or custom. In such cases, the tribal law or procedures shall be cited in the resolution and shall take precedence.

§ 36.207 Tribal clearances—renewal contracts.

The Secretary may renew a contract for the same function(s) or programs as

the original contract at the written request of the tribal organization designated in the tribal resolution. Requests for contract renewals shall be made as follows:

(a) If the original contract provided services to only one Indian tribe, written applications for renewal shall be sent by the tribal organization to the Area Office as follows:

(1) Directly, when the tribal organization involved is the governing body of the tribe.

(2) Through the governing body of the tribe for review when the tribal organization is not the governing body of the tribe. Submission shall be made to the governing body at least 75 calendar days before the original contract expires. The tribal organization shall promptly notify the IHS Area Office in writing of the date the tribal governing body received the application. If, within 45 calendar days after receiving the application, the tribal governing body does not provide the IHS Area Director with a formal resolution objecting to the application for renewal, the absence of receipt of such a resolution shall constitute the tribe's request for renewal of the contract.

(b) If the original contract provided services to more than one Indian tribe, the tribal organization must give a copy of the written application for renewal to each tribal governing body at least 75 calendar days before the original contract expires. The tribal organization shall promptly notify the IHS Area Office where the application is to be submitted in writing, of the date the tribal governing bodies received copies of the application. If, within 45 calendar days after receiving copies of the application none of the tribal governing bodies provide the appropriate IHS Area Office with a formal resolution objecting to the application for renewal, the absence of receipt of such resolutions shall constitute the tribes' request for renewal of the contract. If one or more of the tribal governing bodies involved object to the renewal, the contract will not be made until all the tribal governing bodies have approved the request or the matter is otherwise resolved.

§ 36.208 Evaluation criteria.

(a) Indian Self-Determination Contract Proposals will be evaluated to determine:

(1) If the service to be rendered to Indian people by the proposed contract will be satisfactory;

(2) If the proposed contract will assure that trust resources are protected; and

(3) If the proposed contract will ensure proper completion and maintenance of the project or function involved. Failure to meet any of the above, may be cause for declination of the Indian Self-Determination Contract Proposal. However, the burden of proof to show cause for declination lies with the approving official.

(b) To determine if an Indian Self-Determination Contract Proposal meets the above criteria, the Area Director and his staff will consider whether the tribal organization would be deficient in performance under the contract with respect to the factors listed in this paragraph.

(1) *Equipment, buildings and facilities.* No higher standards with regard to buildings, facilities, or equipment shall be applied to tribal organizations than have previously been applied to IHS. The Indian Health Service shall make available the use of all equipment which has been allocated to the operation of the program by the IHS in the past, unless the IHS determines that the provision of such equipment will seriously interfere with the IHS's ability to provide services to Indian people in noncontracted programs. Where equipment is shared by the programs to be contracted and other non-contracted programs, equipment-sharing or other suitable arrangements will be reflected in the contract.

(2) *Bookkeeping and accounting procedures.* It must be clearly established by the Indian Health Service that the tribal organization which will undertake the contract does have an adequate accounting and bookkeeping system. IHS may assist the contractor in establishing an acceptable bookkeeping and accounting system.

(3) *Substantive knowledge of the program to be contracted.* The tribal organization shall be presumed to have substantive knowledge of the program to

be contracted if it meets one or more of the following conditions:

(i) The tribal organization has successfully managed a similar program before through grant or contract for which standards have been established.

(ii) The members of the tribal organization have been consumers of such services in the past and have developed an understanding of the program sufficient to enable the tribal organization to effectively carry out the contract operation.

(iii) The tribal organization has made arrangements to obtain and to develop its knowledge of the program.

(4) *Community support.* Before the IHS can enter into a contract there must be a request made in accordance with § 36.206. The tribal governing body's resolution under § 36.206 shall be presumed to demonstrate that there is community support for the proposed contract. Any assertion of a lack of community support by persons to be served under the contract, is subject to exhaustion of tribal remedies by those making such assertions.

(5) *Adequacy of trained personnel.* The adequacy of trained personnel available to the tribal organization to carry out the proposed contract will be presumed if any of the following conditions exists:

(i) If the tribal organization has a personnel system that prescribes minimum occupational qualification standards, which shall be not less than minimum Civil Service standards where applicable and procedures for the selection of personnel on the basis of such qualifications, and the personnel to be used under the proposed contract are to be employed under the personnel system.

(ii) If there is no tribal personnel system, it will be assumed that the personnel to be employed under the proposed contract are adequately trained if the tribal organization has established position descriptions for key personnel to be employed under the contract and will establish within a reasonable time a personnel system similar to the one described in paragraph (c)(5)(i) of this section.

(6) *Other necessary components of contract performance.* (i) The contractor's proposal must demonstrate the capacity to meet minimum health program and professional standards established by IHS for each major health service activity of the IHS. The Director will establish and make available to any prospective contractor the minimum standards for each major health service activity of the Indian Health Service. In evaluating the contractor's proposal, the IHS will take into account the prevailing health program and professional standards of IHS for the health service activity in the location concerned.

(ii) The contractor's proposal will be evaluated to determine the contractor's ability to meet the Uniform Administrative Standards published as a Notice of Proposed Rulemaking in February 10, 1975, 40 FR 6304.

(iii) The ability of the contractor to carry out the contract in accordance with IHS policy, the applicable regulations of this part, and the Act.

(iv) No other components shall be prescribed as a basis for declination unless such components are added to the regulations in this subpart by revision or amendment of regulations.

(7) IHS officials may not decline to enter into a contract with a tribal organization because of any objection that would be overcome through the contract.

§ 36.209 Government property.

(a) In carrying out a contract made under this part, the Director will wherever possible, permit a tribal contractor to use buildings, facilities, and related equipment and other personal property owned by the IHS within his jurisdiction. Arrangements on the use of IHS property shall be provided for in the contract or other agreement as appropriate. In determining whether real or personal property can be provided, he shall determine whether the IHS can provide comparable services for any of the uncontracted part of the program.

(b) Requests for the use of IHS property which arise after signing of the contract shall be submitted to the relevant IHS official by the tribal organization. Such requests should be granted unless such a use would seriously interfere with the administration of existing IHS programs. The property

must conform to the minimum standards established pursuant to the Occupational Safety and Health Act of 1970 (29 U.S.C. 651).

§ 36.210 Submitting contract proposals.

(a) When services under the proposed contract will be provided to one or more tribes within the jurisdiction of a single Area Office, the completed contract proposal with documentation of the tribal request(s) and approvals of each such tribe effected shall be delivered or mailed to the Area Director of that Area Office.

(b) When services will be provided to tribes within the jurisdiction of more than one IHS Area Office, a copy of such proposals and documentation shall be forwarded to each of the Area Offices affected.

§ 36.211 Contract proposal approval officials.

The Director or his delegate is authorized to approve proposals for contract under this subpart.

§ 36.212 Review.

Upon receiving a contract application, Indian Health Service will:

(a) Notify the tribal organization in writing that the proposal has been received. This notice will be made within five (5) calendar days after receipt of the proposal.

(b) Review the proposal for completeness and promptly request additional information from the tribal organization or from the requesting tribe which will be needed to reach a decision.

(c) Notify Area Office subordinate activities serving the tribe(s) which will receive services under the contract and obtain any needed information and/or relevant recommendations on the contract.

(d) Assess the contract proposal to determine if it is feasible and if it complies with the appropriate requirements of the Act and of the regulations in this subpart.

(e) Meet with representatives of the tribal governing body and contract applicant to resolve any declination issues.

(f) Whenever declination issues cannot be resolved as in paragraph (e) of this section, notify the tribal organization of deficiencies in the proposal and provide to the extent practicable technical assistance, as requested, to overcome such deficiencies.

(g) Approve or disapprove the proposal after fully reviewing and assessing it and any additional information submitted by the tribal organization provided, however, that no action to disapprove shall be taken during the period of provision of technical assistance.

(h) Promptly notify the tribal organization in writing of the decision to approve or disapprove the proposal. If the proposal is disapproved, the notice shall contain but need not be limited to the following:

(i) Specific objections, which are based on failures to meet applicable program or administrative standards or fund restrictions, which preclude acceptance of the Indian Self-Determination Contract Proposal;

(ii) Guidance to the tribe regarding the steps which need to be taken to overcome the stated objections;

(iii) Identification of assistance which can practicably be made available to the tribe upon request to overcome the stated objections;

(iv) Notification to the tribal organization of its right to appeal and to request an informal or formal hearing in accordance with § 36.214 of this subpart.

§ 36.213 Processing time.

The approving official will approve or disapprove a contract proposal within sixty (60) calendar days after receipt. The sixty (60) calendar day deadline may be extended only after obtaining the written consent of the tribal organization.

§ 36.214 Tribal appeals to proposal declinations.

(a) On being advised that an Indian Self-Determination Contract Proposal has been disapproved by the appropriate approving official, and having been informed of the basis of such decision, the tribal organization may file a written appeal to the Contract Proposal Declination Appeals Board within thirty (30) days after receipt of the Declination Notice and may request an

informal or formal hearing. The written appeal should either refute or overcome the objections stated as a basis for disapproval. The Contract Proposal Declination Appeals Board shall consider such an appeal, conduct any requested hearing thereon, and recommend a decision to the Director, Indian Health Service, or his representative whose decision shall be final.

(b)(1) The tribal organization and the Indian tribe or tribes affected shall be notified, in writing, of the date, time, place, and purpose of the hearing. The hearing will be conducted within 30 calendar days of written request for a hearing or at such later time as may be agreed upon. The IHS will authorize payment of transportation costs and per diem to allow adequate representation of the applicant, if the meeting is more than 50 miles from the office of the applicant.

(2) The hearing may be held under such rules as may be agreed upon.

(c) If formal hearing is requested, it will be conducted within thirty (30) calendar days from receipt of the written request for a hearing or at such later time as may be agreed upon, and the notice of hearing shall specify in writing the date, time, place, and purpose of the hearing and shall afford the tribe or tribal organization the right:

(1) To written notice of the issues to be considered;

(2) To be represented by counsel;

(3) To written record of the hearing;

(4) To present and cross-examine witnesses;

(5) To file written statements prior to the hearing;

(6) To compel the appearance of Indian Health Service personnel or to take depositions of such persons at reasonable times and places.

(d) The decision of the Director, IHS, or his representative on the appeals will be rendered within 15 calendar days from the date of receipt by the Director of the IHS of the Board's recommendation.

(e) The Contract Proposal Declination Appeals Board shall be composed of 5 members appointed by the Director, Indian Health Service, one of whom shall be designated to serve as Chairman.

PROCUREMENT

§ 36.215 Applicability of regulations.

Contracts with tribal organizations resulting from the submission of Indian Self-Determination Contract Proposals as authorized in Pub. L. 93–638 shall be in accordance with chapters 1 and 3 of 41 CFR.

§ 36.216 Waivers.

(a) The Secretary may, for good cause shown, waive for the purposes of a specific contract any federal contracting laws and regulations which he determines are not appropriate for the purposes of the contract involved or are inconsistent with the Act.

(b) Requests for waivers may be initiated by tribal organizations or IHS contracting officers. Such requests will be forwarded to the Director, IHS for decision or further processing to the Secretary as required.

(c) A waiver request shall set forth clearly and precisely the following:

(1) The nature and basis of the needed waiver;

(2) Identification of the procurement regulation provision from which the waiver is needed;

(3) The circumstances under which the waiver would be used;

(4) The intended effect of the waiver;

(5) The length of time for which it can be anticipated that the waiver will be required;

(6) Reasons which will contribute to complete understanding and support of the requested waiver;

(7) Copies of pertinent background papers such as forms, contractor requests, etc.

(d) Whenever a waiver is requested by a tribal organization and such request is denied, the tribal organization will be notified of the reasons for denial.

§ 36.217 Fair and equal treatment of Indian people.

Contracts awarded to tribal organizations pursuant to the Indian Self-Determination Act shall incorporate the following clause:

The Contractor agrees, consistent with medical need, to make no discriminatory distinctions among Indian patients or beneficiaries of this contract. For the purpose of

this contract discriminatory distinctions include but are not limited to the following:

(a) Denying a patient any service or benefit or availability of a facility;

(b) Providing any service or benefit to a patient which is different, or is provided in a different manner or at a different time from that provided to other patients under this contract; subjecting a patient to segregation or separate treatment in any manner related to his receipt of any service; restricting a patient in any way in the enjoyment of any advantage or privilege enjoyed by others receiving any service benefit; treating a patient differently from others in determining whether he satisfies any admission, enrollment, quota, eligibility membership, or other requirements or condition which individuals must meet in order to be provided any service or benefit; the assignment of times or places for the provision of services on the basis of discriminatory distinctions which may be made of the patients to be served.

§ 36.218 Types of contracts.

Cost-reimbursement type contracts provide for payment to the contractor of allowable costs incurred in the performance of the contract, to the extent prescribed in the contract: This type of contract establishes an estimate of total cost for the purpose of obligation of funds, and a monetary ceiling which the contractor may not exceed. Except as provided below, cost reimbursement contracts will be used for all contracts made pursuant to this subpart. A negotiated cost reimbursement contract shall contain the terms set out in § 3–4.6013 of 41 CFR.

(a) Fixed-price contracts may be used in those instances where costs can be precisely established. A negotiated fixed-price contract shall contain the terms set out in § 3–4.6014 of 41 CFR.

(b) Cost sharing contracts may be used where the tribe contributes to the cost of a program and may specify a percentage of cost or fixed amount to be funded by the government.

§ 36.219 Term of contract.

(a) The term of contracts awarded under the Acts shall normally be for one year except that contracts may be made for a longer term up to three years subject to the availability of appropriations under the following circumstances:

(1) The services provided under the contract can reasonably be expected to be continuing in nature and, as a result, a longer contract term would be advantageous.

(2) The Indian tribe or tribes to be served by the contract request that the term be more than one year. The tribal organization will indicate the desired term of the contract in the Self-Determination Contract Proposal.

(b) Contracts made for a term of more than one year may be renegotiated annually to reflect factors which include, but need not be limited to, cost increases beyond the control of the tribal contractor. Proposed changes in the services provided under the contract which reflect changes in program emphasis may be considered during the annual renegotiation if the changes fall within the general scope of the contract.

§ 36.220 Use of Indian business concerns.

Contracts awarded under authority of the Act shall incorporate the following clause, which is also set forth in 41 CFR 3–4.6013 and 3–4.6014.

(a) As used in this clause, the term ''Indian business concern'' means Indian organizations or an Indian-owned economic enterprise as defined in 42 CFR 36.204(i).

(b) The contractor agrees to give preference to qualified Indian business concerns in the awarding of any subcontracts entered into under the contract consistent with the efficient performance of the contract. The contractor shall comply with any preference requirements regarding Indian business concerns established by the tribe(s) receiving services under the contract to the extent that such requirements are consistent with the purpose and intent of this paragraph.

(c) If no Indian business concerns are available under the conditions in paragraph (b) above, the contractor agrees to accomplish the maximum amount of subcontracting, as the contractor determines is consistent with its efficient performance of the contract, with small business concerns, labor surplus area concerns or minority business enterprises, the definitions for which are contained in subparts 1–1.7, 1–1.8, and 1–1.13 of the Federal Procurement Regulations. The contractor is not, however, required to establish a small business, labor surplus, or minority business subcontracting program as described in §§ 1–1.710–3(b), 1–1.805–3(b) and 1–1.1310–2(b), respectively of the Federal Procurement Regulations (41 CFR 1).

§ 36.221 Indian preference in training and employment.

Contracts awarded under authority of the Act shall incorporate the following clause, which is also set forth in 41 CFR 3–4.6013 and 3–4.6014.

INDIAN PREFERENCE IN TRAINING AND EMPLOYMENT

(a) The contractor shall give preference in employment for all work performed under the contract, including subcontracts thereunder, to qualified Indians regardless of age, religion or sex and, to the extent feasible consistent with the efficient performance of the contract, provide employment and training opportunities to Indians, regardless of age, religion or sex that are not fully qualified to perform under the contract. The contractor shall comply with any Indian preference requirements established by the tribe receiving services under the contract to the extent that such requirements are consistent with the purpose and intent of this paragraph.

(b) If the contractor or any of its subcontractors is unable to fill its employment openings after giving full consideration to Indians as required in paragraph (a) above, these employment openings may then be filled by other than Indians under the conditions set forth in the Equal Opportunity clause of this contract.

(c) The contractor agrees to include this clause or one similar thereto in all subcontracts issued under the contract.

§ 36.222 Indemnity and insurance.

Contracts awarded under authority of the Act shall incorporate the following clause, which is also set forth in 41 CFR 3–4.6013 and 3–4.6014.

(a) The Contractor shall indemnify and save and keep harmless the Government against any or all loss, cost, damage, claim, expense or liability whatsoever, because of accident or injury to persons or property or others occurring in connection with any program included as a part of this contract, by providing where applicable, the insurance described below.

(b) The Contractor shall secure, pay the premium for, and keep in force until the expiration of this contract, or any renewal period thereof, insurance as provided below. Such insurance policies shall specifically include a provision stating the liability assumed by the Contractor under this contract.

(1) Workmen's compensation insurance as required by laws of the State.

(2) Owner's, landlord's and tenant's bodily injury liability insurance with limits of not less than $50,000 for each person and $500,000 for each accident.

(3) Property damage liability insurance with limits not less than $25,000 for each accident.

(4) Automobile bodily injury liability insurance with limits of not less than $50,000 for each person, and $500,000 for each accident and property damage liability insurance with a limit of not less than $5,000 for each accident.

(5) Food products liability insurance with limits of not less than $50,000 for each person and $500,000 for each accident.

(6) Professional malpractice insurance where medical, dental or other health professional services are involved.

(7) Other liability insurance not specifically mentioned when required.

(c) Each policy of insurance shall contain an endorsement providing that cancellation by the insurance company shall not be effective unless a copy of the cancellation is mailed (registered) to the Contracting Officer 30 days prior to the effective date of cancellation.

(d) A certificate of each policy of insurance, and any change therein, shall be furnished to the Contracting Officer immediately upon receipt from the insurance company.

(e) Insurance companies of the Contractor shall be satisfactory to the Contracting Officer. When in his opinion an insurance company is not satisfactory for reasons that will be stated, the Contractor shall provide insurance through companies that are satisfactory to the Contracting Officer.

(f) Each policy of insurance shall contain a provision that the insurance carrier waives any rights it may have to raise as a defense the tribe's sovereign immunity from suit, but such waiver shall extend only to claims the amount and nature of which are within the coverage and limits of the policy of insurance. The policy shall contain no provision, either expressed or implied, that will serve to authorize or empower

the insurance carrier to waive or otherwise limit the tribe's sovereign immunity outside or beyond the coverage and limits of the policy of insurance.

§ 36.223 Exemption from bonds.

A tribal organization is not required to furnish performance and payment bonds before carrying out a contract under this part for the construction of public buildings or works as required by the Miller Act of August 24, 1935 (49 Stat. 793), as amended. However, the tribal organization shall require each of its subcontractors, other than tribal organizations, to furnish both performance and payment bonds as follows:

(a) A performance bond with a surety or sureties satisfactory to the approving official, and in an amount he deems adequate, for the protection of the United States.

(b) A payment bond with a surety or sureties satisfactory to the approving official for the protection of all persons supplying labor and material in carrying out the contract the use of each person. Whenever the total amount payable by the terms of the contract is not more than $1,000,000 the payment bond shall be one-half the total amount payable by the terms of the contract. Whenever the total amount payable by the terms of the contract is more than $1,000,000 but not more than $5,000,000, the payment bond shall be 40 percent of the total amount payable by the terms of the contract. Whenever the total amount payable by the terms of the contract is more than $5,000,000 the payment bond shall be $2,500,000.

§ 36.224 Construction and architect-engineering contracts.

The special provisions, procedures, and requirements applicable to construction and architect-engineering service contracts are set forth in §3–4.6008 of 41 CFR.

§ 36.225 Performance of personal services.

Any contract made under this subpart may include provisions for the performance of personal services which would otherwise be performed by Federal employees. Such services include, but are not limited to, performing the following functions in connection with the contract and applicable rules and regulations:

(a) Determining the eligibility of applicants for assistance, benefits, or services.

(b) Determining the extent or amount of assistance, benefits, or services to be provided.

(c) Providing such assistance, benefits, or services.

§ 36.226 Advance payments.

Contracts awarded under the authority of the Act shall incorporate the following clause, which is also set forth in 41 CFR 3–4.6013 and 3–4.6014.

(a) *Amount of advance.* At the request of the contractor, and subject to the conditions hereinafter set forth, the Government shall make an advance payment, or advance payments from time to time, to the Contractor. No advance payment shall be made (1) without the approval of the officer administering advance payments (hereinafter called the ''Administering Office'' and designated in paragraph (k)(4) hereof) to the financial necessity therefore; (2) in an amount which together, as with all advance payments theretofore made, shall exceed the amount stated in paragraph (k)(1) of this section; and (3) without a properly certified invoice or invoices.

(b) *Special Bank Account.* Until all advance payments made hereunder are liquidated and the Administering Office approves in writing the release of any funds due and payable to the Contractor, all advance payments and all other payments under the contract shall be made by check payable to the Contractor, and be marked for deposit only in a Special Bank Account with the bank designated in paragraph (k)(2) of this section. No part of the funds in the Special Bank Account shall be mingled with other funds of the contractor prior to withdrawal thereof from the Special Bank Account as hereinafter provided. Except as hereinafter provided, each withdrawal shall be made only by check of the Contractor countersigned on behalf of the Government by the Contracting Officer or such other person or persons as he may designate in writing (hereinafter called the ''Countersigning Agent''). Until

otherwise determined by the Administering Office, countersignature on behalf of the Government will not be required.

(c) *Use of funds.* The funds in the Special Bank Account may be withdrawn by the Contractor solely for the purposes of making payments for items of allowable cost or to reimburse the Contractor for such items of allowable cost, and for such other purposes as the Administering Office may approve in writing. Any interpretation required as to the proper use of funds shall be made in writing by the Administering Office.

(d) *Return of funds.* The Contractor may at any time repay all or any part of the funds advanced hereunder. Whenever so requested in writing by the Administering Office, the Contractor shall repay to the Government such part of the unliquidated balance of advance payments as shall in the opinion of the Administering Office be in excess of current requirements, or (when added to total advance previously made and liquidated) in excess of the amount specified in paragraph (k)(1) of this section. In the event the Contractor fails to repay such part of the unliquidated balance of advance payments when so requested by the Administering Office, all or any part thereof may be withdrawn from the Special Bank Account by checks payable to the Treasurer of the United States signed solely by the Countersigning Agent and applied in reduction of advance payments then outstanding hereunder.

(e) *Liquidation.* If not otherwise liquidated, the advance payments made hereunder shall be liquidated as herein provided. When the sum of all payments under this contract, other than advance payments, plus the unliquidated amount of advance payments are equal to the total estimated cost for the work under this contract or such lesser amount to which the total estimated cost under this contract may have been reduced, plus increases, if any, in this total estimated cost not exceeding, in the aggregate (including, without limitation, reimbursable costs incident to termination for cause and retrocession as estimated by the Contracting Officer), the Government shall thereafter withhold further payments to the Contractor and apply the amounts withheld against the Contractor's obligation to repay such advance payments until such advance payments shall have been fully liquidated. If upon completion, termination, or retrocession of the contract all advance payments have not been fully liquidated, the balances therefore shall be deducted from any sums otherwise due or which may become due to the Contractor from the Government, and any deficiency shall be paid by the Contractor to the Government upon demand.

(f) *Bank Agreement.* Before an advance payment is made hereunder, the Contractor shall transmit to the Administering Office, in the form prescribed by such office, an Agreement in triplicate from the bank in which the Special Bank Account is established, clearly setting forth the special character of the account and the responsibilities of the bank thereunder. Wherever possible, such bank shall be a member bank of the Federal Reserve System, or an ''insured'' bank within the meaning of the Act creating the Federal Deposit Insurance Corporation Act of August 23, 1935, 49 Stat. 685, as amended (12 U.S.C. 264).

(g) *Lien on Special Bank Account.* The Government shall have a lien upon any balance in the Special Bank Account paramount to all other liens, which lien shall secure the repayment of any advance payments made hereunder.

(h) *Lien on property under contract.* Any and all advance payments made under this contract shall be secured, when made, by a lien in favor of the Government, paramount to all other liens, upon the supplies or other things covered by this contract and on all material and other property acquired for or allocated to the performance of this contract, except to the extent that the Government by virtue of any other provision of this contract, or otherwise, shall have valid title to such supplies, materials, or other property as against other creditors of the Contractor. The Contractor shall identify, by marking or segregation, all property which is subject to a lien in favor of the Government by virtue of any provision of this contract in such a way as to indicate

that it is subject to such lien and that it has been acquired for or allocated to the performance of this contract. If for any reason such supplies, materials, or other property are not identified by marking or segregation, the Government shall be deemed to have a lien to the extent of the Government's interest under this contract on any mass of property with which such supplies, materials, or other property are commingled. The Contractor shall maintain adequate accounting control over such property on his books and records. If at time during the progress of the work on the contract it becomes necessary to deliver any item or items and materials upon which the Government has a lien as aforesaid to a third person, the Contractor shall notify such third person of the lien herein provided and shall obtain from such third person a receipt, in duplicate, acknowledging, inter alia the existence of such lien. A copy of each receipt shall be delivered by the Contractor to the Contracting Officer. If this contract is terminated in whole or in part and the Contractor is authorized to sell or retain termination inventory acquired for or allocated to this contract, such sale or retention shall be made only if approved by the Contracting Officer, which approval shall constitute a release of the Government's lien hereunder to the extent that such termination inventory is sold or retained, and to the extent that the proceeds of the sale, or the credit allowed for such retention on the Contractor's termination claim, is applied in reduction of advance payments then outstanding hereunder.

(i) *Insurance.* The Contractor represents and warrants that he is now maintaining with responsible insurance carriers, (1) insurance upon his own plant and equipment against fire and other hazards to the extent that like properties are usually insured by others operating plants and properties of similar character in the same general locality; (2) adequate insurance against liability on account of damage to persons or property; and (3) adequate insurance under all applicable workmen's compensation laws. The Contractor agrees that, until work under this contract has been completed and all advance payments made hereunder have been liquidated, he will (i) maintain such insurance; (ii) maintain adequate insurance upon any materials, parts, assemblies, subassemblies, supplies, equipment and other property acquired for or allocable to this contract and subject to the Government lien hereunder; and (iii) furnish such certificates with respect to his insurance as the Administering Office may from time to time require.

(j) *Prohibition against assignment.* Notwithstanding any other provision of this contract, the Contractor shall not transfer, pledge, or otherwise assign this contract, or any interest therein, or any claim arising thereunder, to any party or parties, bank, trust company, or other financing institution.

(k) *Designations and determinations*—(1) *Amount.* The amount of advance payments at any time outstanding hereunder shall not exceed $———.

(2) *Depository.* The bank designated for the deposit of payments made hereunder shall be:

(3) *Interest charge.* No interest shall be charged for advance payments made hereunder. The Contractor shall charge interest at the rate of 6 percent per annum on subadvances or down payments to subcontractors, and such interest will be credited to the account of the Government. However, interest need not be charged on subadvances on nonprofit subcontracts with nonprofit educational or research institutions for experimental, research or development work.

(4) *Administering Office.* The office administering advance payments shall be the office designated as having responsibility for awarding the contract.

(l) *Other security.* The terms of this contract shall be considered adequate security for advance payments hereunder, except that if at any time the administering Office deems the security furnished by the Contractor to be inadequate, the Contractor shall furnish such additional security as may be satisfactory to the Administering Office, to the extent that such additional security is available.

[40 FR 53147, Nov. 14, 1975; 44 FR 69933, Dec. 5, 1979]

§ 36.227 Recordkeeping, reporting and audit.

(a) The standard clauses regarding ''Accounts, Audit, and Records'' and ''Examination of Records'' as set forth in 41 CFR 3–4.60 apply to contracts awarded under the Act. Further, Recordkeeping will be in accordance with uniform Administrative Standards.

(b) In addition, where Federal financial assistance is involved in the contract effort, the following clause, which is also set forth in 41 CFR 3–4.60, will be incorporated as a special provision of such contracts:

REPORTS TO THE INDIAN PEOPLE

The contractor, as a recipient of Federal financial assistance, shall make reports and information available to the Indian people served or represented by the contractor. Such reports will reflect how the Federal assistance funds were utilized to the benefit of the Indian people served or represented as follows: (insert specific reporting requirements formats and method of distribution to the Indian people as may be prescribed in the scope of the contract and the Uniform Administrative Standards).

(c) *Annual reporting.* (1) For each fiscal year during which a tribal organization receives or expends funds pursuant to a contract under this subpart, the tribe which requested the contract must submit a report to the Area Director. The report shall include, but need not be limited to, an accounting of the amounts and purposes for which the contract funds were expended and information on the conduct of the program or services involved. The report shall include any other information requested by the Area Director and shall be submitted as follows:

(i) When the contract is with the governing body of an Indian tribe, the tribe shall submit the report to the Area Director.

(ii) When the contract is with a tribal organization other than the governing body of the tribe, the tribe has the option of having the tribal organization prepare the report and submit it to the tribe for review and approval before the tribe submits it to the Area Director.

(iii) When the contract benefits more than one tribe, the tribal organization shall prepare and submit the report to each of the tribes benefiting under the contract. Each tribe shall endorse the report before submitting it to the Area Director.

(2) The annual report shall be submitted to the Area Director within 60 days of the end of the fiscal year in which the contract was performed. However, the period for submitting the report may be extended if there is just cause for such extension.

(3) In addition to the yearly reporting requirement given in paragraphs (a) and (b) of this section, the tribal contractor shall furnish other reports required by the Secretary.

§ 36.228 Availability of information.

(a) Except as otherwise provided herein and so long as the release of information does not constitute an unwarranted invasion of personal privacy, a tribal contractor under this subpart shall make all reports and information concerning the contract available to the Indian people served or represented by the contractor.

(b) A contractor shall hold confidential all information obtained by personnel under the contract from persons receiving services under the contract related to their examination, care, and treatment, and shall not release such information without the individual's consent except as may be required by law, as may be necessary to provide service to the individual, or as may be necessary to monitor the operations of the program or otherwise protect the Public Health. Information may be disclosed in a form which does not identify particular individuals.

§ 36.229 Penalties.

Section 6 of Pub. L. 93–638, 25 U.S.C. 450(d) provides:

Whoever, being an officer, director, agent, or employee of, or connected in any capacity with, any recipient of a contract or subcontract pursuant to this Act or the Act of April 16, 1934 (48 Stat. 596), as amended, embezzles, willfully misapplies, steals, or obtains by fraud any of the money, funds, assets, or property which are the subject of such a contract, or subcontract, shall be fined not more than $10,000 or imprisoned for not more than two years, or both, but if the amount so embezzled, willfully misapplied, stolen, or by fraud does not exceed $100, he shall be fined not more than $1,000 or imprisoned not more than one year, or both.

§ 36.230 Contract revisions or amendments.

(a) Any contract made under this subpart may be revised or amended as deemed necessary to carry out the purposes of the program, project, or function being contracted. Those changes initiated by the Government shall be subject to the applicable contract Change Clauses prescribed in 41 CFR 3–4.6013 and 3–4.6014.

(b) However, a tribal contractor may make a written request for a revision or amendment of a contract to the Contracting Officer. Such requests will be treated in the same manner as initial Self-Determination Proposals and evaluated in accordance with the criteria specified in § 36.208 of this subpart. If the contracting officer declines revision or amendment of the contract as requested, he shall notify the tribal organization in writing within 30 days after receiving the request. Thereafter, an appeal to the Contracting Officer's declination to amend the contract will follow the same processing and procedures outlined in § 36.214 of this subpart.

§ 36.231 Retrocession of contract programs.

(a) Whenever an Indian tribe requests retrocession for any contract or portion thereof entered into under this Subpart, retrocession shall be in accordance with the clause titled ''Retrocession'' as set forth in 41 CFR 3–4.6013 and 3–4.6014, and shall be effective upon a date specified by the Contracting Officer but no later than 120 days after the date of the request from the tribe, except when the tribe and the Contracting Officer mutually agree on a later date.

(b) Immediately after a request for retrocession, representatives of the tribe and the Contracting Officer shall meet and take the following actions:

(1) Mutually agree on a plan for orderly transfer of responsibilities.

(2) Mutually agree on a plan for inventorying materials and supplies on hand.

(3) Establish an accounting of funds, current and anticipated obligations, and costs of operation until the retrocession date.

(4) Identify all records relating to the contract and to the contracted function.

(c) On the date of retrocession, the tribal contractor will deliver to the Contracting Officer all property, materials, supplies and records of whatever nature which have been identified as necessary for the continuation of the program, project or function.

(d) Within 30 calendar days after retrocession, the tribe will furnish the Contracting Officer with a report including but not limited to an accounting of the amounts and purposes for which Federal funds were expended, a description and evaluation of program accomplishments, and reasons why retrocession was requested.

(e) Retrocession of a contract by an Indian tribe shall be without prejudice to:

(1) Any other contract to which it is a party.

(2) Any other contracts it may request.

(3) Any future request to contract for the programs or services covered by the retroceded contract.

(f) Tribal assumption of retroceded contracts. Whenever an Indian tribe chooses to retrocede a contract operated by a tribal organization other than the tribal governing body, the tribal governing body may request to contract for the program. In such a case, the tribal governing body shall submit a contract proposal pursuant to this subpart.

§ 36.232 Contractor assistance.

To the extent practicable, the Director, Indian Health Service, shall, at the request of a tribal organization, provide technical assistance to the contractor in attempting to resolve problems or deficiencies in the performance of the contract and to assist the contractor in taking such corrective action as may be prescribed pursuant to § 36.233(a).

§ 36.233 Assumption and reassumption of contract programs.

(a) When the Director or his delegate determines that the performance of a contractor under these regulations involves (1) the violation of the rights or endangerment of the health, safety, or

welfare or any persons, or (2) gross negligence or the mismanagement in the handling or use of funds under the contract, he will, in writing, notify the contractor of such determination and will request that the contractor take such corrective action within such period of time as the Director or his delegate may prescribe.

(b) When the Director or his delegate determines that a contractor has not taken corrective action (as prescribed by him under paragraph (a) of this section) to his satisfaction, he may, after the contractor has been provided an opportunity for a hearing in accordance with paragraph (c) of this section, rescind the contract in whole or in part and, if he deems it appropriate, assume or resume control or operation of the program, activity, or service involved.

(c)(1) When the Director or his delegate has made a determination described in paragraph (b) of this section, he shall in writing notify the contractor of such determination and of the contractor's right to request a review of such determination and of the determination described in paragraph (a) of this section. Such notification by the Director or his delegate shall set forth the reasons for the determination in sufficient detail to enable the contractor to respond and shall inform the contractor of its right to a hearing on the record before a Contract Appeals Board described in paragraph (d) of this section. Upon the request of the contractor for a hearing, the Board, established pursuant to paragraph (d) of this section shall in writing within 10 days of the establishment notify the contractor of the time, place and date of the hearing which will be held not later than 45 days after the request for a hearing.

(2) Where the Director or his delegate determines that a contractor's performance under a contract awarded under this subpart poses an immediate threat to the safety of any person, he may immediately rescind the contract in whole or in part and, if he deems it appropriate, assume or resume control or operation of the program, activity, or service involved. Upon such a decision he will immediately notify the contractor of such action and the basis therefor; and offer the contractor an opportunity for a hearing on the record before the Contract Appeals Board established pursuant to paragraph (d) of this section to be held within 10 days of each action.

(d)(1) The Contract Appeals Board shall be composed of 3 persons appointed by the Director, Indian Health Service. Such persons may not be selected from the immediate office of any person participating in the determinations at issue. The Board shall afford the contractor the right:

(i) To notice of the issues to be considered;

(ii) To be represented by counsel;

(iii) To present witnesses on contractor's behalf;

(iv) To cross-examine other witnesses either orally or through written interrogatories; and

(v) To compel the appearance of Indian Health Service personnel or to take depositions of such persons at reasonable times and places.

(2) The Contracts Appeals Board shall make an initial written decision which shall become final with 20 days unless the Director, Indian Health Service or his representative modifies or reverses the decision. Any such decision by the Director of the Indian Health Service or his representative be in writing, shall be specific as to the reasons for such decision, and shall be considered final.

(3) Where Board is considering issues arising under paragraph (c)(2) of this section, the Board shall within 25 days after the conclusion of the hearing, notify all parties in writing of its decision, which shall be considered final.

(e) In any case where the officer has rescinded a contract under paragraphs (b) or (d) of this section, he may decline to enter into a new contract agreement with the contractor until such time as he is satisfied that the basis for the recission has been corrected.

Nothing in this section shall be construed as contravening the Occupational Safety and Health Act of 1970 (84 Stat. 1590), as amended (29 U.S.C. 651).

§ 36.234 Operation of retroceded or reassumed contracts.

(a) The IHS shall endeavor to provide to the tribe(s) and Indians served by a

retroceded or reassumed contract not less than the same quantity and quality of service it would have provided if there had been no contract.

(b) The IHS shall endeavor to provide to the tribe(s) and Indians served by a retroceded or reassumed contract not less than the same quantity and quality of permanent and temporary personnel that meet the U.S. Civil Service qualifications, it would have provided if there has been no contract.

(c) IHS officials cannot decline to accept a retroceded contract or to reassume a contract because they are unable to provide the quality and quantity of service and personnel required in paragraphs (a) and (b) of this section.

§ 36.235 Contract funds.

The tribal organization shall be entitled to be funded for direct and indirect costs at a level which is not less than would have been provided if the IHS had operated the program or portion thereof during the contract period.

§ 36.236 Unexpended funds under contract.

(a) If it becomes apparent during the contract term that the estimated amount of a contract under this subpart will be in excess of actual expenditures under the contract, the identified unexpended funds will be used to provide additional services or benefits within the scope or limitations of the contract.

(b) When both the tribal organization and the IHS agree that it is not practicable to spend all contract funds during the contract term, to the extent authorized by law unexpended funds may be carried over into the succeeding fiscal year contract. Unexpended funds carried over into a succeeding fiscal year shall be added to the contract amount for that fiscal year.

§ 36.237 Contract funding and renegotiation.

The following clause shall be included in contracts awarded under the Act which have a term of more than one year:

CONTRACT FUNDING AND RENEGOTIATION

Funds other than those appropriated during the fiscal year in which the contract commenced, that are included in the contract amount are subject to the availability of appropriations from Congress and there shall be no legal liability on the part of the Government in regard to such funds unless and until they are appropriated. Funds appropriated during the fiscal year in which the contract commenced that are included in the contract amount but not expended at the end of such fiscal year may be carried over and used for contract purposes in the succeeding fiscal year of the contracts operation or, may be used to provide additional services upon modifications of the contract to include such services therein.

Each succeeding year of the contract may be renegotiated prior to the end of the then current fiscal year in order to reflect changes that have taken place beyond the control of the contractor since the contract was originally negotiated or last renegotiated as is applicable.

Subpart J—Indian Health Care Improvement Act Programs

AUTHORITY: Secs. 102, 103, 106, 502, 702, and 704 of Pub. L. 94–437 (25 U.S.C. 1612, 1613, 1615, 1652, 1672 and 1674); sec. 338G of the Public Health Service Act, 95 Stat. 908 (42 U.S.C. 254r).

SOURCE: 42 FR 59646, Nov. 18, 1977, unless otherwise noted.

SUBDIVISION J–1—PROVISIONS OF GENERAL AND SPECIAL APPLICABILITY

§ 36.301 Policy and applicability.

(a) *Policy*. (1) It is the policy of the Secretary to encourage Indians to enter the health professions and to ensure the availability of Indian health professionals to serve Indians. The recruitment and scholarship programs under this subpart will contribute to this objective.

(2) The regulations of this subpart are intended to be consistent with principles of Indian self-determination and to supplement the responsibilities of the Indian Health Sevice for Indian health manpower planning and for assisting Indian tribes and tribal organizations in the development of Indian manpower programs.

(b) *Applicability*. The regulations of this subpart are applicable to the following activities authorized by the Indian Health Care Improvement Act:

(1) The award of health professions recruitment grants under section 102 of the Act to recruit Indians into the health professions (Subdivision J–2);

(2) The award of preparatory scholarship grants and pregraduate scholarship grants under section 103 of the Act, as amended, to Indians undertaking compensatory and preprofessional education (Subdivisions J–3 and J–8);

(3) The award of Indian Health Scholarship grants pursuant to section 338G of the Public Health Service Act (42 U.S.C. 254r) to Indian or other students in health professions schools (Subdivision J–4):

(4) The provision of continuing education allowances to health professionals employed by the Service under section 106 of the Act (Subdivision J–5);

(5) Contracts with urban Indian organizations under section 502 of the Act to establish programs in urban areas to make health services more accessible to the urban Indian population (Subdivision J–6); and

(6) Leases with Indian tribes under section 704 of the Act (Subdivision J–7).

[42 FR 59646, Nov. 18, 1977, as amended at 49 FR 7381, Feb. 29, 1984; 50 FR 1855, Jan. 14, 1985]

§ 36.302 Definitions.

As used in this subpart: (a) *Act* means the Indian Health Care Improvement Act, Pub. L. 94–437 (25 U.S.C. 1601 *et seq.*).

(b) *Academic year* means the traditional approximately 9 month September to June annual session, except for students who attend summer session in addition to the traditional academic year during a 12 month period, for whom the academic year will be considered to be of approximately 12 months duration.

(c) [Reserved]

(d) *Compensatory preprofessional education* means any preprofessional education necessary to compensate for deficiencies in an individual's prior education in order to enable that individual to qualify for enrollment in a health professions school.

(e) *Health or educational entity* means an organization, agency, or combination thereof, which has the provision of health or educational programs as one of its major functions.

(f) *Health professions school* means any of the schools defined in paragraphs (m), (n), or (o) of this section.

(g) *Hospital* means general, tuberculosis, mental, and other types of hospitals, and related facilities such as laboratories, outpatient departments, extended care facilities, facilities related to programs for home health services, self-care units, education or training facilities for health professions personnel operated as an integral part of a hospital, and central services facilities operated in connection with hospitals, but does not include any hospital providing primarily domicillary care.

(h) *Indian* or *Indians* means, for purposes of Subdivisions J–2, J–3, J–4, and J–8 of this subpart, any person who is a member of an Indian tribe, as defined in parargraph (i) of this section or any individual who (1), irrespective of whether he or she lives on or near a reservation, is a member of a tribe, band or other organized group terminated since 1940 and those recognized now or in the future by the State in which they reside, or who is the natural child or grandchild of any such member, or (2) is an Eskimo or Aleut or other Alaska Native, or (3) is considered by the Secretary of the Interior to be an Indian for any purpose, or (4) is determined to be an Indian under regulations promulgated by the Secretary.

(i) *Indian health organization* means a nonprofit corporate body composed of Indians which provides for the maximum participation of all interested Indian groups and individuals and which has the provision of health programs as its principal function.

(j) *Indian tribe* means any Indian tribe, band, nation, or other organized group or community, including any Alaska native village or group or regional or village corporation as defined in or established pursuant to the Alaska Native Claims Settlement Act (43 U.S.C. 1601 *et seq.*), which is recognized as eligible for the special programs and services provided by the United States

to Indians because of their status as Indians.

(k) *Nonprofit* as applied to any private entity means that no part of the net earnings of such entity inures or may lawfully inure to the benefit of any private shareholder or individual.

(l) [Reserved]

(m) *School of allied health professions* means a junior college, college, or university—

(1) Which provides, or can provide, programs of education leading to a certificate, or to an associate or baccalaureate degree (or the equivalent or either), or to a higher degree for preparing personnel with responsibilities for supporting, complementing, or supplementing the professional functions of physicians, dentists, and other health professionals in the delivery of health care to patients or assisting environmental engineers and others in environmental health control and preventive medicine activities.

(2) Which, if in a college or univerisity which does not include a teaching hospital or in a junior college, is affiliated through a written agreement with one or more hospitals which provide the hospital component of the clinical training required for completion of such programs of education. The written agreement shall be executed by individuals authorized to act for their respective institutions and to assume on behalf of their institution the obligations imposed by such agreement. The agreement shall provide:

(i) A description of the responsibilities of the school of allied health professions, the responsibilities of the hospital, and their joint responsibilities with respect to the clinical components of such programs of education; and

(ii) A description of the procedure by which the school of allied health professions and the hospital will coordinate the academic and clinical training of students in such programs of education; and

(iii) That, with respect to the clinical component of each such program of education, the teaching plan and resources have been jointly examined and approved by the appropriate faculty of the school of allied health professions and the staff of the hospital.

(3) Which is accredited or assured accreditation by a recognized body or bodies approved for such purpose by the Commissioner of Education of the Department of Health and Human Services.

(n) *School of medicine, school of dentistry, school of osteopathy, school of pharmacy, school of optometry, school of podiatry, school of veterinary medicine,* and *school of public health* means a school which provides training leading, respectively, to a degree of doctor of medicine, a degree of doctor of dental surgery or an equivalent degree, a degree of doctor of osteopathy, a degree of bachelor of science in pharmacy or an equivalent degree, a degree of doctor of podiatry or an equivalent degree, and graduate degree in public health, and including advanced training related to such training provided by any such school, and is accredited or assured accreditation by a recognized body or bodies approved for such purpose by the Commissioner of Education of the Department of Health and Human Services.

(o) *School of nursing* means a collegiate, associate degree, or diploma school of nursing, as those terms are defined below:

(1) The term *collegiate school of nursing* means a department, division, or other administrative unit in a college or university which provides primarily or exclusively a program of education in professional nursing and allied subjects leading to the degree of bachelor of arts, bachelor of science, bachelor of nursing, or to an equivalent degree, or to a graduate degree in nursing, and including advanced training related to such program of education provided by such school, but only if such program, or such unit, college or university is accredited;

(2) The term *associated degree school of nursing* means a department, division, or other administrative unit in a junior college, community college, college, or university which provides primarily or exclusively a two-year program of education in professional nursing and allied subjects leading to an associate degree in nursing or to an equivalent degree, but only if such program, or such unit, college or university is accredited;

(3) The term *diploma school of nursing* means a school affiliated with a hospital or university, or an independent school, which provides primarily or exclusively a program of education in professional nursing and allied subjects leading to a diploma or to equivalent indicia that such program has been satisfactorily completed, but only if such program, or such affiliated school or such hospital or university or such independent school is accredited.

(4) The term *accredited* as used in this subsection when applied to any program of nurse education means a program accredited or assured accreditation by a recognized body or bodies, or by a State agency, approved for such purpose by the Commissioner of Education of the Department of Health and Human Services and when applied to a hospital, school, college, or university (or a unit thereof) means a hospital, school, college, or university (or a unit thereof) which is accredited or assured accreditation by a recognized body or bodies, or by a State agency, approved for such purpose by the Commissioner of Education of the Department of Health and Human Services.

(p) *Secretary* means the Secretary of Health and Human Services and any other Officer or employee of the Department of Health and Human Services to whom the authority involved has been delegated.

(q) *Service* means the Indian Health Service.

(r) *State or local government* means any public health or educational entity which is included within the definition of State or local government in 45 CFR 74.3 and Indian tribes or tribal organizations.

(s) *Tribal organization* means the elected governing body of any Indian tribe or any legally established organization of Indians which is controlled by one or more such bodies or by a board of directors elected or selected by one or more such bodies (or elected by the Indian population to be served by such organization) and which includes the maximum participation of Indians in all phases of its activities.

(t) *Urban center* means any city, with a population of 10,000 or more as determined by the United States Census Bureau, which the Secretary determines has a sufficient urban Indian population with unmet health needs to warrant assistance under title V of the Act.

(u) *Urban Indian* means any individual who resides in an urban center, as defined in paragraph(s) of this section, and who meets one or more of the four criteria in paragraphs (h) (1) through (4) of this section.

(v) *Urban Indian organization* means a nonprofit corporate body situated in an urban center which:

(1) Is governed by an Indian controlled board of directors:

(2) Has the provision of health programs as:

(i) Its principal function, or

(ii) One of its major functions and such health progams are administered by a distinct organizational unit within the organization.

(3) Provides for the maximum participation of all interested Indian groups and individuals; and

(4) Is capable of legally cooperating with other public and private entities for the purpose of performing the activities described in § 36.350(a) of Subdivision J–6 of this subpart. Except, that criteria (2) and (3) of this subsection shall not apply to an organization administering an urban Indian health project under a contract with the Secretary prior to October 1, 1977, for the period of such contract or until July 1, 1978, whichever is later.

[42 FR 59646, Nov. 18, 1977, as amended at 49 FR 7381, Feb. 29, 1984; 50 FR 1855, Jan. 14, 1985]

§ 36.303 Indians applying for scholarships.

(a) For purposes of scholarship grants under Subdivisions J–3 and J–4 of this subpart, Indian applicants must submit evidence of their tribal membership (or other evidence that that applicant is an Indian as defined in paragraph (h) of § 36.302 of this subdivision) satisfactory to the Secretary.

(b) Where an applicant is a member of a tribe recognized by the Secretary of the Interior, the applicant must submit evidence of his or her tribal membership, such as:

(1) Certification of tribal enrollment by the Secretary of the Interior acting

through the Bureau of Indian Affairs (BIA); or

(2) In the absence of such BIA certification, documentation that the applicant meets the requirements of tribal membership as prescribed by the charter, articles of incorporation or other legal instrument of the tribe and has been officially designated a tribal member by an authorized tribal official; or

(3) Other evidence of tribal membership satisfactory to the Secretary.

(c) Where the applicant is a member of a tribe terminated since 1940 or a State recognized tribe, the applicant must submit documentation that the applicant meets the requirements of tribal membership as prescribed by the charter, articles of incorporation or other legal instrument of the tribe and has been officially designated a tribal member by an authorized tribal official; or other evidence, satisfactory to the Secretary, that the applicant is a member of the tribe. In addition, if the terminated or State recognized tribe of which the applicant is a member is not on a list of such tribes published by the Secretary in the FEDERAL REGISTER. the applicant must submit documentation as may be required by the Secretary that the tribe is a tribe terminated since 1940 or is recognized by the State in which the tribe is located in accordance with the law of that State.

(d) An applicant who is not a tribal member, but who is a natural child or grandchild of a tribal member as defined in paragraph (h) of § 36.302 of this subdivision must submit evidence of such fact which is satisfactory to the Secretary, in addition to evidence of his or her parent's or grandparent's tribal membership in accordance with paragraphs (b) and (c) of this section.

§ 36.304 Publication of a list of allied health professions.

The Secretary, acting through the Service, shall publish from time to time in the FEDERAL REGISTER a list of the allied health professions for consideration for the award of preparatory and Indian Health scholarships under subdivisions J–3 and J–4 of this Subpart, based upon his determination of the relative needs of Indians for additional service in specific allied health professions. In making that determination, the needs of the Service will be given priority consideration.

§ 36.305 Additional conditions.

The Secretary may, with respect to any grant award under this subpart, impose additional conditions prior to or at the time of any award when in his judgment such conditions are necessary to assure or protect advancement of the approved project, the interests of the public health, or the conservation of grant funds.

NOTE: *Nondiscrimination.* Grants and contracts under this subpart are exempted from the requirements of section 601 of the Civil Rights Act of 1964 (42 U.S.C. 2000d), prohibiting discrimination on the basis of race, color or national origin, by regulation at 45 CFR 80.3(d) which provides, with respect to Indian Health Services, that ''An individual shall not be deemed subjected to discrimination by reason of his exclusion from the benefits of a program limited by Federal law to individuals of a particular race, color, or national origin different from his.''

[42 FR 59646, Nov. 18, 1977, as amended at 50 FR 1855, Jan. 14, 1985]

SUBDIVISION J–2—HEALTH PROFESSIONS RECRUITMENT PROGRAM FOR INDIANS

§ 36.310 Health professions recruitment grants.

Grants awarded under this subdivision, in accordance with section 102 of the Act, are for the purpose of assisting in meeting the costs of projects to:

(a) Identify Indians with a potential for education or training in the health professions and encouraging and assisting them (1) To enroll in schools of medicine, osteopathy, dentistry, veterinary medicine, optometry, podiatry, pharmacy, public health, nursing, or allied health professions; or (2), if they are not qualified to enroll in any such school, to undertake such post-secondary education or training as may be required to qualify them for enrollment;

(b) Publicize existing sources of financial aid available to Indians enrolled in any school referred to in paragraph (a)(1) of this section or who are undertaking training necessary to qualify them to enroll in any such school; or

(c) Establish other programs which the Secretary determines will enhance and facilitate the enrollment of Indians, and the subsequent pursuit and completion by them of courses of study, in any school referred to in paragraph (a)(1) of this section.

§ 36.311 Eligibility.

Any Indian tribe, tribal organization, urban Indian organization, Indian health organization or any public or other nonprofit private health or educational entity is eligible to apply for a health professions recruitment grant under this subdivision.

§ 36.312 Application.

(a) Forms for applying for grants are governed by 45 CFR part 74, subpart N.[1]

(b) In addition to such other pertinent information as the Secretary may require, the application for a health professions recruitment grant shall contain the following:

(1) A description of the legal status and organization of the applicant;

(2) A description of the current and proposed participation of Indians (if any) in the applicant's organization.

(3) A description of the target Indian population to be served by the proposed project and the relationship of the applicant to that population;

(4) A narrative description of the nature, duration, purpose, need for and scope of the proposed project and of the manner in which the applicant intends to conduct the project including:

(i) Specific measurable objectives for the proposed project;

(ii) How the described objectives are consistent with the purposes of section 102 of the Act;

(iii) The work and time schedules which will be used to accomplish each of the objectives;

(iv) A description of the administrative, managerial, and organizational arrangements and the facilities and resources to be utilized to conduct the proposed project;

(v) The name and qualifications of the project director or other individual responsible for the conduct of the project; the qualifications of the prinicipal staff carrying out the project; and a description of the manner in which the applicant's staff is or will be organized and supervised to carry out the proposed project;

(5) An itemized budget for the budget period (normally 12 months) for which support is sought and justification of the amount of grant funds requested:

(6) The intended financial participation, if any, of the applicant in the proposed project specifying the type of contributions such as cash or services, loans of full or part-time staff, equipment, space, materials or facilities or other contributions;

(7) When the target population of a proposed project includes a particular Indian tribe or tribes, an official document in such form as is prescribed by the tribal governing body of each such tribe indicating that the tribe or tribes will cooperate with the applicant.

(c) In the case of proposed projects for identification of Indians with a potential for education or training in the health professions, applications must include a method of assessing the potential of interested Indians for undertaking necessary education or training in the health professions. Proposed projects may include, but are not limited to, the following activities:

(1) Identifying Indian elementary and secondary school students through observations, aptitude or other testing, academic performance, performance in special projects and activities, and other methods as may be designed or developed;

(2) Identifying Indians in college or university programs, related employment, upward mobility programs or other areas of activity indicative of interest and potential;

(3) Review of the upward mobility plans, skills, banks etc. of organizations employing Indians to identify individuals with appropriate career orientations, expression of interest, or recognized potential;

(4) Conducting workshops, health career days, orientation projects or other activities to identify interested Indians at any age level;

[1] Applications and instructions may be obtained from the appropriate Indian Health Service Area or Program Office or by writing the Director, Indian Health Service, Room 5A–55, 5600 Fishers Lane, Rockville, MD 20857.

(5) Performing liaison activities with Indian professional organizations, Indian education programs (including adult education), Indian school boards, Indian parent, youth recreation or community groups, or other Indian special interest or activity groups;

(6) Identifying those Indians with an interest and potential who cannot undertake compensatory education or training in the health professions because of financial need.

(d) Proposed projects designed to encourage and assist Indians to enroll in health professions schools; or, if not qualified to enroll, to undertake post-secondary education or training required to qualify them for enrollment may include, but are not limited to, the following activities:

(1) Providing technical assistance and counseling to encourage and assist Indians identified as having a potential for education or training in the health professions—

(i) To enroll in health professions schools.

(ii) To undertake any post-secondary education and training required to qualify them to enroll in health professions schools, and

(iii) To obtain financial aid to enable them to enroll in health professions schools or undertake post-secondary education or training required to qualify them to enroll in such schools;

(2) Conducting programs to (i) identify factors such as deficiencies in basic communication, research, academic subject matter (such as science, mathematics, etc.), or other skills which may prevent or discourage Indians from enrolling in health professions schools or undertaking the post-secondary education or training required to qualify them to enroll, and (ii) provide counseling and technical assistance to Indians to assist them in undertaking the necessary education, training or other activities to overcome such factors.

(e) Proposed projects to publicize existing kinds of financial aid available to Indians enrolled in health professions schools or to Indians undertaking training necessary to qualify them to enroll in such schools may include, but are not limited to, the following activities:

(1) Collecting information on available sources of financial aid and disseminating such information to Indian students, Indians, recruited under programs assisted by grants under this subdivision and to Indian tribes, tribal organizations, urban Indian organizations, Indian health organizations and other interested groups and communities throughout the United States;

(2) Providing information on available sources of financial aid which can be utilized by programs and counselors assisting Indians to obtain financial aid.

(f) Proposed projects for establishment of other programs which will enhance or facilitate enrollment of Indians in health professions schools and the subsequent pursuit and completion by them of courses of study in such schools may include, but are not limited to, the following activities:

(1) Compilation and dissemination of information on—

(i) Health professions education or training programs and the requirements for enrollment in such programs; and

(ii) Post-secondary education or training curricula and programs designed to qualify persons for enrollment in health professions schools;

(2) Developing and coordinating career orientation programs in local schools (including high schools) and colleges and universites;

(3) Developing programs to enable Indians to gain exposure to the health professions such as arranging for (i) visits to health care facilities and programs and meetings or seminars with health professionals, (ii) part-time summer or rotating employment in health care facilities, programs, or offices of health professionals, (iii) volunteer programs, or (iv) other means of providing such exposure;

(4) Developing programs which relate tribal culture and tradition, including native medicine, to careers in the health professions; and

(5) Developing programs to make Indians aware of projected health manpower needs, expected employment opportunities in the health professions, and other factors in order to orient and

motivate Indians to pursue careers in the health professions.

[42 FR 59646, Nov. 18, 1977, as amended at 50 FR 1855, Jan. 14, 1985]

§ 36.313 Evaluation and grant awards.

(a) Within the limits of funds available for such purpose, the Secretary, acting through the Service, may award health professions recruitment grants to those eligible applicants whose proposed projects will in his judgment best promote the purposes of section 102 of the Act, taking into consideration:

(1) The potential effectiveness of the proposed project in carrying out such purposes;

(2) The capability of the applicant to successfully conduct the project;

(3) The accessibility of the applicant to target Indian communities or tribes, including evidence of past or potential cooperation between the applicant and such communities or tribes;

(4) The relationship of project objectives to known or anticipated Indian health manpower deficiencies;

(5) The soundness of the fiscal plan for assuring effective utilization of grant funds;

(6) The completeness of the application.

(b) Preference shall be given to applicants in the following order or priority: (1) Indian tribes, (2) tribal organizations, (3) urban Indian organizations and other Indian health organizations, and (4) public and other nonprofit profit private health or educational entities.

(c) The Notice of Grant Awards specifies how long the Secretary intends to support the project period without requiring the project to re-compete for funds. This period, called the project period, will usually be for one to two years. The total project period comprises the original project period and any extension. Generally the grant will be for a one year budget period, any subsequent award will also be a one year budget period. A grantee must submit a separate application for each subsequent year. Decisions regarding continuation awards and the funding level of such awards will be made after consideration of such factors as the grantee's progress and management practices, and the availability of funds. In all cases, awards require a determination by the Secretary that funding is in the best interest of the Federal Government.

(d) Neither the approval of any application nor the award of any grant commits or obligates the Federal Government in any way to make any additional, supplemental, continuation, or other award with respect to any approved application or portion of an approved application.

[42 FR 59646, Nov. 18, 1977, as amended at 50 FR 1855, Jan. 14, 1985]

§ 36.314 Use of funds.

A grantee shall only spend funds it receives under this subpart according to the approved application and budget, the regulations of this subpart, the terms and conditions of the award, and the applicable cost principles prescribed in subpart Q of 45 CFR part 74.

[50 FR 1855, Jan. 14, 1985]

§ 36.315 Publication of list of grantees and projects.

The Secretary acting through the Service shall publish annually in the FEDERAL REGISTER a list of organizations receiving grants under this subdivision including for each grantee:

(a) The organization's name and address;

(b) The amount of the grant;

(c) A summary of the project's purposes and its geographic location.

§ 36.316 Other HHS regulations that apply.

Several other regulations apply to grants under this subdivision. These include but are not limited to:

42 CFR part 50, subpart D, Public Health Service grant appeals procedure

42 CFR part 16, Procedures of the Departmental Grant Appeals Board

45 CFR part 74, Administration of grants

45 CFR part 75, Informal grant appeals procedures

45 CFR part 84, Nondiscrimination on the basis of handicap in programs and activities receiving or benefiting from Federal financial assistance

45 CFR part 86, Nondiscrimination on the basis of sex in education programs and activities receiving or benefiting from Federal financial assistance

45 CFR part 91, Nondiscrimination on the basis of age in HHS programs or activities receiving Federal financial assistance

[50 FR 1855, Jan. 14, 1985]

SUBDIVISION J–3—HEALTH PROFESSIONS PREPARATORY SCHOLARSHIP PROGRAM FOR INDIANS

§ 36.320 Preparatory scholarship grants.

Scholarship grants may be awarded under this subdivision and section 103 of the act for the period (not to exceed two academic years) necessary to complete a recipient's compensatory preprofessional education to enable the recipient to qualify for enrollment or re-enrollment in a health professions school. Examples of individuals eligible for such grants are the individual who:

(a) Has completed high school equivalency and needs compensatory preprofessional education to enroll in a health professions school;

(b) Has a baccalaureate degree and needs compensatory preprofessional education to qualify for enrollment in a health professions school; or

(c) Has been enrolled in a health professions school but is no longer so enrolled and needs preprofessional education to qualify for readmission to a health professions school.

§ 36.321 Eligibility.

To be eligible for a preparatory scholarship grant under this subdivision an applicant must:

(a) Be an Indian;

(b) Have successfully completed high school education or high school equivalency;

(c) Have demonstrated to the satisfaction of the Secretary the desire and capability to successfully complete courses of study in a health professions school;

(d) Be accepted for enrollment in or be enrolled in any compensatory preprofessional education course or curriculum meeting the criteria in § 36.320 of this subdivision; and

(e) Be a citizen of the United States.

§ 36.322 Application and selection.

(a) An application for a preparatory scholarship grant under this subdivision shall be submitted in such form and at such time as the Secretary acting through the Service may prescribe.[1] However, an application must indicate:

(1) The health profession which the applicant wishes to enter, and

(2) Whether the applicant intends to provide health services to Indians upon completion of health professions education or training by serving as described in § 36.332 or otherwise as indicated on the application.

(b) Within the limits of funds available for the purpose, the Secretary, acting through the Service, shall make scholarship grant awards for a period not to exceed two academic years of an individual's compensatory preprofessional education to eligible applicants taking into consideration:

(1) Academic performance;

(2) Work experience;

(3) Faculty recommendations;

(4) Stated reasons for asking for the scholarship; and

(5) The relative needs of the Service and Indian health organizations for persons in specific health professions.

[42 FR 59646, Nov. 18, 1977, as amended at 49 FR 7381, Feb. 29, 1984]

§ 36.323 Scholarship and tuition.

(a) Scholarship grant awards under this subdivision shall consist of:

(1) A stipend of $400 per month adjusted in accordance with paragraph (c) of this section; and

(2) An amount determined by the Secretary for transportation, tuition, fees, books, laboratory expenses, and other necessary educational expenses.

(b) The portion of the scholarship for the costs of tuition and fees as indicated in the grant award will be paid directly to the school upon receipt of an invoice from the school. The stipend and remainder of the scholarship grant award will be paid monthly to the grantee under the conditions specified in the grant award.

(c) The amount of the monthly stipend specified in paragraph (a)(1) of this section shall be adjusted by the

[1] Applications and instructions may be obtained from the appropriate Indian Health Service Area or Program Office.

Secretary for each academic year ending in a fiscal year beginning after September 30, 1978, by an amount (rounded down to the next lowest multiple of $1) equal to the amount of such stipend multiplied by the overall percentage (as set forth in the report transmitted to the Congress under section 5305 of title 5, United States Code) of the adjustment in the rates of pay under the General Schedule made effective in the fiscal year in which such academic year ends.

[42 FR 59646, Nov. 18, 1977, as amended at 49 FR 7381, Feb. 29, 1984]

§ 36.324 Availability of list of recipients.

The Indian Health Service will provide to any persons requesting it a list of the recipients of scholarship grants under this subdivision, including the school attended and tribal affiliation of each recipient.

[49 FR 7381, Feb. 29, 1984]

SUBDIVISION J–4—INDIAN HEALTH SCHOLARSHIP PROGRAM

§ 36.330 Indian health scholarships.

Indian Health Scholarships will be awarded by the Secretary pursuant to 338A through 339G of the Public Health Service Act, and such implementing regulations as may be promulgated by the Secretary except as set out in this subdivision for the purpose of providing scholarships to Indian and other students at health professions schools in order to obtain health professionals to serve Indians.

[42 FR 59646, Nov. 18, 1977, as amended at 50 FR 1855, Jan. 14, 1985]

§ 36.331 Selection.

(a) The Secretary, acting through the Service, shall determine the individuals who receive Indian Health Scholarships.

(b) Priority shall be given to applicants who are Indians.

§ 36.332 Service obligation.

The service obligation provided in section 338G(b)(2) of the Public Health Service Act shall be met by the recipient of an Indian Health Scholarship by service in:

(a) The Indian Health Service.

(b) An urban Indian organization assisted under Subdivision J–6.

(c) In private practice of his or her profession if, the practice (1) is situated in a health manpower shortage area, designated under section 332 of the Public Health Service Act and (2) addresses the health care needs of a substantial number of Indians as determined by the Secretary in accordance with guidelines of the Service.

[42 FR 59646, Nov. 18, 1977, as amended at 50 FR 1855, Jan. 14, 1985]

§ 36.333 Distribution of scholarships.

The Secretary, acting through the Service, shall determine the distribution of Indian Health Scholarships among the health professions based upon the relative needs of Indians for additional service in specific health professions. In making that determination the needs of the Service will be given priority consideration. The following factors will also be considered:

(a) The professional goals of recipients of scholarships under section 103 of the Indian Health Care Improvement Act; and

(b) The professional areas of study of Indian applicants.

§ 36.334 Publication of a list of recipients.

The Secretary, acting through the Service, will publish annually in the FEDERAL REGISTER a list of recipients of Indian Health Scholarships, including the name of each recipient, tribal affiliation if applicable, and school.

SUBDIVISION J–5—CONTINUING EDUCATION ALLOWANCES

§ 36.340 Provision of continuing education allowances.

In order to encourage physicians, dentists and other health professionals to join or continue in the Service and to provide their services in the rural and remote areas where a significant portion of the Indian people reside, the Secretary, acting through the Service, may provide allowances to health professionals, employed in the Service in order to enable them to leave their duty stations for not to exceed 480 hours of professional consultation and

refresher training courses in any one year.

SUBDIVISION J–6—CONTRACTS WITH URBAN INDIAN ORGANIZATIONS

§ 36.350 Contracts with Urban Indian organizations.

(a) The Secretary, acting through the Service, to the extent that funds are available for the purpose, shall contract with urban Indian organizations selected under § 36.351 of this subdivision to carry out the following activities in the urban centers where such organizations are situated:

(1) Determine the population of urban Indians which are or could be recipients of health referral or care services;

(2) Identify all public and private health service resources within the urban center in which the organization is situated which are or may be available to urban Indians;

(3) Assist such resources in providing service to such urban Indians;

(4) Assist such urban Indians in becoming familiar with and utilizing such resources;

(5) Provide basic health education to such urban Indians;

(6) Establish and implement manpower training programs to accomplish the referral and education tasks set forth in paragraphs (a)(3) through (5) of this section;

(7) Identify gaps between unmet health needs of urban Indians and the resources available to meet such needs;

(8) Make recommendations to the Secretary and Federal, State, local, and other resource agencies on methods of improving health service programs to meet the needs of urban Indians; and

(9) Prove or contract for health care services to urban Indians where local health delivery resources are not available, not accessible, or not acceptable to the urban Indians to be served.

(b) Contracts with urban Indian organizations pursuant to this title shall be in accordance with all Federal contracting laws and regulations except that, in the discretion of the Secretary, such contracts may be negotiated without advertising and need not conform to the provisions of the Act of August 24, 1935 as amended, (The Miller Act, 40 U.S.C. 270a *et seq.* which is concerned with bonding requirements).

(c) Payments under contracts may be made in advance or by way of reimbursement and in such installments and on such conditions as the Secretary deems necessary to carry out the purposes of title V of the Act.

(d) Notwithstanding any provision of law to the contrary, the Secretary may, at the request or consent of an urban Indian organization, revise or amend any contract made by him with such organization pursuant to this subdivision as necessary to carry out the purposes of title V of this Act: Provided, however, that whenever an urban Indian organization requests retrocession of the Secretary for any such contract, retrocession shall become effective upon a date specified by the Secretary not more than one hundred and twenty days from the date of the request by the organization or at such later date as may be mutually agreed to by the Secretary and the organization.

(e) In connection with any contract made pursuant to this subdivision, the Secretary may permit an urban Indian organization to utilize, in carrying out such contract, existing facilities owned by the Federal Government within his jurisdiction under such terms and conditions as may be agreed upon for their use and maintenance.

§ 36.351 Application and selection.

(a) Proposals for contracts under this subdivision shall be submitted in such form and manner and at such time as the Secretary acting through the Service may prescribe.

(b) The Secretary, acting through the Service shall select urban Indian organizations with which to contract under this subdivision whose proposals will in his judgment best promote the purposes of title V of the Act taking into consideration the following factors:

(1) The extent of the unmet health care needs of the urban Indians in the urban center involved determined on the basis of the latest available statistics on disease incidence and prevalence, life expectancy, infant mortality, dental needs, housing conditions, family income, unemployment statistics, etc.

(2) The urban Indian population which is to receive assistance in the following order of priority:

(i) 9,000 or more;

(ii) 4,500 to 9,000;

(iii) 3,000 to 4,500;

(iv) 1,000 to 3,000;

(v) Under 1,000.

(3) The relative accessibility which the urban Indian population to be served has to health care services, in the urban center. Factors to be considered in determining relative accessibility include:

(i) Cultural barriers;

(ii) Discrimination against Indians;

(iii) Inability to pay for health care;

(iv) Lack of facilities which provide free care to indigent persons;

(v) Lack of state or local health programs;

(vi) Technical barriers created by State and local health agencies;

(vii) Availability of transportation to health care services;

(viii) Distance between Indian residences and the nearest health care facility.

(4) The extent to which required activities under § 36.350(a) of this subdivision would duplicate any previous or current public or private health services projects in the urban center funded by another source. Factors to be considered in determining duplication include:

(i) Urban Indian utilization of existing health services funded by other sources;

(ii) Urban Indian utilization of existing health services delivered by an urban Indian organization funded by other sources.

(5) The appropriateness and likely effectiveness of the activities required in § 36.350(a) of this subdivision in the urban center involved.

(6) The capability of the applicant urban Indian organization to perform satisfactorily the activities required in § 36.350(a) of this subdivision and to contract with the Secretary.

(7) The extent of existing or likely future participation in the activities required in § 36.350(a) of this subdivision by appropriate health and health related Federal, State, local, and other resource agencies.

(8) Whether the city has an existing urban Indian health program.

(9) The applicant organization's record of performance, if any, in regard to any of the activities required in § 36.350(a) of this subdivision.

(10) Letters demonstrating local support for the applicant organization from both the Indian and non-Indian communities in the urban center involved.

[42 FR 59646, Nov. 18, 1977; 42 FR 61861, Dec. 7, 1977]

§ 36.352 Fair and uniform provision of services.

Contracts with urban Indian organizations under this subdivision shall incorporate the following clause:

The Contractor agrees, consistent with medical need, and the efficient provision of medical services to make no discriminatory distinctions against Indian patients or beneficiaries of this contract which are inconsistent with the fair and uniform provision of services.

§ 36.353 Reports and records.

For each fiscal year during which an urban Indian organization receives or expends funds pursuant to a contract under this title, such organization shall submit to the Secretary a report including information gathered pursuant to § 36.350(a) (7) and (8) of this subdivision, information on activities conducted by the organization pursuant to the contract, an accounting of the amounts and purposes for which Federal funds were expended, and such other information as the Secretary may request. The reports and records of the urban Indian organization with respect to such contract shall be subject to audit by the Secretary and the Comptroller General of the United States.

SUBDIVISION J–7—LEASES WITH INDIAN TRIBES

§ 36.360 Leases with Indian tribes.

(a) Any land or facilities otherwise authorized to be acquired, constructed, or leased to carry out the purposes of the Act may be leased or subleased from Indian tribes for periods not in excess of twenty years.

(b) Leases entered into pursuant to paragraph (a) shall be subject to the requirements of section 322 of the Economy Act (40 U.S.C. 278a), which limits expenditures for rent and alterations, improvements and repairs on leased buildings.

SUBDIVISION J–8—HEALTH PROFESSIONS PREGRADUATE SCHOLARSHIP PROGRAM FOR INDIANS

SOURCE: 49 FR 7381, Feb. 29, 1984, unless otherwise noted.

§ 36.370 Pregraduate scholarship grants.

(a) Pregraduate scholarship grants may be awarded under this subdivision and section 103 of the Act for the period (not to exceed four academic years) necessary to complete a recipient's pregraduate education leading to a baccalaureate degree in a premedicine, preoptometry, predentistry, preosteopathy, preveterinary medicine, or prepodiatry curriculum or equivalent.

(b) Students enrolled in accredited health professional or allied health professional programs which lead to eligibility for licensure, certification, registration or other types of credentials required for the practice of a health or allied health profession are ineligible for scholarships under this subdivision. Examples of health professions and allied health professions that will not be considered for funding include but are not limited to: nursing, audiology, medical technology, dental hygiene, dental technicians, engineering, radiologic technology, dietitian, nutritionist, social work, health education, physical therapy, occupational therapy and pharmacy. Scholarships for students in these programs are provided under Subdivision J–4 of this subpart.

§ 36.371 Eligibility.

To be eligible for a pregraduate scholarship grant under this subdivison an applicant must:

(a) Be an Indian;

(b) Have successfully completed high school education or high school equivalency;

(c) Have demonstrated to the satisfaction of the Secretary the desire and capability to successfully complete courses of study in a pregraduate education program meeting the criteria in § 36.370;

(d) Be accepted for enrollment in or be enrolled in any accredited pregraduate education curriculum meeting the criteria in § 36.370 of this subdivision; and

(e) Be a citizen of the United States.

§ 36.372 Application and selection.

(a) An application for a pregraduate scholarship grant under this subdivision shall be submitted in such form and at such time as the Secretary may prescribe. However, an application must indicate:

(1) The pregraduate program in which the applicant is or wishes to enter, and

(2) Whether the applicant intends to provide health services to Indians upon completion of health professions education or training by serving as described in § 36.332 or otherwise as indicated on the application.

(b) Within the limits of available funds, the Director, IHS, shall make pregraduate scholarship grant awards for a period not to exceed four academic years of an individual's pregraduate education to eligible applicants taking into consideration:

(1) Academic performance;

(2) Work experience;

(3) Faculty or employer recommendation;

(4) Stated reasons for asking for the scholarship; and

(5) The relative needs of the IHS and Indian health organizations for persons in specific health professions.

(Approved by the Office of Management and Budget under control number 0915–0080)

§ 36.373 Scholarship and tuition.

(a) Scholarship grant awards under this subdivision shall consist of:

(1) A stipend of $400 per month adjusted in accordance with paragraph (c) of this section; and

(2) An amount determined by the Secretary for transportation, tuition, fees, books, laboratory expenses and other necessary educational expenses.

(b) The portion of the scholarship for the costs of tuition and fees as indicated in the grant award will be paid directly to the school upon receipt of an invoice from the school. The stipend and remainder of the scholarship grant award will be paid monthly to the grantee under the conditions specified in the grant award.

(c) The amount of the monthly stipend specified in paragraph (a)(1) of this section shall be adjusted by the Secretary for each academic year ending in a fiscal year beginning after September 30, 1978, by an amount (rounded down to the next lowest multiple of $1) equal to the amount of such stipend multiplied by the overall percentage (as set forth in the report transmitted to the Congress under section 5305 of title 5, United States Code) of the adjustment in the rates of pay under the General Schedule made effective in the fiscal year in which such academic year ends.

§ 36.374 Availability of list of recipients.

The IHS will provide to any person requesting it a list of the recipients of scholarship grants under this subdivision, including the school attended and tribal affiliation of each recipient.

PART 37—SPECIFICATIONS FOR MEDICAL EXAMINATIONS OF UNDERGROUND COAL MINERS

Subpart—Chest Roentgenographic Examinations

Sec.
37.1 Scope.
37.2 Definitions.
37.3 Chest roentgenograms required for miners.
37.4 Plans for chest roentgenographic examinations.
37.5 Approval of plans.
37.6 Chest roentgenographic examinations conducted by the Secretary.
37.7 Transfer of affected miner to less dusty area.
37.8 Roentgenographic examination at miner's expense.
37.20 Miner identification document.

SPECIFICATIONS FOR PERFORMING CHEST ROENTGENOGRAPHIC EXAMINATIONS

37.40 General provisions.
37.41 Chest roentgenogram specifications.
37.42 Approval of roentgenographic facilities.
37.43 Protection against radiation emitted by roentgenographic equipment.

SPECIFICATIONS FOR INTERPRETATION, CLASSIFICATION, AND SUBMISSION OF CHEST ROENTGENOGRAMS

37.50 Interpreting and classifying chest roentgenograms.
37.51 Proficiency in the use of systems for classifying the pneumoconioses.
37.52 Method of obtaining definitive interpretations.
37.53 Notification of abnormal roentgenographic findings.
37.60 Submitting required chest roentgenograms and miner identification documents.

REVIEW AND AVAILABILITY OF RECORDS

37.70 Review of interpretations.
37.80 Availablity of records.

Subpart—Autopsies

37.200 Scope.
37.201 Definitions.
37.202 Payment for autopsy.
37.203 Autopsy specifications.
37.204 Procedure for obtaining payment.

AUTHORITY: Sec. 203, 83 Stat. 763; 30 U.S.C. 843, unless otherwise noted.

SOURCE: 43 FR 33715, Aug. 1, 1978, unless otherwise noted.

Subpart—Chest Roentgenographic Examinations

§ 37.1 Scope.

The provisions of this subpart set forth the specifications for giving, interpreting, classifying, and submitting chest roentgenograms required by section 203 of the act to be given to underground coal miners and new miners.

§ 37.2 Definitions.

Any term defined in the Federal Mine Safety and Health Act of 1977 and not defined below shall have the meaning given it in the act. As used in this subpart:

(a) *Act* means the Federal Mine Safety and Health Act of 1977 (30 U.S.C. 801, *et seq.*).

(b) *ALOSH* means the Appalachian Laboratory for Occupational Safety and Health, Box 4258, Morgantown, WV 26505. Although the Division of Respiratory Disease Studies, National Institute for Occupational Safety and

Health, has programmatic responsibility for the chest roentgenographic examination program, the Institute's facility in Morgantown—ALOSH—is used throughout this subpart in referring to the administration of the program.

(c) *Chest roentgenogram* means a single posteroanterior roentgenographic projection or radiograph of the chest at full inspiration recorded on roentgenographic film.

(d) *Convenient time and place* with respect to the conduct of any examination under this subpart means that the examination must be given at a reasonable hour in the locality in which the miner resides or a location that is equally accessible to the miner. For example, examinations at the mine during, immediately preceding, or immediately following work and a ''no appointment'' examination at a medical facility in a community easily accessible to the residences of a majority of the miners working at the mine, shall be considered of equivalent convenience for purposes of this paragraph.

(e) *Institute* and *NIOSH* mean the National Institute for Occupational Safety and Health Center for Disease Control, Public Health Service, Department of Health and Human Services.

(f) *ILO–U/C Classification* means the classification of radiographs of the pneumoconioses devised in 1971 by an international committee of the International Labor Office and described in ''Medical Radiography and Photography,'' volume 48, No. 3, December 1972. ''ILO Classification'' means the classification of radiographs of the pneumoconioses revised in 1980 by an international committee of the International Labor Office and described in ''Medical Radiography and Photography'' volume 57, No. 1, 1981, and in ILO publication 22 (revised 1980) from the ILO Occupational Safety and Health Series.

(g) *Miner* means any individual including any coal mine construction worker who is working in or at any underground coal mine, but does not include any surface worker who does not have direct contact with underground coal mining or with coal processing operations.

(h) *Operator* means any owner, lessee, or other person who operates, controls, or supervises an underground coal mine or any independent contractor performing services or construction at such mine.

(i) *Panel of 'B' Readers* means the U.S. Public Health Service Consultant Panel of ''B'' Readers, c/o ALOSH, P.O. Box 4258, Morgantown, WV 26505.

(j) *Preemployment physical examination* means any medical examination which includes a chest roentgenographic examination given in accordance with the specifications of this subpart to a person not previously employed by the same operator or at the same mine for which that person is being considered for employment.

(k) *Secretary* means the Secretary of Health and Human Services and any other officer or employee of the Department of Health and Human Services to whom the authority involved may be delegated.

(l) *MSHA* means the Mine Safety and Health Administration, Department of Labor.

[43 FR 33715, Aug. 1, 1978, as amended at 49 FR 7563, Mar. 1, 1984]

§37.3 Chest roentgenograms required for miners.

(a) *Voluntary examinations.* Every operator shall provide to each miner who is employed in or at any of its underground coal mines and who was employed in underground coal mining prior to December 30, 1969, or who has completed the required examinations under §37.3(b) an opportunity for a chest roentgenogram in accordance with this subpart:

(1) Following August 1, 1978 ALOSH will notify the operator of each underground coal mine of a period within which the operator may provide examinations to each miner employed at its coal mine. The period shall begin no sooner than the effective date of these regulations and end no later than a date specified by ALOSH separately for each coal mine. The termination date of the period will be approximately 5 years from the date of the first examination which was made on a miner employed by the operator in its coal mine under the former regulations of this subpart adopted July 27, 1973.

Within the period specified by ALOSH for each mine, the operator may select a 6-month period within which to provide examinations in accordance with a plan approved under § 37.5.

Example: ALOSH finds that between July 27, 1973, and March 31, 1975, the first roentgenogram for a miner who was employed at mine Y and who was employed in underground coal mining prior to December 30, 1969, was made on January 1, 1974. ALOSH will notify the operator of mine Y that the operator may select and designate on its plan a 6-month period within which to offer its examinations to its miners employed at mine Y. The 6-month period shall be scheduled between August 1, 1978 and January 1, 1979 (5 years after January 1, 1974).

(2) For all future voluntary examinations, ALOSH will notify the operator of each underground coal mine when sufficient time has elapsed since the end of the previous 6-month period of examinations. ALOSH will specify to the operator of each mine a period within which the operator may provide examinations to its miners employed at its coal mine. The period shall begin no sooner than 3½ years and end no later than 4½ years subsequent to the ending date of the previous 6-month period specified for a coal mine either by the operator on an approved plan or by ALOSH if the operator did not submit an approved plan. Within the period specified by ALOSH for each mine, the operator may select a 6-month period within which to provide examinations in accordance with a plan approved under § 37.5.

Example: ALOSH finds that examinations were previously provided to miners employed at mine Y in a 6-month period from July 1, 1979, to December 31, 1979. ALOSH notifies the operator at least 3 months before July 1, 1983 (3½ years after December 31, 1979) that the operator may select and designate on its plan the next 6-month period within which to offer examinations to its miners employed at mine Y. The 6-month period shall be scheduled between July 1, 1983, and July 1, 1984 (between 3½ and 4½ years after December 31, 1979).

(3) Within either the next or future period(s) specified by ALOSH to the operator for each of its coal mines, the operator of the coal mine may select a different 6-month period for each of its mines within which to offer examinations. In the event the operator does not submit an approved plan, ALOSH will specify a 6-month period to the operator within which miners shall have the opportunity for examinations.

(b) *Mandatory examinations.* Every operator shall provide to each miner who begins working in or at a coal mine for the first time after December 30, 1969:

(1) An initial chest roentgenogram as soon as possible, but in no event later than 6 months after commencement of employment. A preemployment physical examination which was made within the 6 months prior to the date on which the miner started to work will be considered as fulfilling this requirement. An initial chest roentgenogram given to a miner according to former regulations for this subpart prior to August 1, 1978 will also be considered as fulfilling this requirement.

(2) A second chest roentgenogram, in accordance with this subpart, 3 years following the initial examination if the miner is still engaged in underground coal mining. A second roentgenogram given to a miner according to former regulations under this subpart prior to August 1, 1978 will be considered as fulfilling this requirement.

(3) A third chest roentgenogram 2 years following the second chest roentgenogram if the miner is still engaged in underground coal mining and if the second roentgenogram shows evidence of category 1, category 2, category 3 simple pneumoconioses, or complicated pneumoconioses (ILO Classification).

(c) ALOSH will notify the miner when he or she is due to receive the second or third mandatory examination under (b) of this section. Similarly, ALOSH will notify the coal mine operator when the miner is to be given a second examination. The operator will be notified concerning a miner's third examination only with the miner's written consent, and the notice to the operator shall not state the medical reason for the examination nor that it is the third examination in the series. If the miner is notified by ALOSH that the third mandatory examination is due and the operator is not so notified, availability of the roentgenographic examination under the operator's plan shall constitute the

operator's compliance with the requirement to provide a third mandatory examination even if the miner refuses to take the examination.

(d) The opportunity for chest roentgenograms to be available by an operator for purposes of this subpart shall be provided in accordance with a plan which has been submitted and approved in accordance with this subpart.

(e) Any examinations conducted by the Secretary in the National Study of Coal Workers' Pneumoconiosis after January 1, 1977, but before August 1, 1978 shall satisfy the requirements of this section with respect to the specific examination given (see §37.6(d)).

[43 FR 33715, Aug. 1, 1978; 43 FR 38830, Aug. 31, 1978, as amended at 49 FR 7563, Mar. 1, 1984]

§37.4 Plans for chest roentgenographic examinations.

(a) Every plan for chest roentgenographic examinations of miners shall be submitted on forms prescribed by the Secretary to ALOSH within 120 calendar days after August 1, 1978. In the case of a person who after August 1, 1978, becomes an operator of a mine for which no plan has been approved, that person shall submit a plan within 60 days after such event occurs. A separate plan shall be submitted by the operator and by each construction contractor for each underground coal mine which has a MSHA identification number. The plan shall include:

(1) The name, address, and telephone number of the operator(s) submitting the plan;

(2) The name, MSHA identification number for respirable dust measurements, and address of the mine included in the plan;

(3) The proposed beginning and ending date of the 6-month period for voluntary examinations (see §37.3(a)) and the estimated number of miners to be given or offered examinations during the 6-month period under the plan;

(4) The name and location of the approved X-ray facility or facilities, and the approximate date(s) and time(s) of day during which the roentgenograms will be given to miners to enable a determination of whether the examinations will be conducted at a convenient time and place;

(5) If a mobile facility is proposed, the plan shall provide that each miner be given adequate notice of the opportunity to have the examination and that no miner shall have to wait for an examination more than 1 hour before or after his or her work shift. In addition, the plan shall include:

(i) The number of change houses at the mine.

(ii) One or more alternate nonmobile approved facilities for the reexamination of miners and for the mandatory examination of miners when necessary (see §37.3(b)), or an assurance that the mobile facility will return to the location(s) specified in the plan as frequently as necessary to provide for examinations in accordance with these regulations.

(iii) The name and location of each change house at which examinations will be given. For mines with more than one change house, the examinations shall be given at each change house or at a change house located at a convenient place for each miner.

(6) The name and address of the ''A'' or ''B'' reader who will interpret and classify the chest roentgenograms.

(7) Assurances that: (i) The operator will not solicit a physician's roentgenographic or other findings concerning any miner employed by the operator,

(ii) Instructions have been given to the person(s) giving the examinations that duplicate roentgenograms or copies of roentgenograms will not be made and that (except as may be necessary for the purpose of this subpart) the physician's roentgenographic and other findings, as well as the occupational history information obtained from a miner unless obtained prior to employment in a preemployment examination, and disclosed prior to employment, will not be disclosed in a manner which will permit identification of the employee with the information about him, and

(iii) The roentgenographic examinations will be made at no charge to the miner.

(b) Operators may provide for alternate facilities and ''A'' or ''B'' readers in plans submitted for approval.

(c) The change of operators of any mine operating under a plan approved

pursuant to § 37.5 shall not affect the plan of the operator which has transferred responsibility for the mine. Every plan shall be subject to revision in accordance with paragraph (d) of this section.

(d) The operator shall advise ALOSH of any change in its plan. Each change in an approved plan is subject to the same review and approval as the originally approved plan.

(e) The operator shall promptly display in a visible location on the bulletin board at the mine its proposed plan or proposed change in plan when it is submitted to ALOSH. The proposed plan or change in plan shall remain posted in a visible location on the bulletin board until ALOSH either grants or denies approval of it at which time the approved plan or denial of approval shall be permanently posted. In the case of an operator who is a construction contractor and who does not have a bulletin board, the construction contractor must otherwise notify its employees of the examination arrangements. Upon request, the contractor must show ALOSH written evidence that its employees have been notified.

(f) Upon notification from ALOSH that sufficient time has elapsed since the previous period of examinations, the operator will resubmit its plan for each of its coal mines to ALOSH for approval for the next period of examinations (see § 37.3(a)(2)). The plan shall include the proposed beginning and ending dates of the next period of examinations and all information required by paragraph (a) of this section.

[43 FR 33715, Aug. 1, 1978; 43 FR 38830, Aug. 31, 1978]

§ 37.5 Approval of plans.

(a) Approval of plans granted prior to August 1, 1978 is no longer effective.

(b) If, after review of any plan submitted pursuant to this subpart, the Secretary determines that the action to be taken under the plan by the operator meets the specifications of this subpart and will effectively achieve its purpose, the Secretary will approve the plan and notify the operator(s) submitting the plan of the approval. Approval may be conditioned upon such terms as the Secretary deems necessary to carry out the purpose of section 203 of the act.

(c) Where the Secretary has reason to believe that he will deny approval of a plan he will, prior to the denial, give reasonable notice in writing to the operator(s) of an opportunity to amend the plan. The notice shall specify the ground upon which approval is proposed to be denied.

(d) If a plan is denied approval, the Secretary shall advise the operator(s) in writing of the reasons for the denial.

§ 37.6 Chest roentgenographic examinations conducted by the Secretary.

(a) The Secretary will give chest roentgenograms or make arrangements with an appropriate person, agency, or institution to give the chest roentgenograms and with ''A'' or ''B'' readers to interpret the roentgenograms required under this subpart in the locality where the miner resides, at the mine, or at a medical facility easily accessible to a mining community or mining communities, under the following circumstances:

(1) Where, in the judgment of the Secretary, due to the lack of adequate medical or other necessary facilities or personnel at the mine or in the locality where the miner resides, the required roentgenographic examination cannot be given.

(2) Where the operator has not submitted an approvable plan.

(3) Where, after commencement of an operator's program pursuant to an approved plan and after notice to the operator of his failure to follow the approved plan and, after allowing 15 calendar days to bring the program into compliance, the Secretary determines and notifies the operator in writing that the operator's program still fails to comply with the approved plan.

(b) The operator of the mine shall reimburse the Secretary or other person, agency, or institution as the Secretary may direct, for the cost of conducting each examination made in accordance with this section.

(c) All examinations given or arranged by the Secretary will comply with the time requirements of § 37.3. Whenever the Secretary gives or arranges for the examinations of miners

at a time, a written notice of the arrangements will be sent to the operator who shall post the notice on the mine bulletin board.

(d) Operators of mines selected by ALOSH to participate in the National Study of Coal Workers' Pneumoconiosis (an epidemiological study of respiratory diseases in coal miners) and who agree to cooperate will have all their miners afforded the opportunity to have a chest roentgenogram required hereunder at no cost to the operator. For future examinations and for mandatory examinations each participating operator shall submit an approvable plan.

§ 37.7 Transfer of affected miner to less dusty area.

(a) Any miner who, in the judgment of the Secretary based upon the interpretation of one or more of the miner's chest roentgenograms, shows category 1 (1/0, 1/1, 1/2), category 2 (2/1, 2/2, 2/3), or category 3 (3/2, 3/3, 3/4) simple pneumoconioses, or complicated pneumoconioses (ILO Classification) shall be afforded the option of transferring from his or her position to another position in an area of the mine where the concentration of respirable dust in the mine atmosphere is not more than 1.0 mg/m^3 of air, or if such level is not attainable in the mine, to a position in the mine where the concentration of respirable dust is the lowest attainable below 2.0 mg/m^3 of air.

(b) Any transfer under this section shall be in accordance with the procedures specified in part 90 of title 30, Code of Federal Regulations.

[43 FR 33715, Aug. 1, 1978; 43 FR 38830, Aug. 31, 1978, as amended at 44 FR 23085, Apr. 18, 1979; 49 FR 7563, Mar. 1, 1984]

§ 37.8 Roentgenographic examination at miner's expense.

Any miner who wishes to obtain an examination at his or her own expense at an approved facility and to have submitted to NIOSH for him or her a complete examination may do so, provided that the examination is made no sooner than 6 months after the most recent examination of the miner submitted to ALOSH. ALOSH will provide an interpretation and report of the examinations made at the miner's expense in the same manner as if it were submitted under an operator's plan. Any change in the miner's transfer rights under the act which may result from this examination will be subject to the terms of § 37.7.

§ 37.20 Miner identification document.

As part of the roentgenographic examination, a miner identification document which includes an occupational history questionnaire shall be completed for each miner at the facility where the roentgenogram is made at the same time the chest roentgenogram required by this subpart is given.

SPECIFICATIONS FOR PERFORMING CHEST ROENTGENOGRAPHIC EXAMINATIONS

§ 37.40 General provisions.

(a) The chest roentgenographic examination shall be given at a convenient time and place.

(b) The chest roentgenographic examination consists of the chest roentgenogram, and a complete Roentgenographic Interpretation Form (Form CDC/NIOSH (M) 2.8), and miner identification document.

(c) A roentgenographic examination shall be made in a facility approved in accordance with § 37.42 by or under the supervision of a physician who regularly makes chest roentgenograms and who has demonstrated ability to make chest roentgenograms of a quality to best ascertain the presence of pneumoconiosis.

§ 37.41 Chest roentgenogram specifications.

(a) Every chest roentgenogram shall be a single posteroanterior projection at full inspiration on a film being no less than 14 by 17 inches and no greater than 16 by 17 inches. The film and cassette shall be capable of being positioned both vertically and horizontally so that the chest roentgenogram will include both apices and costophrenic angles. If a miner is too large to permit the above requirements, then the projection shall include both apices with minimum loss of the costophrenic angle.

(b) Miners shall be disrobed from the waist up at the time the roentgenogram is given. The facility shall provide a dressing area and for those miners who wish to use one, the facility shall provide a clean gown. Facilities shall be heated to a comfortable temperature.

(c) Roentgenograms shall be made only with a diagnostic X-ray machine having a rotating anode tube with a maximum of a 2 mm. source (focal spot).

(d) Except as provided in paragraph (e) of this section, roentgenograms shall be made with units having generators which comply with the following: (1) The generators of existing roentgenographic units acquired by the examining facility prior to July 27, 1973, shall have a minimum rating of 200 mA at 100 kVp.; (2) generators of units acquired subsequent to that date shall have a minimum rating of 300 mA at 125 kVp.

NOTE: A generator with a rating of 150 kVp. is recommended.

(e) Roentgenograms made with battery-powered mobile or portable equipment shall be made with units having a minimum rating of 100 mA at 110 kVp. at 500 Hz, or of 200 mA at 110 kVp. at 60 Hz.

(f) Capacitor discharge and field emission units may be used if the model of such units is approved by ALOSH for quality, performance, and safety. ALOSH will consider such units for approval when listed by a facility seeking approval under § 37.42 of this subpart.

(g) Roentgenograms shall be given only with equipment having a beam-limiting device which does not cause large unexposed boundaries. The beam limiting device shall provide rectangular collimation and shall be of the type described in part F of the suggested State regulations for the control of radiation or (for beam limiting devices manufactured after August 1, 1974) of the type specified in 21 CFR 1020.31. The use of such a device shall be discernible from an examination of the roentgenogram.

(h) To insure high quality chest roentgenograms:

(1) The maximum exposure time shall not exceed 1/20 of a second except that with single phase units with a rating less than 300 mA at 125 kVp. and subjects with chests over 28 cm. posteroanterior, the exposure may be increased to not more than 1/10 of a second;

(2) The source or focal spot to film distance shall be at least 6 feet;

(3) Medium speed film and medium speed intensifying screens are recommended. However, any film-screen combination, the rated ''speed'' of which is at least 100 and does not exceed 300, which produces roentgenograms with spatial resolution, contrast, latitude and quantum mottle similar to those of systems designated as ''medium speed'' may be employed;

(4) Film-screen contact shall be maintained and verified at 6 month or shorter intervals;

(5) Intensifying screens shall be inspected at least once a month and cleaned when necessary by the method recommended by the manufacturer;

(6) All intensifying screens in a cassette shall be of the same type and made by the same manufacturer;

(7) When using over 90 kV., a suitable grid or other means of reducing scattered radiation shall be used;

(8) The geometry of the radiographic system shall insure that the central axis (ray) of the primary beam is perpendicular to the plane of the film surface and impinges on the center of the film;

(9) A formal quality assurance program shall be established at each facility.

(i) Radiographic processing:

(1) Either automatic or manual film processing is acceptable. A constant time-temperature technique shall be meticulously employed for manual processing.

(2) If mineral or other impurities in the processing water introduce difficulty in obtaining a high-quality roentgenogram, a suitable filter or purification system shall be used.

(j) Before the miner is advised that the examination is concluded, the roentgenogram shall be processed and inspected and accepted for quality by the physician, or if the physician is not available, acceptance may be made by

the radiologic technologist. In a case of a substandard roentgenogram, another shall be immediately made. All substandard roentgenograms shall be clearly marked as rejected and promptly sent to ALOSH for disposal.

(k) An electric power supply shall be used which complies with the voltage, current, and regulation specified by the manufacturer of the machine.

(l) A densitometric test object may be required on each roentgenogram for an objective evaluation of film quality at the discretion of ALOSH.

(m) Each roentgenogram made hereunder shall be permanently and legibly marked with the name and address or ALOSH approval number of the facility at which it is made, the social security number of the miner, and the date of the roentgenogram. No other identifying markings shall be recorded on the roentgenogram.

[43 FR 33715, Aug. 1, 1978, as amended at 52 FR 7866, Mar. 13, 1987]

§37.42 Approval of roentgenographic facilities.

(a) Approval of roentgenographic facilities given prior to January 1, 1976, shall terminate upon August 1, 1978 unless each of the following conditions have been met:

(1) The facility must verify that it still meets the requirements set forth in the regulations for the second round of roentgenographic examinations (38 FR 20076) and it has not changed equipment since it was approved by NIOSH.

(2) From July 27, 1973, to January 1, 1976, the facility submitted to ALOSH at least 50 roentgenograms which were interpreted by one or more ''B'' readers not employed by the facility who found no more than 5 percent of all the roentgenograms unreadable.

(b) Other facilities will be eligible to participate in this program when they demonstrate their ability to make high quality diagnostic chest roentgenograms by submitting to ALOSH six or more sample chest roentgenograms made and processed at the applicant facility and which are of acceptable quality to the Panel of ''B'' readers. Applicants shall also submit a roentgenogram of a plastic step-wedge object (available on loan from ALOSH) which was made and processed at the same time with the same technique as the roentgenograms submitted and processed at the facility for which approval is sought. At least one chest roentgenogram and one test object roentgenogram shall have been made with each unit to be used hereunder. All roentgenograms shall have been made within 15 calendar days prior to submission and shall be marked to identify the facility where each roentgenogram was made, the X-ray machine used, and the date each was made. The chest roentgenograms will be returned and may be the same roentgenograms submitted pursuant to §37.51.

NOTE: The plastic step-wedge object is described in an article by E. Dale Trout and John P. Kelley appearing in ''The American Journal of Roentgenology, Radium Therapy and Nuclear Medicine,'' Vol. 117, No. 4, April 1973.

(c) Each roentgenographic facility submitting chest roentgenograms for approval under this section shall complete and include an X-ray facility document describing each X-ray unit to be used to make chest roentgenograms under the act. The form shall include: (1) The date of the last radiation safety inspection by an appropriate licensing agency or, if no such agency exists, by a qualified expert as defined in NCRP Report No. 33 (see §37.43); (2) the deficiencies found; (3) a statement that all the deficiencies have been corrected; and (4) the date of acquisition of the X-ray unit. To be acceptable, the radiation safety inspection shall have been made within 1 year preceding the date of application.

(d) Roentgenograms submitted with applications for approval under this section will be evaluated by the panel of ''B'' Readers or by a qualified radiological physicist or consultant. Applicants will be advised of any reasons for denial of approval.

(e) ALOSH or its representatives may make a physical inspection of the applicant's facility and any approved roentgenographic facility at any reasonable time to determine if the requirements of this subpart are being met.

(f) ALOSH may require a facility periodically to resubmit roentgenograms of a plastic step-wedge object, sample roentgenograms, or a

Roentgenographic Facility Document for quality control purposes. Approvals granted hereunder may be suspended or withdrawn by notice in writing when in the opinion of ALOSH the quality of roentgenograms or information submitted under this section warrants such action. A copy of a notice withdrawing approval will be sent to each operator who has listed the facility as its facility for giving chest roentgenograms and shall be displayed on the mine bulletin board adjacent to the operator's approved plan. The approved plan will be reevaluated by ALOSH in light of this change.

[43 FR 33715, Aug. 1, 1978; 43 FR 38830, Aug. 31, 1978]

§ 37.43 Protection against radiation emitted by roentgenographic equipment.

Except as otherwise specified in § 37.41, roentgenographic equipment, its use and the facilities (including mobile facilities) in which such equipment is used, shall conform to applicable State and Federal regulations (See 21 CFR part 1000). Where no applicable regulations exist, roentgenographic equipment, its use and the facilities (including mobile facilities) in which such equipment is used shall conform to the recommendations of the National Council on Radiation Protection and Measurements in NCRP Report No. 33 ''Medical X-ray and Gamma-Ray Protection for Energies up to 10 MeV—Equipment Design and Use'' (issued February 1, 1968), in NCRP Report No. 48, ''Medical Radiation Protection for Medical and Allied Health Personnel'' (issued August 1, 1976), and in NCRP Report No. 49, ''Structural Shielding Design and Evaluation for Medical Use of X-rays and Gamma Rays of up to 10 MeV'' (issued September 15, 1976). These documents are hereby incorporated by reference and made a part of this subpart. These documents are available for examination at ALOSH, 944 Chestnut Ridge Road, Morgantown, WV 26505, and at the National Institute for Occupational Safety and Health, 5600 Fishers Lane, Rockville, MD 20857. Copies of NCRP Reports Nos. 33, 48, and 49 may be purchased for $3, $4.50, and $3.50 each, respectively, from NCRP Publications, P.O. Box 30175, Washington, DC 20014.

SPECIFICATIONS FOR INTERPRETATION, CLASSIFICATION, AND SUBMISSION OF CHEST ROENTGENOGRAMS

§ 37.50 Interpreting and classifying chest roentgenograms.

(a) Chest roentgenograms shall be interpreted and classified in accordance with the ILO Classification system and recorded on a Roentgenographic Interpretation Form (Form CDC/NIOSH (M)2.8).

(b) Roentgenograms shall be interpreted and classified only by a physician who regularly reads chest roentgenograms and who has demonstrated proficiency in classifying the pneumoconioses in accordance with § 37.51.

(c) All interpreters, whenever interpreting chest roentgenograms made under the Act, shall have immediately available for reference a complete set of the ILO International Classification of Radiographs for Pneumoconioses, 1980.

NOTE: This set is available from the International Labor Office, 1750 New York Avenue, NW., Washington, DC 20006 (Phone: 202/376–2315).

(d) In all view boxes used for making interpretations:

(1) Fluorescent lamps shall be simultaneously replaced with new lamps at 6-month intervals;

(2) All the fluorescent lamps in a panel of boxes shall have identical manufacturer's ratings as to intensity and color;

(3) The glass, internal reflective surfaces, and the lamps shall be kept clean;

(4) The unit shall be so situated as to minimize front surface glare.

[43 FR 33715, Aug. 1, 1978, as amended at 49 FR 7564, Mar. 1, 1984]

§ 37.51 Proficiency in the use of systems for classifying the pneumoconioses.

(a) First or ''A'' readers:

(1) Approval as an ''A'' reader shall continue if established prior to (insert) effective date of these regulations).

(2) Physicians who desire to be ''A'' readers must demonstrate their proficiency in classifying the pneumoconioses by either:

(i) Submitting to ALOSH from the physician's files six sample chest roentgenograms which are considered properly classified by the Panel of ''B'' readers. The six roentgenograms shall consist of two without pneumoconiosis, two with simple pneumoconiosis, and two with complicated pneumoconiosis. The films will be returned to the physician. The interpretations shall be on the Roentgenographic Interpretation Form (Form CDC/NIOSH (M) 2.8) (These may be the same roentgenograms submitted pursuant to § 37.42), or;

(ii) Satisfactory completion, since June 11, 1970, of a course approved by ALOSH on the ILO or ILO–U/C Classification systems or the UICC/Cincinnati classification system. As used in this subparagraph, ''UICC/Cincinnati classification'' means the classification of the pneumoconioses devised in 1968 by a Working Committee of the International Union Against Cancer.

(b) Final or ''B'' readers:

(1) Approval as a ''B'' reader established prior to October 1, 1976, shall hereby be terminated.

(2) Proficiency in evaluating chest roentgenograms for roentgenographic quality and in the use of the ILO Classification for interpreting chest roentgenograms for pneumoconiosis and other diseases shall be demonstrated by those physicians who desire to be ''B'' readers by taking and passing a specially designed proficiency examination given on behalf of or by ALOSH at a time and place specified by ALOSH. Each physician must bring a complete set of the ILO standard reference radiographs when taking the examination. Physicians who qualify under this provision need not be qualified under paragraph (a) of this section.

(c) Physicians who wish to participate in the program shall make application on an Interpreting Physician Certification Document (Form CDC/NIOSH (M) 2.12).

[43 FR 33715, Aug. 1, 1978, as amended at 49 FR 7564, Mar. 1, 1984]

§ 37.52 Method of obtaining definitive interpretations.

(a) All chest roentgenograms which are first interpreted by an ''A'' or ''B'' reader will be submitted by ALOSH to a ''B'' reader qualified as described in § 37.51. If there is agreement between the two interpreters as defined in paragraph (b) of this section the result shall be considered final and reported to MSHA for transmittal to the miner. When in the opinion of ALOSH substantial agreement is lacking, ALOSH shall obtain additional interpretations from the Panel of ''B'' readers. If interpretations are obtained from two or more ''B'' readers, and if two or more are in agreement then the highest major category shall be reported.

(b) Two interpreters shall be considered to be in agreement when they both find either stage A, B, or C complicated pneumoconiosis, or their findings with regard to simple pneumoconiosis are both in the same major category, or (with one exception noted below) are within one minor category (ILO Classification 12-point scale) of each other. In the last situation, the higher of the two interpretations shall be reported. The only exception to the one minor category principle is a reading sequence of 0/1, 1/0, or 1/0, 0/1. When such a sequence occurs, it shall not be considered agreement, and a third (or more) interpretation shall be obtained until a consensus involving two or more readings in the same major category is obtained.

[43 FR 33715, Aug. 1, 1978, as amended at 49 FR 7564, Mar. 1, 1984; 52 FR 7866, Mar. 13, 1987]

§ 37.53 Notification of abnormal roentgenographic findings.

(a) Findings of, or findings suggesting, enlarged heart, tuberculosis, lung cancer, or any other significant abnormal findings other than pneumoconiosis shall be communicated by the first physician to interpret and classify the roentgenogram to the designated physician of the miner indicated on the miner's identifcation document. A copy of the communication shall be submitted to ALOSH. ALOSH will notify

the miner to contact his or her physician when any physician who interprets and classifies the miner's roentgenogram reports significant abnormal findings other than pneumoconiosis.

(b) In addition, when ALOSH has more than one roentgenogram of a miner in its files and the most recent examination was interpreted to show enlarged heart, tuberculosis, cancer, complicated pneumoconiosis, and any other significant abnormal findings, ALOSH will submit all of the miner's roentgenograms in its files with their respective interprtations to a ''B'' reader. The ''B'' reader will report any significant changes or progression of disease or other comments to ALOSH and ALOSH shall submit a copy of the report to the miner's designated physician.

(c) All final findings regarding pneumoconiosis will be sent to the miner by MSHA in accordance with section 203 of the act (see 30 CFR part 90). Positive findings with regard to pneumoconiosis will be reported to the miner's designated physician by ALOSH.

(d) ALOSH will make every reasonable effort to process the findings described in paragraph (c) of this section within 60 days of receipt of the information described in § 37.60 in a complete and acceptable form. The information forwarded to MSHA will be in a form intended to facilitate prompt dispatch of the findings to the miner. The results of an examination made of a miner will not be processed by ALOSH if the examination was made within 6 months of the date of a previous acceptable examination.

§ 37.60 Submitting required chest roentgenograms and miner identification documents.

(a) Each chest roentgenogram required to be made under this subpart, together with the completed roentgenographic interpretation form and the completed miner identification document, shall be sumitted together for each miner to ALOSH within 14 calendar days after the roentgenographic examination is given and become the property of ALOSH.

(b) If ALOSH deems any part submitted under paragraph (a) of this section inadequate, it will notify the operator of the deficiency. The operator shall promptly make appropriate arrangements for the necessary reexamination.

(c) Failure to comply with paragraph (a) or (b) of this section shall be cause to revoke approval of a plan or any other approval as may be appropriate. An approval which has been revoked may be reinstated at the discretion of ALOSH after it receives satisfactory assurances and evidence that all deficiencies have been corrected and that effective controls have been instituted to prevent a recurrence.

(d) Chest roentgenograms and other required documents shall be submitted only for miners. Results of preemployment physical examinations of persons who are not hired shall not be submitted.

(e) If a miner refuses to participate in all phases of the examination prescribed in this subpart, no report need be made. If a miner refuses to participate in any phase of the examination prescribed in this subpart, all the forms shall be submitted with his or her name and social security account number on each. If any of the forms cannot be completed because of the miner's refusal, it shall be marked ''Miner Refuses,'' and shall be submitted. No submission shall be made, however, without a completed miner identification document containing the miner's name, address, social security number and place of employment.

REVIEW AND AVAILABILITY OF RECORDS

§ 37.70 Review of interpretations.

(a) Any miner who believes the interpretation for pneumoconiosis reported to him or her by MSHA is in error may file a written request with ALOSH that his or her roentgenogram be reevaluated. If the interpretation was based on agreement between an ''A'' reader and a ''B'' reader, ALOSH will obtain one or more additional interpretations by ''B'' readers as necessary to obtain agreement in accord with § 37.52(b), and MSHA shall report the results to the miner together with any rights which may accrue to the miner in accordance with § 37.7. If the reported interpretation was based on agreement between two (or more) ''B'' readers, the reading

will be accepted as conclusive and the miner shall be so informed by MSHA.

(b) Any operator who is directed by MSHA to transfer a miner to a less dusty atmosphere based on the most recent examination made subsequent to August 1, 1978, may file a written request with ALOSH to review its findings. The standards set forth in paragraph (a) of this section apply and the operator and miner will be notified by MSHA whether the miner is entitled to the option to transfer.

§ 37.80 Availability of records.

(a) Medical information and roentgenograms on miners will be released by ALOSH only with the written consent from the miner, or if the miner is deceased, written consent from the miner's widow, next of kin, or legal representative.

(b) To the extent authorized, roentgenograms will be made available for examination only at ALOSH.

Subpart—Autopsies

AUTHORITY: Sec. 508, 83 Stat. 803; 30 U.S.C. 957.

SOURCE: 36 FR 8870, May 14, 1971, unless otherwise noted.

§ 37.200 Scope.

The provisions of this subpart set forth the conditions under which the Secretary will pay pathologists to obtain results of autopsies performed by them on miners.

§ 37.201 Definitions.

As used in this subpart:

(a) *Secretary* means the Secretary of Health and Human Services.

(b) *Miner* means any individual who during his life was employed in any underground coal mine.

(c) *Pathologist* means

(1) A physician certified in anatomic pathology or pathology by the American Board of Pathology or the American Osteopathic Board of Pathology,

(2) A physician who possesses qualifications which are considered ''Board of eligible'' by the American Board of Pathology or American Osteopathic Board of Pathology, or

(3) An intern, resident, or other physician in a training program in pathology who performs the autopsy under the supervision of a pathologist as defined in paragraph (c) (1) or (2) of this section.

(d) *ALFORD* means the Appalachian Laboratory for Occupational Respiratory Diseases, Public Health Service, Department of Health and Human Services, Post Office Box 4257, Morgantown, WV 26505.

§ 37.202 Payment for autopsy.

(a) The Secretary will pay up to $200 to any pathologist who, after the effective date of the regulations in this part and with legal consent:

(1) Performs an autopsy on a miner in accordance with this subpart; and

(2) Submits the findings and other materials to ALFORD in accordance with this subpart within 180 calendar days after having performed the autopsy; and

(3) Receives no other specific payment, fee, or reimbursement in connection with the autopsy from the miner's widow, his family, his estate, or any other Federal agency.

(b) The Secretary will pay to any pathologist entitled to payment under paragraph (a) of this section and additional $10 if the pathologist can obtain and submits a good quality copy or original of a chest roentgenogram (posteroanterior view) made of the subject of the autopsy within 5 years prior to his death together with a copy of any interpretation made.

[35 FR 13206, Aug. 19, 1970, as amended at 38 FR 16353, June 22, 1973]

§ 37.203 Autopsy specifications.

(a) Every autopsy for which a claim for payment is submitted pursuant to this part:

(1) Shall be performed consistent with standard autopsy procedures such as those, for example, set forth in the ''Autopsy Manual'' prepared by the Armed Forces Institute of Pathology, July 1, 1960. (Technical Manual No. 8–300. NAVMED P–5065, Air Force Manual No. 160–19.) Copies of this document may be borrowed from ALFORD.

(2) Shall include:

(i) Gross and microscopic examination of the lungs, pulmonary pleura, and tracheobronchial lymph nodes;

(ii) Weights of the heart and each lung (these and all other measurements required under this subparagraph shall be in the metric system);

(iii) Circumference of each cardiac valve when opened;

(iv) Thickness of right and left ventricles; these measurements shall be made perpendicular to the ventricular surface and shall not include trabeculations or pericardial fat. The right ventricle shall be measured at a point midway between the tricuspid valve and the apex, and the left ventricle shall be measured directly above the insertion of the anterior papillary muscle;

(v) Size, number, consistency, location, description and other relevant details of all lesions of the lungs;

(vi) Level of the diaphragm;

(vii) From each type of suspected pneumoconiotic lesion, representative microscopic slides stained with hematoxylin eosin or other appropriate stain, and one formalin fixed, paraffin-impregnated block of tissue; a minimum of three stained slides and three blocks of tissue shall be submitted. When no such lesion is recognized, similar material shall be submitted from three separate areas of the lungs selected at random; a minimum of three stained slides and three formalin fixed, paraffin-impregnated blocks of tissue shall be submitted.

(b) Needle biopsy techniques shall not be used.

§ 37.204 Procedure for obtaining payment.

Every claim for payment under this subpart shall be submitted to ALFORD and shall include:

(a) An invoice (in duplicate) on the pathologist's letterhead or billhead indicating the date of autopsy, the amount of the claim and a signed statement that the pathologist is not receiving any other specific compensation for the autopsy from the miner's widow, his surviving next-of-kin, the estate of the miner, or any other source.

(b) Completed PHS Consent, Release and History Form (See Fig. 1). This form may be completed with the assistance of the pathologist, attending physician, family physician, or any other responsible person who can provide reliable information.

(c) Report of autopsy:

(1) The information, slides, and blocks of tissue required by this subpart.

(2) Clinical abstract of terminal illness and other data that the pathologist determines is relevant.

(3) Final summary, including final anatomical diagnoses, indicating presence or absence of simple and complicated pneumoconiosis, and correlation with clinical history if indicated.

FIGURE 1

U.S. DEPARTMENT OF HEALTH AND HUMAN SERVICES

PUBLIC HEALTH SERVICE—NATIONAL COAL WORKERS' AUTOPSY STUDY

Consent, Release, and History Form Federal Coal Mine Health and Safety Act of 1969

I, _____, (Name) _____ (Relationship) of _____, (Name of deceased miner) do hereby authorize the performance of an autopsy (_____) (Limitation, if any, on autopsy) on said deceased. I understand that the report and certain tissues as necessary will be released to the United States Public Health Service and to _____ (Name of Physician securing autopsy)

I understand that any claims in regard to the deceased for which I may sign a general release of medical information will result in the release of the information from the Public Health Service. I further understand that I shall not make any payment for the autopsy.

Occupational and Medical History

1. Date of Birth of Deceased _____. (Month, Day, Year)

2. Social Security Number of Deceased _____ _____ _____.

3. Date and Place of Death _____, (Month, Day, Year) _____ (City, County, State).

4. Place of Last Mining Employment:

Name of Mine □□□□□□□□□□□□□□□□□□□□

Name of Mining Company □□□□□□□□□□

Mine Address □□□□□□□□□□□□□□□□□□□□

5. Last Job Title at Mine of Last Employment

(e.g., Continuous Miner Operator, motorman, foreman, etc.)

6. Job Title of Principal Mining Occupation (that job to which miner devoted the most number of years)

(e.g., Same as above)

7. Smoking History of Miner:

(a) Did he ever smoke cigarettes? Yes No □□□□□□□□□□□□□□□□□□□□□□□□□□

(b) If yes, for how many years?———— Years.

(c) If yes, how many cigarettes per day did he smoke on the average?————

(Number of) Cigarettes per day.

(d) Did he smoke cigarettes up until the time of his death? Yes ——— No ———

(e) If no to (d), for how long before he died had he not been smoking cigarettes?

8. Total Years in Surface and Underground Employment in Coal Mining, by State (If known) ———, (Years) ———— (State).

9. Total Years in *Underground* Coal Mining Employment, by State (If known) ———, (Years) ———— (State).

□□□□□□□□□□□□□□□□□□□□□□□□□□

(Signature)

□□□□□□□□□□□□□□□□□□□□□□□□□□

(Address)

□□□□□□□□□□□□□□□□□□□□□□□□□□

(Date)

Interviewer: □□□□□□□□□□□□□□□□□□□

PART 38—DISASTER ASSISTANCE FOR CRISIS COUNSELING AND TRAINING

Sec.
38.1 Purpose; coordination.
38.2 Definitions.
38.3 Assistance; procedures, limitations.
38.4 Contracts.
38.5 Grant assistance.
38.6 Nondiscrimination.
38.7 Nonliability.
38.8 Criminal and civil penalties.
38.9 Federal audits.

AUTHORITY: Sec. 413, Pub. L. 93–288. The Disaster Relief Act of 1974, 88 Stat. 157, 42 U.S.C. 5183, EO 11795, 39 FR 25939, as amended by EO 11910, 41 FR 15681.

SOURCE: 41 FR 52052, Nov. 26, 1976, unless otherwise noted.

§38.1 Purpose; coordination.

(a) *Purpose.* This part establishes standards and procedures for the implementation of section 413 of Pub. L. 93–288, the Disaster Relief Act of 1974 (42 U.S.C. 5183) which authorizes the provision, either directly or through financial assistance to State or local agencies or private mental health organizations, of:

(1) Professional counseling services to victims of a major disaster in order to relieve mental health problems caused or aggravated by such a major disaster or its aftermath; and

(2) Training of disaster workers to provide or assist in providing those professional counseling services.

(b) *Coordination.* The Secretary, acting through the National Institute of Mental Health, will, as provided in 24 CFR 2205.51, carry out section 413 of the Act and this part in coordination with and under the general policy guidance of, the Administrator of the Federal Disaster Assistance Administration. Contracts and grants awarded under this part are subject to all applicable provisions of the Act and the implementing regulations promulgated by the Administrator (24 CFR part 2205).

§38.2 Definitions.

All terms not defined herein shall have the same meaning as given them in the Act. As used in this part:

(a) *Act* means the Disaster Relief Act of 1974 (42 U.S.C. 5121 , *et seq.*).

(b) *Administrator* means the Administrator, Federal Disaster Assistance Administration (FDAA), Department of Housing and Urban Development, and any other person to whom he delegates the authority.

(c) *Contractor* means any public agency or private mental health organization which, pursuant to this part, contracts with the Secretary to provide professional mental health crisis counseling services or to provide mental health training for disaster workers.

(d) *Crisis* means the existence of any life situation resulting from a major disaster or its aftermath which so effects the emotional and mental equilibrium of a disaster victim that professional mental health counseling services should be provided to help preclude possible damaging physical or psychological effects.

(e) *Disaster workers* means mental health specialists such as psychiatrists, psychologists, psychiatric nurses, social workers, or qualified agents thereof.

(f) *Federal Coordinating Officer* means the person appointed by the Administrator to coordinate Federal assistance in a major disaster.

(g) *Governor* means the chief executive of a State.

(h) *Grantee* means any public agency or private nonprofit mental health organization which, pursuant to this part, is awarded a grant for the purpose of providing professional mental health crisis counseling services or mental health training for disaster workers.

(i) *Major disaster* means any hurricane, tornado, storm, flood, highwater, wind-driven water, tidal wave, tsunami, earthquake, volcanic eruption, landslide, mudslide, snowstorm, drought, fire, explosion, or other catastrophe in any part of the United States which, in the determination of the President, causes damage of sufficient severity and magnitude to warrant major disaster assistance under the Act above and beyond emergency services by the Federal Government, to supplement the efforts and available resources of the States, local governments, and disaster relief organizations, in alleviating the damage, loss, hardship, or suffering caused thereby.

(j) *Regional Director* means a director of a regional office of the Federal Disaster Assistance Administration (FDAA).

(k) *Secretary* means the Secretary of Health and Human Services and any other officer or employee of the Department of Health and Human Services to whom the authority involved has been delegated.

(l) *State* means any of the fifty States, the District of Columbia, Puerto Rico, the Virgin Islands, Guam, American Samoa, the Canal Zone, or the Trust Territory of the Pacific Islands.

(m) *State Coordinating Officer* means the person appointed by the Governor to act in cooperation with the appointed Federal Coordinating Officer.

(n) *Training* means the specific instruction which may be required to enable disaster workers to provide professional mental health crisis counseling to victims of a major disaster or its aftermath.

§ 38.3 Assistance; procedures, limitations.

(a) *Application.* In order to obtain assistance under this part, the Governor or his State Coordinating Officer must, not later than 60 days following a major disaster declaration by the President, file with the appropriate Regional Director a request which includes:

(1) An estimate of the number of disaster victims who may need professional mental health crisis counseling services and of the number of disaster workers who may need training in the provision of such services;

(2) Identification of the geographical areas in which the need exists;

(3) An estimate of the period during which assistance under this part will be required and of the total funds which will be required to provide such assistance;

(4) A description of the types of mental health problems caused or aggravated by the major disaster or its aftermath; and

(5) Identification of the State and local agencies and private mental health organizations capable of providing professional mental health crisis counseling to disaster victims or training of disaster workers.

(b) *Review, approval.* The Secretary, upon notification by the Administrator of a State request for assistance under this part, will conduct a review to determine the extent to which such assistance is needed to supplement assistance programs provided by State and local governments and private organizations and, on the basis of that review, prepare and submit a recommendation and report for consideration by the Administrator. Upon approval by the Administrator and his advancement of funds for carrying out the approved assistance, the Secretary may, within the limits of the funds advanced, provide the approved services either directly or through a grant or contract.

(c) *Eligibility for services.* (1) In order to be eligible for the professional mental health crisis counseling services available under this part an individual must:

(i) Have been located within the designated major disaster area or have been a resident of such area at the time of the major disaster or its aftermath; and

(ii) Have a mental health problem which was caused or aggravated by the major disaster or its aftermath.

(2) Disaster workers who are available on short notice to provide professional mental health crisis counseling services in a major disaster area are eligible for training under this part.

(d) *Time limitation.* Contracts and grants awarded under this part will not continue beyond 180 days after the first day services are provided pursuant to such contracts and grants, except that upon the recommendation of the Secretary (1) the Regional Director may extend the 180 day period for up to 30 days or (2) the Administrator may extend the 180 day period for more than 30 days.

§38.4 Contracts.

(a) *Eligibility.* Public agencies and private mental health organizations which are determined by the Secretary to be capable of providing the professional mental health crisis counseling services or mental health training of disaster workers needed as a result of a major disaster are eligible for the award of a contract under this part.

(b) *Use of local agencies.* Preference will be given to the extent feasible and practicable, to those agencies and organizations which are located or do business primarily in the area affected by the major disaster.

(c) *General requirements.* Contracts under this part shall be entered into and carried out in accordance with the provisions of chapters 1 and 3 of title 41 of the Code of Federal Regulations and all other applicable laws and regulations.

(d) *Payments.* The Secretary shall from time to time make payments to the contractor of all or a portion of the contract award, either by way of reimbursement for expenses incurred or in advance for expenses to be incurred, to the extent he determines such payments are necessary to promote prompt initiation and advancement of the services to be provided under the contract. All payments not expended by the contractor within the period of the contract shall be returned to the Secretary.

(e) *Reports.* Contractors shall submit the following reports to the Secretary:

(1) Progress reports, to be submitted at the end of the first 30 days of the contract period and every 30 days therafter;

(2) A final report to be submitted within 60 days of the date upon which the contract terminates; and

(3) Such additional reports as the Secretary may prescribe including those which may be required to enable the Federal Coordinating Officer to carry out his functions.

§38.5 Grant assistance.

(a) *Eligibility.* Public agencies and private nonprofit mental health organizations which are determined by the Secretary to be capable of providing the professional mental health crisis counseling services or mental health training of disaster workers needed as a result of a major disaster are eligible for a grant award under this part.

(b) *Application.* The application shall contain:

(1) A proposed plan for the provision of the services for which grant assistance is requested;

(2) A proposed budget for the expenditure of the requested grant funds; and

(3) Such other pertinent information and assurances as the Secretary may require.

(c) *Grant awards.* (1) Preference will be given, to the extent feasible and practicable, to those public and private nonprofit agencies and organizations which are located or do business primarily in the area affected by the major disaster.

(2) Within the limits of the funds advanced by the Administrator, the amount of any grant award shall be determined on the basis of the Secretary's estimate of the sum necessary to carry out the grant purpose.

(3) Neither the approval of any application nor the award of any grant commits or obligates the United States in any way to make any additional, supplemental, continuation, or other award with respect to any approved application or portion of an approved application.

(d) *Other HHS regulations that apply.* Several other regulations apply to grants under this grant. These include, but are not limited to:

42 CFR part 50, subpart D—Public Health Service grant appeals procedure
45 CFR part 16—Procedures of the Departmental Grant Appeals Board
45 CFR part 74—Administration of grants
45 CFR part 75—Informal grant appeals procedures
45 CFR part 80—Nondiscrimination under programs receiving Federal assistance through the Department of Health and Human Services effectuation of Title VI of the Civil Rights Act of 1964
45 CFR part 81—Practice and procedure for hearings under part 80 of this title
45 CFR part 84—Nondiscrimination on the basis of handicap in programs and activities receiving or benefiting from Federal financial assistance
45 CFR part 86—Nondiscrimination on the basis of sex in education programs and activities receiving or benefiting from Federal financial assistance
45 CFR part 91—Nondiscrimination on the basis of age in HHS programs or activities receiving Federal financial assistance

(e) *Expenditure of grant funds.* Any funds granted pursuant to this part shall be expended solely for the purposes for which the funds were granted in accordance with the approved application and budget, the regulations of this part, the terms and the conditions of the award, and the applicable cost principles prescribed in subpart Q of 45 CFR part 74.

(f) *Reports.* In exceptional circumstances, a grantee may be required to submit special progress reports, in addition to those otherwise required, relating to the conduct and results of the approved grant.

[41 FR 52052, Nov. 26, 1976, as amended at 45 FR 57396, Aug. 28, 1980; 49 FR 38109, Sept. 27, 1984]

§ 38.6 Nondiscrimination.

Attention is called to the requirements of 24 CFR 2205.13 relating to nondiscrimination on the grounds of race. religion, sex, color, age, economic status, or national origin in the provision of disaster assistance.

§ 38.7 Nonliability.

Attention is called to section 308 of the Act (42 U.S.C. 5148) which provides that the Federal Government shall not be liable for any claim based upon the exercise or performance of or the failure to exercise or perform a discretionary function or duty on the part of a Federal agency or an employee of the Federal Government in carrying out the provisions of the Act.

§ 38.8 Criminal and civil penalties.

Attention is called to section 317 of the Act (42 U.S.C. 5157) which provides:

(a) Any individual who fraudulently or willfully misstates any fact in connection with a request for assistance under this Act shall be fined not more than $10,000 or imprisoned for not more than one year or both for each violation.

(b) Any individual who knowingly violates any order or regulation under this Act shall be subject to a civil penalty of not more than $5,000 for each violation.

(c) Whoever knowingly misapplies the proceeds of a loan or other cash benefit obtained under any section of this Act shall be subject to a fine in an amount equal to one and one half times the original principal amount of the loan or cash benefit.

§ 38.9 Federal audits.

The Secretary, the Administrator, and the Comptroller General of the United States, or their duly authorized representatives shall have access to any books, documents, papers, and records that pertain to Federal funds, equipment, and supplies received under this part for the purpose of audit and examination.

SUBCHAPTER D—GRANTS

PART 50—POLICIES OF GENERAL APPLICABILITY

Subpart A—Responsibility of PHS Awardee and Applicant Institutions for Dealing With and Reporting Possible Misconduct in Science

Sec.
50.101 Applicability.
50.102 Definitions.
50.103 Assurance—Responsibilities of PHS Awardee and Applicant Institutions.
50.104 Reporting to the OSI.
50.105 Institutional compliance.

Subpart B—Sterilization of Persons in Federally Assisted Family Planning Projects

50.201 Applicability.
50.202 Definitions.
50.203 Sterilization of a mentally competent individual aged 21 or older.
50.204 Informed consent requirement.
50.205 Consent form requirements.
50.206 Sterilization of a mentally incompetent individual or of an institutionalized individual.
50.207 Sterilization by hysterectomy.
50.208 Program or project requirements.
50.209 Use of Federal financial assistance.
50.210 Review of regulation.
APPENDIX TO SUBPART B OF PART 50—REQUIRED CONSENT FORM

Subpart C—Abortions and Related Medical Services in Federally Assisted Programs of the Public Health Service

50.301 Applicability.
50.302 Definitions.
50.303 General rule.
50.304 Life of the mother would be endangered.
50.305 [Reserved]
50.306 Rape and incest.
50.307 Documentation needed by programs or projects.
50.308 Drugs and devices and termination of ectopic pregnancies.
50.309 Recordkeeping requirements.
50.310 Confidentiality.

Subpart D—Public Health Service Grant Appeals Procedure

50.401 What is the purpose of this subpart?
50.402 To what programs do these regulations apply?
50.403 What is the policy basis for these procedures?
50.404 What disputes are covered by these procedures?
50.405 What is the structure of review committees?
50.406 What are the steps in the process?

Subpart E—Maximum Allowable Cost for Drugs

50.501 Applicability.
50.502 Definitions.
50.503 Policy.
50.504 Allowable cost of drugs.

Subpart F—Responsibility of Applicants for Promoting Objectivity in Research for Which PHS Funding Is Sought

50.601 Purpose.
50.602 Applicability.
50.603 Definitions.
50.604 Institutional responsibility regarding conflicting interests of investigators
50.605 Management of conflicting interests.
50.606 Remedies.
50.607 Other HHS regulations that apply.

AUTHORITY: Sec. 215, Public Health Service Act, 58 Stat. 690 (42 U.S.C. 216); Sec. 1006, Public Health Service Act, 84 Stat. 1507 (42 U.S.C. 300a–4), unless otherwise noted.

SOURCE: 43 FR 52165, Nov. 8, 1978, unless otherwise noted.

Subpart A—Responsibility of PHS Awardee and Applicant Institutions for Dealing With and Reporting Possible Misconduct in Science

AUTHORITY: Sec. 493, Public Health Service Act, as amended, 99 Stat. 874–875 (42 U.S.C. 289b); Sec. 501(f), Public Health Service Act, as amended, 102 Stat. 4213 (42 U.S.C. 290aa(f)).

SOURCE: 54 FR 32449, Aug. 8, 1989, unless otherwise noted.

§ 50.101 Applicability.

This subpart applies to each entity which applies for a research, research-training, or research-related grant or cooperative agreement under the Public Health Service (PHS) Act. It requires each such entity to establish uniform policies and procedures for investigating and reporting instances of

alleged or apparent misconduct involving research or research training, applications for support of research or research training, or related research activities that are supported with funds made available under the PHS Act. This subpart does not supersede and is not intended to set up an alternative to established procedures for resolving fiscal improprieties, issues concerning the ethical treatment of human or animal subjects, or criminal matters.

§ 50.102 Definitions.

As used in this subpart:

Act means the Public Health Service Act, as amended, (42 U.S.C. 201 *et seq.*).

Inquiry means information gathering and initial factfinding to determine whether an allegation or apparent instance of misconduct warrants an investigation.

Institution means the public or private entity or organization (including federal, state, and other agencies) that is applying for financial assistance from the PHS, e.g., grant or cooperative agreements, including continuation awards, whether competing or noncompeting. The organization assumes legal and financial accountability for the awarded funds and for the performance of the supported activities.

Investigation means the formal examination and evaluation of all relevant facts to determine if misconduct has occurred.

Misconduct or *Misconduct in Science* means fabrication, falsification, plagiarism, or other practices that seriously deviate from those that are commonly accepted within the scientific community for proposing, conducting, or reporting research. It does not include honest error or honest differences in interpretations or judgments of data.

OSI means the Office of Scientific Integrity, a component of the Office of the Director of the National Institutes for Health (NIH), which oversees the implementation of all PHS policies and procedures related to scientific misconduct; monitors the individual investigations into alleged or suspected scientific misconduct conducted by institutions that receive PHS funds for biomedical or behavioral research projects or programs; and conducts investigations as necessary.

OSIR means the Office of Scientific Integrity Review, a component of the Office of the Assistant Secretary for Health, which is responsible for establishing overall PHS policies and procedures for dealing with misconduct in science, overseeing the activities of PHS research agencies to ensure that these policies and procedures are implemented, and reviewing all final reports of investigations to assure that any findings and recommendations are sufficiently documented. The OSIR also makes final recommendations to the Assistant Secretary for Health on whether any sanctions should be imposed and, if so, what they should be in any case where scientific misconduct has been established.

PHS means the Public Health Service, an operating division of the Department of Health and Human Services (HHS). References to PHS include organizational units within the PHS that have delegated authority to award financial assistance to support scientific activities, e.g., Bureaus, Institutes, Divisions, Centers or Offices.

Secretary means the Secretary of Health and Human Services and any other officer or employee of the Department of Health and Human Services to whom the authority involved may be delegated.

§ 50.103 Assurance—Responsibilities of PHS awardee and applicant institutions.

(a) *Assurances.* Each institution that applies for or receives assistance under the Act for any project or program which involves the conduct of biomedical or behavioral research must have an assurance satisfactory to the Secretary that the applicant:

(1) Has established an administrative process, that meets the requirements of this Subpart, for reviewing, investigating, and reporting allegations of misconduct in science in connection with PHS-sponsored biomedical and behavioral research conducted at the applicant institution or sponsored by the applicant; and

(2) Will comply with its own administrative process and the requirements of this Subpart.

(b) *Annual Submission.* An applicant or recipient institution shall make an annual submission to the OSI as follows:

(1) The institution's assurance shall be submitted to the OSI, on a form prescribed by the Secretary, as soon as possible after November 8, 1989, but no later than January 1, 1990, and updated annually therefter on a date specified by OSI. Copies of the form may be requested through the Director, OSI.

(2) An institution shall submit, along with its annual assurance, such aggregate information on allegations, inquiries, and investigations as the Secretary may prescribe.

(c) *General Criteria.* In general, an applicant institution will be considered to be in compliance with its assurance if it:

(1) Establishes, keeps current, and upon request provides the OSIR, the OSI, and other authorized Departmental officials the policies and procedures required by this subpart.

(2) Informs its scientific and administrative staff of the policies and procedures and the importance of compliance with those policies and procedures.

(3) Takes immediate and appropriate action as soon as misconduct on the part of employees or persons within the organization's control is suspected or alleged.

(4) Informs, in accordance with this subpart, and cooperates with the OSI with regard to each investigation of possible misconduct.

(d) *Inquiries, Investigations, and Reporting—Specific Requirements.* Each applicant's policies and procedures must provide for:

(1) Inquiring immediately into an allegation or other evidence of possible misconduct. An inquiry must be completed within 60 calendar days of its initiation unless circumstances clearly warrant a longer period. A written report shall be prepared that states what evidence was reviewed, summarizes relevant interviews, and includes the conclusions of the inquiry. The individual(s) against whom the allegation was made shall be given a copy of the report of inquiry. If they comment on that report, their comments may be made part of the record. If the inquiry takes longer than 60 days to complete, the record of the inquiry shall include documentation of the reasons for exceeding the 60-day period.

(2) Protecting, to the maximum extent possible, the privacy of those who in good faith report apparent misconduct.

(3) Affording the affected individual(s) confidential treatment to the maximum extent possible, a prompt and thorough investigation, and an opportunity to comment on allegations and findings of the inquiry and/or the investigation.

(4) Notifying the Director, OSI, in accordance with § 50.104(a) when, on the basis of the initial inquiry, the institution determines that an investigation is warranted, or prior to the decision to initiate an investigation if the conditions listed in § 50.104(b) exist.

(5) Notifying the OSI within 24 hours of obtaining any reasonable indication of possible criminal violations, so that the OSI may then immediately notify the Department's Office of Inspector General.

(6) Maintaining sufficiently detailed documentation of inquiries to permit a later assessment of the reasons for determining that an investigation was not warranted, if necessary. Such records shall be maintained in a secure manner for a period of at least three years after the termination of the inquiry, and shall, upon request, be provided to authorized HHS personnel.

(7) Undertaking an investigation within 30 days of the completion of the inquiry, if findings from that inquiry provide sufficient basis for conducting an investigation. The investigation normally will include examination of all documentation, including but not necessarily limited to relevant research data and proposals, publications, correspondence, and memoranda of telephone calls. Whenever possible, interviews should be conducted of all individuals involved either in making the allegation or against whom the allegation is made, as well as other individuals who might have information regarding key aspects of the allegations; complete summaries of these interviews should be prepared, provided to the interviewed party for comment

or revision, and included as part of the investigatory file.

(8) Securing necessary and appropriate expertise to carry out a thorough and authoritative evaluation of the relevant evidence in any inquiry or investigation.

(9) Taking precautions against real or apparent conflicts of interest on the part of those involved in the inquiry or investigation.

(10) Preparing and maintaining the documentation to substantiate the investigation's findings. This documentation is to be made available to the Director, OSI, who will decide whether that Office will either proceed with its own investigation or will act on the institution's findings.

(11) Taking interim administrative actions, as appropriate, to protect Federal funds and insure that the purposes of the Federal financial assistance are carried out.

(12) Keeping the OSI apprised of any developments during the course of the investigation which disclose facts that may affect current or potential Department of Health and Human Services funding for the individual(s) under investigation or that the PHS needs to know to ensure appropriate use of Federal funds and otherwise protect the public interest.

(13) Undertaking diligent efforts, as appropriate, to restore the reputations of persons alleged to have engaged in misconduct when allegations are not confirmed, and also undertaking diligent efforts to protect the positions and reputations of those persons who, in good faith, make allegations.

(14) Imposing appropriate sanctions on individuals when the allegation of misconduct has been substantiated.

(15) Notifying the OSI of the final outcome of the investigation.

§ 50.104 Reporting to the OSI.

(a)(1) An institution's decision to initiate an investigation must be reported in writing to the Director, OSI, on or before the date the investigation begins. At a minimum, the notification should include the name of the person(s) against whom the allegations have been made, the general nature of the allegation, and the PHS application or grant number(s) involved. Information provided through the notification will be held in confidence to the extent permitted by law, will not be disclosed as part of the peer review and Advisory Committee review processes, but may be used by the Secretary in making decisions about the award or continuation of funding.

(2) An investigation should ordinarily be completed within 120 days of its initiation. This includes conducting the investigation, preparing the report of findings, making that report available for comment by the subjects of the investigation, and submitting the report to the OSI. If they can be identified, the person(s) who raised the allegation should be provided with those portions of the report that address their role and opinions in the investigation.

(3) Institutions are expected to carry their investigations through to completion, and to pursue diligently all significant issues. If an institution plans to terminate an inquiry or investigation for any reason without completing all relevant requirements under § 50.103(d), a report of such planned termination, including a description of the reasons for such termination, shall be made to OSI, which will then decide whether further investigation should be undertaken.

(4) The final report submitted to the OSI must describe the policies and procedures under which the investigation was conducted, how and from whom information was obtained relevant to the investigation, the findings, and the basis for the findings, and include the actual text or an accurate summary of the views of any individual(s) found to have engaged in misconduct, as well as a description of any sanctions taken by the institution.

(5) If the institution determines that it will not be able to complete the investigation in 120 days, it must submit to the OSI a written request for an extension and an explanation for the delay that includes an interim report on the progress to date and an estimate for the date of completion of the report and other necessary steps. Any consideration for an extension must balance the need for a thorough and rigorous

examination of the facts versus the interests of the subject(s) of the investigation and the PHS in a timely resolution of the matter. If the request is granted, the institution must file periodic progress reports as requested by the OSI. If satisfactory progress is not made in the institution's investigation, the OSI may undertake an investigation of its own.

(6) Upon receipt of the final report of investigation and supporting materials, the OSI will review the information in order to determine whether the investigation has been performed in a timely manner and with sufficient objectivity, thoroughness and competence. The OSI may then request clarification or additional information and, if necessary, perform its own investigation. While primary responsibility for the conduct of investigations and inquiries lies with the institution, the Department reserves the right to perform its own investigation at any time prior to, during, or following an institution's investigation.

(7) In addition to sanctions that the institution may decide to impose, the Department also may impose sanctions of its own upon investigators or institutions based upon authorities it possesses or may possess, if such action seems appropriate.

(b) The institution is responsible for notifying the OSI if it ascertains at any stage of the inquiry or investigation, that any of the following conditions exist:

(1) There is an immediate health hazard involved;

(2) There is an immediate need to protect Federal funds or equipment;

(3) There is an immediate need to protect the interests of the person(s) making the allegations or of the individual(s) who is the subject of the allegations as well as his/her co-investigators and associates, if any;

(4) It is probable that the alleged incident is going to be reported publicly.

(5) There is a reasonable indication of possible criminal violation. In that instance, the institution must inform OSI within 24 hours of obtaining that information. OSI will immediately notify the Office of the Inspector General.

§ 50.105 Institutional compliance.

Institutions shall foster a research environment that discourages misconduct in all research and that deals forthrightly with possible misconduct associated with research for which PHS funds have been provided or requested. An institution's failure to comply with its assurance and the requirements of this subpart may result in enforcement action against the institution, including loss of funding, and may lead to the OSI's conducting its own investigation.

Subpart B—Sterilization of Persons in Federally Assisted Family Planning Projects

§ 50.201 Applicability.

The provisions of this subpart are applicable to programs or projects for health services which are supported in whole or in part by Federal financial assistance, whether by grant or contract, administered by the Public Health Service.

§ 50.202 Definitions.

As used in this subpart:

Arrange for means to make arrangements (other than mere referral of an individual to, or the mere making of an appointment for him or her with, another health care provider) for the performance of a medical procedure on an individual by a health care provider other than the program or project.

Hysterectomy means a medical procedure or operation for the purpose of removing the uterus.

Institutionalized individual means an individual who is (1) involuntarily confined or detained, under a civil or criminal statute, in a correctional or rehabilitative facility, including a mental hospital or other facility for the care and treatment of mental illness, or (2) confined, under a voluntary commitment, in a mental hospital or other facility for the care and treatment of mental illness.

Mentally incompetent individual means an individual who has been declared mentally incompetent by a Federal, State, or local court of competent jurisdiction for any purpose unless he or she has been declared competent for

purposes which include the ability to consent to sterilization.

Public Health Service means the Office of the Assistant Secretary for Health, Health Resources and Services Administration, National Institutes of Health, Centers for Disease Control, Alcohol, Drug Abuse and Mental Health Administration and all of their constituent agencies.

The *Secretary* means the Secretary of Health and Human Services and any other officer or employee of the Department of Health and Human Services to whom the authority involved has been delegated.

Sterilization means any medical procedure, treatment, or operation for the purpose of rendering an individual permanently incapable of reproducing.

[43 FR 52165, Nov. 8, 1978, as amended at 49 FR 38109, Sept. 27, 1984]

§ 50.203 Sterilization of a mentally competent individual aged 21 or older.

Programs or projects to which this subpart applies shall perform or arrange for the performance of sterilization of an individual only if the following requirements have been met:

(a) The individual is at least 21 years old at the time consent is obtained.

(b) The individual is not a mentally incompetent individual.

(c) The individual has voluntarily given his or her informed consent in accordance with the procedures of § 50.204 of this subpart.

(d) At least 30 days but not more than 180 days have passed between the date of informed consent and the date of the sterilization, except in the case of premature delivery or emergency abdominal surgery. An individual may consent to be sterilized at the time of premature delivery or emergency abdominal surgery, if at least 72 hours have passed after he or she gave informed consent to sterilization. In the case of premature delivery, the informed consent must have been given at least 30 days before the expected date of delivery.

§ 50.204 Informed consent requirement.

Informed consent does not exist unless a consent form is completed voluntarily and in accordance with all the requirements of this section and § 50.205 of this subpart.

(a) A person who obtains informed consent for a sterilization procedure must offer to answer any questions the individual to be sterilized may have concerning the procedure, provide a copy of the consent form, and provide orally all of the following information or advice to the individual who is to be sterilized:

(1) Advice that the individual is free to withhold or withdraw consent to the procedure any time before the sterilization without affecting his or her right to future care or treatment and without loss or withdrawal of any federally funded program benefits to which the individual might be otherwise entitled:

(2) A description of available alternative methods of family planning and birth control;

(3) Advice that the sterilization procedure is considered to be irreversible;

(4) A thorough explanation of the specific sterilization procedure to be performed;

(5) A full description of the discomforts and risks that may accompany or follow the performing of the procedure, including an explanation of the type and possible effects of any anesthetic to be used;

(6) A full description of the benefits or advantages that may be expected as a result of the sterilization; and

(7) Advice that the sterilization will not be performed for at least 30 days except under the circumstances specified in § 50.203(d) of this subpart.

(b) An interpreter must be provided to assist the individual to be sterilized if he or she does not understand the language used on the consent form or the language used by the person obtaining the consent.

(c) Suitable arrangements must be made to insure that the information specified in paragraph (a) of this section is effectively communicated to any individual to be sterilized who is blind, deaf or otherwise handicapped.

(d) A witness chosen by the individual to be sterilized may be present when consent is obtained.

(e) Informed consent may not be obtained while the individual to be sterilized is:

(1) In labor or childbirth;

(2) Seeking to obtain or obtaining an abortion; or

(3) Under the influence of alcohol or other substances that affect the individual's state of awareness.

(f) Any requirement of State and local law for obtaining consent, except one of spousal consent, must be followed.

§ 50.205 Consent form requirements.

(a) *Required consent form.* The consent form appended to this subpart or another consent form approved by the Secretary must be used.

(b) *Required signatures.* The consent form must be signed and dated by:

(1) The individual to be sterilized; and

(2) The interpreter, if one is provided; and

(3) The person who obtains the consent; and

(4) The physician who will perform the sterilization procedure.

(c) *Required certifications.* (1) The person obtaining the consent must certify by signing the consent form that:

(i) Before the individual to be sterilized signed the consent form, he or she advised the individual to be sterilized that no Federal benefits may be withdrawn because of the decision not to be sterilized,

(ii) He or she explained orally the requirements for informed consent as set forth on the consent form, and

(iii) To the best of his or her knowledge and belief, the individual to be sterilized appeared mentally competent and knowingly and voluntarily consented to be sterilized.

(2) The physician performing the sterilization must certify by signing the consent form, that:

(i) Shortly before the performance of the sterilization, he or she advised the individual to be sterilized that no Federal benefits may be withdrawn because of the decision not to be sterilized,

(ii) He or she explained orally the requirements for informed consent as set forth on the consent form, and

(iii) To the best of his or her knowledge and belief, the individual to be sterilized appeared mentally competent and knowingly and voluntarily consented to be sterilized. Except in the case of premature delivery or emergency abdominal surgery, the physician must further certify that at least 30 days have passed between the date of the individual's signature on the consent form and the date upon which the sterilization was performed. If premature delivery occurs or emergency abdominal surgery is required within the 30–day period, the physician must certify that the sterilization was performed less than 30 days but not less than 72 hours after the date of the individual's signature on the consent form because of premature delivery or emergency abdominal surgery, as applicable. In the case of premature delivery, the physician must also state the expected date of delivery. In the case of emergency abdominal surgery, the physician must describe the emergency.

(3) If an interpreter is provided, the interpreter must certify that he or she translated the information and advice presented orally, read the consent form and explained its contents and to the best of the interpreter's knowledge and belief, the individual to be sterilized understood what the interpreter told him or her.

§ 50.206 Sterilization of a mentally incompetent individual or of an institutionalized individual.

Programs or projects to which this subpart applies shall not perform or arrange for the performance of a sterilization of any mentally incompetent individual or institutionalized individual.

§ 50.207 Sterilization by hysterectomy.

(a) Programs or projects to which this subpart applies shall not perform or arrange for the performance of any hysterectomy solely for the purpose of rendering an individual permanently incapable of reproducing or where, if there is more than one purpose to the procedure, the hysterectomy would not be performed but for the purpose of rendering the individual permanently incapable of reproducing.

(b) Except as provided in paragraph (c) of this section, programs or projects to which this subpart applies may perform or arrange for the performance of a hysterectomy not covered by paragraph (a) of this section only if:

(1) The person who secures the authorization to perform the hysterectomy has informed the individual and her representative, if any, orally and in writing, that the hysterectomy will make her permanently incapable of reproducing; and

(2) The individual or her representative, if any, has signed a written acknowledgment of receipt of that information.

(c)(1) A program or project is not required to follow the procedures of paragraph (b) of this section if either of the following circumstances exists:

(i) The individual is already sterile at the time of the hysterectomy.

(ii) The individual requires a hysterectomy because of a life-threatening emergency in which the physician determines that prior acknowledgment is not possible.

(2) If the procedures of paragraph (b) of this section are not followed because one or more of the circumstances of paragraph (c)(1) exist, the physician who performs the hysterectomy must certify in writing:

(i) That the woman was already sterile, stating the cause of that sterility; or

(ii) That the hysterectomy was performed under a life-threatening emergency situation in which he or she determined prior acknowledgment was not possible. He or she must also include a description of the nature of the emergency.

[43 FR 52165, Nov. 8, 1978, as amended at 47 FR 33701, Aug. 4, 1982]

§ 50.208 Program or project requirements.

(a) A program or project must, with respect to any sterilization procedure or hysterectomy it performs or arranges, meet all requirements of this subpart.

(b) The program or project shall maintain sufficient records and documentation to assure compliance with these regulations, and must retain such data for at least 3 years.

(c) The program or project shall submit other reports as required and when requested by the Secretary.

§ 50.209 Use of Federal financial assistance.

(a) Federal financial assistance adminstered by the Public Health Service may not be used for expenditures for sterilization procedures unless the consent form appended to this section or another form approved by the Secretary is used.

(b) A program or project shall not use Federal financial assistance for any sterilization or hysterectomy without first receiving documentation showing that the requirements of this subpart have been met. Documentation includes consent forms, and as applicable, either acknowledgments of receipt of hysterectomy information or certification of an exception for hysterectomies.

[43 FR 52165, Nov. 8, 1978, as amended at 47 FR 33701, Aug. 4, 1982]

§ 50.210 Review of regulation.

The Secretary will request public comment on the operation of the provisions of this subpart not later than 3 years after their effective date.

APPENDIX TO SUBPART B OF PART 50—REQUIRED CONSENT FORM

NOTICE: YOUR DECISION AT ANY TIME NOT TO BE STERILIZED WILL NOT RESULT IN THE WITHDRAWAL OR WITHHOLDING OF ANY BENEFITS PROVIDED BY PROGRAMS OR PROJECTS RECEIVING FEDERAL FUNDS.

CONSENT TO STERILIZATION

I have asked for and received information about sterilization from ———————— (doctor or clinic). When I first asked for the information, I was told that the decision to be sterilized is completely up to me. I was told that I could decide not to be sterilized. If I decide not to be sterilized, my decision will not affect my right to future care or treatment. I will not lose any help or benefits from programs receiving Federal funds, such as A.F.D.C. or medicaid that I am now getting or for which I may become eligible.

I UNDERSTAND THAT THE STERILIZATION MUST BE CONSIDERED PERMANENT AND NOT REVERSIBLE. I HAVE DECIDED THAT I DO NOT WANT TO BECOME PREGNANT, BEAR CHILDREN OR FATHER CHILDREN.

I was told about those temporary methods of birth control that are available and could be provided to me which will allow me to bear or father a child in the future. I have rejected these alternatives and chosen to be sterilized.

I understand that I will be sterilized by an operation known as a ————. The discomforts, risks and benefits associated with the operation have been explained to me. All my questions have been answered to my satisfaction.

I understand that the operation will not be done until at least 30 days after I sign this form. I understand that I can change my mind at any time and that my decision at any time not to be sterilized will not result in the withholding of any benefits or medical services provided by federally funded programs.

I am at least 21 years of age and was born on — (day), ———— (month), —— (year).

I, ————, hereby consent of my own free will to be sterilized by ———— by a method called ————. My consent expires 180 days from the date of my signature below.

I also consent to the release of this form and other medical records about the operation to:

Representatives of the Department of Health and Human Services or

Employees of programs or projects funded by that Department but only for determining if Federal laws were observed.

I have received a copy of this form.

Signature □□□□□□□□□□□□□□□□□□□□
Date: □□□□□□□□□□□□□□□□□□□□□□□□
(Month, day, year)

You are requested to supply the following information, but it is not required:

Race and ethnicity designation (please check)

Black (not of Hispanic origin) □□□□□□□
Hispanic □□□□□□□□□□□□□□□□□□□□□
Asian or Pacific Islander □□□□□□□□□□□
American Indian or Alaskan native □□□□
White (not of Hispanic origin) □□□□□□□

INTERPRETER'S STATEMENT

If an interpreter is provided to assist the individual to be sterilized:

I have translated the information and advice presented orally to the individual to be sterilized by the person obtaining this consent. I have also read him/her the consent form in ———— language and explained its contents to him/her. To the best of my knowledge and belief he/she understood this explanation.

Interpreter □□□□□□□□□□□□□□□□□□□□
Date □□□□□□□□□□□□□□□□□□□□□□□□

STATE OF PERSON OBTAINING CONSENT

Before ———— (name of individual), signed the consent form, I explained to him/her the nature of the sterilization operation ————, the fact that it is intended to be a final and irreversible procedure and the discomforts, risks and benefits associated with it.

I counseled the individual to be sterilized that alternative methods of birth control are available which are temporary. I explained that sterilization is different because it is permanent.

I informed the individual to be sterilized that his/her consent can be withdrawn at any time and that he/she will not lose any health services or any benefits provided by Federal funds.

To the best of my knowledge and belief the individual to be sterilized is at least 21 years old and appears mentally competent. He/She knowingly and voluntarily requested to be sterilized and appears to understand the nature and consequence of the procedure.

Signature of person obtaining consent □□□
Date □□□□□□□□□□□□□□□□□□□□□□□□
Facility □□□□□□□□□□□□□□□□□□□□□□
Address □□□□□□□□□□□□□□□□□□□□□□

PHYSICIAN'S STATEMENT

Shortly before I performed a sterilization operation upon ———— (name of individual to be sterilized), on ———— (date of sterilization), ———— (operation), I explained to him/her the nature of the sterilization operation ———— (specify type of operation), the fact that it is intended to be a final and irreversible procedure and the discomforts, risks and benefits associated with it.

I counseled the individual to be sterilized that alternative methods of birth control are available which are temporary. I explained that sterilization is different because it is permanent.

I informed the individual to be sterilized that his/her consent can be withdrawn at any time and that he/she will not lose any health services or benefits provided by Federal funds.

To the best of my knowledge and belief the individual to be sterilized is at least 21 years old and appears mentally competent. He/She knowingly and voluntarily requested to be sterilized and appeared to understand the nature and consequences of the procedure.

(*Instructions for use of alternative final paragraphs:* Use the first paragraph below except in the case of premature delivery or emergency abdominal surgery where the sterilization is performed less than 30 days after the date of the individual's signature on the consent form. In those cases, the second paragraph below must be used. Cross out the paragraph which is not used.)

(1) At least 30 days have passed between the date of the individual's signature on this consent form and the date the sterilization was performed.

(2) This sterilization was performed less than 30 days but more than 72 hours after the date of the individual's signature on this consent form because of the following circumstances (check applicable box and fill in information requested):

☐ Premature delivery
Individual's expected date of delivery: ☐☐☐
☐ Emergency abdominal surgery:
(Describe circumstances): ☐☐☐☐☐☐☐☐☐☐
Physician ☐☐☐☐☐☐☐☐☐☐☐☐☐☐☐☐☐☐☐☐
Date ☐☐☐☐☐☐☐☐☐☐☐☐☐☐☐☐☐☐☐☐☐☐

[43 FR 52165, Nov. 8, 1978, as amended at 58 FR 33343, June 17, 1993]

Subpart C—Abortions and Related Medical Services in Federally Assisted Programs of the Public Health Service

AUTHORITY: Sec. 118, Pub. L. 96–86, Oct. 12, 1979, unless otherwise noted.

SOURCE: 43 FR 4570, Feb. 2, 1978, unless otherwise noted.

§ 50.301 Applicability.

The provisions of this subpart are applicable to programs or projects for health services which are supported in whole or in part by Federal financial assistance, whether by grant or contract, appropriated to the Department of Health and Human Services and administered by the Public Health Service.

§ 50.302 Definitions.

As used in this subpart: (a) *Law enforcement agency* means an agency, or any part thereof, charged under applicable law with enforcement of the general penal statutes of the United States, or of any State or local jurisdiction.

(b) *Medical procedures performed upon a victim of rape or incest* means any medical service, including an abortion, performed for the purpose of preventing or terminating a pregnancy arising out of an incident of rape or incest.

(c) *Physician* means a doctor of medicine or osteopathy legally authorized to practice medicine and surgery by the State in which he or she practices.

(d) *Public health service* means: (1) An agency of the United States or of a State or local government, that provides health or medical services; and

(2) A *rural health clinic*, as defined under section 1(d)(aa)(2) of Pub. L. 95–210, 91 Stat. 1485; except that any agency or facility whose principal function is the performance of abortions is specifically excluded from this definition.

§ 50.303 General rule.

Federal financial participation is not available for the performance of an abortion in programs or projects to which this subpart applies except under circumstances described in § 50.304 or § 50.306.

[43 FR 4570, Feb. 2, 1978, as amended at 44 FR 61598, Oct. 26, 1979]

§ 50.304 Life of the mother would be endangered.

Federal financial participation is available in expenditures for an abortion when a physician has found, and so certified in writing to the program or project, that on the basis of his/her professional judgment, the life of the mother would be endangered if the fetus were carried to term. The certification must contain the name and address of the patient.

(Sec. 101, Pub. L. 95–205, 91 Stat. 1461, Dec. 9, 1977)

[43 FR 13868, July 21, 1978]

§ 50.305 [Reserved]

§ 50.306 Rape and incest.

Federal financial participation is available in expenditures for medical procedures performed upon a victim of rape or incest if the program or project has received signed documentation from a law enforcement agency or public health service stating:

(a) That the person upon whom the medical procedure was performed was reported to have been the victim of an incident of rape or incest;

(b) The date on which the incident occurred;

(c) The date on which the report was made, which must have been within 60 days of the date on which the incident occurred;

(d) The name and address of the victim and the name and address of the person making the report (if different from the victim); and

(e) That the report included the signature of the person who reported the incident.

Federal financial participation is also available in expenditures for abortions for victims of rape or incest under the circumstances described in § 50.304 without regard to the requirements of the preceding sentence.

(Sec. 101, Pub. L. 95–205, 91 Stat. 1461, Dec. 9, 1977)

[43 FR 13868, July 21, 1978, as amended at 44 FR 61598, Oct. 26, 1979]

§ 50.307 Documentation needed by programs or projects.

Federal financial participation is unavailable for the performance of abortions or other medical procedures otherwise provided for under §§ 50.304 and 50.306 if the program or project has paid without first having received the certifications and documentation specified in those sections.

[43 FR 4570, Feb. 2, 1978, as amended at 44 FR 61598, Oct. 26, 1979]

§ 50.308 Drugs and devices and termination of ectopic pregnancies.

Federal financial participation is available with respect to the cost of drugs or devices to prevent implantation of the fertilized ovum, and for medical procedures necessary for the termination of an ectopic pregnancy.

§ 50.309 Recordkeeping requirements.

Programs or projects to which this subpart applies must maintain copies of the certifications and documentation specified in §§ 50.304 and 50.306 for three years pursuant to the retention and custodial requirements for records at 45 CFR 74.20 *et seq.*

[43 FR 4570, Feb. 2, 1978, as amended at 44 FR 61598, Oct. 26, 1979]

§ 50.310 Confidentiality.

Information in the records or in the possession of programs or projects which is acquired in connection with the requirements of this subpart may not be disclosed in a form which permits the identification of an individual without the individual's consent except as may be necessary for the health of the individual or as may be necessary for the Secretary to monitor the activities of those programs or projects. In any event, any disclosure shall be subject to appropriate safeguards which will minimize the likelihood of disclosures of personal information in identifiable form.

Subpart D—Public Health Service Grant Appeals Procedure

AUTHORITY: Sec. 215, Public Health Service Act, 58 Stat. 690 (42 U.S.C. 216); 45 CFR 16.3(c).

SOURCE: 54 FR 34770, Aug. 22, 1989, unless otherwise noted.

§ 50.401 What is the purpose of this subpart?

This subpart establishes an informal procedure for the resolution of certain postaward grant and cooperative agreement disputes within the agencies and offices identified in § 50.402.

[63 FR 66062, Dec. 1, 1998]

§ 50.402 To what programs do these regulations apply?

This subpart applies to all grant and cooperative agreement programs, except block grants, which are administered by the National Institutes of Health; the Health Resources and Services Administration; the Centers for Disease Control and Prevention; the Agency for Toxic Substances and Disease Registry; the Food and Drug Administration; and the Office of the Assistant Secretary for Public Health and Science. For purposes of this regulation, the entities are hereinafter referred to as ''agencies.''

[63 FR 66062, Dec. 1, 1998]

§ 50.403 What is the policy basis for these procedures?

The Secretary of Health and Human Services has established a Departmental Appeals Board for the purpose of providing a fair and flexible process for the appeal of written final decisions involving certain grant and cooperative agreement programs administered by constituent agencies of the Department. The regulatory provision which

establishes the circumstances under which the Board will accept an appeal (45 CFR 16.3) provides, among other things, that the appellant must have exhausted any preliminary appeal process required by regulation before a formal appeal to the Departmental Board will be allowed. This subpart provides such an informal preliminary procedure for resolution of disputes in order to preclude submission of cases to the Departmental Appeals Board before an agency identified in § 50.402 has had an opportunity to review decisions of its officials and to settle disputes with grantees.

[54 FR 34770, Aug. 22, 1989, as amended at 63 FR 66062, Dec. 1, 1998]

§ 50.404 What disputes are covered by these procedures?

(a) These procedures are applicable to the following adverse determinations under discretionary project grants and cooperative agreements (both referred to in this subpart as grants) issued by the agencies identified at § 50.402;

(1) Termination, in whole or in part, of a grant for failure of the grantee to carry out its approved project in accordance with the applicable law and the terms and conditions of such assistance or for failure of the grantee otherwise to comply with any law, regulation, assurance, term, or condition applicable to the grant.

(2) A determination that an expenditure not allowable under the grant has been charged to the grant or that the grantee has otherwise failed to discharge its obligation to account for grant funds.

(3) A determination that a grant is void.

(4) A denial of a noncompeting continuation award under the project period system of funding where the denial is for failure to comply with the terms of a previous award.

(b) A determination subject to this subpart may not be reviewed by the review committee described in § 50.405 unless an officer or employee of the agency has notified the grantee in writing of the adverse determination. The notification must set forth the reasons for the determination in sufficient detail to enable the grantee to respond and must inform the grantee of the opportunity for review under this subpart.

[54 FR 34770, Aug. 22, 1989, as amended at 63 FR 66062, Dec. 1, 1998]

§ 50.405 What is the structure of review committees?

The head of the agency, or his or her designee, shall appoint review committees to review adverse determinations made by officials for programs under their jurisdiction. A minimum of three employees shall be appointed (one of whom shall be designated as chairperson) either on an ad hoc, case-by-case basis, or as regular members of review committees for such terms as may be designated. None of the members of the review committee reviewing any given appeal may be from the office of the responsible official whose adverse determination is being appealed (e.g., project officer, grants specialist, program manager, grants management officer).

[54 FR 34770, Aug. 22, 1989, as amended at 63 FR 66062, Dec. 1, 1998]

§ 50.406 What are the steps in the process?

(a) A grantee with respect to whom an adverse determination described in § 50.404(a) above has been made and who desires a review of that determination must submit a request for such review to the head of the appropriate agency or his or her designee no later than 30 days after the written notification of the determination is received, except that if the grantee shows good cause why an extension of time should be granted, the head of the appropriate agency or his or her designee may grant an extension of time.

(b) The request for review must include a copy of the adverse determination, must identify the issue(s) in dispute, and must contain a full statement of the grantee's position with respect to such issue(s) and the pertinent facts and reasons in support of the grantee's position. In addition to the required written statement, the grantee shall provide copies of any documents supporting its claim.

(c) When a request for review has been filed under this subpart with respect to an adverse determination, no action may be taken by the awarding

agency pursuant to such determination until the request has been disposed of, except that the filing of the request shall not affect any authority which the agency may have to suspend assistance or otherwise to withhold or defer payments under the grant during proceedings under this subpart. This paragraph does not require the awarding agency to provide continuation funding during the appeal process to a grantee whose noncompeting continuation award has been denied.

(d) Upon receipt of a request for review, the head of the agency or his or her designee will make a decision as to whether the dispute is reviewable under this subpart and will promptly notify the grantee and the office responsible for the adverse determination of this decision. If the head of the agency or his or her designee determines that the dispute is reviewable, he or she will forward the matter to the review committee appointed under § 50.405.

(e) The agency involved will provide the review committee appointed under § 50.405 with copies of all relevant background materials (including applications(s), award(s), summary statement(s), and correspondence) and any additional pertinent information available. These materials must be tabbed and organized chronologically and accompanied by an indexed list identifying each document.

(f) The grantee shall be given an opportunity to provide the review committee with additional statements and documentation not provided in the request for review described in paragraph (b) of this section. This additional submission, which must be organized and indexed as indicated under paragraph (e) of this section, should provide only material that is relevant to the review committee's deliberation of the issues in the case.

(g) The review committee may, at its discretion, invite the grantee and/or the agency staff to discuss the pertinent issues with the committee and to submit such additional information as the committee deems appropriate.

(h) Based on its review, the review committee will prepare a written decision to be signed by the chairperson and each of the other committee members. The review committee shall send the written decision with a transmittal letter to the grantee and shall send a copy of both to the official responsible for the adverse determination. If the decision is adverse to the grantee's position, the transmittal letter must state the grantee's right to appeal to the Departmental Appeals Board under 45 CFR part 16.

[54 FR 34770, Aug. 22, 1989, as amended at 63 FR 66063, Dec. 1, 1998]

Subpart E—Maximum Allowable Cost for Drugs

AUTHORITY: Sec. 215, Public Health Service Act, 58 Stat. 690 (42 U.S.C. 216).

SOURCE: 40 FR 34514, Aug. 15, 1975, unless otherwise noted.

§ 50.501 Applicability.

This subpart is applicable to programs or projects for health services which are supported in whole or in part by Federal financial assistance, whether by grant or contract, administered by the Public Health Service. It applies to Federal funds and to non-Federal funds which are required to be expended as a condition to receiving Federal funds under such programs or projects.

§ 50.502 Definitions.

As used in this subpart:

(a) *Public Health Service* means the Office of the Assistant Secretary for Health, Health Resources and Services Administration, National Institutes of Health, Centers for Disease Control, Alcohol, Drug Abuse and Mental Health Administration, Food and Drug Administration, and all of their constituent agencies.

(b) *Secretary* means the Secretary of Health and Human Services and any other officer or employee of the Department of Health and Human Services to whom the authority involved has been delegated.

(c) *Program funds* means (1) Federal funds provided through grant or contract to support a program or project

covered by § 50.501, and (2) any non-Federal funds that are required as a condition of such grant or contract to be expended to carry out such program or project.

(d) *Provider* means one who furnishes medical or pharmaceutical services or supplies for which program funds may be expended under any of the programs or projects described in § 50.501.

(e) *Acquisition cost* means the price generally and currently paid by providers for a drug marketed or sold by a particular formulator or labeler in the package size of drug most frequently purchased by providers, as determined by the Secretary on the basis of drug price information furnished by the Department.

[40 FR 34514, Aug. 15, 1975, as amended at 49 FR 38109, Sept. 27, 1984]

§ 50.503 Policy.

It is the policy of the Secretary that program funds which are utilized for the acquisition of drugs be expended in the most economical manner feasible. In furtherance of this policy, the Secretary has established, in 45 CFR part 19, a procedure for determining the Maximum Allowable Cost for drugs which are purchased with program funds.

§ 50.504 Allowable cost of drugs.

(a) The maximum amount which may be expended from program funds for the acquisition of any drug shall be the lowest of

(1) The maximum allowable cost (MAC) of the drug, if any, established in accordance with 45 CFR part 19, plus a dispensing fee determined by the Secretary in accordance with paragraph (b) of this section, to be reasonable;

(2) The acquisition cost of the drug plus a dispensing fee determined by the Secretary, in accordance with paragraph (b) of this section, to be reasonable; or

(3) The provider's usual and customary charge to the public for the drug; *Provided,* That the MAC established for any drug shall not apply to a brand of that drug prescribed for a patient which the prescriber has certified, in accordance with paragraph (c) of this section, is medically necessary for that patient; *And Provided further,* That where compensation for drug dispensing is included in other costs allowable under the applicable program statute and regulations, the terms and conditions of the grant or contract, and the applicable cost principles prescribed in 45 CFR part 74, no separate dispensing fee will be recognized.

(b) In determining whether a dispensing fee is reasonable, the Secretary will take into account:

(1) Cost components such as overhead, professional services, and profits,

(2) Payment practices of third-party payment organizations, including other Federal programs such as titles XVIII and XIX of the Social Security Act; and

(3) Any surveys by States, universities or others of costs of pharmacy operations and the fees charged in the particular area.

(c) A certification by a prescriber, pursuant to paragraph (a) of this section, that a brand of drug is medically necessary for a particular patient shall be in the prescriber's own handwriting, in such form and manner as the Secretary may prescribe. An example of an acceptable certification is the notation ''brand necessary''. A procedure for checking a box on a form will not constitute an acceptable certification.

Subpart F—Responsibility of Applicants for Promoting Objectivity in Research for Which PHS Funding Is Sought

AUTHORITY: 42 U.S.C. 216, 289b–1, 299c–3.

SOURCE: 60 FR 35815, July 11, 1995; 60 FR 39076, July 31, 1995, unless otherwise noted.

§ 50.601 Purpose.

This subpart promotes objectivity in research by establishing standards to ensure there is no reasonable expectation that the design, conduct, or reporting of research funded under PHS grants or cooperative agreements will be biased by any conflicting financial interest of an Investigator.

§ 50.602 Applicability.

This subpart is applicable to each Institution that applies for PHS grants or cooperative agreements for research and, through the implementation of

this subpart by each Institution, to each Investigator participating in such research (see § 50.604(a)); provided, that this subpart does not apply to SBIR Program Phase I applications. In those few cases where an individual, rather than an institution, is an applicant for PHS grants or cooperative agreements for research, PHS Awarding Components will make case-by-case determinations on the steps to be taken to ensure that the design, conduct, and reporting of the research will not be biased by any conflicting financial interest of the individual.

§ 50.603 Definitions.

As used in this subpart:

HHS means the United States Department of Health and Human Services, and any components of the Department to which the authority involved may be delegated.

Institution means any domestic or foreign, public or private, entity or organization (excluding a Federal agency).

Investigator means the principal investigator and any other person who is responsible for the design, conduct, or reporting of research funded by PHS, or proposed for such funding. For purposes of the requirements of this subpart relating to financial interests, ''Investigator'' includes the Investigator's spouse and dependent children.

PHS means the Public Health Service, an operating division of the U.S. Department of Health and Human Services, and any components of the PHS to which the authority involved may be delegated.

PHS Awarding Component means the organizational unit of the PHS that funds the research that is subject to this subpart.

Public Health Service Act or *PHS Act* means the statute codified at 42 U.S.C. 201 *et seq.*

Research means a systematic investigation designed to develop or contribute to generalizable knowledge relating broadly to public health, including behavioral and social-sciences research. The term encompasses basic and applied research and product development. As used in this subpart, the term includes any such activity for which research funding is available from a PHS Awarding Component through a grant or cooperative agreement, whether authorized under the PHS Act or other statutory authority.

Significant Financial Interest means anything of monetary value, including but not limited to, salary or other payments for services (e.g., consulting fees or honoraria); equity interests (e.g., stocks, stock options or other ownership interests); and intellectual property rights (e.g., patents, copyrights and royalties from such rights). The term does not include:

(1) Salary, royalties, or other remuneration from the applicant institution;

(2) Any ownership interests in the institution, if the institution is an applicant under the SBIR Program;

(3) Income from seminars, lectures, or teaching engagements sponsored by public or nonprofit entities;

(4) Income from service on advisory committees or review panels for public or nonprofit entities;

(5) An equity interest that when aggregated for the Investigator and the Investigator's spouse and dependent children, meets both of the following tests: Does not exceed $10,000 in value as determined through reference to public prices or other reasonable measures of fair market value, and does not represent more than a five percent ownership interest in any single entity; or

(6) Salary, royalties or other payments that when aggregated for the Investigator and the Investigator's spouse and dependent children over the next twelve months, are not expected to exceed $10,000.

Small Business Innovation Research (SBIR) Program means the extramural research program for small business that is established by the Awarding Components of the Public Health Service and certain other Federal agencies under Pub. L. 97–219, the Small Business Innovation Development Act, as amended. For purposes of this subpart, the term SBIR Program includes the Small Business Technology Transfer (STTR) Program, which was established by Pub. L. 102–564.

§ 50.604 Institutional responsibility regarding conflicting interests of investigators.

Each Institution must:

(a) Maintain an appropriate written, enforced policy on conflict of interest that complies with this subpart and inform each Investigator of that policy, the Investigator's reporting responsibilities, and of these regulations. If the Institution carries out the PHS-funded research through subgrantees, contractors, or collaborators, the Institution must take reasonable steps to ensure that Investigators working for such entities comply with this subpart, either by requiring those Investigators to comply with the Institution's policy or by requiring the entities to provide assurances to the Institution that will enable the Institution to comply with this subpart.

(b) Designate an institutional official(s) to solicit and review financial disclosure statements from each Investigator who is planning to participate in PHS-funded research.

(c)(1) Require that by the time an application is submitted to PHS each Investigator who is planning to participate in the PHS-funded research has submitted to the designated official(s) a listing of his/her known Significant Financial Interests (and those of his/her spouse and dependent children):

(i) That would reasonably appear to be affected by the research for which PHS funding is sought; and

(ii) In entities whose financial interests would reasonably appear to be affected by the research.

(2) All financial disclosures must be updated during the period of the award, either on an annual basis or as new reportable Significant Financial Interests are obtained.

(d) Provide guidelines consistent with this subpart for the designated official(s) to identify conflicting interests and take such actions as necessary to ensure that such conflicting interests will be managed, reduced, or eliminated.

(e) Maintain records of all financial disclosures and all actions taken by the Institution with respect to each conflicting interest for at least three years from the date of submission of the final expenditures report or, where applicable, from other dates specified in 45 CFR 74.53(b) for different situations.

(f) Establish adequate enforcement mechanisms and provide for sanctions where appropriate.

(g) Certify, in each application for the funding to which this subpart applies, that:

(1) There is an effect at that Institution a written and enforced administrative process to identify and manage, reduce or eliminate conflicting interests with respect to all research projects for which funding is sought from the PHS,

(2) Prior to the Institution's expenditure of any funds under the award, the Institution will report to the PHS Awarding Component the existence of a conflicting interest (but not the nature of the interest or other details) found by the institution and assure that the interest has been managed, reduced or eliminated in accordance with this subpart; and, for any interest that the Institution identifies as conflicting subsequent to the Institution's initial report under the award, the report will be made and the conflicting interest managed, reduced, or eliminated, at least on an interim basis, within sixty days of that identification;

(3) The Institution agrees to make information available, upon request, to the HHS regarding all conflicting interests identified by the Institution and how those interests have been managed, reduced, or eliminated to protect the research from bias; and

(4) The Institution will otherwise comply with this subpart.

§ 50.605 Management of conflicting interests.

(a) The designated official(s) must: Review all financial disclosures; and determine whether a conflict of interest exists and, if so, determine what actions should be taken by the institution to manage, reduce or eliminate such conflict of interest. A conflict of interest exists when the designated official(s) reasonably determines that a Significant Financial Interest could directly and significantly affect the design, conduct, or reporting of the PHS-

funded research. Examples of conditions or restrictions that might be imposed to manage conflicts of interest include, but are not limited to:

(1) Public disclosure of significant financial interests;

(2) Monitoring of research by independent reviewers;

(3) Modification of the research plan;

(4) Disqualification from participation in all or a portion of the research funded by the PHS;

(5) Divestiture of significant financial interests; or

(6) Severance of relationships that create actual or potential conflicts.

(b) In addition to the types of conflicting financial interests described in this paragraph that must be managed, reduced, or eliminated, an Institution may require the management of other conflicting financial interests, as the Institution deems appropriate.

§ 50.606 Remedies.

(a) If the failure of an Investigator to comply with the conflict of interest policy of the Institution has biased the design, conduct, or reporting of the PHS-funded research, the Institution must promptly notify the PHS Awarding Component of the corrective action taken or to be taken. The PHS Awarding Component will consider the situation and, as necessary, take appropriate action, or refer the matter to the Institution for further action, which may include directions to the Institution on how to maintain appropriate objectivity in the funded project.

(b) The HHS may at any time inquire into the Institutional procedures and actions regarding conflicting financial interests in PHS-funded research, including a requirement for submission of, or review on site, all records pertinent to compliance with this subpart. To the extent permitted by law, HHS will maintain the confidentiality of all records of financial interests. On the basis of its review of records and/or other information that may be available, the PHS Awarding Component may decide that a particular conflict of interest will bias the objectivity of the PHS-funded research to such an extent that further corrective action is needed or that the Institution has not managed, reduced, or eliminated the conflict of interest in accordance with this subpart. The PHS Awarding Component may determine that suspension of funding under 45 CFR 74.62 is necessary until the matter is resolved.

(c) In any case in which the HHS determines that a PHS-funded project of clinical research whose purpose is to evaluate the safety or effectiveness of a drug, medical device, or treatment has been designed, conducted, or reported by an Investigator with a conflicting interest that was not disclosed or managed as required by this subpart, the Institution must require the Investigator(s) involved to disclose the conflicting interest in each public presentation of the results of the research.

§ 50.607 Other HHS regulations that apply.

Several other regulations and policies apply to this subpart.

They include, but are not necessarily limited to:

42 CFR part 50, subpart D—Public Health Service grant appeals procedure
45 CFR part 16—Procedures of the Departmental Grant Appeals Board
45 CFR part 74—Uniform Administrative Requirements for Awards and Subawards to Institutions of Higher Education, Hospitals, Other Non-Profit Organizations, and Commercial Organizations; and Certain Grants and Agreements with States, Local Governments and Indian Tribal Governments
45 CFR part 76—Government-wide debarment and suspension (non-procurement)
45 CFR part 79—Program Fraud Civil Remedies
45 CFR part 92—Uniform Administrative Requirements for Grants and Cooperative Agreements to State and Local Governments

PART 51—REQUIREMENTS APPLICABLE TO THE PROTECTION AND ADVOCACY FOR INDIVIDUALS WITH MENTAL ILLNESS PROGRAM

Sec.
51.1 Scope.
51.2 Defintitions.

Subpart A—Basic Requirements

51.3 Formula for determining allotments.
51.4 Grants administration requirements.
51.5 Eligibility for allotment.
51.6 Use of allotments.

51.7 Eligibility for protection and advocacy services.
51.8 Annual reports.
51.9 [Reserved]
51.10 Remedial actions.
51.11–51.20 [Reserved]

Subpart B—Program Administration and Priorities

51.21 Contracts for program operations.
51.22 Governing authority.
51.23 Advisory council.
51.24 Program priorities.
51.25 Grievance procedure.
51.26 Conflicts of interest.
51.27 Training.
51.28–51.30 [Reserved]

Subpart C—Protection and Advocacy Services

51.31 Conduct of protection and advocacy activities.
51.32 Resolving disputes.
51.33–51.40 [Reserved]

Subpart D—Access to Records, Facilities and Individuals

51.41 Access to records.
51.42 Access to Facilities and residents.
51.43 Denial of delay or access.
51.44 [Reserved]
51.45 Confidentiality of protection and advocacy system records.
51.46 Disclosing information obtained from a provider of mental health services.

AUTHORITY: 42 U.S.C. 10801, *et seq.*

SOURCE: 63 FR 53564, Oct. 15, 1997, unless otherwise noted.

§ 51.1 Scope.

The provisions of this part apply to recipients of Federal assistance under the Protection and Advocacy for Mentally Ill Individuals Act of 1986, as amended.

§ 51.2 Definitions.

In addition to the definitions in section 102 of the Act, as amended, the following definitions apply:

Abuse means any act or failure to act by an employee of a facility rendering care or treatment which was performed, or which was failed to be performed, knowingly, recklessly, or intentionally, and which caused, or may have caused, injury or death to an individual with mental illness, and includes but is not limited to acts such as: rape or sexual assault; striking; the use of excessive force when placing an individual with mental illness in bodily restrains; the use of bodily or chemical restraints which is not in compliance with Federal and State laws and regulations; verbal, nonverbal, mental and emotional harassment; and any other practice which is likely to cause immediate physical or psychological harm or result in long-term harm if such practices continue.

Act means the Protection and Advocacy for Mentally Ill Individuals Act of 1986, as amended, also referred to as Protection and Advocacy for Individuals with Mental Illness Act.

ADD means the Administration on Developmental Disabilities within the Administration for Children and Families, Department of Health and Human Services.

Care or Treatment means services provided to prevent, identify, reduce or stabilize mental illness or emotional impairment such as mental health screening, evaluation, counseling, biomedical, behavioral and psychotherapies, supportive or other adjunctive therapies, medication supervision, special education and rehabilitation, even if only ''as needed'' or under a contractual arrangement.

Center or *CMHS* means the Center for Mental Health Services, a component of the Substance Abuse and Mental Health Services Administration.

Complaint includes, but is not limited to any report or communication, whether formal or informal, written or oral, received by the P&A system, including media accounts, newspaper articles, telephone calls (including anonymous calls) from any source alleging abuse or neglect of an individual with mental illness.

Department or *HHS* means the U.S. Department of Health and Human Services.

Designated Official is the State official or public or private entity empowered by the Governor or State legislature to be accountable for the proper use of funds by the P&A system.

Director means the Director of the Center for Mental Health Services, Substance Abuse and Mental Health Services Administration, or his or her designee.

Facility includes any public or private residential setting that provides overnight care accompanied by treatment services. Facilities include, but are not limited to the following: general and psychiatric hospitals, nursing homes, board and care homes, community housing, juvenile detention facilities, homeless shelters, and jails and prisons, including all general areas as well as special mental health or forensic units.

Fiscal Year or *FY* means the Federal fiscal year (October 1–September 30) unless otherwise specified.

Full Investigation is based upon a complaint or a determination of probable cause and means the access to facilities, clients and records authorized under this part that is necessary for a P&A system to make a determination about whether an allegation of abuse or neglect is taking place or has taken place. Full investigations may be conducted independently or in cooperation with other agencies authorized to conduct similar investigations.

Governor means the chief executive officer of the State, Territory or the District of Columbia, or his or her designee, who has been formally designated to act for the Governor in carrying out the requirements of the Act and this part.

Individual with Mental Illness means an individual who has a significant mental illness or emotional impairment, as determined by a mental health professional qualified under the laws and regulations of the State and

(1) Who is an inpatient or resident in a facility rendering care or treatment, even if the whereabouts of such impatient or resident is unknown;

(2) Who is in the process of being admitted to a facility rendering care or treatment, including persons being transported to such a facility, or

(3) Who is involuntarily confined in a detention facility, jail or prison.

Legal Guardian, Conservator, and Legal Representative all mean an individual whose appointment is made and regularly reviewed by a State court or agency empowered under State law to appoint and review such officers, and having authority to consent to health/mental health care or treatment of an individual with mental illness. It does not include persons acting only as a representative payee, persons acting only to handle financial payments, attorneys or persons acting on behalf of an individual with mental illness only in individual legal matters, or officials responsible for the provision of health or mental health services to an individual with mental illness, or their designees.

Neglect means a negligent act or omission by an individual responsible for providing services in a facility rendering care or treatment which caused or may have caused injury or death to an individual with mental illness or which placed an individual with mental illness at risk of injury or death, and includes, but is not limited to, acts or omissions such as failure to: establish or carry out an appropriate individual program or treatment plan (including a discharge plan); provide adequate nutrition, clothing, or health care; and the failure to provide a safe environment which also includes failure to maintain adequate numbers of appropriately trained staff.

Private Entity means a nonprofit or for-profit corporation, partnership or other nongovernmental organization.

Probable cause means reasonable grounds for belief that an individual with mental illness has been, or may be at significant risk of being subject to abuse or neglect. The individual making such determination may base the decision on reasonable inferences drawn from his or her experience or training regarding similar incidents, conditions or problems that are usually associated with abuse or neglect.

Program means activities carried out by the P&A system and operating as part of a P&A system to meet the requirements of the Act.

Public Entity means an organizational unit of a State or local government or a quasi-governmental entity with one or more governmental powers.

System means the organization or agency designated in a State to administer and operate a protection and advocacy program under Part C of the Developmental Disabilities Assistance and Bill of Rights Act (42 U.S.C. 6041, 6042) and thereby eligible to administer a program for individuals with mental illness.

Subpart A—Basic Requirements

§ 51.3 Formula for determining allotments.

The Secretary shall make allotments to eligible Systems from amounts apportioned each year under the Act on the basis of a formula prescribed by the Secretary in accordance with the requirements of sections 112 and 113 of the Act (42 U.S.C. 10822 and 10823).

§ 51.4 Grants administration requirements.

The following parts of titles 42 and 45 CFR apply to grants funded under this part.

42 CFR Part 50, Subpart D.
45 CFR Part 16—Procedures of the Departmental Grant Appeal Board.
45 CFR Part 74—Administration of Grants.
45 CFR Part 75—Informal Grant Appeals Procedures.
45 CFR Part 76—Government-wide Debarment and Suspension (Nonprocurement) and Government-wide Requirements for Drug-Free Workplace.
45 CFR Part 80—Nondiscrimination under Programs Receiving Federal Assistance through the Department of Health and Human Services—Effectuation of Title VI of the Civil Rights Act of 1964.
45 CFR Part 81—Practice and Procedure for Hearings under Part 80 of This Title.
45 CFR Part 84—Nondiscrimination on the Basis of Handicap in Programs and Activities Receiving or Benefiting from Federal Financial Assistance.
45 CFR Part 86—Nondiscrimination on the Basis of Sex in Education Programs and Activities Receiving Federal Financial Assistance.
45 CFR Part 91—Nondiscrimination on the Basis of Age in Education Programs and Activities Receiving Federal Financial Assistance from HHS.
45 CFR Part 92—Uniform Administrative Requirements for Grants and Cooperative Agreements to State and Local Governments.
45 CFR Part 93—New Restrictions on Lobbying.
45 CFR Part 1386, subpart A.

§ 51.5 Eligibility for allotment.

(a) Federal financial assistance for protection and advocacy activities for individuals with mental illness will be given only to a System that has been established under Part C of the Developmental Disabilities Assistance and Bill of Rights Act (42 U.S.C. 6041, *et seq.*) and designated in accordance with 45 CFR part 1386, subpart B.

(b) The P&A system must meet the requirements of sections 105 and 111 of the Act (42 U.S.C. 10805 and 10821) and that P&A system must be operational. Each system shall submit an application at the beginning of each PAIMI authorization period. This application shall contain at a minimum the program priorities and budget for the first year of the authorization period and the required assurances and certifications. Thereafter, the system shall submit yearly updates of the budget and program priorities for the upcoming fiscal year through its annual report.

(c) Written assurances of compliance with sections 105 and 111 of the Act (42 U.S.C. 10805 and 10821) and other requirements of the Act and this part shall be submitted by the P&A system in the format designated by the Director. These assurances will remain in effect for the period specified in the application for funds unless changes occur within the State which affect the functioning of the P&A system, in which case an amendment will be required 30 days prior to the effective date of the change. The P&A system shall also provide the Department the name of the designated official.

(d) The Governor's written assurance that the allotments made available under the Act will be used to supplement and not to supplant the level of non-Federal funds available in the State to protect and advocate the rights of individuals with mental illness shall be submitted by the P&A system. The Governor may provide this assurance along with the assurances provided to ADD under 45 CFR part 1386, as long as it can reasonably be construed as applying to the PAIMI program. Any future ''supplement and not supplant'' assurance shall explicitly refer to the PAIMI program.

§ 51.6 Use of allotments.

(a) Allotments must be used to supplement and not to supplant the level of non-Federal funds available in the State to protect and advocate the rights of individuals with mental illness.

(b) Allotments may not be used to support lobbying activities to influence proposed or pending Federal legislation or appropriations. This restriction does not affect the right of any P&A system, organization or individual to petition Congress or any other government body or official using other resources.

(c) Allotments may not be used to produce or distribute written, audio or visual materials or publicity intended or designed to support or defeat any candidate for public office.

(d) If an eligible P&A system is a public entity, that P&A system shall not be required by the State to obligate more than five percent of its annual allotment for State oversight administrative expenses under this grant such as costs of internal or external evaluations, monitoring or auditing. This restriction does not include:

(1) Salaries, wages and benefits of program staff;

(2) Costs associated with attending governing board or advisory council meetings; or

(3) Expenses associated with the provision of training or technical assistance for staff, contractors, members of the governing board or advisory council.

(e) No more than ten percent of each annual allotment may be used for providing technical assistance and training, including travel expenses for staff, contractors, or members of the governing board or advisory council as defined in §51.27.

(f) Allotments may be used to pay the otherwise allowable costs incurred by a P&A system in bringing lawsuits in its own right to redress incidents of abuse or neglect, discrimination, and other rights violations impacting on individuals with mental illness and when it appears on behalf of named plaintiffs or a class of plaintiffs for such purposes.

§51.7 Eligibility for protection and advocacy services.

In accordance with section 105(a)(1)(C) of the Act (42 U.S.C. 10805(a)(1)(C)) and the priorities established by the P&A system governing authority, together with the advisory council, pursuant to section 105(c)(2)(B) of the Act (42 U.S.C. 10805(c)(2)(B)), allotments may be used:

(a) To provide protection and advocacy services for:

(1) Individuals with mental illness as defined in 42 U.S.C. 10802(4) and 10805(a), including persons who report matters which occurred while they were individuals with mental illness;

(2) Persons who were individuals with mental illness who are residents of the State, but only with respect to matters which occur within 90 days after the date of the discharge of such individuals from a facility providing care or treatment; and

(3) Individuals with mental illness in Federal facilities rendering care or treatment who request representation by the eligible P&A system. Representation may be requested by an individual with mental illness, or by a legal guardian, conservator or legal representative.

(b) To provide representation of clients in civil commitment proceedings if the P&A system is acting on behalf of an eligible individual to obtain judicial review of his or her commitment in order to appeal or otherwise challenge acts or omissions which have subjected the individual to abuse or neglect or otherwise violated his or her rights. This restriction does not prevent a P&A system from representing clients in commitment or recommitment proceedings using other resources so long as this representation does not conflict with responsibilities under the Act.

§51.8 Annual reports.

By January 1 of each year, a report shall be submitted, pursuant to section 105(a)(7) of the Act (42 U.S.C. 10805(a)(7)), to the Secretary which is in the format designated by the Secretary.

EFFECTIVE DATE NOTE: At 62 FR 53564, Oct. 15, 1997, §51.8 was added. This section contains information collection and recordkeeping requirements and will not become effective until approval has been given by the Office of Management and Budget.

§ 51.9 [Reserved]

§ 51.10 Remedial actions.

Failure to submit an annual report in the designated format on time or to submit requested information and documentation, corrective action plans and ongoing implementation status reports in response to Federal review and monitoring activities or to satisfy any other requirement of the Act, this part, or other requirements, may be considered a breach of the terms and conditions of the grant award and may required remedial action, such as the suspension or termination of an active grant, withholding of payments or converting to a reimbursement method of payment. Any remedial actions shall be taken consistent with 45 CFR Part 74 and 42 CFR Part 50, as appropriate.

EFFECTIVE DATE NOTE: At 62 FR 53564, Oct. 15, 1997, § 51.10 was added. This section contains information collection and recordkeeping requirements and will not become effective until approval has been given by the Office of Management and Budget.

§§ 51.11–51.20 [Reserved]

Subpart B—Program Administration and Priorities

§ 51.21 Contracts for program operations.

(a) An eligible P&A system should work cooperatively with existing advocacy agencies and groups and, where appropriate, consider entering into contracts for protection and advocacy services with organizations already working on behalf of individuals with metal illness. Special consideration should be given to contracting for the services of groups run by individuals who have received or are receiving mental health services or by family members of such individuals.

(b) An eligible P&A system may contract for the operation of all or part of its program with another public or private nonprofit organization with demonstrated experience in working with individuals with mental illness provided that:

(1) Any organization that will operate the full program meets the requirements of section 104(a)(1), 105 and 111 of the Act (42 U.S.C. 10804(a)(1), 10805 and 10821) and has the capacity to perform protection and advocacy activities throughout the State;

(2) The eligible P&A system institutes oversight and monitoring procedures which ensure that this system will be able to meet all applicable terms, conditions and obligations of the Federal grant;

(3) The eligible P&A system and the contractor organization enter into a written agreement that includes at least the following:

(i) A description of the protection and advocacy services to be provided;

(ii) The type of personnel, their qualifications and training;

(iii) The methods to be used;

(iv) A timetable for performance;

(v) A budget;

(vi) Assurances that the contractor will meet all applicable terms and conditions of the grant;

(vii) Assurances that the contractor has adequate management and fiscal systems in place, including insurance coverage, if appropriate:

(viii) Assurances that the contractor's staff is trained to provide advocacy services to and conduct full investigations on behalf of individuals with mental illness; and

(ix) Assurances that the contractor staff is trained to work with family members of clients served by the P&A system where the clients are:

(A) Minors;

(B) Legally competent and choose to involve the family member; or,

(C) Legally incompetent and the legal guardians, conservators or other legal representatives are family members.

§ 51.22 Governing authority.

(a) Each P&A system shall have a governing authority responsible for its planning, designing, implementing and functioning. It shall, jointly with the advisory council, annually establish program priorities and policies.

(b) If the P&A system is organized with a multi-member governing board:

(1) Each P&A system shall establish policies and procedures for the selection of its governing board members and for the board evaluation of the P&A system director. The terms of board members shall be staggered and

for 4 years except that any member appointed to fill a vacancy for an unexpired term shall serve for the remainder of such term. A member who has been appointed for a term of 4 years may not be reappointed to the governing board during the 2-year period beginning on the date on which such 4-year term expired.

(2) The board shall be composed of members who broadly represent or are knowledgeable about the needs of the clients served by the P&A system and shall include a significant representation of individuals with mental illness who are, or have been eligible for services, or have received or are receiving mental health services, and family members, guardians, advocates, or authorized representatives of such individuals.

(3) If the governing authority is organized as a private nonprofit entity, the chairperson of the advisory council shall be a member of the governing board.

(c) Continuing efforts shall be made to include members of racial and ethnic minority groups as board members.

(d) Any member of the advisory council may also serve on the governing board.

§51.23 Advisory council.

(a) Each P&A system shall establish an advisory council to:

(1) Provide independent advice and recommendations to the system.

(2) Work jointly with the governing authority in the development of policies and priorities.

(3) Submit a section of the system's annual report as required under §51.8.

(b) Members of the council shall include attorneys, mental health professionals, individuals from the public who are knowledgeable about mental illness, the advocacy needs of persons with mental illness and have demonstrated a substantial commitment to improving mental health services, a provider of mental health services, individuals who have received or are receiving mental health services and family members of such individuals. Continuing efforts shall be made to include members of racial and ethnic minority groups on the advisory council.

(1) At least 60 percent of the membership of the advisory council shall be comprised of individuals who have received or are receiving mental health services or who are family members of such individuals. At least one family member shall be a primary care giver for an individual who is currently a minor child or youth who is receiving or has received mental health services;

(2) The council shall be chaired by an individual who has received or is receiving mental health services or who is a family member of such an individual;

(3) The advisory council shall meet no less than three times annually. The terms of council members shall be staggered and for 4 years except that any member appointed to fill a vacancy for an unexpired term shall serve for the remainder of such term. A member who has been appointed for a term of 4 years may not be reappointed to the council during the 2-year period beginning on the date on which such 4-year term expired.

(c) Each P&A system shall provide its advisory council with reports, materials and fiscal data to enable review of existing program policies, priorities and performance outcomes. Such submissions shall be made at least annually and shall report expenditures for the past two fiscal years, as well as projected expenses for the next fiscal year, identified by budget category (e.g., salary and wages, contract for services, administrative expenses) including the amount allotted for training of each the advisory council, governing board and staff.

(d) Reimbursement of expenses. (1) Allotments may be used to pay for all or a part of the expenses incurred by members of the advisory council in order to participate in its activities. Expenses may include transportation costs, parking, meals, hotel costs, per diem expenses, stipends or subsistence allowances, and the cost of day care or child care (or its equivalent for the child's travel and subsistence expenses) for their dependents with mental illness or developmental disabilities.

(2) Each P&A system shall establish its own policies and procedures for reimbursement of expenses of council members, taking into account the

needs of individual council members, available resources, and applicable restrictions on use of grant funds, including the restrictions in §§ 51.31(e) and 51.6(e).

EFFECTIVE DATE NOTE: At 62 FR 53564, Oct. 15, 1997, § 51.23 was added. This section contains information collection and recordkeeping requirements and will not become effective until approval has been given by the Office of Management and Budget.

§ 51.24 Program priorities.

(a) Program priorities and policies shall be established annually by the governing authority, jointly with the advisory council. Priorities shall specify short-term program goals and objectives, with measurable outcomes, to implement the established priorities. In developing priorities, consideration shall be given to, at a minimum, case selection criteria, the availability of staff and monetary resources, and special problems and cultural barriers faced by individuals with mental illness who are multiply handicapped or who are members of racial or ethnic minorities in obtaining protection of their rights. Systemic and legislative activities shall also be addressed in the development and implementation of program priorities.

(b) Members of the public shall be given an opportunity, on an annual basis, to comment on the priorities established by, and the activities of, the P&A system. Procedures for public comment must provide for notice in a format accessible to individuals with mental illness, including such individuals who are in residential facilities, to family members and representatives of such individuals and to other individuals with disabilities. Procedures for public comment must provide for receipt of comments in writing or in person.

§ 51.25 Grievance procedure.

(a) The P&A system shall establish procedures to address grievances from:

(1) Clients or prospective clients of the P&A system to assure that individuals with mental illness have full access to the services of the program; and

(2) Individuals who have received or are receiving mental health services in the State, family members of such individuals, or representatives of such individuals or family members to assure that the eligible P&A system is operating in compliance with the Act.

(b) At a minimum, the grievance procedures shall provide for:

(1) An appeal to the governing authority from any final staff review and/or determination; in cases where the governing authority is the director of the P&A system, the final review and/or determination shall be made by a superior of the governing authority, e.g., a supervisor, or by an independent entity, e.g., an appointed board or committee.

(2) Reports, at least annually, to the governing authority and the advisory council describing the grievances received and processed and their resolution;

(3) Identification of individuals responsible for review;

(4) A timetable to ensure prompt notification concerning the grievance procedure to clients, prospective clients or persons denied representation, and to ensure prompt resolution;

(5) A written response to the grievant; and

(6) Protection of client confidentiality.

EFFECTIVE DATE NOTE: At 62 FR 53564, Oct. 15, 1997, § 51.25 was added. This section contains information collection and recordkeeping requirements and will not become effective until approval has been given by the Office of Management and Budget.

§ 51.26 Conflicts of interest.

The P&A system must develop appropriate policies and procedures to avoid actual or apparent conflict of interest involving clients, employees, contractors and subcontractors, and members of the governing authority and advisory council, particularly with respect to matters affecting client services, particular contracts and subcontracts, grievance review procedures, reimbursements and expenses, and the employment or termination of staff.

§ 51.27 Training.

A P&A system shall provide training for program staff, and may also provide training for contractors, governing board and advisory council members to

enhance the development and implementation of effective protection and advocacy services for individuals with mental illness, including at a minimum:

(a)(1) Training of program staff to work with family members of clients served by the program where the individual with mental illness is:

(i) A minor,

(ii) Legally competent and chooses to involve the family member; or

(iii) Legally incompetent and the legal guardian, conservator or other legal representative is a family member.

(2) This training may be provided by individuals who have received or are receiving mental health services and family members of such individuals.

(b) Training to enhance sensitivity to and understanding of individuals with mental illness who are members of racial or ethnic minorities and to develop strategies for outreach to those populations.

(c) Training to conduct full investigations of abuse or neglect.

§§ 51.28–51.30 [Reserved]

Subpart C—Protection and Advocacy Services

§ 51.31 Conduct of protection and advocacy activities.

(a) Consistent with State and Federal law and the canons of professional ethics, a P&A system may use any appropriate technique and pursue administrative, legal or other appropriate remedies to protect and advocate on behalf of individuals with mental illness to address abuse, neglect or other violations of rights.

(b) A P&A system shall establish policies and procedures to guide and coordinate advocacy activities. The P&A system shall not implement a policy or practice restricting the remedies which may be sought on behalf of individuals with mental illness or compromising the authority of the P&A system to pursue such remedies through litigation, legal action or other forms of advocacy. However, this requirement does not prevent the P&A system from placing limitations on case or client acceptance criteria developed as part of the annual priorities. Prospective clients must be informed of any such limitations at the time they request service.

(c) Wherever possible, the program should establish an ongoing presence in residential mental health care or treatment facilities, and relevant hospital units.

(d) Program activities should be carried out in a manner which allows program staff to:

(1) Interact regularly with those individuals who are current or potential recipients of protection and advocacy services;

(2) Interact regularly with staff providing care or treatment;

(3) Obtain information and review records; and

(4) Communicate with family members, social and community service workers and others involved in providing care or treatment.

(e) A P&A system may support or provide training, including related travel expenses, for individuals with mental illness, family members of such individuals, and other persons who are not program staff, contractors, or board or council members, to increase knowledge about protection and advocacy issues, to enhance leadership capabilities, or to promote Federal-State and intra-State cooperation on matter related to mental health system improvement. Decisions concerning the selection of individuals to receive such training shall be made in accordance with established policies, procedures and priorities of the P&A system.

(f) A P&A system may monitor, evaluate and comment on the development and implementation of Federal, State and local laws, regulations, plans, budgets, levies, projects, policies and hearings affecting individuals with mental illness as a part of federally funded advocacy activities. A P&A system shall carry out systemic advocacy—those efforts to implement changes in policies and practices of systems that impact persons with mental illness.

(g) Determination of ‘‘probable cause’’ may result from P&A system monitoring or other activities, including observation by P&A system personnel, and reviews of monitoring and

other reports prepared by others whether pertaining to individuals with mental illness or to general conditions affecting their health or safety.

(h) A P&A which is a public P&A system shall be free from hiring freezes, reductions in force, prohibitions on staff travel, or other policies imposed by the State to the extend that such policies would impact program staff or activities funded with Federal dollars and would prevent the P&A system from carrying out its mandates under the Act.

(i) A P&A system may exercise its authority under State law where the authority exceeds the authority required by the Act. However, State law must not diminish the required authority of the Act.

§ 51.32 Resolving disputes.

(a) Each P&A system is encouraged to develop and employ techniques such as those involving negotiation, conciliation and mediation to resolve disputes early in the protection and advocacy process.

(b) Disputes should be resolved whenever possible through nonadversarial process involving negotiation, mediation and conciliation. Consistent with State and Federal laws and canons of professional responsibility, family members should be involved in this process, as appropriate, where the individual with mental illness is:

(1) A minor,

(2) Legally competent and chooses to involve the family member, or

(3) Legally incompetent and the legal guardian, conservator or other legal representative is a family member or the legal guardian, conservator or other legal representative chose to involve the family member.

(c) A P&A system must exhaust in a timely manner all administrative remedies, where appropriate, prior to initiating legal action in a Federal or State court.

(d) Paragraph (c) of this section does not apply to any legal action instituted to prevent or eliminate imminent serious harm to an individual with mental illness nor does it apply in circumstances where administrative procedures do not exist. If in pursing administrative remedies, the P&A system determines that any matter with respect to an individual with mental illness with mental illness with not be resolved within a reasonable time, the P&A system may pursue alternative remedies, including initiating legal action.

(e) A P&A system shall be held to the standard of exhaustion of remedies provided under State and Federal law. The Act imposes no additional burden respecting exhaustion of remedies.

§§ 51.33–51.40 [Reserved]

Subpart D—Access to Records, Facilities and Individuals

§ 51.41 Access to records.

(a) Access to records shall be extended promptly to all authorized agents of a P&A system.

(b) A P&A system shall have access to the records of any of the following individuals with mental illness:

(1) An individual who is a client of the P&A system if authorized by that individual or the legal guardian, conservator or other legal representative.

(2) An individual, including an individual who has died or whose whereabouts is unknown to whom all of the following conditions apply:

(i) The individual, due to his or her mental or physical condition, is unable to authorize the P&A system to have access.

(ii) The individual does not have a legal guardian, conservator or other legal representative, or the individual's guardian is the State or one of its political subdivisions; and

(iii) A complaint or report has been received and the P&A system has determined that there is probable cause to believe that the individual has been or may be subject to abuse or neglect.

(3) An individual who has a legal guardian, conservator, or other legal representative, with respect to whom a complaint or report has been received by the P&A system and with respect to whom the P&A system has determined that there is probable cause to believe that the health or safety of the individual is in serious and immediate jeopardy, whenever all of the following conditions exists:

(i) The P&A system has made a good faith effort to contact the representative upon prompt receipt of the representative's name and address;

(ii) The P&A system has made a good faith effort to offer assistance to the representative to resolve the situation; and

(iii) The representative has failed or refused to act on behalf of the individual.

(c) Information and individual records, whether written or in another medium, draft or final, including handwritten notes, electronic files, photographs or video or audio tape records, which shall be available to the P&A system under the Act shall include, but not be limited to:

(1) Information and individual records, obtained in the course of providing intake, assessment, evaluation, supportive and other services, including medical records, financial records, and reports prepared or received by a member of the staff of a facility or program rendering care or treatment. This includes records stored or maintained in locations other than the facility or program as long as the system has obtained appropriate consent consistent with section 105(a)(4) of the Act. The system shall request of facilities that in requesting records from service providers or other facilities on residents that they indicate in the release form the records may be subject to review by a system.

(2) Reports prepared by an agency charged with investigating abuse neglect, or injury occurring at a facility rendering care or treatment, or by or for the facility itself, that describe any or all of the following:

(i) Abuse, neglect, or injury occurring at the facility;

(ii) The steps taken to investigate the incidents;

(iii) Reports and records, including personnel records, prepared or maintained by the facility, in connection with such reports of incidents; or

(iv) Supporting information that was relied upon in creating a report, including all information and records used or reviewed in preparing reports of abuse, neglect or injury such as records which describe persons who were interviewed, physical and documentary evidence that was reviewed, and the related investigative findings.

(3) Discharge planning records.

(4) Reports prepared by individuals and entities performing certification or licensure reviews, or by professional accreditation organizations, as well as related assessments prepared for the facility by its staff, contractors or related entities, except that nothing in this section is intended to preempt State law protecting records produced by medical care evaluation or peer review committees.

(5) Professional, performance, building or other safety standards, demographic and statistical information relating to the facility.

(d) A P&A system shall have reasonable access and authority to interview and examine all relevant records of any facility service recipient (consistent with the provisions of section 105(a)(4) of the Act) or employee.

(e) A P&A system shall be permitted to inspect and copy records, subject to a reasonable charge to offset duplicating costs.

§51.42 Access to Facilities and residents.

(a) Access to facilities and residents shall be extended to all authorized agents of a P&A system.

(b) A P&A system shall have reasonable unaccompanied access to public and private facilities and programs in the State which render care or treatment for individuals with mental illness, and to all areas of the facility which are used by residents or are accessible to residents. The P&A system shall have reasonable unaccompanied access to residents at all times necessary to conduct a full investigation of an incident of abuse or neglect. This authority shall include the opportunity to interview any facility service recipient, employee, or other persons, including the person thought to be the victim of such abuse, who might be reasonably believed by the system to have knowledge of the incident under investigation. Such access shall be afforded, upon request, by the P&A system when:

(1) An incident is reported or a complaint is made to the P&A system;

(2) The P&A system determines there is probable cause to believe that an incident has or may have occurred; or

(3) The P&A system determines that there is or may be imminent danger of serious abuse or neglect of an individual with mental illness.

(c) In addition to access as prescribed in paragraph (b) of this section, a P&A system shall have reasonable unaccompanied access to facilities including all area which are used by residents, are accessible to residents, and to programs and their residents at reasonable times, which at a minimum shall include normal working hours and visiting hours. Residents include adults or minors who have legal guardians or conservators. P&A activities shall be conducted so as to minimize interference with facility programs, respect residents' privacy interests, and honor a resident's request to terminate an interview. This access is for the purpose of:

(1) Providing information and training on, and referral to programs addressing the needs of individuals with mental illness, and information and training about individual rights and the protection and advocacy services available from the P&A system, including the name, address, and telephone number of the P&A system.

(2) Monitoring compliance with respect to the rights and safety of residents; and

(3) Inspecting, viewing and photographing all areas of the facility which are used by residents or are accessible to residents.

(d) Unaccompanied access to residents shall include the opportunity to meet and communicate privately with individuals regularly, both formally and informally, by telephone, mail and in person. Residents include minors or adults who have legal guardians or conservators.

(e) The right of access specified in paragraph (c) of this section shall apply despite the existence of any State or local laws or regulations which restrict informal access to minors and adults with legal guardians or conservators. The system shall make very effort to ensure that the parents of minors or guardians of individuals in the care of a facility are informed that the system will be monitoring activities at the facility and may in the course of such monitoring have access to the minor or adult with a legal guardian. The system shall take no formal action on behalf of individuals with legal guardians or conservators, or initiate a formal attorney/client or advocate/client relationship without appropriate consent, except in emergency situations as described in § 51.41(b)(3).

(f) A P&A system providing representation to individuals with mental illness in Federal facilities shall have all the rights and authority accorded other representatives of residents of such facilities pursuant to State and Federal laws.

§ 51.43 Denial of delay or access.

If a P&A system's access to facilities, programs, residents or records covered by the Act or this part is delayed or denied, the P&A system shall be provided promptly with a written statement of reasons, including, in the case of a denial for alleged lack of authorization, the name, address and telephone number of the legal guardian, conservator, or other legal representative of an individual with mental illness. Access to facilities, records or residents shall not be delayed or denied without the prompt provision of written statements of the reasons for the denial.

§ 51.44 [Reserved]

§ 51.45 Confidentiality of protection and advocacy system records.

(a) Records maintained by the P&A system are the property of the P&A system which must protect them from loss, damage, tampering or use by unauthorized individuals. The P&A system must:

(1) Except as provided elsewhere in this section, keep confidential all records and information, including information contained in any automated electronic database pertaining to:

(i) Clients to the same extent as is required under Federal or State laws for a provider of mental health services;

(ii) Individuals who have been provided general information or technical assistance on a particular matter;

(iii) Identity of individuals who report incidents of abuse or neglect or furnish information that forms the basis for a determination that probable cause exists; and

(iv) Names of individuals who are residents and provide information for the record.

(2) Have written policies governing access to, storage of, duplication and release of information from client records; and

(3) Obtain written consent from the client, if competent, or from his or her legal representative, from individuals who have been provided general information or technical assistance on a particular matter and from individuals who furnish reports or information that forms the basis for a determination of probable cause, before releasing information to individuals not otherwise authorized to receive it.

(b) Nothing in this subpart shall prevent the P&A system from. (1) Issuing a public report of the results of an investigation which maintains the confidentiality of the individuals listed in paragraph (a)(1) of this section or,

(2) Reporting the results of an investigation which maintains the confidentiality of individual service recipients to responsible investigative or enforcement agencies should an investigation reveal information concerning the facility, its staff, or employees warranting possible sanctions or corrective action. this information may be reported to agencies responsible for facility licensing or accreditation, employee discipline, employee licensing or certification, or criminal prosecution.

(c) For purposes of any periodic audit, report, or evaluation of the performance of the P&A system, the Secretary shall not require the P&A system to disclose the identity, or any other personally identifiable information, of any individual requesting assistance under a program. This requirement does not restrict access by the Department or other authorized Federal or State officials to client records or other records of the P&A system when deemed necessary for audit purposes and for monitoring P&A system compliance with applicable Federal or State laws and regulations. The purpose of obtaining such information is solely to determine that P&A systems are spending their grant funds awarded under the Act on serving individuals with mental illness. Officials that have access to such information must keep it confidential to the maximum extent permitted by law and regulations. If photostatic copies of materials are provided, then the destruction of such evidence is required once such reviews have been completed.

(d) Subject to the restrictions and procedures set out in this section, implementing section 106 (a) and (b) of the Act (42 U.S.C. 10806 (a) and (b)), this part does not limit access by a legal guardian, conservator, or other legal representative of an individual with mental illness, unless prohibited by State or Federal law, court order or the attorney-client privilege.

§51.46 Disclosing information obtained from a provider of mental health services.

(a) Except as provided in paragraph (b) of this section, if a P&A system has access to records pursuant to section 105(a)(4) of the Act (42 U.S.C. 10805(a)(4)) which, under Federal or State law, are required to be maintained in a confidential manner by a provider of mental health services, it may not disclose information from such records to the individual who is the subject of the information if the mental health professional responsible for supervising the provision of mental health services to that individual has given the P&A system a written determination that disclosure of such information to the individual would be detrimental to the individual's health. The provider shall be responsible for giving any such written determination to the P&A system at the same time as access to the records containing the information is granted.

(b)(1) If the disclosure of information has been denied under paragraph (a) of this section to an individual, the following individuals or the P&A system may select another mental health professional to review the information and to determine if disclosure of the information would be detrimental to the individual's health:

(i) Such individual;

(ii) The legal guardian, conservator or other legal representative of the individual; or

(iii) An eligible P&A system, acting on behalf of an individual:

(A) Whose legal guardian is the State; or

(B) Whose legal guardian, conservator, or other legal representative has not, within a reasonable time after the denial of access to information under paragraph (a), selected a mental health professional to review the information.

(2) If such mental health professional determines, based on professional judgment, that disclosure of the information would not be detrimental to the health of the individual, the P&A system may disclose such information to the individual.

(c) The restriction in paragraph (b) of this section does not affect the P&A system's access to the records.

PART 51a—PROJECT GRANTS FOR MATERNAL AND CHILD HEALTH

Sec.
51a.1 To which programs does this regulation apply?
51a.2 Definitions.
51a.3 Who is eligible to apply for Federal funding?
51a.4 How is application made for Federal funding?
51a.5 What criteria will DHHS use to decide which projects to fund?
51a.6 What confidentiality requirements must be met?
51a.7 What other DHHS regulations apply?
51a.8 What other conditions apply to these grants?

AUTHORITY: Sec. 1102 of the Social Security Act, 49 Stat. 647 (42 U.S.C. 1302); sec. 502(a), 502(b)(1)(A), and 506(a)(3) of the Social Security Act, 95 Stat. 819–20 (42 U.S.C. 702(a), 702(b)(1)(A) and 706(a)(3)).

SOURCE: 51 FR 7727, Mar. 5, 1986, unless otherwise noted.

§ 51a.1 To which programs does this regulation apply?

The regulation in this part applies to grants, contracts, and other arrangements under section 502(a) and 502(b)(1)(A) of the Social Security Act, as amended (42 U.S.C. 702(a) and 702(b)(1)(A)), the Maternal and Child Health (MCH) Federal Set-Aside project grant programs. Section 502(a) authorizes funding for special projects of regional and national significance (SPRANS), research and training projects with respect to maternal and child health and children with special health care needs (including early intervention training and services development); genetic disease testing, counseling and information programs; comprehensive hemophilia diagnostic and treatment centers; projects for screening and follow-up of newborns for sickle cell anemia and other genetic disorders; and special maternal and child health improvement projects. Section 502(b)(1)(A) authorizes funding for projects termed community integrated service system (CISS) projects for the development and expansion of: maternal and infant health home visiting; projects to increase the participation of obstetricians and pediatricians in title V and title XIX programs; integrated maternal and child health service systems; maternal and child health centers operating under the direction of not-for-profit hospitals; rural maternal and child health programs; and outpatient and community-based services programs for children with special health care needs.

[59 FR 36706, July 19, 1994]

§ 51a.2 Definitions.

Act means the Social Security Act, as amended.

Genetic diseases means inherited disorders caused by the transmission of certain aberrant genes from one generation to another.

Hemophilia means a genetically transmitted bleeding disorder resulting from a deficiency of a plasma clotting factor.

Institution of higher learning means any college or university accredited by a regionalized body or bodies approved for such purpose by the Secretary of Education, and any teaching hospital which has higher learning among its purposes and functions and which has a formal affiliation with an accredited school of medicine and a full-time academic medical staff holding faculty status in such school of medicine.

Secretary means the Secretary of Health and Human Services or his or her designee.

§51a.3 Who is eligible to apply for Federal funding?

(a) With the exception of training and research, as described in paragraph (b) of this section, any public or private entity, including an Indian tribe or tribal organization (as those terms are defined at 25 U.S.C. 450b) is eligible to apply for federal funding under this Part.

(b) Only public or nonprofit private institutions of higher learning may apply for training grants. Only public or nonprofit institutions of higher learning and public or private nonprofit agencies engaged in research or in programs relating to maternal and child health and/or services for children with special health care needs may apply for grants contracts or cooperative agreements for research in maternal and child health services or in services for children with special health care needs.

[59 FR 36706, July 19, 1994]

§51a.4 How is application made for Federal funding?

An application for funding under the MCH Federal Set-Aside project grant programs must be submitted to the Secretary at such time and in such manner as the Secretary may prescribe. It must include a budget and narrative plan of the manner in which the project will meet each of the requirements prescribed by the Secretary. The plan must describe the project in sufficient detail to identify clearly the nature, need, and specific objectives of, and methodology for carrying out, the project.

(Approved by the Office of Management and Budget under control number 0915–0050)

[59 FR 36706, July 19, 1994]

§51a.5 What criteria will DHHS use to decide which projects to fund?

(a) The Secretary will determine the allocation of funds available under sections 502(a) and 502(b)(1)(A) of the Act for each of the activities described in §51a.1.

(b) Within the limit of funds determined by the Secretary to be available for each of the activities described in §51a.1, the Secretary may award Federal funding for projects under this part to applicants which will, in his or her judgment, best promote the purpose of title V of the Social Security Act and address achievement of Healthy Children 2000 objectives,[1] taking, the following factors into account:

(1) The extent to which the project will contribute to the advancement of maternal and child health and/or improvement of the health of children with special health care needs;

(2) The extent to which the project is responsive to policy concerns applicable to MCH grants and to program objectives, requirements, priorities and/or review criteria for specific project categories, as published in program announcements or guidance materials.

(3) The extent to which the estimated cost to the Government of the project is reasonable, considering the anticipated results;

(4) The extent to which the project personnel are well qualified by training and/or experience for their roles in the project and the applicant organization has adequate facilities and personnel; and

(5) The extent to which, insofar as practicable, the proposed activities, if well executed, are capable of attaining project objectives.

(c) For the following types of CISS projects, preference for funding will be given to qualified applicants in areas with a high infant mortality rate (relative to the latest average infant mortality rate in the United States or in the State in which the area is located):

(1) Projects for the development and expansion of maternal and infant health home visiting;

[1] Healthy Children 2000: National Health Promotion and Disease Prevention Objectives Related to Mothers, Infants, Children, Adolescents, and Youth is a special compendium of health status goals and national health objectives affecting mothers, infants, children, adolescents, and youth originally published in Healthy People 2000 in September 1990. Potential applicants may obtain a copy of Healthy People 2000 (Full Report: Stock No. 017–001–00474–0 or Healthy People 2000 (Summary Report; Stock No. 017–001–00473–1) through the Superintendent of Documents, Government Printing Office Washington, DC 20402–9325, (telephone: 202 512–1800).

(2) Projects to increase the participation of obstetricians and pediatricians in title V and title XIX programs;

(3) Integrated maternal and child health service systems;

(4) Maternal and child health centers operating under the direction of not-for-profit hospitals;

(5) Rural maternal and child health programs; and

(6) Outpatient and community based services for children with special health care needs.

[59 FR 36706, July 19, 1994]

§ 51a.6 What confidentiality requirements must be met?

All information as to personal facts and circumstances obtained by the project's staff about recipients of services shall be held confidential, and shall not be disclosed without the individual's consent except as may be otherwise required by applicable law or as may be necessary to provide for medical audits by the Secretary with appropriate safeguards for confidentiality of patient records. Otherwise, information may be disclosed only in summary, statistical, or other form which does not identify particular individuals.

§ 51a.7 What other DHHS regulations apply?

(a) Several other DHHS regulations apply to awards under this part. These include, but are not limited to:

42 CFR part 50—Policies of general applicability:

subpart B—Sterilization of persons in federally assisted family planning projects.

subpart C—Abortions and related medical services in federally assisted programs of the Public Health Service.

subpart E—Maximum allowable cost for drugs.

45 CFR part 76—Governmentwide debarment and suspension (nonprocurement) and governmentwide requirements for drug-free workplace (grants).

45 CFR part 80—Nondiscrimination under programs receiving Federal assistance through the Department of Health and Human Service—Effectuation of title VI of the Civil Rights Act of 1964.

45 CFR part 81—Practice and procedure for hearings under Part 80 of this title.

45 CFR part 84—Nondiscrimination on the basis of handicap in programs and activities receiving or benefiting from Federal financial assistance.

45 CFR part 86—Nondiscrimination on the basis of sex in education programs and activities receiving or benefiting from Federal financial assistance.

45 CFR part 91—Nondiscrimination on the basis of age in HHS programs or activities receiving Federal financial assistance.

45 CFR part 93—New restrictions on lobbying.

(b) In addition to the above regulations, the following apply to projects funded through grants:

42 CFR part 50—Policies of general applicability:

subpart D—Public Health Service grant appeals procedure.

45 CFR part 16—Procedures of the Departmental Grant Appeals Board.

45 CFR part 74—Administration of grants to nonprofit organizations.

45 CFR part 75—Informal grant appeals procedures.

45 CFR part 92—Administration of grants to State and local governments.

[59 FR 36707, July 19, 1994]

§ 51a.8 What other conditions apply to these grants?

(a) Recipients of project grants will be required to submit such additional information to the Secretary on an annual basis as the Secretary determines, including:

(1) the number of individuals served or trained, as appropriate under the project;

(2) a copy of any evaluation conducted by the recipient; and

(3) a list of Healthy Children 2000 objectives addressed by the project and data on how the project contributed toward meeting the objectives.

(b) The Secretary may at the time of award of project grants under this Part impose additional conditions, including conditions governing the use of information or consent forms, when, in the Secretary's judgment, they are necessary to advance the approved program, the interest of public health, or the conservation of grant funds.

[59 FR 36707, July 19, 1994]

PART 51b—PROJECT GRANTS FOR PREVENTIVE HEALTH SERVICES

Subpart A—General Provisions

Sec.
51b.101 To which programs do these regulations apply?
51b.102 Definitions.
51b.103 What are the general application requirements?
51b.104 Can personnel, supplies, and related items be provided in lieu of cash?
51b.105 Which other HHS regulations apply to these grants?
51b.106 What other conditions apply to these grants?
51b.107 Is participation in preventive health service programs required by these regulations?

Subpart B—Grants for Childhood Immunization Programs

51b.201 To which programs does this subpart apply?
51b.202 Definitions.
51b.203 Who is eligible for a grant under this subpart?
51b.204 What information is required in the application?
51b.205 How will grant applications be evaluated and the grants awarded?
51b.206 How can grant funds be used?

Subpart C [Reserved]

Subpart D—Grants for Venereal Disease Control Programs

51b.401 To which programs does this subpart apply?
51b.402 Definitions.
51b.403 Who is eligible for a grant under this subpart?
51b.404 What are the confidentiality requirements?
51b.405 What information is required in the application?
51b.406 How will grant applications be evaluated and the grants awarded?
51b.407 How can grant funds be used?

Subpart E [Reserved]

Subpart F—Grants for Research, Demonstrations, and Public Information and Education for the Prevention and Control of Venereal Disease

51b.601 To which programs does this subpart apply?
51b.602 Who is eligible for a grant under this subpart?
51b.603 What are the confidentiality requirements?
51b.604 What information is required in the application?
51b.605 How will grant applications be evaluated and the grants awarded?
51b.606 How can grant funds be used?

AUTHORITY: Secs. 317 and 318, Public Health Service Act, 92 Stat. 3574 and 3582 (42 U.S.C. 247b, 247c); sec. 1743 Pub. L. 97–35, 95 Stat. 763 (31 U.S.C. 1243 note).

Subpart A—General Provisions

SOURCE: 48 FR 4473, Feb. 1, 1983, unless otherwise noted.

§51b.101 To which programs do these regulations apply?

The regulations in this part apply to grants for preventive health service programs authorized under section 317 (42 U.S.C. 247b) and for venereal disease prevention and control programs authorized under section 318 (42 U.S.C. 247c) of the Act.

§51b.102 Definitions.

As used in these regulations:

Act means the Public Health Service Act, as amended.

Secretary means the Secretary of Health and Human Services (HHS) or any other officer or employee of that Department to whom the authority involved has been delegated.

State means one of the 50 States, the District of Columbia, Guam, the Commonwealth of Puerto Rico, the Northern Mariana Islands, the Virgin Islands, American Samoa, and the Trust Territory of the Pacific Islands.

§51b.103 What are the general application requirements?

(a) The project application shall contain a full description of the program objectives, plans, and activities. With respect to programs authorized by section 317 of the Act only, the application shall also provide, as the Secretary may require:

(1) The amount of Federal, State, and other funds obligated by the applicant in its latest annual accounting period for the provision of such program.

(2) A description of the services provided by the applicant for this accounting period covered under paragraph (a)(1) of this section.

(3) The amount of Federal funds needed by the applicant to continue providing these services.

(4) A description of any proposed changes in the provision of the services, reasons and priorities, and the amount of Federal funds needed by the applicant to make the changes.

(b) The application shall contain evidence satisfactory to the Secretary that it has been submitted, as appropriate, for action to the planning agency designated by the Secretary under title XV of the Act (42 CFR parts 122 and 123). These grants are subject to the intergovernmental review of Federal programs of Executive Order 12372.

(c) The application shall contain assurances that no one will be denied services because of inability to pay, and that the services are provided in a manner which preserves human dignity and maximizes acceptance.

§ 51b.104 Can personnel, supplies, and related items be provided in lieu of cash?

The Secretary may reduce a grant by the amount of the fair market value of any supplies (including vaccines and other preventive agents) or equipment furnished a grant recipient when furnished at the request of the recipient. The Secretary also may reduce a grant by the amount of the pay, allowances, travel expenses, and any other costs in connection with the detail of any officer or employee of the Government to the recipient when the detail is at the request of the recipient. The amount the grant is reduced shall be available for payment by the Secretary of the costs incurred in furnishing the supplies or equipment or in detailing personnel and shall be deemed to have been paid to the recipient.

§ 51b.105 Which other HHS regulations apply to these grants?

Several other HHS regulations apply to grants under this part. These include, but are not limited to:

42 CFR part 50, subpart D—Public Health Service grant appeals procedure
45 CFR part 16—Procedures of the Departmental Grant Appeals Board
45 CFR part 46—Protection of human subjects
45 CFR part 74—Administration of grants
45 CFR part 75—Informal grant appeals procedures
45 CFR part 76—Debarment and suspension from eligibility for financial assistance
45 CFR part 80—Nondiscrimination under programs receiving Federal assistance through the Department of Health and Human Services effectuation of title VI of the Civil Rights Act of 1964
45 CFR part 81—Practice and procedure for hearings under part 80 of this title
45 CFR part 84—Nondiscrimination on the basis of handicap in programs and activities receiving or benefiting from Federal financial assistance
45 CFR part 86—Nondiscrimination on the basis of sex in education programs and activities receiving or benefiting from Federal financial assistance
45 CFR part 91—Nondiscrimination on the basis of age in HHS programs or activities receiving Federal financial assistance

[49 FR 38109, Sept. 27, 1984]

§ 51b.106 What other conditions apply to these grants?

(a) The notice of grant award specifies how long HHS intends to support the project without requiring the project to recompete for funds. This period, called the project period, will usually be for 2 to 5 years.

(b) For budgetary and funding purposes, the project period is generally divided into 12-month intervals called budget periods. A grantee must submit a separate application to have the support continued for each subsequent budget period after the initial award. Decisions regarding continuation awards and the funding level of such awards will be made after consideration of such factors as the grantee's progress and management practices and the availability of funds. In all cases, continuation awards require a determination by HHS that continued funding is in the best interest of the government.

(c) Neither the approval of any application nor the award of any grant commits or obligates the United States in any way to make any additional, supplemental, continuation, or other award with respect to any approved application or portion of an approved application.

(d) Any funds granted pursuant to this subpart shall be expended solely for the purposes for which the funds were granted in accordance with the

approved application and budget, the regulations of this part, the terms and conditions of the award, and the applicable cost principles prescribed in subpart Q of 45 CFR part 74.

(e) The Secretary may, at the time of award, impose additional conditions, including conditions governing the use of information or consent forms, when, in the Secretary's judgment, they are necessary to advance the approved program, the interest of the public health, or the conservation of grant funds.

§51b.107 Is participation in preventive health service programs required by these regulations?

Nothing in these regulations shall be construed to require any State or political subdivision to have a preventive health service program which would require any person who objects to treatment to be treated under the program.

Subpart B—Grants for Childhood Immunization Programs

SOURCE: 44 FR 40501, July 11, 1979, unless otherwise noted.

§51b.201 To which programs does this subpart apply?

The regulations in this subpart apply to the award of grants under section 317 of the Act for programs to immunize children against vaccine preventable diseases.

§51b.202 Definitions.

As used in this subpart:

Childhood immunization program means a preventive health service program to immunize children against vaccine preventable diseases including poliomyelitis, measles, mumps, rubella, diphtheria, pertussis, and tetanus.

§51b.203 Who is eligible for a grant under this subpart?

An applicant must be a State agency or an agency of a political subdivision of a State which has legal responsibility for disease control under the laws of a State.

§51b.204 What information is required in the application?

(a) The initial application must cover the project period, and must include a description of the following:

(1) The need for grant support.

(2) The immediate (1 year budget period) and long-range (2–5 year project period) objectives of the project in specific and measurable terms.

(3) Current immunization programs and the additional or intensified activities to be carried out to meet the objectives and priorities.

(4) The following program elements should be included and described:

(i) A plan to assure that children begin and complete their immunizations on schedule, including the use of a standard immunization record card, a provider-based tickler system (public and private) for the recall of children, and a hospital-based immunization education program for new mothers.

(ii) Assessment of immunization status of school enterers, children attending licensed day-care centers, and children under 2 years of age and new enrollees under age 5 served in public clinics.

(iii) A plan for surveillance of vaccine-preventable diseases that includes morbidity and mortality reporting as well as field and laboratory investigations.

(iv) Procedures for prompt review of the data collected from the morbidity surveillance system to allow for immediate response to all occurrence of suspected diphtheria and polio cases upon notification and response to suspected measles cases within 48 hours.

(v) A system for monitoring vaccine-associated reactions including a mechanism for responding to persons with vaccine-related complaints.

(vi) A plan to systematically immunize susceptible children at school entry through vigorous enforcement of school immunization laws.

(5) The manner in which the applicant intends to evaluate the project.

(b) An application for a continuation grant must be submitted for each funding period. This continuation application must include the following:

(1) A budget and justification for the grant funds requested.

(2) A summary of the progress achieved during the previous budget period.

(3) A description of any changes in the information shown in the project application.

[48 FR 4474, Feb. 1, 1983]

§ 51b.205 How will grant applications be evaluated and the grants awarded?

(a) Within the limits of funds available, the Secretary may award a grant to assist in meeting part of the cost of a childhood immunization program. Grants will be awarded to those applicants whose projects he determines will best promote the purposes of section 317 of the Act. Before awarding a grant to a local public entity of a State, the Secretary will consult with the State health authority.

(b) Priorities for funding will be based on the following factors:

(1) The relative extent of the problems which are caused by one or more of the vaccine preventable diseases in the area served by the applicant.

(2) The extent to which the proposed program is designed to eliminate or reduce the problems.

(3) The extent to which the proposed program will increase the immunization rates in population groups identified as having the lowest immunity levels.

(4) The extent to which the grantee will cooperate with and use public and nonprofit private entities and volunteers.

(5) The extent to which a strong commitment to the objectives of the program is reflected in the commitment of grantee resources to the program.

[44 FR 40501, July 11, 1979, as amended at 48 FR 4475, Feb. 1, 1983]

§ 51b.206 How can grant funds be used?

Grant funds awarded under this subpart may be used to purchase supplies, materials, and equipment for childhood immunization programs. Grant funds also may be used to pay for salaries or wages and related expenses for personnel directly involved in the planning, organization, promotion, epidemiology, surveillance, and other program activities.

Subpart C [Reserved]

Subpart D—Grants for Venereal Disease Control Programs

SOURCE: 48 FR 4475, Feb. 1, 1983, unless otherwise noted.

§ 51b.401 To which programs does this subpart apply?

The regulations in this subpart apply to the award of project grants under section 318(c) of the Act for venereal disease prevention and control programs, and under section 318(b) of the Act with respect to public information and education activities which are integral to a balanced, comprehensive venereal disease control program.

§ 51b.402 Definitions.

As used in this subpart:

Venereal disease means gonorrhea, syphilis, or any other disease which can be sexually transmitted and which the Secretary determines is or may be amenable to control with assistance provided under this authority and which is of national significance.

Venereal disease control program means a program designed to carry out activities or to provide services to systematically detect and prevent venereal disease as distinguished from those activities or services which are designed to diagnose or treat venereal disease patients or suspects.

§ 51b.403 Who is eligible for a grant under this subpart?

An applicant must be a State agency or a political subdivision of a State which has legal responsibility for disease control under the laws of the State.

§ 51b.404 What are the confidentiality requirements?

All information obtained by program personnel in connection with the examination, care, and treatment of an individual in this program shall be held confidential. It shall not be disclosed without the individual's consent except as may be required by the law of a

State or political subdivision of a State or as may be necessary to provide services to the individual. Information may be disclosed in summary, statistical, or other form, or for clinical or research purposes, but only if the disclosure does not identify particular individuals.

§51b.405 What information is required in the application?

(a) The initial application must include a description of the following:

(1) The nature and extent of the venereal disease problem in the area.

(2) The need for project grant support.

(3) The immediate (1-year budget period) and long-range (2–5 year project period) objectives of the project in specific and measurable terms.

(4) The activities to be carried out to meet the objectives. The following program elements must be included and described:

(i) Venereal disease surveillance.

(ii) Casefinding and case followup.

(iii) Interstate epidemiologic referral and followup.

(iv) Public venereal disease information and education.

(v) Professional (including appropriate allied health personnel) venereal disease education, training, and clinical skills improvement activities, including efforts to assure high quality clinical services in public venereal disease clinics.

(5) At the option of the applicant, special studies or demonstrations to evaluate or test venereal disease prevention and control strategies and activities.

(6) The manner in which the applicant intends to conduct and evaluate the project, including a system for analysis of morbidity data so that control activities can be efficiently evaluated and targeted.

(7) The diagnostic and treatment services that will be provided.

(8) A budget and justification for the grant funds requested. Since public information and education activities are authorized separately from other control program activities, funds requested for this purpose must be itemized and justified separately in the narrative part of the application.

(b) An application for a continuation grant must be submitted for each funding period. This continuation application must include the following:

(1) A budget and justification for the grant funds requested.

(2) A summary of the progress achieved during the previous budget period.

(3) A description of any changes in the information shown in the project application.

§51b.406 How will grant applications be evaluated and the grants awarded?

(a) Within the limits of funds available, the Secretary may award a grant to assist in meeting the cost of a venereal disease control program. Before awarding a grant to a political subdivision of a State, the Secretary will consult with the State health authority.

(b) Priorities for funding will be based on the following factors:

(1) The relative extent of the venereal disease problem in the area served by the applicant.

(2) The design of the venereal disease prevention and control program.

(3) The general quality of the applicant's plan of operation and objectives in accordance with the requirements in these regulations. Emphasis will be placed on determining the extent to which services are coordinated among health care providers in the area served and integrated into a cohesive plan for delivery of service to groups having the highest incidence of venereal disease.

(4) The capacity of the applicant to make effective use of Federal funds.

(5) The commitment of the applicant to the control of venereal disease as reflected in the commitment of applicant resources to the program.

§51b.407 How can grant funds be used?

Grant funds awarded under this subpart may be used only for programs approved under section 318(c), and with respect to public information and education, those programs approved under section 318(b) of the Act. Unless specifically approved, grant funds shall not be used for performing diagnostic tests (other than gonorrhea screening tests),

maintaining central registries, purchasing data processing equipment, or providing diagnostic and treatment facilities and services. The applicant must provide assurances, however, that these services will be available as needed as an adjunct to control program activities supported with grant funds. To obtain special approval for grant support of such activities, the grantee shall justify the exception to the satisfaction of the Secretary that funds for this purpose are necessary for the proper conduct of the program and are otherwise unavailable. Support of these services will generally be approved only in the following situations:

(a) Special studies or demonstrations, (b) the support of developmental or start-up activity, or (c) the support of an essential service which will result in a savings to a detection or prevention activity supported by the grant. Unless otherwise approved, exceptions based on paragraphs (b) and (c) of this section are only allowed during one funding period. The grantee is expected to support these activities in subsequent funding periods.

Subpart E [Reserved]

Subpart F—Grants for Research, Demonstrations, and Public Information and Education for the Prevention and Control of Venereal Disease

SOURCE: 48 FR 4476, Feb. 1, 1983, unless otherwise noted.

§ 51b.601 To which programs does this subpart apply?

The regulations in this subpart apply to the award of venereal disease control project grants for research, demonstrations, public information, and education activities which can be applied to achieve improvements in venereal disease prevention and control under section 318(b) of the Act.

§ 51b.602 Who is eligible for a grant under this subpart?

An applicant must be a State, political subdivision of any State, or any other public or nonprofit private entity.

§ 51b.603 What are the confidentiality requirements?

All information obtained by program personnel in connection with the examination, care, and treatment of an individual in this program shall be held confidential. It shall not be disclosed without the individual's consent except as may be required by the law of a State, or political subdivision of a State, or as may be necessary to provide services to the individual. Information may be disclosed in summary, statistical, or other form, or for clinical or research purposes, but only if the disclosure does not identify particular individuals.

§ 51b.604 What information is required in the application?

(a) The initial application must include a description of the following:

(1) The setting and circumstances for which project grant support is being requested, including:

(i) The immediate and long-range objectives of the project in specific and measurable terms.

(ii) The activities which will be undertaken to accomplish the objectives, including the timing of these activities.

(iii) The anticipated application of findings to the national venereal disease control effort.

(iv) Any other information which will support the request for grant assistance.

(2) The relationship between the planned activities and the project objectives. The application must describe in detail how the applicant intends to proceed, particularly if the project is unusually complex and several activities are interdependent or unprecedented.

(3) A comprehensive and realistic plan which the applicant will use to evaluate the project. The plan must include periodic assessment of any possible impact, both positive and negative, that the proposed project might have upon the established venereal disease control program in the locality or localities in which the project will be undertaken.

(b) An application for a continuation grant must be submitted for each funding period. This continuation application must include the following:

(1) A budget and justification for the grant funds requested.

(2) A summary of the progress achieved during the previous budget period.

(3) A description of any changes in the information shown in the project application.

§ 51b.605 How will grant applications be evaluated and the grants awarded?

(a) Within the limits of funds available, the Secretary may award a grant to assist in meeting the costs of special activities authorized under section 318(b) of the Act.

(b) Grant applications will be reviewed and evaluated according to the following criteria:

(1) Is there adequate evidence that the proposed project is needed and that the outcome has potential to directly benefit the national venereal disease control effort?

(2) Are the project objectives specific, measurable, realistic, time phased, and related to promoting the purposes of section 318?

(3) Is the method of operation logical and clearly related to project objectives, and does it describe how the applicant intends to proceed particularly with activities which are complex, interrelated, or unprecedented?

(4) Does the method of operation include an assessment of any possible impact, both positive and negative, that the conduct of the proposed initiative might have upon the established venereal disease control program in the locality or localities in which the project will be undertaken?

(5) Does the proposal include a comprehensive and realistic plan for the evaluation of the project, and specify the measures and instruments of measurement to be used?

(6) Is the budget request reasonable and consistent with the intended use of grant funds?

(7) If the applicant intends only to evaluate an existing disease prevention and control approach, are the objectives substantially different from those which could be met by routine program evaluation?

§ 51b.606 How can grant funds be used?

(a) Grant funds may be used for the costs associated with planning, organizing, and conducting applied research, demonstrations, and public information and education programs.

(b) Grant funds may also be used to reimburse individuals who agree to be participants in the applied research projects. This reimbursement, however, must be justified as necessary and reasonable. A schedule of reimbursements must be submitted with the application and approved as part of the program plan.

(c) Grant funds may not be used to supplant funds supporting existing venereal disease control services provided by a State or locality.

PART 51c—GRANTS FOR COMMUNITY HEALTH SERVICES

Subpart A—General Provisions

Sec.
51c.101 Applicability.
51c.102 Definitions.
51c.103 Eligibility.
51c.104 Application.
51c.105 Accord with health planning.
51c.106 Amount of grant.
51c.107 Use of project funds.
51c.108 Grant payments.
51c.109 Nondiscrimination.
51c.110 Confidentiality.
51c.111 Publications and copyright.
51c.112 Grantee accountability.
51c.113 Applicability of 45 CFR part 74.

Subpart B—Grants for Planning and Developing Community Health Centers

51c.201 Applicability.
51c.202 Application.
51c.203 Project elements.
51c.204 Grant evaluation and award.

Subpart C—Grants for Operating Community Health Centers

51c.301 Applicability.
51c.302 Application.
51c.303 Project elements.
51c.304 Governing board.
51c.305 Grant evaluation and award.

Subpart D—Grants for Operating Community Health Projects

51c.401 Applicability.
51c.402 Application.
51c.403 Project elements.
51c.404 Grant evaluation and award.

Subpart E—Acquisition and Modernization of Existing Buildings

51c.501 Applicability.
51c.502 Definitions.
51c.503 Application.
51c.504 Project elements.
51c.505 Determination of cost.
51c.506 Use of grant funds.
51c.507 Facility which has previously received Federal grant.

AUTHORITY: Sec. 330, Public Health Service Act, 89 Stat. 342, (42 U.S.C. 254c); sec. 215, Public Health Service Act, 58 Stat. 690, (42 U.S.C. 216).

SOURCE: 41 FR 53205, Dec. 3, 1976, unless otherwise noted.

Subpart A—General Provisions

§ 51c.101 Applicability.

The regulations of this subpart are applicable to all project grants authorized by section 330 of the Public Health Service Act (42 U.S.C. 254c).

§ 51c.102 Definitions.

As used in this part:

(a) *Act* means the Public Health Service Act.

(b) *Catchment area* means the area served by a project funded under section 330 of the Act.

(c)(1) *Community health center* or *center* means an entity which, through its staff and supporting resources or through contracts or cooperative arrangements with other public or private entities, provides for all residents of its catchment area:

(i) Primary health services;

(ii) As determined by the Secretary to be appropriate for particular centers, supplemental health services necessary for the adequate support of primary health services;

(iii) Referral to providers of supplemental health services and payment, as determined by the Secretary to be appropriate and feasible, for their provision of such services;

(iv) Environmental health services, as determined by the Secretary to be appropriate for particular centers; and

(v) Information on the availability and proper use of health services.

(2) For purposes of paragraph (c)(1) of this section, the provision of a given service by a center will be determined by the Secretary to be appropriate where:

(i) There is a need, as determined by the Secretary, for the provision of such service in the catchment area; and

(ii) The provision of such service by the center is feasible, taking into consideration the center's projected revenues, other resources, and grant support under this part.

(d) *Environmental health services* means the detection and alleviation of unhealthful conditions of the environment of the catchment area, such as problems associated with water supply, sewage treatment, solid waste disposal, rodent and parasite infestation, and housing conditions. For the purposes of this part, the detection and alleviation of unhealthful conditions of the environment includes the notification of and making of arrangements with appropriate Federal, State, or local authorities responsible for correcting such conditions.

(e) *Medically underserved population* means the population of an urban or rural area designated by the Secretary as an area with a shortage of personal health services or a population group designated by the Secretary as having a shortage of such services. Medically underserved areas will be designated by the Secretary and a list of those designated will be published in the FEDERAL REGISTER from time to time, taking into consideration the following factors, among others:

(1) Available health resources in relation to size of the area and its population, including appropriate ratios of primary care physicians in general or family practice, internal medicine, pediatrics, or obstetrics and gynecology to population;

(2) Health indices for the population of the area, such as infant mortality rate;

(3) Economic factors affecting the population's access to health services, such as percentage of the population

with incomes below the poverty level; and

(4) Demographic factors affecting the population's need and demand for health services, such as percentage of the population age 65 and over.

(f) *Nonprofit,* as applied to any private agency, institution, or organization, means one which is a corporation or association, or is owned and operated by one or more corporations or associations, no part of the net earnings of which inures, or may lawfully inure, to the benefit of any private shareholder or individual.

(g) *Physician* means a licensed doctor of medicine or doctor of osteopathy.

(h) *Primary health services* means:

(1) Diagnostic, treatment, consultative, referral, and other services rendered by physicians, and, where feasible, by physician's extenders, such as physicians' assistants, nurse clinicians, and nurse practitioners;

(2) Diagnostic laboratory services and diagnostic radiologic services;

(3) Preventive health services, including medical social services, nutritional assessment and referral, preventive health education, children's eye and ear examinations, prenatal and post-partum care, prenatal services, well child care (including periodic screening), immunizations, and voluntary family planning services;

(4) Emergency medical services, including provision, through clearly defined arrangements, for access of users of the center to health care for medical emergencies during and after the center's regularly scheduled hours;

(5) Transportation services as needed for adequate patient care, sufficient so that residents of the catchment area served by the center with special difficulties of access to services provided by the center receive such services; and

(6) Preventive dental services provided by a licensed dentist or other qualified personnel, including (i) oral hygiene instruction; (ii) oral prophylaxis, as necessary; and (iii) topical application of fluorides, and the prescription of fluorides for systemic use when not available in the community water supply.

(i) *Secretary* means the Secretary of Health and Human Services and any other officer or employee of the Department of Health and Human Services to whom the authority involved has been delegated.

(j) *Supplemental health services* means health services which are not included as primary health services and which are:

(1) Inpatient and outpatient hospital services;

(2) Home health services;

(3) Extended care facility services;

(4) Rehabilitative services (including physical and occupational therapy) and long-term physical medicine;

(5) Mental health services, including services of psychiatrists, psychologists, and other appropriate mental health professionals;

(6) Dental services other than those provided as primary health services;

(7) Vision services, including routine eye and vision examinations and provision of eyeglasses, as appropriate and feasible;

(8) Allied health services;

(9) Pharmaceutical services, including the provision of prescription drugs;

(10) Therapeutic radiologic services;

(11) Public health services (including nutrition education and social services);

(12) Ambulatory surgical services;

(13) Health education services; and

(14) Services, including the services of outreach workers, which promote and facilitate optimal use of primary health services and services referred to in the preceding subparagraphs of this paragraph and, if a substantial number of individuals in the population served by the center are of limited English-speaking ability, the services of outreach workers and other personnel fluent in the language or languages spoken by such individuals.

§51c.103 Eligibility.

Any public or nonprofit private entity is eligible to apply for a grant under this part.

§51c.104 Application.

(a) An application for a grant under this part shall be submitted to the Secretary at such time and in such form and manner as the Secretary may prescribe.

(b) The application shall contain a budget and narrative plan of the manner in which the applicant intends to conduct the project and carry out the requirements of this part. The application must describe how and the extent to which the project has met, or plans to meet, each of the requirements in subpart B (relating to grants for planning and developing community health centers), subpart C (relating to grants for the operation of community health centers), or subpart D (relating to grants for the operation of community health projects), as applicable. In addition, applications must include:

(1) A statement of specific, measurable objectives and the methods to be used to assess the achievement of the objectives in specified time periods and at least on an annual basis.

(2) The precise boundaries of the catchment area to be served by the applicant, including an identification of the medically underserved population or populations within the catchment area. In addition, the application shall include information sufficient to enable the Secretary to determine that the applicant's catchment area meets the following criteria:

(i) The size of such area is such that the services to be provided by the applicant are available and accessible to the residents of the area promptly and as appropriate;

(ii) The boundaries of such area conform, to the extent practicable, to relevant boundaries of political subdivisions, school districts, and areas served by Federal and State health and social service programs; and

(iii) The boundaries of such area eliminate, to the extent possible, barriers resulting from the area's physical characteristics, its residential patterns, its economic and social groupings, and available transportation.

(3) The results of an assessment of the need that the population served or proposed to be served has for the services to be provided by the project (or in the case of applications for planning and development projects, the methods to be used in assessing such need), utilizing, but not limited to, the factors set forth in § 51c.102(e)(1)–(4).

(4) Position descriptions for key personnel who will be utilized in carrying out the activities of the project and a statement indicating the need for the positions to be supported with grant funds to accomplish the objectives of the project.

(5) Letters and other forms of evidence showing that efforts have been made to secure financial and professional assistance and support for the project within the proposed catchment area and the continuing involvement of the community in the development and operation of the project.

(6) An assurance that an independent certified public accountant, or a public accountant licensed before December 31, 1970, will be engaged to certify that the system for the management and control of its financial assets will be in accord with sound financial management practices, including applicable Federal requirements.

(7) A list of all services proposed to be provided by the project.

(8) A list of services which are to be provided directly by the project through its own staff and resources and a description of any contractual or other arrangements (including copies of documents, where available) entered into, or planned for the provision of services.

(9) The schedule of fees and/or payments and schedule of discounts for services provided by the project.

(10) Evidence that all applicable requirements for review and/or approval of the application under title XV of the Act have been met.

(11) An assurance that the project will be conducted in accordance with the applicable requirements of this part.

(c) The application must be executed by an individual authorized to act for the applicant and to assume on behalf of the applicant the obligations imposed by the statute, the applicable regulations of this part, and any additional conditions of the grant.

(Sec. 330, Public Health Service Act, 89 Stat. 342, (42 U.S.C. 254c); sec. 215, Public Health Service Act, 58 Stat. 690, 67 Stat. 63 (42 U.S.C. 216))

[41 FR 53205, Dec. 3, 1976, as amended at 48 FR 29201, June 24, 1983; 48 FR 45558, Oct. 6, 1983]

§51c.105 Accord with health planning.

A grant may be made under this part only if the applicable requirements of title XV of the Act relating to review and approval by the appropriate health planning agencies have been met.

§51c.106 Amount of grant.

(a) The amount of any award under this part will be determined by the Secretary on the basis of his estimate of the sum necessary for a designated portion of direct project costs plus an additional amount for indirect costs, if any, which will be calculated by the Secretary either:

(1) On the basis of the estimate of the actual indirect costs reasonably related to the project; or

(2) On the basis of a percentage of all, or a portion of, the estimated direct costs of the project when there are reasonable assurances that the use of such percentage will not exceed the approximate actual indirect costs. Such award may include an estimated provisional amount for indirect costs or for designated direct costs (such as fringe benefit rates) subject to upward (within the limits of available funds) as well as downward adjustments to actual costs when the amount properly expended by the grantee for provisional items has been determined by the Secretary: *Provided, however,* That no grant shall be made for an amount in excess of the total cost found necessary by the Secretary to carry out the project.

(i) In determining the percentage of project costs to be borne by the grantee, factors which the Secretary will take into consideration will include the following:

(A) The ability of the grantee to finance its share of project costs from non-Federal sources;

(B) The need in the area served by the project for the services to be provided; and

(C) The extent to which the project will provide services in an innovative manner which the Secretary desires to stimulate in the interest of developing more effective health service delivery systems on a regional or national basis.

(ii) At any time after approval of an application under this part, the Secretary may retroactively agree to a percentage of project costs to be borne by the grantee lower than that determined pursuant to paragraph (a)(2)(i) of this section where he finds that changed circumstances justify a smaller contribution.

(iii) In determining the grantee's share of project costs, costs borne by Federal grant funds, or costs used to match other Federal grants, may not be included except as otherwise provided by law or regulations.

(b) All grant awards shall be in writing, and shall set forth the amount of funds granted and the period for which support is recommended.

(c) Neither the approval of any project nor any grant award shall commit or obligate the United States in any way to make any additional, supplemental, continuation, or other award with respect to any approved project or portion thereof. For continuation support, grantees must make separate application.

§51c.107 Use of project funds.

(a) Any funds granted pursuant to this part, as well as other funds to be used in performance of the approved project, may be expended solely for carrying out the approved project in accordance with section 330 of the Act, the applicable regulations of this part, the terms and conditions of the award, and the applicable cost principles prescribed in subpart Q of 45 CFR part 74.

(b) Project funds awarded under this part may be used for, but need not be limited to, the following:

(1) The costs of acquiring and modernizing existing buildings (including the costs of amortizing the principal of, and paying interest on, loans), but only in accordance with subpart E of this part and as approved in the grant award;

(2) The costs of obtaining technical assistance to develop and improve the management capability of the project, but only as approved by the Secretary;

(3) The reimbursement of members of the grantee's governing board, if any, for reasonable expenses actually incurred by reason of their participation in board activities;

(4) The reimbursement of governing board members for wages lost by reason of participation in the activities of such board if the member is from a family with an annual family income below $10,000 or if the member is a single person with an annual income below $7,000;

(5) The cost of delivering health services, including services rendered on a prepaid capitation basis, to residents of the project's catchment area within the following limitations: grant funds may be used to pay the full cost of project services to individuals and families with annual incomes at or below those set forth in the most recent ''CSA Income Poverty Guidelines'' (45 CFR 1060.2) issued by the Community Services Administration; and to pay the portion of the cost of services provided in accordance with the schedule of discounts which, under such schedule, is uncompensated; *Provided,* That (i) charges will be made to such individuals and families in accordance with § 51c.303(f) of subpart C; (ii) reasonable effort shall be made to collect such charges under a billing and collections system; and (iii) the charge to grant funds shall exclude any amounts collected pursuant to paragraph (b)(5)(ii) of this section;

(6) The cost of insurance for medical emergency and out-of-area coverage;

(7) The cost of providing to the staff of the project training related to the provision of health services provided or to be provided by the project, and, to the staff and governing board, if any, training related to the management of an ambulatory care facility, consistent with the applicable requirements of 45 CFR part 74; and

(8) The cost of developing and maintaining a reserve fund where required by State law for prepaid health care plans.

(c) Prior approval by the Secretary of revisions of the budget and project plan is required whenever there is to be a significant change in the scope or nature of project activities.

§ 51c.108 Grant payments.

The Secretary shall from time to time make payments to a grantee of all or a portion of any grant award, either in advance or by way of reimbursement for expenses incurred or to be incurred, to the extent he determines such payments necessary to promote prompt initiation and advancement of the approved project.

§ 51c.109 Nondiscrimination.

(a) Attention is called to the requirements of title VI of the Civil Rights Act of 1964 (78 Stat. 252, (42 U.S.C. 2000d et seq.)) and in particular section 601 of such Act which provides that no person in the United States shall on the grounds of race, color, or national origin be excluded from participation, in be denied the benefits of, or be subjected to discrimination under any program or activity receiving Federal Financial assistance. A regulation implementing such title VI, which applies to grants made under this part, has been issued by the Secretary of Health and Human Services with the approval of the President (45 CFR part 80). In addition, no person shall, on the grounds of age, sex, creed, or marital status (unless otherwise medically indicated), be excluded from participation in, be denied the benefits of, or be subjected to discrimination under any program or activity so receiving Federal financial assistance.

(b) Attention is called to the requirements of section 504 of the Rehabilitation Act of 1973, as amended, which provides that no otherwise qualified handicapped individual in the United States shall, solely by reason of his handicap, be excluded from participation in, be denied the benefits of, or be subjected to discrimination under any program or activity receiving Federal financial assistance.

§ 51c.110 Confidentiality.

All information as to personal facts and circumstances obtained by the project staff about recipients of services shall be held confidential, and shall not be divulged without the individual's consent except as may be required by law or as may be necessary to provide service to the individual or to provide for medical audits by the Secretary or his designee with appropriate safeguards for confidentiality of patient records. Otherwise, information may be disclosed only in summary, statistical, or other form which

does not identify particular individuals.

§51c.111 Publications and copyright.

Except as may otherwise be provided under the terms and conditions of the award, the grantee may copyright without prior approval any publications, films, or similar materials developed or resulting from a project supported by a grant under this part, subject, however, to a royalty-free, nonexclusive, and irrevocable license or right in the Government to reproduce, translate, publish, use, disseminate, and dispose of such materials and to authorize others to do so.

§51c.112 Grantee accountability.

(a) *Accounting for grant award payments.* All payments made by the Secretary shall be recorded by the grantee in accounting records separate from the records of all other funds, including funds derived from other grant awards. With respect to each approved project, the grantee shall account for the sum total of all amounts paid as well as other funds and in-kind contributions by presenting or otherwise making available evidence satisfactory to the Secretary of expenditure for direct and indirect costs meeting the requirements of this part: *Provided, however,* That when the amount awarded for indirect costs was based on a predetermined fixed-percentage of estimated direct costs, the amount allowed for indirect costs shall be computed on the basis of such predetermined fixed-percentage rates applied to the total, or a selected element thereof, of the reimbursable direct costs incurred.

(b) *Accounting for interest earned on grant funds.* Pursuant to section 203 of the Intergovernmental Cooperation Act of 1968 (42 U.S.C. 4213), a State will not be held accountable for interest earned on grant funds, pending their disbursement for grant purposes. A State, as defined in section 102 of the Intergovernmental Cooperation Act, means any one of the several States, the District of Columbia, Puerto Rico, any territory or possession of the United States, or any agency or instrumentality of a State, but does not include the government of the political subdivisions of the State. All grantees other than a State, as defined, must return all interest earned on grant funds to the Federal Government.

(c) *Grant closeout*—(1) *Date of final accounting.* A grantee shall render, with respect to each approved project, a full account, as provided herein, as of the date of the termination of grant support. The Secretary may require other special and periodic accounting.

(2) *Final settlement.* There shall be payable to the Federal Government as final settlement with respect to each approved project the total sum of:

(i) Any amount not accounted for pursuant to paragraph (a) of this section;

(ii) Any credits for earned interest pursuant to paragraph (b) of this section;

(iii) Any other amounts due pursuant to subparts F, M, and O of 45 CFR part 74.

§51c.113 Applicability of 45 CFR part 74.

The provisions of 45 CFR part 74, establishing uniform administrative requirements and cost principles, shall apply to all grants under this part to State and local governments as those terms are defined in subpart A of that part 74. The relevant provisions of the following subparts of part 74 shall also apply to grants to all other grantee organizations under this part:

45 CFR PART 74

Subpart
A General.
B Cash depositories.
C Bonding and insurance.
D Retention and custodial requirements for records.
F Grant-related income.
G Matching and cost sharing.
K Grant payment requirements.
L Budget revision procedures.
M Grant closeout, suspension, and termination.
O Property.
Q Cost principles.

Subpart B—Grants for Planning and Developing Community Health Centers

§51c.201 Applicability.

The regulations of this subpart, in addition to the regulations of subpart

A of this part, are applicable to grants awarded pursuant to section 330(c) of the Act for projects for planning and developing community health centers which will serve medically underserved populations.

§ 51c.202 Application.

To be approved by the Secretary under this subpart, an application for a grant must, in addition to meeting the requirements of § 51c.104 of subpart A, contain information sufficient to enable the Secretary to determine that the project for which the grant is sought will meet the requirements of § 51c.203.

§ 51c.203 Project elements.

A project for the planning and developing of a community health center supported under this subpart must:

(a) Prepare an assessment of the need of the population proposed to be served by the community health center for the services set forth in § 51c.102(c)(1) of subpart A, with special attention to the need of the medically underserved population for such services. Such assessment of need shall, at a minimum, consider the factors listed in § 51c.102(e)(1)–(4).

(b) Design a community health center program for such population, based on such assessment, which indicates in detail how the proposed community health center will fulfill the needs identified in the assessment prepared pursuant to paragraph (a) of this section and how it will meet the requirements contained in subpart C of this part.

(c) Develop a plan for the implementation of the program designed pursuant to paragraph (b) of this section. Such implementation plan shall provide for the time-phased recruitment and training of the personnel essential for the operation of a community health center and the gradual assumption of operational status of the project so that the project will, in the judgment of the Secretary, meet the requirements contained in subpart C of this part as of the end of the project period.

(d) Implement the plan developed pursuant to paragraph (c) of this section in accordance with such paragraph.

(e) Make efforts to secure, within the proposed catchment area of such center to the extent possible, financial and professional assistance and support for the project.

(f) Initiate and encourage continuing community involvement in the development and operation of the project.

(g) Establish standards and qualifications for personnel (including the project director).

(h) Utilize, to the maximum extent feasible, other Federal, State, local, and private resources available for support of the project, prior to use of project funds under this subpart.

§ 51c.204 Grant evaluation and award.

(a) Within the limits of funds determined by the Secretary to be available for such purpose, the Secretary may award grants under this subpart to applicants therefor which will, in his judgment, best promote the purposes of section 330(c) of the Act and the applicable regulations of this part, taking into account:

(1) The degree to which the proposed project satisfactorily provides for the elements set forth in § 51c.203;

(2) The relative need of the population to be served for the services to be provided;

(3) The administrative and management capability of the applicant;

(4) The potential of the project for development of new and effective methods for health services delivery and management;

(5) The soundness of the fiscal plan for assuring effective utilization of grant funds and maximizing non-grant revenue;

(6) The extent to which community resources will be utilized in the project;

(7) The extent to which grants approved under this part will provide for an appropriate distribution of resources throughout the country, taking into consideration the following factors;

(i) The urban-rural area to be served;

(ii) The nature of the organization applying; and

(iii) The organizational structure for delivery of services;

(8) Whether the project's catchment area is exclusive of the area served by a community health center;

(9) The degree to which the applicant intends to integrate services supported by a grant under this subpart with health services provided under other Federally assisted health services or reimbursement programs or projects.

(b) The Secretary may:

(1) Make no more than two grants under this subpart for the same project.

(2) Make a grant under this subpart to an entity which has been awarded one or more grants under section 330(d)(1)(A) and/or section 330(d)(1)(B) of the Act only if the grant under this subpart is for a new project.

Subpart C—Grants for Operating Community Health Centers

§51c.301 Applicability.

The regulations of this subpart, in addition to the regulations of subpart A, are applicable to grants awarded pursuant to section 330(d)(1)(A) of the Act for the costs of operation of community health centers which serve medically underserved populations.

§51c.302 Application.

To be approved by the Secretary under this subpart, an application for a grant must, in addition to meeting the requirements of §51c.104 of subpart A,

(a) Be submitted by an entity which may be a co-applicant which the Secretary determines is a community health center, and

(b) Contain information sufficient to enable the Secretary to determine that the center will meet the requirements of §51c.103.

[41 FR 53205, Dec. 3, 1976, as amended at 42 FR 60418, Nov. 25, 1977]

§51c.303 Project elements.

A community health center supported under this subpart must:

(a) Provide the health services of the center so that such services are available and accessible promptly, as appropriate, and in a manner which will assure continuity of service to the residents of the center's catchment area.

(b) Implement a system for maintaining the confidentiality of patient records in accordance with the requirements of §51c.110 of subpart A.

(c) Have an ongoing quality assurance program which provides for the following:

(1) Organizational arrangements, including a focus of responsibility, to support the quality assurance program and the provision of high quality patient care;

(2) Periodic assessment of the appropriateness of the utilization of services and the quality of services provided or proposed to be provided to individuals served by the center. Such assessments shall:

(i) Be conducted by physicians or by other licensed health professionals under the supervision of physicians;

(ii) Be based on the systematic collection and evaluation of patient records; and

(iii) Identify and document the necessity for change in the provision of services by the center and result in the institution of such change, where indicated.

(d) Develop management and control systems which are in accordance with sound financial management procedures, including the provision for an audit on an annual basis (unless waived for cause by the Secretary) by an independent certified public accountant or a public accountant licensed prior to December 31, 1970, to determine, at a minimum, the fiscal integrity of grant financial transactions and reports, and compliance with the regulations of this part and the terms and conditions of the grant.

(e) Where the cost of care and services furnished by or through the project is to be reimbursed under title XIX or title XX of the Social Security Act, obtain or make every reasonable effort to obtain a written agreement with the title XIX or title XX State agency for such reimbursement.

(f) Have prepared a schedule of fees or payments for the provision of its services designed to cover its reasonable costs of operation and a corresponding schedule of discounts adjusted on the basis of the patient's ability to pay. *Provided*, That such schedule of discounts shall provide for a full discount

to individuals and families with annual incomes at or below those set forth in the most recent CSA Proverty Income Guidelines (45 CFR 1060.2) and for no discount to individuals and families with annual incomes greater than twice those set forth in such Guidelines, except that nominal fees for services may be collected from individuals with annual incomes at or below such levels where imposition of such fees is consistent with project goals.

(g) Make every reasonable effort, including the establishment of systems for eligibility determination, billing, and collection, to:

(1) Collect reimbursement for its costs in providing health services to persons who are entitled to insurance benefits under title XVIII of the Social Security Act, to medical assistance under a State plan approved under title XIX of such Act, to social services and family planning under title XX of such Act, or to assistance for medical expenses under any other public assistance program, grant program, or private health insurance or benefit program on the basis of the schedule of fees prepared pursuant to paragraph (f) of this section without application of any discounts, and

(2) Secure from patients payments for services in accordance with the schedule of fees and discounts required by paragraph (f) of this section.

(h) Have a governing board which meets the requirements of § 51c.304.

(i) Have developed an overall plan and budget for the center that:

(1) Provides for an annual operating budget and a three-year financial management plan which include all anticipated income and expenses related to items which would, under generally accepted accounting principles, be considered income and expense items;

(2) Provides for a capital expenditures plan for at least a three-year period (including the year to which the operating budget described in paragraph (i)(1) of this section is applicable) which includes and identifies in detail the anticipated sources of financing for, and the objective of, each anticipated expenditure in excess of $100,000 related to the acquisition of land, the improvement of land, buildings, and equipment and the replacement, modernization and expansion of buildings and equipment which would, under generally accepted accounting principles, be considered capital items;

(3) Provides for plan review and updating at least annually; and

(4) Is prepared under the direction of the governing board, by a committee consisting of representatives of the governing board, and administrative staff, and the medical staff, if any, of the center.

(j) Establish basic statistical data, cost accounting, management information, and reporting or monitoring systems which shall enable the center to provide such statistics and other information as the Secretary may reasonably require relating to the center's costs of operation, patterns of utilization of services, and the availability, accessibility, and acceptability of its services and to make such reports to the Secretary in a timely manner with such frequency as the Secretary may reasonably require.

(k) Review its catchment area annually to insure that the criteria set out in § 51c.104(b)(2) of subpart A are met and, where such criteria are not met, revise its catchment area, with the approval of the Secretary, to conform to such criteria to the extent feasible.

(l) In the case of a center which serves a population including a substantial proportion of individuals of limited English-speaking ability, have developed a plan and made arrangements responsive to the needs of such populations for providing services to the extent practicable in the language and cultural context most appropriate to such individuals, and have identified an individual on its staff who is fluent in both that language and in English and whose responsibilities include providing guidance to such individuals and to appropriate staff members with respect to cultural sensitivities and bridging linguistic and cultural differences. If more than one non-English language is spoken by such group or groups, an individual or individuals fluent in those languages and English shall be so identified.

(m) Be operated in a manner calculated to preserve human dignity and to maximize acceptability and effective utilization of services.

(n) To the extent possible, coordinate and integrate project activities with the activities of other Federally funded, as well as State and local, health services delivery projects and programs serving the same population.

(o) Establish means for evaluating progress toward the achievement of the specific objectives of the project.

(p) Provide sufficient staff, qualified by training and experience, to carry out the activities of the center.

(q) Assure that facilities utilized in the performance of the project meet applicable fire and life safety codes.

(r) Utilize, to the maximum extent feasible, other Federal, State, and local, and private resources available for support of the project, prior to use of project funds under this part.

(s) Provide for community participation through, for example, contributions of cash or services, loans of full- or part-time staff, equipment, space, materials, or facilities.

(t) Where the center will provide services through contract or other cooperative arrangements with other providers of services, establish rates and methods of payment for health care. Such payments must be made pursuant to agreements, with a schedule of rates and payment procedures maintained by the project. The project must be prepared to substantiate that such rates are reasonable and necessary.

(u) Operate in a manner such that no person shall be denied service by reason of his inability to pay therefor: *Provided, however,* That a charge for the provision of services will be made to the extent that a third party (including a Government agency) is authorized or is under legal obligation to pay such charges.

(v) In addition to the above, projects which are supported with grant funds for the operation of a prepaid health care plan also must provide:

(1) A marketing and enrollment plan, including market analysis, marketing strategy, and enrollment growth projections.

(2) A plan that provides for funding on a capitation basis of such portion of the residents of the catchment area of the center, as the Secretary shall determine.

(3) An assurance that services shall be available to all residents of the catchment area without regard to method of payment or health status.

§51c.304 Governing board.

A governing board for the center shall be established by an applicant as follows:

(a) *Size.* The board shall consist of at least 9 but not more than 25 members, except that this requirement may be waived by the Secretary for good cause shown.

(b) *Composition.* (1) A majority of the board members shall be individuals who are or will be served by the center and who, as a group, represent the individuals being or to be served in terms of demographic factors, such as race, ethnicity, sex.

(2) No more than one-half of the remaining members of the board may be individuals who derive more than 10 percent of their annual income from the health care industry.

(3) The remaining members of the board shall be representative of the community in which the center's catchment area is located and shall be selected for their expertise in community affairs, local government, finance and banking, legal affairs, trade unions, and other commercial and industrial concerns, or social service agencies within the community.

(4) No member of the board shall be an employee of the center, or spouse or child, parent, brother or sister by blood or marriage of such an employee. The project director may be a non-voting, ex-officio member of the board.

(c) *Selection of members.* The method of selection of all governing board members shall be prescribed in the by-laws or other internal governing rules of the center. Such by-laws or other rules must specify a process of selection of individuals on the governing board who represent the population served or to be served by the center so that such individuals, as a group, are representative of such population. Such process of selection in the by-laws or other rules is subject to approval by the Secretary.

(d) *Functions and responsibilities.* (1) The governing board for the center

shall have authority for the establishment of policy in the conduct of the center.

(2) The governing board shall hold regularly scheduled meetings, at least once each month, for which minutes shall be kept.

(3) The governing board shall have specific responsibility for:

(i) Approval for the selection and dismissal of a project director or chief executive officer of the center;

(ii) Establishing personnel policies and procedures, including selection and dismissal procedures, salary and benefit scales, employee grievance procedures, and equal opportunity practices;

(iii) Adopting policy for financial management practices, including a system to assure accountability for center resources, approval of the annual project budget, center priorities, eligibility for services including criteria for partial payment schedules, and long-range financial planning;

(iv) Evaluating center activities including services utilization patterns, productivity of the center, patient satisfaction, achievement of project objectives, and development of a process for hearing and resolving patient grievances;

(v) Assuring that the center is operated in compliance with applicable Federal, State, and local laws and regulations; and

(vi) Adopting health care policies including scope and availability of services, location and hours of services, and quality-of-care audit procedures.

§ 51c.305 Grant evaluation and award.

Within the limits of funds determined by the Secretary to be available for such purpose, the Secretary may award grants under this subpart to applicants therefor which will, in his judgment, best promote the purposes of section 330(d)(1)(A) of the Act and the applicable regulations of this part, taking into consideration;

(a) The extent to which the project would provide for the elements set forth in § 51c.303;

(b) The relative need of the population to be served for the services to be provided;

(c) The potential of the center for the development of new and effective methods for health services delivery and management;

(d) The soundness of the fiscal plan for assuring effective utilization of grant funds and maximizing non-grant revenue;

(e) The administrative and management capability of the applicant;

(f) The extent to which grants approved under this part will provide for an appropriate distribution of resources throughout the country, taking into consideration the following factors:

(1) The urban-rural area to be served;

(2) The nature of the organization applying;

(3) The organizational structure for delivery of services;

(g) The number of users of the center and the level of utilization of services in previous operational periods, if any;

(h) Whether the center's catchment area is exclusive of the area served by another center;

(i) The degree to which the applicant intends to integrate services supported by a grant under this subpart with health services provided under other Federally assisted health services or reimbursement programs or projects;

(j) The extent to which community resources will be utilized by the project;

(k) The extent to which the center will provide preventive health services so as to maintain and improve the health status of the population served; and

(l) The extent to which center operations will emphasize direct health services, efficiency of operations and sound financial management.

Subpart D—Grants for Operating Community Health Projects

§ 51c.401 Applicability.

The regulations of this subpart, in addition to the regulations of subpart A are applicable to grants awarded pursuant to section 330(d)(1)(B) of the Act for the costs of operation of projects which provide health services to medically underserved populations.

§ 51c.402 Application.

To be approved by the Secretary under this subpart, an application for a

grant must, in addition to meeting the requirements of §51c.104 of subpart A, contain information sufficient to enable the Secretary to determine that the project for which the grant is sought will meet the requirements of §51c.403 of this subpart.

§51c.403 Project elements.

A project for the operation of a community health project supported under this subpart must:

(a) Meet all of the requirements of §51c.303 of this part except for paragraph (h).

(b) Provide those services enumerated in §51c.102(c)(1) of this part which the Secretary determines to be feasible and desirable and which are specified in the grant award.

(c) Establish a governing board meeting the requirements of §51c.304 by the end of the period of support under section 330(d)(1)(B) of the Act and this subpart.

§51c.404 Grant evaluation and award.

(a) Within the limits of funds determined by the Secretary to be available for such purpose, the Secretary may award grants under this subpart to applicants therefor which will, in his judgment, best promote the purposes of section 330(d)(1)(B) of the Act and the applicable regulations of this part,

(1) Where the project meets the requirements of §51c.403(a); and

(2) Taking into consideration the following:

(i) The degree to which the project would provide the services enumerated in §51c.102(c)(1) and the feasibility of its providing all of such enumerated services by the end of the period of support under section 330(d)(1)(B) of the Act and this subpart;

(ii) Whether the project will have a governing board meeting the requirements of §51c.304 by the end of the period of support under section 330(d)(1)(B) of the Act and this subpart;

(iii) The degree to which the applicant intends to integrate services supported by a grant under this subpart with health services provided under other Federally assisted health service or reimbursement programs or projects;

(iv) The need of the population to be served for the services to be provided;

(v) The potential of the project for the development of new and effective methods for health services delivery and management;

(vi) The soundness of the fiscal plan for assuring effective utilization of grant funds and maximizing non-grant revenue;

(vii) The administrative and management capacity of the applicant; and

(viii) The extent to which community resources will be utilized in the project.

(b) The Secretary may:

(1) Make no more than two grants for the same entity under section 330(d)(1)(B) of the Act;

(2) Not make any grant under section 330(d)(1)(B) to an entity which, for the same project, has been awarded more than one grant under section 330(c) of the Act;

(3) Not make a grant under section 330(d)(1)(B) to an entity which has been awarded a grant under section 330(d)(1)(A) of the Act.

Subpart E—Acquisition and Modernization of Existing Buildings

§51c.501 Applicability.

The regulations of this subpart, in addition to the regulations of the other applicable subparts of this part, are applicable to grants under section 330 of the Act for project costs which include the cost of acquisition and/or modernization of existing buildings (including the cost of amortizing the principal of, and paying the interest on, loans), except that, these regulations are not applicable to grants for project costs which include the costs of modernization of existing buildings if those costs can otherwise be supported under subparts B, C, or D of this part.

[43 FR 5352, Feb. 7, 1978]

§51c.502 Definitions.

(a) *Equipment* means nonexpendable personal property as defined in 45 CFR 74.132.

(b) *Existing building* means a completed or substantially completed structure, and may include the realty on which it is or is to be located.

(c) *Modernization* means the alteration, repair, remodeling and/or renovation of a building (including the initial equipment thereof and improvements to the building's site) which, when completed, will render the building suitable for use by the project for which the grant is made.

[43 FR 5352, Feb. 7, 1978]

§ 51c.503 Application.

(a) *General requirements.* An application for a grant under this part for a project under subparts B, C, or D which includes the acquisition and/or modernization of an existing building must include the following:

(1) A legal description of the site and a drawing showing the location of the building;

(2) A description of the architectural, structural, and other pertinent characteristics of the building sufficient to show that it is or that it will be, after alteration and renovation or after modernization, suitable for use by the project;

(3) A detailed estimate of the cost of the proposed acquisition and/or modernization;

(4) A description of, and copies of any relevant documents concerning, any existing or proposed financing arrangements for the acquisition and/or modernization;

(5) The proposed schedule for acquisition and/or modernization and occupancy;

(6) An assessment of the environmental impact of the proposed acquisition and/or modernization as called for by section 102(2)(c) of the National Environmental Policy Act of 1969 (42 U.S.C. 4332(c)) and such information as may be necessary to comply with the National Historic Preservation Act of 1966 (16 U.S.C. 470(f));

(7) Reasonable assurances that—

(i) The applicant has or will obtain a fee simple or such other estate or interest in the site, including necessary easements and rights-of-way, sufficient to assure for a period of not less than 20 years (in the case of interim facilities, for the period constituting the estimated useful life of such facilities) undisturbed use and possession for the purpose of the operation of the project;

(ii) The building will be used for the purposes for which the grant is made;

(iii) The building complies, or after alteration and renovation or after modernization will comply, with applicable State and local codes and with:

(A) ''American National Standard Specifications for Making Buildings and Facilities Accessible to, and Usable by, the Physically Handicapped'' Number ANSI A117.1–1961 (R 1971), as modified by other standards prescribed by the Secretary or the Administrator of the General Services Administration. The applicant shall be responsible for conducting inspections to insure compliance with the specifications;

(B) The applicable standards set forth in Life Safety Code 1973, NFPA No. 101, which is hereby incorporated by reference and made a part hereof. Copies of such document are available for examination at the Department's and Regional Offices' Information Centers listed in 45 CFR 5.31 and may also be obtained from the National Fire Protection Association, 470 Atlantic Avenue, Boston, MA 02210 for $3.00 per copy.

(iv) In the case of a public applicant with an approved project which involves the displacement of persons or businesses on or after January 2, 1971, whose real property has or will be taken, the applicant will comply with the provisions of the Uniform Relocation Assistance and Real Property Acquisition Policies Act of 1970 (Pub. L. 91–646) and the applicable regulations issued thereunder (45 CFR part 15);

(v) Sufficient funds will be available to meet any portion of the cost of acquiring and/or modernizing the building not borne by the grant under this part;

(vi) Sufficient funds will be available after acquisition and/or modernization of the building for effective use of the building for the purposes of the project;

(vii) The applicable requirements of the Flood Disaster Protection Act of 1973 have been met;

(8) Such other information as the Secretary may reasonably require.

(b) *Requirement for acquisition grants.* Except for a grant solely for amortization of principal and payment of interest on an existing loan, an application for a grant for a project which includes

the acquisition of an existing building must include, in addition to the requirements of paragraph (a) of this section, evidence satisfactory to the Secretary that the applicant has explored other alternatives to the proposed acquisition (such as leasing facilities or acquiring other facilities in the project's catchment area) and that the proposed acquisition constitutes the soundest alternative from a financial and program standpoint.

(c) *Requirements for modernization grants.* In addition to the requirements of paragraph (a) of this section, an application for a grant for a project which includes modernization of an existing building must include the following:

(1) Plans and specifications for the proposed modernization which conform to the standards specified in §51c.503(a)(7)(iii);

(2) Reasonable assurance that any laborer or mechanic employed by any contractor or subcontractor in the performance of work on the modernization project will be paid wages at rates not less than those prevailing on similar work in the locality as determined by the Secretary of Labor under the Davis-Bacon Act (40 U.S.C. 276a *et seq.*) and will receive compensation at a rate not less than one and one-half times his basic rate of pay for all hours worked in any workweek in excess of 8 hours in any calendar day; and

(3) Copies of any construction and materials contracts already entered into for the proposed modernization.

[41 FR 57000, Dec. 30, 1976, as amended at 43 FR 5352, Feb. 7, 1978]

§51c.504 Project elements.

(a) *General requirements.* A grantee which has received a grant under section 330 of the Act for a project which includes the acquisition and/or modernization of an existing building must:

(1) *Assurances.* Comply with the assurances provided pursuant to this subpart.

(2) *Approval of estimated cost.* Not enter into any contract for the acquisition and/or modernization funded under this subpart where the cost of such acquisition and/or modernization exceeds the estimates in the application, without the prior approval of the Secretary.

(3) *Non-default.* Make every effort to prevent any default on any loan secured by the building and, in the event of a default, promptly notify the Secretary of the default and make every effort on a timely basis to cure the default.

(b) *Requirements for acquisition grants.* In addition to the requirements of paragraph (a) of this section, a grantee which has received a grant under section 330 of the Act for a project which includes the acquisition of an existing building must:

(1) *Bona-fide sale.* Acquire or, in the case of a grant solely for amortization of principal and payment of interest on an existing loan, have acquired the existing building pursuant to a bona-fide sale involving an actual cost to the applicant and resulting in additional or improved facilities for the purposes of the project.

(2) *Standards of construction and equipment.* Except in the case of a grant solely for amortization of principal and payment of interest on an existing loan, obtain a determination by the Secretary that the facility conforms (or upon completion of any necessary alteration and renovation or modernization will conform) to the standards set forth in §51c.503(a)(7)(iii) of this subpart before entering into a final or unconditional contract for the acquisition. Where the Secretary finds that exceptions to or modifications of any such standards would be consistent with the purposes of the Act and of the program, he may authorize such exceptions or modifications.

(3) *Financing.* Where the grantee will obtain a loan secured by the building in order to acquire the building, obtain such financing at the lowest current rate prevailing in the area for comparable loans on comparable facilities.

(c) *Requirements for modernization grants.* In addition to the requirements of paragraph (a) of this section, a grantee which has received a grant under section 330 of the Act for a project which includes the modernization of an existing building must:

(1) *Costs in excess of approved costs.* Finance all costs in excess of the estimated costs approved in the application and submit to the Secretary for

prior approval any changes that substantially alter the scope of the function, utilities, or safety of the facility.

(2) *Competitive bids.* (i) Obtain the approval of the Secretary before the project is advertised or placed on the market for bidding; such approval must include a determination by the Secretary that the final plans and specifications conform to the standards set forth in § 51c.503(a)(7)(iii) of these regulations.

(ii) Except as otherwise provided by State or local law, contract for construction (including the purchase and installation of built-in equipment) on a lump sum fixed-price basis, and award contracts on the basis of competitive bidding obtained by public advertising with award of the contracts to the lowest responsive and responsible bidders. The provision for exceptions based on State and local law shall not be invoked to give local contractors or suppliers a percentage preference over non-local contractors bidding for the same contract. Such practices are precluded by this paragraph.

(3) *Construction contracts.* (i) Include the following conditions and provisions in all construction contracts for the modernization project:

(A) The provisions set forth in ''DHHS Requirements for Federally Assisted Construction Contracts Regarding Labor Standards and Equal Employment Opportunities,'' Form DHHS 514 (rev. 7/76) (issued by the Office of Grants Administration Policy, U.S. Department of Health and Human Services) pertaining to the Davis-Bacon Act, the Contract Work Hours Standards Act, and the Copeland Act (Anti-Kickback) Regulations, except in the case of contracts in the amount of $2,000 or less; and pertaining to Executive Order 11246, 30 FR 12319 (September 24, 1965), as amended, relating to nondiscrimination in construction contract employment, except in the case of contracts in the amount of $10,000 or less;

(B) That the contractor shall furnish performance and payment bonds each of which shall be in the full amount of the contract price, and shall maintain, during the life of the contract, adequate fire, workmen's compensation, public liability, and property damage insurance: *Provided, however,* That in the case of a State or local unit of government which enters into a construction contract of less than $100,000, State or local provisions with respect to performance and payment bonds shall be deemed to meet the requirements of this paragraph; and

(C) That the Secretary shall have access at all reasonable times to work wherever it is in preparation or progress, and the contractor shall provide proper facilities for such access and inspection.

(ii) *Executive Order 11246.* Comply with the applicable requirements of Executive Order 11246, 30 FR 12319 (September 24, 1965) as amended, relating to nondiscrimination in construction contract employment, and the applicable rules, regulations, and procedures prescribed pursuant thereto.

(4) *Modernization supervision.* Provide and maintain competent and adequate architectural or engineering supervision and inspection at the modernization site to insure that the completed work conforms with the plans and specifications.

(5) *Completion responsibility.* Complete the modernization in accordance with the grant application and the approved plans and specifications.

(6) *Progress reports.* Furnish progress reports and such other information concerning the modernization as the Secretary may require.

(d) The Secretary may at any time approve exceptions to the provisions of this section where he finds that such exceptions are not inconsistent with section 330 of the Act, other requirements of law, or the purposes of the program.

[41 FR 57000, Dec. 30, 1976, as amended at 43 FR 5352, Feb. 7, 1978]

§ 51c.505 Determination of cost.

The cost of acquisition and/or modernization of existing buildings for which funds may be granted under this part will be determined by the Secretary, utilizing such documentation submitted by the applicant as the Secretary may prescribe (including the reports of such real estate appraisers as the Secretary may approve) and other relevant factors, taking into consideration only that portion of the existing

building necessary for the operation of the approved project.

[41 FR 5700, Dec. 30, 1976]

§51c.506 Use of grant funds.

Grant funds may be used to amortize the principal of or pay interest on a loan or mortgage on an existing building acquired under this part, including a building purchased by a grantee prior to the promulgation of this part, but only if the building is being used for the purposes of section 330 and complies with the applicable provisions of this subpart and only to the extent the Secretary finds such principal amounts and interest rates to be reasonable.

[41 FR 5700, Dec. 30, 1976]

§51c.507 Facility which has previously received Federal grant.

No grant for the acquisition of a facility which has previously received a Federal grant for construction, acquisition, or equipment shall serve either to reduce or restrict the liability of the applicant or any other transferor or transferee from any obligation of accountability imposed by the Federal Government by reason of such prior grant.

[41 FR 5700, Dec. 30, 1976]

PARTS 51d—51g [RESERVED]

PART 52—GRANTS FOR RESEARCH PROJECTS

Sec.
52.1 To which programs do these regulations apply?
52.2 Definitions.
52.3 Who is eligible to apply for a grant?
52.4 How to apply for a grant.
52.5 Evaluation and disposition of applications.
52.6 Grant awards.
52.7 Use of funds; changes.
52.8 Other HHS regulations and policies that apply.
52.9 Additional conditions.

AUTHORITY: 42 U.S.C. 216.

§52.1 To which programs do these regulations apply?

(a) *General.* The regulations of this party apply to all health-related research project grants administered by the PHS or its components, except for grants for health services research, demonstration, and evaluation projects administered by the Agency for Health Care Policy and Research. These regulations do not apply to research grants that are not for the support of an identified research project (sometimes referred to as general research support grants), grants for the construction or operation of research facilities, grants for prevention or educational programs, demonstration grants, traineeships, training grants, or to the support of research training under the National Research Service Awards program.

(b) *Specific programs covered.* From time to time the Secretary will publish a list of the research project grant programs covered by this part. The list is for informational purposes only and is not intended to restrict the statement of applicability in paragraph (a) of this section. In addition, information on particular research project grant programs, including applications and instructions, may be obtained from the component of the PHS that administers the program.

[61 FR 55105, Oct. 24, 1996.]

§52.2 Definitions.

As used in this part:

Act means the Public Health Service Act, as amended (42 U.S.C. 201 *et seq.*).

Grantee means the institution, organization, individual or other person designated in the grant award document as the responsible legal entity to whom a grant is awarded under this part. The term shall also mean the recipient of a cooperative agreement awarded under this part.

HHS means the Department of Health and Human Services.

Principal investigator means a single individual designated by the grantee in the grant application and approved by the Secretary, who is responsible for the scientific and technical direction of the project.

Project means the particular activity for which funding is sought under this part as described in the application for grant award.

Public Health Service and *PHS* means the operating division of the Department that consists of the Agency for

Health Care Policy and Research, the Centers for Disease Control and Prevention, the Food and Drug Administration, the Health Resources and Services Administration, the Indian Health Service, the National Institutes of Health, the Office of the Assistant Secretary for Health, the Substance Abuse and Mental Health Administration, and the Agency for Toxic Substances and Disease Registry.

Research means a systematic investigation, study or experiment designed to contribute to general knowledge relating broadly to public health by establishing, discovering, developing, elucidating or confirming information about, or the underlying mechanisms relating to, the biological functions, diseases, or related matters to be studied.

Secretary means the Secretary of HHS and any other officer or employee of the HHS to whom the authority involved may be delegated.

[61 FR 55105, Oct. 24, 1996]

§ 52.3 Who is eligible to apply for a grant?

(a) *Persons eligible.* Any individual, corporation, public or private institution or agency, or other legal entity shall be eligible for a grant award, except:

(1) An individual or entity which is otherwise ineligible for an award under applicable law or regulation;

(2) Federal agencies or institutions, unless specifically authorized by law to receive the grant; or

(3) Individuals, corporations, institutions, agencies, and other entities during the period they are debarred or suspended from eligibility for Federal financial assistance (see 45 CFR part 76).

(b) *Permissible activities within research projects.* Any project found by the Secretary to be a research project within the meaning of this part shall be eligible for a grant award. Eligible projects may consist of laboratory, clinical, population, field, statistical, basic, applied or other types of investigations, studies or experiments, or combinations thereof, and may either be limited to one, or a particular aspect of a problem or subject, or may consist of two or more related problems or subjects for concurrent or consecutive investigation and involving multiple disciplines, facilities and resources.

(c) *Preferences.* In the award of grants for international research relating to the development and evaluation of vaccines and treatments for AIDS under section 2315 of the Act, preference shall be given to:

(1) Activities conducted by, or in cooperation with, the World Health Organization, and

(2) With respect to activities in the Western Hemisphere, activities conducted by, or in cooperation with, the Pan American Health Organization or the World Health Organization.

[61 FR 55105, Oct. 24, 1996]

§ 52.4 How to apply for a grant.

Each institution interested in applying for a grant under this part must submit an application at such time and in such form and manner as the Secretary may prescribe.

[61 FR 55105, Oct. 24, 1996]

§ 52.5 Evaluation and disposition of applications.

(a) *Evaluation.* All applications filed in accordance with § 52.4 shall be evaluated by the Secretary through such officers and employees and such experts or consultants engaged for this purpose as the Secretary determines are specially qualified in the areas of research involved in the project, including review by an appropriate National Advisory Council or other body as may be required by law. The Secretary's evaluation shall take into account among other pertinent factors the scientific merit and significance of the project, the competency of the proposed staff in relation to the type of research involved, the feasibility of the project, the likelihood of its producing meaningful results, the proposed project period, and the adequacy of the applicant's resources available for the project and the amount of grant funds necessary for completion, and in the case of applications for support of research in emergency medical services, special consideration shall be given to applications for grants for research relating to the delivery of emergency medical services in rural areas.

(b) *Disposition.* On the basis of the Secretary's evaluation of an application in accordance with paragraph (a) of this section and subject to approvals, recommendations or consultations by the appropriate National Advisory Council or other body as may be required by law, the Secretary will (1) approve, (2) defer because of either lack of funds or a need for further evaluation, or (3) disapprove support of the proposed project in whole or in part. With respect to approved projects, the Secretary will determine the project period (subject to extension as provided in §52.7(c)) during which the project may be supported. Any deferral and disapproval of an application will not preclude its reconsideration or a reapplication.

[45 FR 12240, Feb. 25, 1980; 45 FR 20096, Mar. 27, 1980]

§52.6 Grant awards.

(a) Within the limits of funds available for that purpose, the Secretary will award a grant to those applicants whose approved projects will in the Secretary's judgment best promote the purposes of the statute authorizing the grant and the regulations of this part. The date specified by the Secretary as the beginning of the project period shall be no later than 9 months following the date of any initial or new award statement unless the Secretary finds that because of the nature of a project or the grantee's particular circumstances earlier assurance of grant support is required to initiate the project. Any funds granted under this part shall be expended solely for the purposes for which the funds were granted in accordance with the approved application and budget, the regulations of this part, the terms and conditions of the award and the applicable cost principles prescribed in subpart Q of 45 CFR part 74.

(b) *Evaluation of unapproved drug treatments for AIDS.* Grants under section 2314 of the Act to support research relating to the evaluation of drug treatments for AIDS not approved by the Commissioner of Food and Drugs, shall be subject to appropriate scientific and ethical guidelines established by the Secretary for each project, pursuant to section 2314(c) of the Act. In order to receive a grant, the applicant must agree to comply with those guidelines.

(c) *Notice of grant award.* (1) The notice of grant award specifies how long HHS intends to support the project without requiring the project to recompete for funds. This period, called the project period, will usually be for 1–5 years.

(2) Generally, the grant will initially be for one year and subsequent continuation awards will also be for one year at a time. A grantee must submit an application at the time and in the form and manner as the Secretary may prescribe to have support continued for each subsequent year.

(3) Neither the approval of any application nor the award of any grant commits or obligates the United States in any way to make any additional, supplemental, continuation, or other award with respect to any approved application or portion of an approved application.

(d) *Multiple or concurrent awards.* Whenever a research project involves a number of different but related problems, activities or disciplines which require evaluation by different groups, or whenever support for a project could be more effectively administered by separate handling of separate aspects of the project, the Secretary may evaluate, approve and make awards pursuant to two or more concurrent applications, each dealing with one or more specified aspects of the project.

(e) *Unobligated balances.* The Secretary may permit unobligated grant funds remaining in the grant account at the close of a budget period to be carried forward for obligation during a subsequent budget period, provided a continuation award is made for that period and the Secretary's written approval is obtained.

(f) *Award for continuation of project under new grantee.* The Secretary, upon application in accordance with the provisions of §52.4 and without further action by a Council or other body, may make a grant to any institution or other person eligible under §52.3 for continuation of a currently supported project for which a grant was previously made to another institution or person, provided the Secretary finds

that the change in the conduct of the project is consonant with the previous evaluation and approval of the project under § 52.5.

[45 FR 12240, Feb. 25, 1980; 45 FR 20096, Mar. 27, 1980; 61 FR 55105, Oct. 24, 1996]

§ 52.7 Use of funds; changes.

(a) *Delegation of fiscal responsibility.* The grantee may not in whole or in part delegate or transfer to another person responsibility for the use or expenditure of grant funds.

(b) *Changes in project.* The permissible changes by the principal investigator in the approved project shall be limited to changes in methodology, approach or other aspects of the project to expedite achievement of the project's research objectives, including changes that grow out of the approved project and serve the best scientific strategy. If the grantee and the principal investigator are uncertain whether a change complies with this provision, the question must be referred to the Secretary for a final determination.

(c) *Changes in project period.* The project period determined pursuant to § 52.5(b) may be extended by the Secretary, with or without additional grant support, for such an additional period as the Secretary determines may be required to complete, or fulfill the purposes of, the approved project.

[45 FR 12240, Feb. 25, 1980]

§ 52.8 Other HHS regulations and policies that apply.

Several other HHS policies and regulations apply to grants under this part. These include, but are not necessarily limited to:

37 CFR part 401—Rights to inventions made by nonprofit organizations and small business firms under government grants, contracts, and cooperative agreements

42 CFR part 50, subpart A—Responsibility of PHS awardee and applicant institutions for dealing with and reporting possible misconduct in science

42 CFR part 50, subpart D—Public Health Service grant appeals procedure

42 CFR part 50, subpart F—Responsibility of applicants for promoting objectively in research for which PHS funding is sought

45 CFR part 16—Procedures of the Departmental Grant Appeals Board

45 CFR part 46—Protection of human subjects

45 CFR part 74—Administration of grants

45 CFR part 75—Informal grant appeals procedures

45 CFR part 76—Governmentwide debarment and suspension (nonprocurement) and governmentwide requirements for drug-free workplace (grants)

45 CFR part 80—Nondiscrimination under programs receiving Federal assistance through the Department of Health and Human Services—effectuation of title VI of the Civil Rights Act of 1964

45 CFR part 81—Practice and procedure for hearings under part 80 of this title

45 CFR part 84—Nondiscrimination on the basis of handicap in programs and activities receiving Federal financial assistance

45 CFR part 86—Nondiscrimination on the basis of sex in education programs and activities receiving or benefiting from Federal financial assistance

45 CFR part 91—Nondiscrimination on the basis of age in HHS programs or activities receiving Federal financial assistance

45 CFR part 92—Uniform administrative requirements for grants and cooperative agreements to State and local governments

45 CFR part 93—New restrictions on lobbying

59 FR 14508 (March 28, 1994)—NIH Guidelines on the Inclusion of Women and Minorities as Subjects in Clinical Research.

NOTE: This policy is subject to changes, and interested persons should contact the Office of Research on Women's Health, NIH, Room 201, Building 1, MSC 0161, BETHESDA, MD 20892–0161 (301–402–1770; not a toll-free number) to obtain references to the current version and any amendments.]

59 FR 34496 (July 5, 1994)—NIH Guidelines for Research Involving Recombinant DNA Molecules.

NOTE: This policy is subject to changes, and interested persons should contact the Office of Recombinant DNA Activities, NIH,

Suite 323, 6000 Executive Boulevard, MSC 7010, Bethesda, MD 20892–7010 (301–496–9838; not a toll-free number) to obtain references to the current version and any amendments.]

''PHS Grants Policy Statement,'' DHHS Publication No. (OASH) 94–50,000 (Rev.) April 1, 1994.

NOTE: This policy is subject to changes, and interested persons should contact the Grants Policy Branch, OASH, Room 17A45, Parklawn Building, 5600 Fishers Lane, Rockville, MD 20857 (301–443–1874; not a toll-free number) to obtain references to the current version and any amendments.]

''Public Health Service Policy on Humane Care and Use of Laboratory Animals,'' Office for Protection from Research Risks, NIH (Revised September 1986).

NOTE: This policy is subject to changes, and interested persons should contact the Office for Protection from Research Risks, NIH, Suite 3B01, 6100 Executive Boulevard, MSC 7507, Rockville, MD 20852–7507 (301–496–7005; not a toll-free number) to obtain references to the current version and any amendments.]

[61 FR 55106 Oct. 24, 1996]

§52.9 Additional conditions.

The Secretary may with respect to any grant award or class of awards impose additional conditions prior to or at the time of any award when in the Secretary's judgment such conditions are necessary to assure or protect advancement of the approved project, the interests of the public health, or the conservation of grant funds.

[45 FR 12240, Feb. 25, 1980; 45 FR 20096, Mar. 27, 1980]

PART 52a—NATIONAL INSTITUTES OF HEALTH CENTER GRANTS

Sec.

52a.1 To which programs do these regulations apply?
52a.2 Definitions.
52a.3 Who is eligible to apply?
52a.4 What information must each application contain?
52a.5 How will NIH evaluate applications?
52a.6 Information about grant awards.
52a.7 For what purposes may a grantee spend grant funds?
52a.8 Other HHS regulations and policies that apply.
52a.9 Additional conditions.

AUTHORITY: 42 U.S.C. 216, 285a–3, 285a–6(c)(1)(E), 285a–7(c)(1)(G), 285b–4, 285c–5, 285d–6, 285e–2, 285e–3, 285f–1, 285g–5, 285g–7, 285m–3, 285n–2, 285o–2, 300cc–16.

SOURCE: 57 FR 61006, Dec. 23, 1992, unless otherwise noted.

§52a.1 To which programs do these regulations apply?

(a) The regulations of this part apply to grants by the National Institutes of Health and its organizational components to support the planning, establishment, strengthening or expansion, and operation of research and demonstration and/or multipurpose centers in the health fields described in this paragraph. Specifically, these regulations apply to national cancer research and demonstration centers (including payments for construction, but not including the acquisition of land), as authorized by section 414 of the Act; national cancer research and demonstration centers with respect to breast cancer, as authorized by section 417 of the Act; national cancer research and demonstration centers with respect to prostate cancer, as authorized by section 417A of the Act; national research and demonstration centers for heart, blood vessel, lung, and blood diseases, sickle cell anemia, blood resources and pediatric cardiovascular diseases (including payments for construction, but not including the acquisition of land), as authorized by section 422 of the Act; research and training centers in diabetes mellitus and related endocrine and metabolic diseases (including digestive, kidney, and urologic diseases), and research and training centers regarding nutritional disorders, including obesity, as authorized by section 431 of the Act; multipurpose arthritis and musculoskeletal diseases centers (including payments for alteration, remodeling, improvement, expansion, and repair of existing buildings, and the provision of equipment necessary to make them suitable for use as a center, but not construction), as authorized by Section 441 of the Act; Alzheimer's disease centers, as authorized by section 445 of the Act; Claude D. Pepper Older Americans Independence Centers, as authorized by section 445A of the Act; research centers regarding chronic fatigue syndrome, as authorized by section 447 of

the Act; research centers with respect to contraception and infertility, as authorized by section 452A of the Act; child health research centers, as authorized by section 452C of the Act; multipurpose deafness and other communication disorders centers (including payments for alteration, remodeling, improvement, expansion, and repair of existing buildings, and the provision of equipment necessary to make them suitable for use as a center, but not construction), as authorized by section 464C of the Act; national alcohol research centers, as authorized by section 464J of the Act; national drug abuse research centers, as authorized by section 464N of the Act; and centers for acquired immunodeficiency syndrome research (including payments for renovation and leasing of existing buildings, and the provision of equipment necessary to make them suitable for use as a center, but not construction), as authorized by section 2316 of the Act.

(b) This part does not apply to:

(1) Grants for construction (see 42 CFR part 52b), except as noted in paragraph (a) of this section;

(2) Grants covered by 42 CFR part 52 (grants for research projects); or

(3) Grants for general research support under section 301(a)(3) of the Act (42 U.S.C. 241(a)(3)).

(c) This part also applies to cooperative agreements made to support the centers specified in paragraph (a) of this section. When a reference is made in this part to ''grants,'' the reference shall include ''cooperative agreements.''

[61 FR 55108, Oct. 24, 1996]

§ 52a.2 Definitions.

As used in this part:

Act means the Public Health Services Act, as amended (42 U.S.C. 201 et seq.).

Center means:

(1) For purposes of grants authorized by section 414 of the Act, an agency or institution which provides for planning and conducting basic and clinical research into, training in, and demonstration of advanced diagnostic, control, prevention and treatment methods for cancer;

(2) For purposes of grants authorized by section 417 of the Act, an agency or institution which provides for planning and conducting basic, clinical, epidemiological, psychosocial, prevention and treatment research and related activities on breast cancer;

(3) For purposes of grants authorized by section 417A of the Act, an agency or institution which provides for planning and conducting basic, clinical, epidemiological, psychosocial, prevention and control, treatment, research, and related activities on prostate cancer;

(4) For purposes of grants authorized by section 422 of the Act, an agency or institution which provides for planning and basic and clinical research into, training in, and demonstration of, management of blood resources and advanced diagnostic, prevention, and treatment methods (including emergency services) for heart, blood vessel, lung, or blood diseases including sickle cell anemia;

(5) For purposes of grants authorized by section 431 of the Act, a single institution or a consortium of cooperating institutions which conducts research, training, information programs, epidemiological studies, data collection activities and development of model programs in: diabetes mellitus and related endocrine and metabolic diseases; kidney and urologic diseases; or nutritional disorders, including obesity;

(6) For purposes of grants authorized by section 441 of the Act, a single institution or a consortium of cooperating institutions which conducts basic and clinical research into arthritis and musculoskeletal diseases and orthopedic procedures, and provides training and information programs for health professionals and the general public;

(7) For purposes of grants authorized by section 445 of the Act, an entity (including a university medical center) which conducts basic and clinical research (including multidisciplinary research) into, training in, and demonstration of advanced diagnostic, prevention, and treatment methods for Alzheimer's disease;

(8) For purposes of grants authorized by section 445A of the Act, an entity which conducts research into the aging processes and into the diagnosis and treatment of diseases, disorders, and

complications related to aging, including menopause, which includes research on the treatments, and on medical devices and other medical interventions regarding these diseases, disorders, and complications that can assist individuals in avoiding institutionalization and prolonged hospitalization and in otherwise increasing the independence of the individuals;

(9) For purposes of grants authorized by section 447 of the Act, a single institution or consortium of cooperating institutions which conducts basic and clinical research on chronic fatigue syndrome;

(10) For purposes of grants authorized by section 452A of the Act, a single institution or consortium of cooperating institutions which conducts clinical and other applied research, training programs, continuing education programs, and information programs with respect to methods of contraception and infertility;

(11) For purposes of grants authorized by section 452C of the Act, an agency or institution which conducts research with respect to child health, and gives priority to the expeditious transfer of advances from basic science to clinical applications and improving the care of infants and children;

(12) For purposes of grants authorized by section 464C of the Act, a single institution or a consortium of cooperating institutions which conducts basic and clinical research into, training in, information and continuing education programs for health professionals and the general public about, and demonstration of, advanced diagnostic, prevention, and treatment methods for disorders of hearing and other communication processes and complications resulting from these disorders;

(13) For purposes of grants authorized by section 464J of the Act, an entity engaged in long-term interdisciplinary research relating to alcoholism and other alcohol problems;

(14) For purposes of grants authorized by section 464N of the Act, an entity for interdisciplinary research relating to drug abuse and other biomedical, behavioral, and social issues related to drug abuse; or

(15) For purposes of grants authorized by section 2316 of the Act, an entity for basic and clinical research into, and training in, advanced diagnostic, prevention, and treatment methods for acquired immunodeficiency syndrome.

(16) As provided in the section of the Act authorizing the particular program or on the determination of the Director, a center may include the facilities of a single institution or a consortium of cooperating institutions and, if practical, may be part of an equitable geographical distribution of centers with proven research capabilities.

Director means the Director of NIH or the organizational component authorized to award grants to support centers under this part.

Grant(s) means, unless the context otherwise requires, an award of funds to support a center authorized under §52a.1. The term includes cooperative agreement(s).

NIH means the National Institutes of Health and its organizational components that award grants.

Nonprofit as applied to any agency or institution means an agency or institution which is a corporation or an association, no part of the net earnings of which inures or may lawfully inure to the benefit of any private shareholder or individual.

Project period means the period of time, from one to five years, specified in the notice of grant award that the NIH or the awarding component intends to support a proposed center without requiring the center to recompete for funds.

[57 FR 61006, Dec. 23, 1992, as amended at 61 FR 55108, Oct. 24, 1996]

§52a.3 Who is eligible to apply?

(a) Any public or private nonprofit agency, institution, or consortium of agencies is eligible to apply for a grant under sections 414, 417, 417A, 422, 445, 445A, 447, 452A, and 2316 of the Act.

(b) Any public or private nonprofit or for-profit agency, institution, or consortium of agencies is eligible to apply for a grant under sections 431, 441, 452C, 464C, 464J, and 464N of the Act.

(c) Any applicant under this part must be located in a State, the District of Columbia, Puerto Rico, the Virgin

Islands, the Canal Zone, Guam, American Samoa, or the successor States of the Trust Territory of the Pacific Islands (the Federated States of Micronesia, the Republic of the Marshall Islands, and the Republic of Palau).

[57 FR 61006, Dec. 23, 1992, as amended at 61 FR 55109, Oct. 24, 1996]

§ 52a.4 What information must each application contain?

Each application under this part must include detailed information as to the following:

(a) The personnel, facilities, and other resources available to the applicant with which to initiate and maintain the proposed center grants program;

(b) Any research, training, demonstration, or information dissemination activities in which the applicant is currently engaged; the sources of funding for these activities; and the relevance of these activities to the proposed center grants program;

(c) Proposed research, training, demonstration, and information dissemination activities;

(d) The proposed organizational structure of the center and the relationship of the proposed center to the applicant organization(s);

(e) The names and qualifications of the center director and key staff members who would be responsible for conducting the proposed activities;

(f) Proposed methods for monitoring and evaluating individual activities and the overall center program;

(g) Proposed methods for coordinating the center's activities, where appropriate, with similar efforts by other public and private organizations;

(h) The availability of any community resources necessary to carry out proposed activities; and

(i) Efforts to be made to generate and collect income from sources other than NIH to be used to further the purposes of the center program. NIH encourages these efforts. Income may include, but is not limited to, that generated from the sale or rental of products or services produced by grant-supported activities, such as laboratory tests, computer time, and payments received from patients or third parties, where appropriate (the disposition of grant-related income is governed by 45 CFR 74.40 through 74.47 and 45 CFR 92.25);

(j) The proposed budget for the center and a justification for the amount of the grant funds requested; and

(k) Any other information that the Director of the awarding institute may request.

[Approved under OMB Control Number 0925–0001]

§ 52a.5 How will NIH evaluate applications?

(a) NIH considers the following in evaluating Center grant applications:

(1) The scientific and technical merit of the proposed program;

(2) The qualifications and experience of the center director and other key personnel;

(3) The statutory and program purposes to be accomplished;

(4) The extent to which the various components of the proposed program would be coordinated into one multidisciplinary effort within the center;

(5) The extent to which the center's activities would be coordinated with similar efforts by other organizations;

(6) The administrative and managerial capability of the applicant;

(7) The reasonableness of the proposed budget in relation to the proposed program; and

(8) Other factors which the awarding institute, center, or division considers appropriate in light of its particular statutory mission.

(b) Where required by statute or NIH policy, applications are reviewed by appropriate national advisory councils or boards before awards are made. NIH grants may be awarded generally only after approval recommendations from both appropriate scientific peer review groups and national advisory councils or boards.

§ 52a.6 Information about grant awards.

(a) The notice of grant award specifies how long NIH intends to support the project without requiring the project to recompete for funds. This period, called the project period, will usually be for 1–5 years.

(b) Generally, the grant will initially be for one year, and subsequent continuation awards will also be for one

year at a time. A grantee must submit a separate application to have the support continued for each subsequent year. Decisions regarding continuation awards and the funding level of such awards will be made after consideration of such factors as the grantee's progress and management practices, and the availability of funds. In all cases, continuation awards require a determination by the NIH that continued funding is in the best interest of the Federal Government.

(c) Neither the approval of any application, nor the award of any grant commits or obligates the Federal Government in any way to make any additional, supplemental, continuation, or other award with respect to any approved application or portion of an approved application.

[Approved under OMB Control Number 0925–0001]

§52a.7 For what purposes may a grantee spend grant funds?

A grantee shall spend funds it receives under this part solely in accordance with the approved application and budget, the authorizing legislation, the regulations of this part, the terms and conditions of the award, and the applicable cost principles prescribed in 45 CFR 74.27.

[61 FR 55109, Oct. 24, 1996]

§52a.8 Other HHS regulations and policies that apply.

Several other regulations and policies apply to this part. These include, but are not necessarily limited to:

42 CFR part 50, Subpart A—Responsibilities of PHS awardee and applicant institutions for dealing with and reporting possible misconduct in science

42 CFR part 50, Subpart D— Public Health Service grant appeals procedures

42 CFR part 50, subpart F—Responsibility of applicants for promoting objectivity in research for which PHS funding is sought

45 CFR part 16— Procedures of the Departmental Grant Appeals Board

45 CFR part 46—Protection of human subjects

45 CFR part 74—Uniform administrative requirements for awards and subawards to institutions of higher education, hospitals, other nonprofit organizations, and commercial organizations; and certain grants and agreements with states, local governments and Indian tribal governments

45 CFR part 75— Informal grant appeals procedures

45 CFR part 76— Governmentwide debarment and suspension (nonprocurement) and governmentwide requirements for drug-free workplace (grants)

45 CFR part 80— Nondiscrimination under programs receiving Federal assistance through the Department of Health and Human Services—Effectuation of Title VI of the Civil Rights Act of 1964

45 CFR part 81— Practice and procedure for hearings under part 80 of this title

45 CFR part 84— Nondiscrimination on the basis of handicap in programs and activities receiving or benefiting from Federal financial assistance

45 CFR part 86— Nondiscrimination on the basis of sex in education programs and activities receiving or benefiting from Federal financial assistance

45 CFR part 91— Nondiscrimination on the basis of age in HHS programs or activities receiving Federal financial assistance

45 CFR part 92— Uniform administrative requirements for grants and cooperative agreements to State and local governments

45 CFR part 93— New restrictions on lobbying

59 FR 14508 (March 28,1994)—NIH Guidelines on the Inclusion of Women and Minorities as Subjects in Clinical Research.

[NOTE: This policy is subject to change, and interested persons should contact the Office of Research on Women's Health, NIH, Room 201, MSC 0161, BETHESDA, MD 20892–0601 (301–402–1770; not a toll-free number) to obtain references to the current version and any amendments.]

59 FR 34496 (July 5,1994)—NIH Guidelines for Research Involving Recombinant DNA Molecules.

[NOTE: This policy is subject to change, and interested persons should contact the Office of Recombinant DNA Activities, NIH, Suite 323, 6000 Executive Boulevard, MSA 7010, BETHESDA, MD 20892–7010 (301–496–9838; not a toll-free number) to obtain references to the current version and any amendments.]

Public Health Service Policy on Humane Care and Use of Laboratory Animals, Office for Protection from Research Risks, NIH (Revised September 1986).

[NOTE: This policy is subject to change, and interested persons should contact the Office for Protection from Research Risks, NIH, Suite 3B01, 6100 Executive Boulevard, MSC 7507, Bethesda, MD 20892–7507 (301–496–7005; not a toll-free number) to obtain references to the current version and any amendments.]

[57 FR 61006, Dec. 23, 1992, as amended at 61 FR 55109, Oct. 24, 1996]

§ 52a.9 Additional conditions.

The Director may, with respect to any grant award, impose additional conditions prior to or at the time of any award when in the Director's judgment the conditions are necessary to assure the carrying out of the purposes of the award, the interests of the public health, or the conservation of grant funds.

[61 FR 55110, Oct. 24, 1996]

PART 52b—NATIONAL CANCER INSTITUTE CONSTRUCTION GRANTS

Sec.
52b.1 Applicability.
52b.2 Definitions.
52b.3 Eligibility.
52b.4 Application.
52b.5 Evaluation.
52b.6 Other HHS regulations that apply.
52b.7 Rate of Federal financial participation.
52b.8 Terms and conditions.
52b.9 Acquisition of facilities.
52b.10 Additional conditions.
52b.11 Minimum standards of construction and equipment.

AUTHORITY: Sec. 215, 58 Stat. 690, as amended (42 U.S.C. 216); sec. 406(b), 92 Stat. 3428 (42 U.S.C. 286a); sec. 404(b)(9), 92 Stat. 3427 (42 U.S.C. 285).

SOURCE: 45 FR 12243, Feb. 25, 1980, unless otherwise noted.

§ 52b.1 Applicability.

The provisions of this part apply to award of grants under section 406(b) of the Public Health Service Act for the construction of centers for clinical research, training and demonstration of advanced diagnostic and treatment methods relating to cancer, and to the award of grants under section 404(b)(9) for construction of basic research laboratory facilities.

§ 52b.2 Definitions.

(a) *Act* means the Public Health Service Act, as amended.

(b) *Director* means the Director of the National Cancer Institute and any officer or employee of the National Cancer Institute to whom the authority involved may be delegated.

(c) *Construction grant* means a grant of funds for construction pursuant to sections 406(b) and 404(b)(9) of the Act, and in accordance with these regulations.

(d) *Construction* includes the construction of new buildings; acquisition of land or existing buildings provided such acquisition occurs after the filing of the application; the expansion, remodeling, and alteration of existing buildings provided the cost of such expansion, remodeling, and alteration is not less than $75,000; and the initial equipment of any such buildings; but excludes the cost of off-site improvements.

§ 52b.3 Eligibility.

In order to be eligible for a construction grant under section 406(b) or section 404(b)(9) of the Act, the applicant must be:

(a) A public or private nonprofit agency or institution; and

(b) Located in a State, the District of Columbia, the Commonwealth of Puerto Rico, the Virgin Islands, the Canal Zone, American Samoa, the Trust Territory of the Pacific Islands, or Guam.

§ 52b.4 Application.

(a) *Submittal.* Applications for construction grants under section 406(b) or section 404(b)(9) of the Act, including both detailed narrative descriptions and detailed estimates of the cost of the respective projects, shall be made on an authorized form.

(b) *Environmental impact.* Each applicant shall furnish its analysis of the environmental impact of the proposed construction taking into account the consideration set forth in the National Environmental Policy Act, Pub. L. 91–190 ((42 U.S.C. 4321 *et seq.*), 83 Stat. 852).

(c) *Flood hazards.* Each applicant shall furnish its assessment of the project site in light of the considerations set forth in Executive Order 11296, 31 FR 10663 (August 10, 1966) concerning the evaluation of flood hazards in locating Federally supported facilities.

(d) *Review by State and local comprehensive health planning agency.* In the case of a project for the construction of a facility intended, at least in part, for the provision of health services, the applicant shall provide an opportunity for comment and approval with respect to such project to (1) the

State agency administering or supervising the administration of the State plan approved under section 314(a) of the Act, and (2) the public or nonprofit private agency or organization responsible for the plan or plans referred to in section 314(b) of the Act and covering the area in which such project is to be located or if there is no such agency, such other public or nonprofit private agency or organization (if any) as performs, as determined in accordance with criteria of the Director, similar functions.

(Sec. 215, Public Health Service Act, 58 Stat. 690, 67 Stat. 631 (42 U.S.C. 216); sec. 406(b), Public Health Service Act, 92 Stat. 3428 (42 U.S.C. 286a); sec. 404(b)(9), Public Health Service Act, 92 Stat. 3427 (42 U.S.C. 285))

[45 FR 12243, Feb. 25, 1980, as amended at 48 FR 29201, June 24, 1983; 48 FR 45558, Oct. 6, 1983]

§52b.5 Evaluation.

In approving applications for construction grants under this part, the Director shall take into account, among other factors, the following:

(a) The relevance of the program for which construction is proposed to the objectives and priorities of the National Cancer Program (42 U.S.C. 286a),

(b) The scientific merits of the program for which construction is proposed,

(c) The scientific or professional standing or reputation of the agency or institution and of its existing or proposed officers and research staff,

(d) The availability, by affiliation or other association, of other scientific or health personnel and facilities to the extent necessary to carry out effectively the contemplated program, including the adequacy of an acceptable biohazard control and containment program where warranted,

(e) The need to accomplish appropriate geographical distribution of facilities, and

(f) The financial need of the applicant.

§52b.6 Other HHS regulations that apply.

Several other regulations apply to grants under this subpart. These include, but are not limited to:

42 CFR part 50, subpart D—Public Health Service grant appeals procedure

45 CFR part 16—Procedures of the Departmental Grant Appeals Board

45 CFR part 74—Administration of grants

45 CFR part 75—Informal grant appeals procedures

45 CFR part 80—Nondiscrimination under programs receiving Federal assistance through the Department of Health and Human Services effectuation of title VI of the Civil Rights Act of 1964

45 CFR part 81—Practice and procedure for hearings under part 80 of this title

45 CFR part 84—Nondiscrimination on the basis of handicap in programs and activities receiving or benefiting from Federal financial assistance

45 CFR part 91—Nondiscrimination on the basis of age in HHS programs or activities receiving Federal financial assistance

[49 FR 38110, Sept. 27, 1984]

§52b.7 Rate of Federal financial participation.

(a) The amount of a construction grant may not exceed 75 percent of the necessary allowable cost of construction as determined by the Director, except that in situations where the Director finds good cause for waiving requirements, for example, in order to achieve sufficient geographical distribution of facilities, the amount of the construction grant may exceed 75 percent of the necessary allowable cost of construction.

(b) Subject to paragraph (a) of this section, the Director shall set the actual rate of Federal financial participation in the necessary allowable cost of construction taking into consideration the most effective use of available Federal funds to further the purposes of section 406(b) or section 404(b)(9).

§52b.8 Terms and conditions.

In addition to any other requirement imposed by law or determined by the Director to be reasonably necessary with respect to any particular grant to fulfill the purposes thereof, each construction grant shall be subject to the condition that the applicant provide certain evidences, supported by such documentation as the Director may reasonably require. The Director may for good cause shown approve exceptions to these conditions and evidences

where the Director finds that such exceptions are not inconsistent with the Act and the purposes of the program:

(a) *Title.* That the applicant has a fee simple or such other estate or interest in the site, including necessary easements and rights-of-way sufficient to assure for the estimated useful life of the facility, as determined by the Director, undisturbed use and possession for the purpose of the construction and operation of the facility.

(b) *Plans and specifications.* That approval by the Director of the final working drawings and specifications will be obtained before the project is advertised or placed on the market for bidding and that such approval shall include a determination by the Director that the final plans and specifications conform to the minimum standards of construction and equipment as set forth in § 52b.11 of this part.

(c) *Relocation assistance.* That in the case of a public applicant with an approved project which involves the displacement of persons or businesses on or after January 4, 1971, the applicant will comply with the provisions of the Uniform Relocation Assistance and Real Property Acquisition Policies Act of 1970 ((42 U.S.C. 4601 *et seq.*), 84 Stat. 1984) and the applicable regulations issued thereunder (45 CFR part 15).

(d) *Approval of changes in estimated cost.* That the applicant will not enter into any construction contract or contracts for the project or a part thereof, the cost of which is in excess of the estimated cost approved in the application for that portion of the work covered by the plans and specifications, without the prior approval of the Director.

(e) *Completion responsibility.* That the applicant will construct the project, or cause it to be constructed, to final completion in accordance with the grant application and approved plans and specifications.

(f) *Construction inspection.* That the applicant will provide and maintain competent and adequate architectural or engineering inspection at the construction site to insure that the completed work conforms with the approved plans and specifications.

(g) *Non-Federal share.* That sufficient funds will be available to meet the non-Federal share of the cost of constructing the facility.

(h) *Funds for operation.* That sufficient funds will be available when construction is completed for effective use of the facility for the purposes for which it is being constructed.

(i) *Inspection.* That the Director and the Director's representatives shall have access at all reasonable times to work whereever it is in preparation or progress, and the contractor shall provide proper facilities for such access and inspection.

(j) *Accessibility to handicapped.* That, the facility shall be designed to comply with the Federal Accessibility Standard (41 CFR subpart 101–19.6) as modified by other standards prescribed by the Director or the Administrator of General Services. The applicant will be responsible for conducting inspections to insure compliance with these specifications by the contractor.

(k) *Minimum standards of construction and equipment.* That the plans and specifications for the project will conform to the minimum standards of construction and equipment as set forth in § 52b.11 of this part.

[45 FR 12243, Feb. 25, 1980; 45 FR 20096, Mar. 27, 1980]

§ 52b.9 Acquisition of facilities.

In addition to the other requirements of this part, the following provisions are applicable to the acquisition of existing facilities.

(a) *Minimum standards of construction and equipment.* A determination by the Director that the facility conforms (or upon completion of any necessary construction will conform) to the minimum standards of construction and equipment as set forth in § 52b.11 of this part, shall be obtained before entering into a final or unconditional contract for such acquisition. Where the Director finds that exceptions to or modification of any such minimum standards of construction and equipment would be consistent with the purposes of section 406(b) or section 404(b)(9) of the Act, the Director may authorize such exceptions or modifications;

(b) *Estimated cost of acquisition and remodeling: Suitability of facility.* Each application for a project involving the acquisition of existing facilities shall include in the detailed estimates of the cost of the project, the cost of acquiring such facilities, and any cost of remodeling, renovating or altering such facilities to serve the purposes for which they are acquired. Such application shall demonstrate to the satisfaction of the Director that the architectural, structural and other pertinent features of the facility, as modified by any proposed expansion, remodeling, renovation, or alteration, will be clearly suitable for the purposes of section 406(b) or section 404(b)(9) of the Act, and, to the extent of the costs in which Federal participation is requested, are not in excess of what is necessary for the services proposed to be provided in such facilities;

(c) *Bona fide sale.* Federal participation in the acquisition of existing facilities is on condition that such acquisition constitutes a bona fide sale involving an actual cost to the applicant and will result in additional or improved facilities for purposes of section 406(b) or section 404(b)(9) of the Act; and

(d) *Facility which has previously received Federal grant.* No grant for the acquisition of a facility which has previously received a Federal grant for construction, acquisition, or equipment shall serve either to reduce or restrict the liability of the applicant or any other transferor or transferee from any obligation of accountability imposed by the Federal Government by reason of such prior grant.

[45 FR 12243, Feb. 25, 1980; 45 FR 20096, Mar. 27, 1980]

§ 52b.10 Additional conditions.

The Director may with respect to any grant award impose additional conditions consistent with these regulations prior to or at the time of any award when in the Director's judgment such conditions are necessary to assure or protect advancement of the approved project, the interests of the National Cancer Program, or the conservation of grant funds.

§ 52b.11 Minimum standards of construction and equipment.

The standards set forth in this section have been determined by the Director to constitute minimum requirements for construction and equipment, including remodeling, renovation, or alteration of existing buildings, and shall apply to all projects for which Federal assistance is requested under section 406(b) or section 404(b)(9) of the Act. In accordance with 5 U.S.C. 552(a)(1), the publications to which reference is made in this section, unless otherwise indicated, are hereby incorporated by reference and made a part hereof. These documents are available for inspection at the Department and Regional Offices' Information Centers listed in 45 CFR 5.31 and copies of such documents may be purchased as specified. The Director may for good cause shown approve plans and specifications which contain deviations from the requirements prescribed, if the Director is satisfied that the purposes of such requirements have been fulfilled. In addition to these requirements, it is recognized that each project will have to meet the requirements of State and/or local codes and ordinances relating to construction.

(a) *General.* The structural design, construction, and fire safety provisions of all project facilities shall comply with the standards of the Uniform Building Code (available from International Conference of Building Officials, 5360 South Workman Road, Whittier, CA 90601) or with applicable State or local codes and ordinances, whichever is more restrictive.

(b) *Mechanical.* All installations of fuel burning equipment, steam, heating, air conditioning and ventilation, plumbing and other piping systems, incinerators, and boilers shall comply with the following standards:

(1) Handbook of Fundamentals: American Society of Heating, Refrigerating and Air Conditioning Engineers (ASHRAE), United Engineer Center, 345 East 47th Street, New York, NY 10017.

(2) National Standard Plumbing Code: National Association of Plumbing-Heating-Cooling Contractors, 1016 20th Street NW., Washington, DC 20036.

(3) Standard for Non-Flammable Medical Gas Systems, 1973, NFPA Bulletin No. 56F, National Fire Protection Association, 470 Atlantic Avenue, Boston, MA 02110.

(4) Standard for Medical-Surgical Vacuum Systems in Hospitals, Pamphlet P–2.1: Compressed Gas Association (CGA), 500 Fifth Avenue, New York, NY 10036.

(c) *Fire and safety.* The fire-resistant design criteria for the facility will be governed by the criteria necessary for that portion of the facility which is subject to the most severe usage. Remodeled structures shall be upgraded, in total, unless it is feasible to isolate the improved portion of the building with fire walls and fire doors. Fire-resistant design shall be in accordance with the standards of Life Safety Code, NFPA No. 101, 1973, National Fire Protection Association, 470 Atlantic Avenue, Boston, MA 02110.

(d) *Emergency electrical service.* Fire alarm systems and other electrical service shall conform to the standards as specified in Life Safety Code, NFPA No. 101, 1973, National Fire Protection Association, 470 Atlantic Avenue, Boston, MA 02110.

(e) *Electrical.* All electrical installations and equipment shall be in accordance with State and local codes and applicable sections of National Electric Code, NFPA Bulletin No. 70, 1971, National Fire Protection Association, 470 Atlantic Avenue Boston, MA 02110.

(f) *Radiation protection.* All areas in which X-ray, gamma-ray, beta-ray producing and similar equipment is located shall be protected from radiation in accordance with the standards which are in the Handbook Reports No. 33 and 34: National Council on Radiation Protection (NCRP), P.O. Box 30175, Washington, DC 20008.

(g) *Earthquake.* All facilities shall be designed and constructed in accordance with the standards specified in the Uniform Building Code, 1973, International Conference of Building Officials, 5360 South Workman Mill Road, Whittier, CA 90601, unless more restrictive State and local codes govern.

(h) *Zoning.* State and local codes shall apply.

[45 FR 12243, Feb. 25, 1980; 45 FR 20096, Mar. 27, 1980]

PART 52c—MINORITY BIOMEDICAL RESEARCH SUPPORT PROGRAM

Sec.
52c.1 Applicability.
52c.2 Definitions.
52c.3 Eligibility.
52c.4 Application.
52c.5 Grant awards.
52c.6 Expenditure of grant funds.
52c.7 Other HHS regulations that apply.
52c.8 Additional conditions.

AUTHORITY: 42 U.S.C. 216, 241(a)(3).

SOURCE: 45 FR 12246, Feb. 25, 1980, unless otherwise noted.

§ 52c.1 Applicability.

The regulations in this part apply to grants (under the Minority Biomedical Research Support Program) awarded in accordance with section 301(a)(3) of the Public Health Service (PHS) Act (42 U.S.C. 241(a)(3)) to increase the numbers of ethnic minority faculty, students, and investigators engaged in biomedical research, and to broaden the opportunities for participation in biomedical research of ethnic minority faculty, students, and investigators, by providing general support for biomedical research programs at eligible institutions.

[58 FR 61030, Nov. 19, 1993]

§ 52c.2 Definitions.

As used in this part:

Act means the Public Health Service Act, as amended (42 U.S.C. 201 *et seq.*).

Ethnic minorities includes but is not limited to such groups as Black Americans, Hispanic Americans, Asian/Pacific Islanders, and American Indians/Native Alaskans (Native Americans).

HHS means the Department of Health and Human Services.

Nonprofit as applied to any institution means an institution which is a corporation or association no part of the net earnings of which inures or may lawfully inure to the benefit of any private shareholder or individual.

Program director means a single individual, designated in the grant application, who is scientifically trained and has research experience and who is responsible for the overall execution of the program supported under this part at the grantee institution.

Secretary means the Secretary of Health and Human Services and any other officer or employee of the Department of Health and Human Services to whom the authority involved has been delegated.

[58 FR 61030, Nov. 19, 1993]

§52c.3 Eligibility.

To be eligible for a grant under this Program, an applicant must be:

(a) One of the following:

(1) A public or private nonprofit university, four year college, or other institution offering undergraduate, graduate, or health professional degrees, with a traditionally high (more than 50 percent) minority student enrollment;

(2) A public or private nonprofit two year college with a traditionally high (more than 50 percent) minority student enrollment;

(3) A public or private nonprofit university, four year college, or other institution offering undergraduate, graduate, or health professional degrees, with a student enrollment a significant proportion (but not necessarily more than 50 percent) of which is derived from ethnic minorities, provided the Secretary determines that said institution has a demonstrated commitment to the special encouragement of and assistance to ethnic minority faculty, students, and investigators; or

(4) An Indian tribe which has a recognized governing body which performs substantial governmental functions, or an Alaska Regional Corporation as defined in the Alaska Native Claims Settlement Act (43 U.S.C. 1601 *et seq.*), and

(b) Located in a State, the District of Columbia, Puerto Rico, the Virgin Islands, the Canal Zone, Guam, American Samoa, or the successor States of the Trust Territory of the Pacific Islands (the Federated States of Micronesia, the Republic of the Marshall Islands, and the Republic of Palau).

[45 FR 12246, Feb. 25, 1980; 45 FR 20096, Mar. 27, 1980; 58 FR 61030, Nov. 19, 1993]

§52c.4 Application.

An institution interested in applying for a grant under this part must submit an application at the time and in the form and manner that the Secretary may prescribe.

[58 FR 61030, Nov. 19, 1993]

§52c.5 Grant awards.

(a) Within the limits of funds available, and upon such recommendation as may be required by law, the Secretary shall award grants to those applications with proposed biomedical research programs which will, in the Secretary's judgment, best promote the purposes of this part, taking into consideration among other pertinent factors:

(1) The benefits that can be expected to accrue to the national effort in biomedical research and in increasing the pool of biomedical researchers;

(2) The institution's capability, from a scientific and technical standpoint, to engage in biomedical research;

(3) The benefits that can be expected to accrue to the institution and its students;

(4) The administrative and managerial capability and competence of the applicant;

(5) The availability of the facilities and resources (including where necessary collaborative arrangements with other institutions) to engage in biomedical research;

(6) The applicant's relative need for funding; and

(7) The overall significance of the proposal in terms of numbers of ethnic minority persons benefited thereby.

(b) The notice of grant award specifies how long HHS intends to support the project without requiring the project to recompete for funds. This period, called the project period, will usually be for 1–5 years.

(c) Generally the grant will initially be for one year and subsequent continuation awards will also be for one year at a time. A grantee must submit a separate application to have the support continued for each subsequent year. Decisions regarding continuation awards and the funding level of such awards will be made after consideration of such factors as the grantee's progress and management practices, and the availability of funds. In all cases, continuation awards require a determination by HHS that continued

funding is in the best interest of the government.

(d) Neither the approval of any application nor the award of any grant commits or obligates the United States in any way to make any additional, supplemental, continuation, or other award with respect to any approved application or portion of an approved application.

[45 FR 12246, Feb. 25, 1980; 45 FR 20096, Mar. 27, 1980; 58 FR 61030, Nov. 19, 1993]

§ 52c.6 Expenditure of grant funds.

(a) Any funds granted pursuant to this part shall be expended solely for the purposes for which the funds were granted in accordance with the approved application and budget, the regulations of this part, the terms and conditions of the award, and the applicable cost principles prescribed by subpart Q of 45 CFR part 74.

(b) The Secretary may permit unobligated grant funds remaining in the grant account at the close of a budget period to be carried forward for obligation during a subsequent budget period, provided a continuation award is made for that period and the Secretary's written approval is obtained. The amount of any subsequent award will take into consideration unobligated grant funds remaining in the grant account.

[45 FR 12246, Feb. 25, 1980; 45 FR 20096, Mar. 27, 1980; 45 FR 68392, Oct. 15, 1980]

§ 52c.7 Other HHS regulations that apply.

Several other regulations and policies apply to grants under this part. These include, but are not necessarily limited to:

37 CFR part 401—Rights to inventions made by nonprofit organizations and small business firms under government grants, contracts, and cooperative agreements

42 CFR part 50, subpart A—Responsibilities of PHS awardee and applicant institutions for dealing with and reporting possible misconduct in science

42 CFR part 50, subpart D—Public Health Service grant appeals procedures

45 CFR part 16—Procedures of the Departmental Grant Appeals Board

45 CFR part 46—Protection of human subjects

45 CFR part 74—Administration of grants

45 CFR part 75—Informal grant appeals procedures

45 CFR part 76—Governmentwide debarment and suspension (nonprocurement) and governmentwide requirements for drug-free workplace (grants)

45 CFR part 80—Nondiscrimination under programs receiving Federal assistance through the Department of Health and Human Services Effectuation of Title VI of the Civil Rights Act of 1964

45 CFR part 81—Practice and procedure for hearings under part 80 of this title

45 CFR part 84—Nondiscrimination on the basis of handicap in programs and activities receiving Federal financial assistance

45 CFR part 86—Nondiscrimination on the basis of sex in education programs and activities receiving or benefiting from Federal financial assistance

45 CFR part 91—Nondiscrimination on the basis of age in HHS programs and activities receiving Federal financial assistance

45 CFR part 92—Uniform administrative requirements for grants and cooperative agreements to State and local governments

45 CFR part 93—New restrictions on lobbying

51 FR 16958, or successor—NIH Guidelines for Research Involving Recombinant DNA Molecules

''Public Health Service Policy on Humane Care and Use of Laboratory Animals,'' Office for Protection from Research Risks, NIH (Revised September 1986), or successor

[58 FR 61030, Nov. 19, 1993]

§ 52c.8 Additional conditions.

The Secretary may with respect to any grant award impose additional conditions prior to or at the time of any award when in the Secretary's judgment those conditions are necessary to assure or protect advancement of the approved program, the interests of the public health, or the conservation of grant funds.

PART 52d—NATIONAL CANCER INSTITUTE CLINICAL CANCER EDUCATION PROGRAM

Sec.
52d.1 Applicability.
52d.2 Definitions.
52d.3 Eligibility.
52d.4 Application.
52d.5 Program requirements.

52d.6 Grant awards.
52d.7 Expenditure of grant funds.
52d.8 Other HHS regulations that apply.
52d.9 Additional conditions.

AUTHORITY: Sec. 215, 58 Stat. 690, as amended, 63 Stat. 835 (42 U.S.C. 216); sec. 404(a)(4), 92 Stat. 3426 (42 U.S.C. 285).

SOURCE: 45 FR 12247, Feb. 25, 1980, unless otherwise noted.

§52d.1 Applicability.

The regulations in this part apply to grants under the Clinical Cancer Education Program authorized by section 404(a)(4) of the Public Health Service Act, to encourage planning and development of multidisciplinary educational programs aimed at achieving optimal care of cancer patients and to enable students in the health professions to acquire basic knowledge of neoplastic disease and the preventive measures and diagnostic and therapeutic skills necessary to the provision of such care.

§52d.2 Definitions.

(a) *Act* means the Public Health Service Act, as amended.

(b) *Director, NCI,* means the Director of the National Cancer Institute and any other officer or employee of said Institute to whom the authority involved has been delegated.

(c) [Reserved]

(d) *Board* means the National Cancer Advisory Board established by section 407 of the Act (42 U.S.C. 286b).

(e) *Affiliated teaching hospital* means a hospital which, although not owned by such school, has a written agreement with a school of medicine, osteopathy, dentistry, or public health eligible for assistance under this part, providing for effective control by the school of the teaching in the hospital.

(f) *Specialized cancer institute* means an institution which has as its primary mission the diagnosis, prevention, or treatment of cancer.

[45 FR 12247, Feb. 25, 1980; 45 FR 20096, Mar. 27, 1980, as amended at 47 FR 53012, Nov. 24, 1982]

§52d.3 Eligibility.

To be eligible for a grant under this part, an applicant must be:

(a) A public or private school of medicine, osteopathy, dentistry, or public health, affiliated teaching hospital, or specialized cancer institute; and

(b) Located in a State, the District of Columbia, Puerto Rico, the Virgin Islands, the Canal Zone, Guam, American Samoa, or the Trust Territory of the Pacific Islands.

[45 FR 12247, Feb. 25, 1980, as amended at 47 FR 53012, Nov. 24, 1982]

§52d.4 Application.

(a) Application for a grant under this subpart shall be made on an authorized form.[1] Applicants shall submit completed forms, on or before the dates the Director, NCI, may prescribe.

(b) [Reserved]

(c) In addition to any other pertinent information that the Director, NCI, may require, each application shall set forth in detail:

(1) A program plan defining the objectives of the proposed program and the means by which these objectives would be achieved, including descriptions of:

(i) The general educational level (e.g., pre-doctoral, post-doctoral) of the students to be involved in the program;

(ii) The proposed course of study and its relation to the diagnosis, prevention, control, and treatment of cancer;

(iii) The clinical experiences to be provided to the students;

(iv) Multidisciplinary aspects of the program;

(v) The particular schools or branches within the institution which would have responsibility for individual aspects of the program; and

(vi) The teaching mechanisms to be employed, including specific discussion of those techniques which would be innovative.

(2) The availability of personnel, facilities, and resources needed to carry out the program;

(3) The names, qualifications, and proposed duties of the program director and any staff members who would be responsible for the program, including a description of those duties which would actually be carried out by the program director and those which would be shared with or assigned to others;

[1] Applications and instructions are available from the Division of Cancer Research Resources and Centers, Education Branch, Westwood Building, 5333 Westbard Avenue, Bethesda, MD 20205.

(4) The names and qualifications of proposed members of a cancer education committee which would be established by the applicant to advise it on the planning, organization, operation and evaluation of the program and the specific duties which would be assigned to said committee;

(5) Insofar as necessary, cooperative arrangements with other schools, hospitals, and institutions which would participate in the program;

(6) The proposed project period, a detailed budget for the first budget period including a list of other anticipated sources of support and anticipated total needs for each of the succeeding budget periods of the requested project period, and a justification for the amount of grant funds requested;

(7) Proposed methods for monitoring and evaluating the program; and

(8) A description of how the education and training effort will be sustained upon expiration of the award.

[45 FR 12247, Feb. 25, 1980, as amended at 47 FR 53012, Nov. 24, 1982]

§ 52d.5 Program requirements.

(a) If the program is to be offered at the graduate level, it must be multidisciplinary in scope involving at least two or more clinical or preclinical sciences relating to cancer;

(b) The cancer education committee provided for in the approved application must meet at least four times per year, and must be chaired by the program director.

§ 52d.6 Grant awards.

(a) Within the limits of funds available, after consultation with the Board, the Director, NCI, may award grants to applicants with proposed programs which in the NCI Director's judgment best promote the purposes of this part, taking into consideration among other pertinent factors:

(1) The relevance of the proposed program to the objectives of this part;

(2) The extent to which the program would involve innovative teaching techniques;

(3) The availability of adequate staff, facilities, and resources (including where necessary cooperative arrangements with other institutions or hospitals) to carry out the program;

(4) The qualifications and experience of the program director;

(5) The authority of the program director to ensure that the program is planned with multidisciplinary input and that multidisciplinary aspects of the program are carried out;

(6) The extent to which the cancer education committee is broadly representative of the disciplines concerned with cancer care and teaching and is allowed to participate in the planning, organization, operation, and evaluation of the program;

(7) If the program is to be offered at the pre-doctoral level, the extent to which its objectives are designed to aid students:

(i) To acquire a basic understanding of fundamental principles of cancer biology, epidemiology, detection, diagnosis, prevention, treatment and control;

(ii) To interest students in learning more about cancer; and

(iii) To develop an appreciation of the need for a comprehensive multidisciplinary approach to the care of cancer patients;

(8) The administrative and managerial capability of the applicant;

(9) The reasonableness of the proposed budget in relation to the proposed program;

(10) The adequacy of the methods for monitoring and evaluating the program on a continuing basis; and

(11) The degree to which the application adequately provides for the requirements set forth in § 52d.5.

(b) The notice of grant award specifies how long HHS intends to support the program without requiring the program to recompete for funds. This period, called the project period, will usually be for 1–5 years.

(c) Generally, the grant will initially be for one year and subsequent continuation awards will also be for one year at a time. A grantee must submit a separate application to have the support continued for each subsequent year. Decisions regarding continuation awards and the funding level of such awards will be made after consideration of such factors as the grantee's progress and management practices, and the availability of funds. In all cases, continuation awards require a

determination by HHS that continued funding is in the best interest of the government.

(d) Neither the approval of any application nor the award of any grant commits or obligates the United States in any way to make any additional, supplemental, continuation, or other award with respect to any approved application or portion of an approved application.

§52d.7 Expenditure of grant funds.

(a) Any funds granted pursuant to this part shall be expended solely for the purposes for which the funds were granted in accordance with the approved application and budget, the regulations of this part, the terms and conditions of the awards, and the applicable cost principles prescribed by subpart Q of 45 CFR part 74, except that grant funds may not be used for costs incurred in connection with activities which, prior to the grant, were part of the grantee's standard curriculum.

(b) The Director, NCI, may permit unobligated grant funds remaining in the grant account at the close of a budget period to be carried forward for obligation during a subsequent budget period, provided a continuation award is made for that period and the NCI Director's written approval is obtained. The amount of any subsequent award will take into consideration unobligated grant funds remaining in the grant account.

§52d.8 Other HHS regulations that apply.

Several other regulations apply to grants under this subpart. These include, but are not limited to:

42 CFR part 50, subpart D—Public Health Service grant appeals procedure
45 CFR part 16—Procedures of the Departmental Grant Appeals Board
45 CFR part 74—Administration of grants
45 CFR part 75—Informal grant appeals procedures
45 CFR part 80—Nondiscrimination under programs receiving Federal assistance through the Department of Health and Human Services effectuation of title VI of the Civil Rights Act of 1964
45 CFR part 81—Practice and procedure for hearings under part 80 of this title
45 CFR part 84—Nondiscrimination on the basis of handicap in programs and activities receiving or benefiting from Federal financial assistance
45 CFR part 86—Nondiscrimination on the basis of sex in education programs and activities receiving or benefiting from Federal financial assistance
45 CFR part 91—Nondiscrimination on the basis of age in HHS programs or activities receiving Federal financial assistance

[49 FR 38111, Sept. 27, 1984]

§52d.9 Additional conditions.

The Director, NCI, may with respect to any grant award impose additional conditions prior to or at the time of any award when in the NCI Director's judgment those conditions are necessary to assure or protect advancement of the approved program, the interests of the public health, or the conservation of grant funds.

PART 52e—NATIONAL HEART, LUNG, AND BLOOD INSTITUTE GRANTS FOR PREVENTION AND CONTROL PROJECTS

Sec.
52e.1 To what programs do these regulations apply?
52e.2 Definitions.
52e.3 Who is eligible to apply?
52e.4 How to apply.
52e.5 What are the project requirements?
52e.6 How will NIH evaluate applications?
52e.7 What are the terms and conditions of awards?
52e.8 Other HHS regulations and policies that apply.
52e.9 Additional conditions.

AUTHORITY: 42 U.S.C. 216, 285b–1.

SOURCE: 45 FR 12249, Feb. 25, 1980, unless otherwise noted.

§52e.1 To what programs do these regulations apply?

(a) This part applies to grants under section 419 of the Act (42 U.S.C. 285b–1) for projects to:

(1) Demonstrate and evaluate the effectiveness of new techniques or procedures for the prevention and control of heart, blood vessel, lung, and blood diseases, with special consideration given to the prevention and control of these diseases in children, and in populations that are at increased risk with respect to such diseases;

(2) Develop and evaluate methods of educating health practitioners concerning the prevention and control of these diseases; and

(3) Develop and evaluate methods of educating the public concerning the prevention and control of these diseases.

(b) For purposes of this part, prevention and control projects shall include community-based and population-based programs carried out in cooperation with other Federal agencies, with public health agencies of State or local governments, with nonprofit private entities that are community-based health agencies, or with other appropriate public or nonprofit private entities.

[45 FR 12249, Feb. 25, 1980; 45 FR 20097, Mar. 27, 1980, as amended at 58 FR 54298, Oct. 21, 1993; 59 FR 59372, Nov. 17, 1994]

§ 52e.2 Definitions.

As used in this part:

Act means the Public Health Service Act, as amended (42 U.S.C. 201 et seq.)

Council means the National Heart, Lung, and Blood Advisory Council, established under section 406 of the Act (42 U.S.C. 284a).

Director means the Director of the National Heart, Lung, and Blood Institute and any official to whom the authority involved may be delegated.

Emergency medical services means the services utilized in responding to the perceived individual need for immediate medical care in order to prevent loss of life or aggravation of physiological or psychological illness or injury.

HHS means the Department of Health and Human Services.

National program means the National Heart, Blood Vessel, Lung, and Blood Diseases and Blood Resources Program referred to in section 421 of the Act (42 U.S.C. 285b–3).

Nonprofit as applied to any agency or institution means an agency or institution which is a corporation or an association, no part of the net earnings of which inures or may lawfully inure to the benefit of any private shareholder or individual.

PHS means the Public Health Service.

[58 FR 54298, Oct. 21, 1993]

§ 52e.3 Who is eligible to apply?

To be eligible for a grant under this part, an applicant must be a public or nonprofit private agency or institution.

[45 FR 12249, Feb. 25, 1980, as amended at 58 FR 54298, Oct. 21, 1993]

§ 52e.4 How to apply.

(a) Application for a grant under this subpart shall be made on an authorized form.[2] Applicants shall submit completed forms on or before the dates the Director may prescribe.

(b) Each private institution which does not already have on file with the National Institutes of Health evidence of nonprofit status, must submit with its application acceptable proof of such status.

(c) In addition to any other pertinent information that the Director may require each application shall set forth in detail:

(1) The nature and purpose of the proposed project and the methods to be employed in carrying it out;

(2) The relevance of the proposed project to the National Program;

(3) The defined population to participate in the proposed project and the rationale for its selection;

(4) With respect to applications relating to projects covered by § 52e.1(a)(1), prior research findings on which the proposed project is based;

(5) The personnel, facilities, and other resources, including community resources, available to carry out the proposed project;

(6) Current activities of the applicant involving prevention or control of heart, blood vessel, lung, and blood diseases, the sources of funding for such activities, and the anticipated relationship of these activities to the proposed project;

(7) The names and qualifications of the project director and key staff members who would be responsible for conducting the proposed project;

(8) Proposed methods for monitoring and evaluating the project; and

[2] Applications and instructions are available from the Division of Extramural Affairs, National Heart, Lung, and Blood Institute, National Institutes of Health, 9000 Rockville Pike, Bethesda, MD 20205.

(9) The proposed project period; a detailed budget for the first budget period, including a list of other anticipated sources of support and anticipated total needs for each of the succeeding budget periods of the requested project period; and a justification for the amount of grant funds requested.

[45 FR 12249, Feb. 25, 1980, as amended at 58 FR 54298, Oct. 21, 1993]

§52e.5 What are the project requirements?

(a) An approvable application must demonstrate to the satisfaction of the Director that:

(1) With respect to applications relating to projects covered by §52e.1(a)(1), the techniques or procedures to be demonstrated and evaluated have been found safe and effective in the research setting and, based upon research findings, appear to have the potential for general applicability to the prevention, diagnosis, or treatment of heart, blood vessel, lung, or blood diseases;

(2) With respect to applications relating to projects covered by §52e.1(a)(2) and §52e.1(a)(3), the project will include development and evaluation of one or more methods for educating health practitioners or the public concerning advances in the prevention, diagnosis, or treatment of such diseases; and

(3) The nature of the project is such that its completion may be anticipated within the project period, or such other period as may be specified in the application.

(b) The project must, in the judgment of the Director, be necessary for cooperation by the National Heart, Lung, and Blood Institute with one or more other Federal Health agencies, State, local or regional public health agencies, or nonprofit private health agencies in the diagnosis, prevention, or treatment of heart, blood vessel, lung or blood diseases.

[45 FR 12249, Feb. 25, 1980, as amended at 58 FR 54298 and 54299, Oct. 21, 1993]

§52e.6 How will NIH evaluate applications?

(a) Within the limits of funds available, after consultation with the Council, the Director may award grants to applicants with proposed projects which in the Director's judgment will best promote the purposes of section 419 of the Act, taking into consideration among other pertinent factors:

(1) The scientific and technical merit of the proposed project;

(2) The significance of the project in relation to the goals of the National Program;

(3) Whether the project appropriately emphasizes the prevention, diagnosis, or treatment of heart, blood vessel, lung, or blood diseases of children;

(4) The qualifications and experience of the project director and other key personnel;

(5) The administrative and managerial capability and fiscal responsibility of the applicant;

(6) The reasonableness of the proposed budget in relation to the proposed project;

(7) The adequacy of the methods proposed for monitoring and evaluating the proposed project; and

(8) The degree to which the application adequately provides for the requirements set forth in §§52e.5(a) and 52e.5(b).

(b) The notice of grant award specifies how long HHS intends to support the project without requiring the project to recompete for funds. This period, called the project period, will usually be for 1–5 years.

(c) Generally, the grant will initially be for one year and subsequent continuation awards will also be for one year at a time. A grantee must submit a separate application to have the support continued for each subsequent year. Decisions regarding continuation awards and the funding level of such awards will be made after consideration of such factors as the grantee's progress and management practices, and the availability of funds. In all cases, continuation awards require a determination by HHS that continued funding is in the best interest of the government.

(d) Neither the approval of any application nor the award of any grant commits or obligates the United States in any way to make any additional, supplemental, continuation, or other award with respect to any approved application or portion of an approved application.

(e) Any funds granted under this part shall be expended solely for the purposes for which the funds were granted in accordance with the approved application and budget, the regulations of this part, the terms, and conditions of the award, and the applicable cost principles prescribed in subpart Q of 45 CFR part 74.

[45 FR 12249, Feb. 25, 1980, as amended at 58 FR 54298, Oct. 21, 1993]

§ 52e.7 What are the terms and conditions of awards?

(a) Any funds granted pursuant to this part shall be expended solely for the purposes for which the funds were granted in accordance with the approved application and budget, the regulations of this part, the terms and conditions of the award, and the applicable cost principles prescribed by subpart Q of 45 CFR part 74.

(b) The Director may permit unobligated grant funds remaining in the grant account at the close of a budget period to be carried forward for obligation during a subsequent budget period, provided a continuation award is made for that period and the NHLBI Director's written approval is obtained. The amount of any subsequent award will take into consideration unobligated grant funds remaining in the grant account.

[45 FR 12249, Feb. 25, 1980, as amended at 58 FR 54298 and 54299, Oct. 21, 1993]

§ 52e.8 Other HHS regulations and policies that apply.

Several other regulations apply to grants under this part. These include but are not necessarily limited to:

42 CFR part 50, subpart A—Responsibility of PHS awardee and applicant institutions for dealing with and reporting possible misconduct in science
42 CFR part 50, subpart D—Public Health Service grant appeals procedure
45 CFR part 16—Procedures of the Departmental Grant Appeals Board
45 CFR part 46—Protection of human subjects
45 CFR part 74—Administration of grants
45 CFR part 75—Informal grant appeals procedures
45 CFR part 76—Governmentwide debarment and suspension (nonprocurement) and governmentwide requirements for drug-free workplace (grants)
45 CFR part 80—Nondiscrimination under programs receiving Federal assistance through the Department of Health and Human Services—Effectuation of Title VI of the Civil Rights Act of 1964
45 CFR part 81—Practice and procedure for hearings under part 80 of this title
45 CFR part 84—Nondiscrimination on the basis of handicap in programs and activities receiving or benefiting from Federal financial assistance
45 CFR part 86—Nondiscrimination on the basis of sex in education programs and activities receiving or benefiting from Federal financial assistance
45 CFR part 91—Nondiscrimination on the basis of age in HHS programs or activities receiving Federal financial assistance
45 CFR part 92—Uniform administrative requirements for grants and cooperative agreements to State and local governments
45 CFR part 93—New restrictions on lobbying
51 FR 16958 or successor—NIH Guidelines for Research Involving Recombinant DNA Molecules
''Public Health Service Policy on Humane Care and Use of Laboratory Animals,'' Office for Protection from Research Risks, NIH (Revised September 1986), or successor
59 FR 14508 (as republished March 28, 1994), as may be amended, or its successor—NIH Guidelines on the Inclusion of Women and Minorities as Subjects in Clinical Research.

[58 FR 54298, Oct. 21, 1993, as amended at 59 FR 59372, Nov. 17, 1994]

§ 52e.9 Additional conditions.

The Director, may with respect to any grant award impose additional conditions prior to or at the time of any award when in the Director's judgment those conditions are necessary to assure or protect advancement of the approved project, the interests of the public health, or the conservation of grant funds.

[45 FR 12249, Feb. 25, 1980, as amended at 58 FR 54299, Oct. 21, 1993]

PART 52h—SCIENTIFIC PEER REVIEW OF RESEARCH GRANT APPLICATIONS AND RESEARCH AND DEVELOPMENT CONTRACT PROJECTS

Sec.
52h.1 Applicability.
52h.2 Definitions.
52h.3 Establishment and operation of peer review groups.

52h.4 Composition of peer review groups.
52h.5 Conflict of interest.
52h.6 Availability of information.
52h.7 Grants; matters to be reviewed.
52h.8 Grants; review criteria.
52h.9 Unsolicited contract proposals; matters to be reviewed.
52h.10 Contract projects involving solicited contract proposals; matters to be reviewed.
52h.11 Contract projects and proposals; review criteria.
52h.12 Applicability of other regulations.

AUTHORITY: Sec. 215, 58 Stat. 690, as amended (42 U.S.C. 216); sec. 475, 88 Stat. 360, 89 Stat. 351 (42 U.S.C. 289*l*–4); sec. 955(a), Pub. L. 97–35, 95 Stat. 590 (42 U.S.C. 300z–7(e)).

SOURCE: 43 FR 7862, Feb. 24, 1978, unless otherwise noted.

§52h.1 Applicability.

The regulations in this part apply to:

(a) Applications for grants for biomedical and behavioral research, under the Act to the National Institutes of Health; the Alcohol, Drug Abuse, and Mental Health Administration; or any of their components; or the Division of Nursing, Bureau of Health Professions, Health Resources and Services Administration. These regulations do not apply to applications for:

(1) Continuation funding for budget periods within an approved project period;

(2) Supplemental funding to meet increased administrative costs within a project period; or

(3) Construction grants.

(b) Biomedical and behavorial research and development contract projects administered by the National Institutes of Health; the Alcohol, Drug Abuse, and Mental Health Administration; or any of their components; or the Division of Nursing, Bureau of Health Professions, Health Resources and Services Administration.

(c) Applications for grants and contracts under section 2008 of the Act.

(Sec. 215, 58 Stat. 690, as amended (42 U.S.C. 216); sec. 475, 88 Stat. 360, 89 Stat. 351, 92 Stat. 3436 (42 U.S.C. 289*l*–4))

[45 FR 35328, May 27, 1980, as amended at 47 FR 50261, Nov. 5, 1982; 49 FR 38111, Sept. 27, 1984]

§52h.2 Definitions.

As used in this part:

(a) *Act* means the Public Health Service Act, as amended.

(b) *Project period* has the same meaning as in 42 CFR part 52.

(c) *Budget period* means the interval of time (usually 12 months) into which the project period is divided for budgetary and reporting purposes.

(d) *Awarding official* means the Secretary of Health and Human Services and any other officer or employee of the Department of Health and Human Services to whom the authority involved has been delegated; *Except that,* where the Act specifically authorizes another official to make awards in connection with a particular program, the ''awarding official'' shall mean said other official and any other officer or employee of the Department of Health and Human Services to whom the authority involved has been delegated.

(e) *Peer review group* means a group of experts qualified by training and experience in particular scientific or technical fields to give expert advice, in accordance with the provisions of this part, on the scientific and technical merit of grant applications or contract projects in those fields.

(f) *Research* means systematic study directed toward new or fuller knowledge and understanding of the subject studied.

(g) *Development* means the systematic use of knowledge and understanding gained from research, directed toward creating useful materials, devices, systems, or methods.

(h) *Research and development contract project* means an identified, circumscribed activity, involving a single contract or two or more similar, related, or interdependent contracts, intended and designed to acquire new or fuller knowledge and understanding of a subject and/or to use such knowledge and understanding to develop useful materials, devices, systems, or methods. The terms include (but are not limited to) development and utilization of resources, testing, demonstrations, clinical trials, preparation of reports, and production of experimental or test models necessary or incidental to a research and/or development activity, but exclude quantity production and routine product testing and quality control.

(i) *Project concept* means the basic purpose, scope, and objectives of the project.

(j) *Project approach* means the methodology to be followed and the resources needed in carrying out the project.

(k) *Contract proposal* means a written offer to enter into a contract, submitted to an awarding official by an individual or non-Federal organization, and including as a minimum a description of the nature, purpose, duration, and cost of the project and the methods, personnel, and facilities to be utilized in carrying it out.

(l) *Solicited contract proposal* has the same meaning as in 41 CFR 3–1.353(b)(2).

(m) *Unsolicited contract proposal* has the same meaning as in 41 CFR 3–4.5201.

(n) *Request for proposals* means a Government solicitation to prospective offerors, under procedures for negotiated contracts, to submit a proposal to fulfill specific agency requirements based on terms and conditions defined in the request for proposals. The request for proposals contains information sufficient to enable all offerors to prepare competitive proposals, and is as complete as possible with respect to: Nature of work to be performed; descriptions and specifications of items to be delivered; performance schedule; special requirements clauses, or other circumstances affecting the contract; format for cost proposals; and evaluation criteria by which the proposals will be evaluated.

§ 52h.3 Establishment and operation of peer review groups.

(a) To the extent applicable, the Federal Advisory Committee Act (5 U.S.C. App. I), Department of Health and Human Services (45 CFR part 11), implementing regulations and chapter 9 of the Department of Health and Human Services General Administration Manual[1] will govern the establishment and operation of peer review groups, including that meetings shall be open to the public except as determined by the Secretary.

(b) Subject to § 52h.5 and paragraph (a) of this section, the Director of the National Institutes of Health, the Administrator of the Alcohol, Drug Abuse and Mental Health Administration, and the Administrator of the Health Resources and Services Administration will adopt procedures for the conduct of reviews and the formulation of recommendations under §§ 52h.7, 52h.9 and 52h.10 within their respective agencies.

(Sec. 215, 58 Stat. 690, as amended (42 U.S.C. 216); sec. 475, 88 Stat. 360, 89 Stat. 351, 92 Stat. 3436 (42 U.S.C. 289*l*–4))

[43 FR 7862, Feb. 24, 1978, as amended at 45 FR 35328, May 27, 1980; 49 FR 38111, Sept. 27, 1984]

§ 52h.4 Composition of peer review groups.

(a) To the extent applicable, the selection and appointment of members of peer review groups and their terms of service will be governed by Chapter 9 of the Department of Health and Human Services General Administration Manual.[1]

(b) Subject to paragraph (a) of this section, members will be selected based upon their training and experience in relevant scientific or technical fields, taking into account, among other factors:

(1) The level of formal scientific or technical education completed or experience acquired by the individual;

(2) The extent to which the individual has engaged in relevant research, the capacities (e.g., principal investigator, assistant) in which the individual has done so, and the quality of such research;

(3) Recognition as reflected by awards and other honors received from scientific and professional organizations outside the Department of Health and Human Services; and

(4) The need for the group to have included within its membership experts from various areas of specialization within relevant scientific or technical fields.

(c) Not more than one-fourth of the members of any peer review group to which these regulations are applicable

[1] The Department of Health and Human Services General Administration Manual is available for public inspection and copying at the Department's and Regional Offices' information centers listed in 45 CFR 5.31 and may be purchased from the Superintendent of Documents, U.S. Printing Office, Washington, DC 20402.

may be officers or employees of the United States. For purposes of the preceding sentence, membership on such groups does not make an individual an officer or employee of the United States.

§52h.5 Conflict of interest.

(a) Members of peer review groups covered by this part are subject to relevant provisions in title 18 of the United States Code, relating to criminal activity, the Department of Health and Human Services Standards of Conduct (45 CFR part 73), and Executive Order 11222, as amended.

(b) In addition to any restrictions imposed under paragraph (a) of this section:

(1) No member of a peer review group may participate in or be present during any review by said group of a grant application, contract project, or contract proposal in which, to the member's knowledge, any of the following has a financial interest: (i) The member or his or her spouse, parent, child, or partner, (ii) any organization in which the member or his or her spouse, parent, child, or partner is serving as an officer, director, trustee, partner, or employee, or is otherwise similarly associated, or (iii) any organization with which the member or his or her spouse, parent, child, or partner is negotiating or has any arrangement concerning prospective employment or other similar association.

(2) In the event any member of a peer review group or his or her spouse, parent, child, or partner is currently or expected to be the principal investigator or member of the staff responsible for carrying out any research or development activities contemplated as part of a grant application, contract project, or contract proposal, that group is disqualified and the review will be conducted by another group with the expertise to do so. If there is no other group with the requisite expertise, the review will be conducted by an ad hoc group no more than 50 percent of whose members may be from the disqualified group. The composition of any such ad hoc group will be determined in accordance with §52h.4(b) and §52h.4(c) of this part and, to the extent feasible, §52h.4(a) of this part.

(3) Where a member of a peer review group participates in or is present during:

(i) Development or review of a project approach or request for proposals by said group or

(ii) Review by said group under §52h.10(b) or §52h.10(c), i.e. after the issuance of a request for proposals, no contract may thereafter be awarded as the result of such development or review to said member, his or her spouse, parent, child, or partner or any organization in which the member, his or her spouse, parent, child, or partner was serving as officer, director, trustee, partner, or employee at the time of such development or review or with which the member, his or her spouse, parent, child, or partner was negotiating or had any arrangement concerning prospective employment at said time.

(4) No member of a peer review group may participate in any review under this part of a specific grant application or contract project for which the member has had or is expected to have any other responsibility or involvement (whether preaward or postaward) as an officer or employee of the United States.

(c) Where permissible under the statutes, standards, and order cited in paragraph (a) of this section, the Director of the National Institutes of Health, the Administrator of the Alcohol, Drug Abuse, and Mental Health Administration, the Administrator of the Health Resources and Services Administration, or their designees may waive the requirements in paragraph (b) of this section if he or she determines that there is no other practical means for securing appropriate expert advice on a particular grant application, contract project, or contract proposal.

(Sec. 215, 58 Stat. 690, as amended (42 U.S.C. 216); sec. 475, 88 Stat. 360, 89 Stat. 315, 92 Stat. 3436 (42 U.S.C. 289*l*–4))

[43 FR 7862, Feb. 24, 1978, as amended at 45 FR 35328, May 27, 1980; 49 FR 38111, Sept. 27, 1984]

§ 52h.6 Availability of information.

Transcripts, minutes, and other documents made available to or prepared for or by a peer review group will be available for public inspection and copying to the extent provided in the Freedom of Information Act (5 U.S.C. 552), the Federal Advisory Committee Act (5 U.S.C. App. I), the Privacy Act (5 U.S.C. 552a), and implementing Department of Health and Human Services regulations (45 CFR parts 5, 5b).

§ 52h.7 Grants; matters to be reviewed.

(a) No awarding official will make a grant based upon an application covered by this part unless the application has been reviewed by a peer review group in accordance with the provisions of this part and said group has made recommendations concerning the scientific merit of such application. In addition, where under applicable law an awarding official is required to secure the approval or advice of a national advisory council or board concerning an application, said application will not be considered by the council or board unless it has been reviewed by a peer review group in accordance with the provisions of this part and said group has made recommendations concerning the scientific merit of the application except where the council or board is the peer review group.

(b) Except to the extent otherwise provided for by law, such recommendations are advisory only and not binding on the awarding official or national advisory council or board.

§ 52h.8 Grants; review criteria.

In carrying out its review under § 52h.7, the peer review group will take into account, among other factors:

(a) The significance and originality from a scientific or technical standpoint of the goals of the proposed research;

(b) The adequacy of the methodology proposed to carry out the research;

(c) The qualifications and experience of the principal investigator and proposed staff;

(d) The reasonable availability of resources necessary to the research;

(e) The reasonableness of the proposed budget and duration in relation to the proposed research; and

(f) Where an application involves activities which could have an adverse effect upon humans, animals, or the environment, the adequacy of the proposed means for protecting against or minimizing such effects.

§ 52h.9 Unsolicited contract proposals; matters to be reviewed.

(a) No awarding official will award a contract based upon an unsolicited contract proposal covered by this part unless the proposal has been reviewed by a peer review group in accordance with the provisions of this part (pursuant to procedures set forth in 41 CFR subpart 3–4.52) and said group has made recommendations concerning the scientific merit of such proposal.

(b) Except to the extent otherwise provided for by law, such recommendations are advisory only and not binding on the awarding official.

§ 52h.10 Contract projects involving solicited contract proposals; matters to be reviewed.

(a) Subject to paragraph (b) of this section, no awarding official will issue a request for contract proposals with respect to a contract project involving solicited contract proposals unless the project concept has been reviewed by a peer review group in accordance with the provisions of this part and said group has made recommendations concerning the scientific merit of said concept. Where in the judgment of the awarding official the project approach has been sufficiently well defined by the time the review required by the preceding sentence is conducted, this review and the resulting recommendations shall include the project approach as well.

(b) The awarding official may waive the requirements of paragraph (a) of this section for peer review before issuing a request for contract proposals if he determines that the accomplishments of essential program objectives would otherwise be placed in jeopardy and any further delay would clearly not be in the best interest of the Government. The awarding official shall specify in writing the grounds on which this determination is based. Under such circumstances, the awarding official will not award a contract based on

the request for contract proposals unless the proposals received in response to the request have been reviewed by a peer review group and that group has made recommendations concerning the scientific merit of the project concept and of the approaches outlined in the proposals. The request for proposals will indicate that the project concept has not been reviewed by a peer review group and that no award will be made until such review is conducted and recommendations made based on such review.

(c) The Director of the National Institutes of Health, the Administrator of the Alcohol, Drug Abuse and Mental Health Administration, the Administrator of the Health Resources and Service Administration, or their designees may identify individual contracts or classes of contracts which may not be awarded unless all pertinent contract proposals have been reviewed by a peer review group in accordance with the provisions of this part and that group has made recommendations concerning the scientific merit of the proposals.

(d) Except to the extent otherwise provided for by law, such recommendations are advisory only and not binding on the awarding official.

(Sec. 215, Public Health Service Act, 58 Stat. 690, as amended (42 U.S.C. 216); sec. 475, Public Health Service Act, 88 Stat. 360, 89 Stat. 351, 92 Stat. 3436 (42 U.S.C. 2891–4); sec. 955(a), Pub. L. 97–35, 95 Stat. 590 (42 U.S.C. 300z–7(e)))

[43 FR 7862, Feb. 24, 1978, as amended at 45 FR 35328, May 27, 1980; 49 FR 38111, Sept. 27, 1984]

§ 52h.11 Contract projects and proposals; review criteria.

(a) In carrying out its review of a project concept under § 52h.10(a) or § 52h.10(b), the peer review group will take into account, among other factors:

(1) The significance from a scientific or technical standpoint of the goals of the proposed research or development activity;

(2) The availability of the technology and other resources necessary to achieve these goals;

(3) The extent to which there are identified, practical uses for the anticipated results of the activity; and

(4) Where the review includes the project approach, the adequacy of the methodology to be utilized in carrying out the activity.

(b) In carrying out its review of unsolicited contract proposals under § 52h.9, the peer review group will take into account, among other factors, those criteria in § 52h.8 which are relevant to the particular proposals.

(c) In carrying out its review of solicited contract proposals under § 52h.10(c) the peer review group will evaluate each proposal in accordance with the criteria set forth in the request for proposals.

§ 52h.12 Applicability of other regulations.

The regulations in this part are in addition to, and do not supersede other regulations concerning grant applications, contract projects, or contract proposals appearing elsewhere in this title, title 41, or title 45 of the Code of Federal Regulations.

PART 53—GRANTS, LOANS AND LOAN GUARANTEES FOR CONSTRUCTION AND MODERNIZATION OF HOSPITALS AND MEDICAL FACILITIES

Subparts A–K [Reserved]

Subpart L—Services for Persons Unable to Pay; Community Service; Nondiscrimination

Sec.
53.111 Services for persons unable to pay.
53.112 Nondiscrimination.
53.113 Community service.

Subpart M [Reserved]

Subpart N—Loan Guarantees and Direct Loans

53.154 Waiver of right of recovery.
53.155 Modification of loans.
53.156 Fees for modification requests.

AUTHORITY: Secs. 215, 603, 609, 621, 623, Public Health Service Act as amended, 58 Stat. 690, 78 Stat. 451 and 456, 84 Stat. 344 and 346 (42 U.S.C. 216, 291c, 291i, 291j–1 and 291j–3; 31 U.S.C. 9701).

Subparts A–K [Reserved]

Subpart L—Services for Persons Unable to Pay; Community Service; Nondiscrimination.

§ 53.111 Services for persons unable to pay.

(a) *Applicability.* The provisions of this section apply to every applicant which heretofore has given or hereafter will give an assurance that it will make available a reasonable volume of services to persons unable to pay therefor but shall not apply to an applicant (1) for more than 20 years after the completion of construction of any facility with respect to which funds have been paid under section 606 of the Act or (2) beyond the period during which any amount of a direct loan made under sections 610 or 623 of the Act, or any amount of a loan with respect to which a loan guarantee and interest subsidy has been provided under sections 623 and 624 of the Act remains unpaid.

(b) *Definitions.* As used in this section:

(1) The term *facility* includes hospitals, facilities for long-term care, outpatient facilities, rehabilitation facilities, and public health centers;

(2) The term *applicant* means an applicant for, or recipient of, a grant, a loan guarantee or a loan under the Act;

(3) *Fiscal year* means the fiscal year of the applicant;

(4) The term *operating costs* means the actual operating costs of the applicant for a fiscal year as determined in accordance with cost determination principles and requirements under title XVIII of the Social Security Act (42 U.S.C. 1395): *Provided,* That such ''operating costs'' shall be determined for the applicant's entire facility and for all patients regardless of the source of payment for such care: *And provided further,* That in determining such operating costs there shall be deducted the amount of all actual or estimated reimbursements, as applicable, for services received or to be received pursuant to title XVIII and XIX of the Social Security Act (42 U.S.C. 1395 and 1936);

(5) The term *reasonable cost* means the cost of providing services to a specific patient determined in accordance with the cost determination principles and requirements under title XVIII of the Social Security Act (42 U.S.C. 1395) and subpart D of the regulations thereunder (20 CFR part 405,[1] part 401 *et seq.*);

(6) The term *uncompensated services* means services which are made available to persons unable to pay therefor without charge or at a charge which is less than the reasonable cost of such services. The level of such services is measured by the difference between the amount charged such persons for such services and the reasonable cost thereof;

(7) *Reasonable volume of services to persons unable to pay therefor* means a level of uncompensated services which meets a need for such services in the area served by an applicant and which is within the financial ability of such applicant to provide.

(c) *Assurance.* (1) Before an application under this part is recommended by a State agency to the Secretary for approval, the State agency shall obtain an assurance from the applicant that there will be made available in the facility or portion thereof to be constructed or modernized a reasonable volume of services to persons unable to pay therefor. The requirement of an assurance from an applicant shall be waived if the applicant demonstrates to the satisfaction of the State agency, subject to subsequent approval by the Secretary, that such a requirement is not feasible from a financial viewpoint.

(2) Prior to recommending that such requirement be waived, the State agency shall publish in a newspaper of general circulation in the area served by the applicant a notice of the request for such waiver and invite public comment thereon, allowing not less than 30 days therefor. All comments received shall be available for public inspection, and shall be considered by the State agency in arriving at its recommendation. Notice of the determination on the request for waiver shall be given to all interested persons and to the public before the approval of the Secretary is sought.

(d) *Presumptive compliance guideline.* An applicant which, for a fiscal year, (1) budgets for the support of, and

[1] Redesignated as 42 CFR part 405 at 42 FR 52826, Sept. 30, 1977.

makes available on request, uncompensated services at a level not less than the lesser of 3 percent of operating costs or 10 percent of all Federal assistance provided to or on behalf of the applicant under the Act, or (2) certifies that it will not exclude any person from admission on the ground that such person is unable to pay for needed services and that it will make available to each person so admitted services provided by the facility without charge or at a charge below reasonable cost which does not exceed any such person's ability to pay therefor as determined in accordance with criteria established pursuant to paragraph (g), shall be deemed in presumptive compliance with its assurance. In the case of a loan guarantee with interest subsidy or a direct loan guarantee be sold by the Secretary with an interest subsidy, the amount of Federal assistance shall include the total amount of the interest subsidy which the Secretary is, or will be, obligated to pay over the full life of the loan, as well as any other payments which the Secretary makes on behalf of the applicant in connection with the loan guarantee or the direct loan which has been sold.

(e) *Compliance reports.* (1) Each applicant shall, not later than 120 days after the end of a fiscal year, unless a longer period is approved by the State agency for good cause shown, file with the State agency a copy of its annual statement for such year as required by section 646 of the Act and §53.128(q), which shall set forth its operating costs.

(2) With respect to each fiscal year for which a level of uncompensated services has been established in accordance with this section, the annual statement shall also set forth the amount of uncompensated services provided in such year.

(i) The provision of a level of uncompensated services in such year which equals or exceeds the level established pursuant to paragraph (h) of this section for such year shall constitute compliance with the assurance.

(ii) If the level of services provided was less than the level of uncompensated services established pursuant to paragraph (h) of this section, the applicant shall submit with such statement: A justification therefor, showing that the provision of such lower level of uncompensated services was reasonable under the circumstances; and a description of the steps it proposes to take to assure the availability and utilization of the level of uncompensated services to be established for the current fiscal year, which shall include an affirmative action plan, utilizing press releases or other appropriate means as the facility may desire to bring to the attention of the public the availability of such uncompensated services and the conditions of eligibility therefor.

(3) Each applicant shall file with its annual statement a copy of that portion of its adopted budget for the current fiscal year relating to the support of uncompensated services in such year. Such budget for uncompensated services shall be based on the operating costs of the applicant for the preceding fiscal year and shall give due cognizance to probable increases in operating costs. Except in the case of a certification pursuant to paragraph (d)(2) of this section, if the budget statement does not conform to the presumptive compliance guideline, the applicant shall submit with its statement.

(i) A justification therefor, showing that such lower level of uncompensated services is reasonable under the circumstances, and

(ii) A plan to increase such uncompensated services to meet the presumptive compliance guideline or such other level of uncompensated services as may have been established or as it requests the State agency to establish in accordance with paragraph (h) of this section.

(4) The applicant shall also submit such additional reports related to compliance with its assurance as the State agency may reasonably require.

(5) Pending the establishment of a level of uncompensated services for any fiscal year pursuant to paragraph (h) of this section, the applicant shall, in such fiscal year, provide a level of services which is the higher of

(i) The level established for the preceding fiscal year (or if no such level has been established for such prior year, the level of services provided in such year) or

(ii) The level proposed in its adopted budget for the current fiscal year.

(f) *Qualifying services.* (1) In determining the amount of uncompensated services provided by an applicant, there shall be included only those services provided to an individual with respect to whom the applicant has made a written determination prior to the provision of such services that such individual is unable to pay therefor under the criteria established pursuant to 42 CFR 53.111(g), except that:

(i) Such determination may be made after the provision of such services in the case of services provided on an emergency basis: *Provided,* That when billing is made for such service, such billing must be accompanied by substantially the information required in the posted notice under paragraph (i) of this section; and

(ii) Such determination may be made after the provision of such services in the case of a change in circumstances as a result of the illness or injury occasioning such services (e.g., the patient's financial condition has changed due to a loss of wages resulting from the illness) or in case of insurance coverage or other resources being less than anticipated or the costs of services being greater than anticipated. *Further,* in all cases where such determination was not made prior to the provision of services, such services may not be included as uncompensated services if any collection effort has been made other than the rendering of bills permissible in the above exceptions: *Provided,* That such a determination may be made at any time if the determination was hindered or delayed by reason of erroneous or incomplete information furnished by or in behalf of the patient.

(2) There shall be excluded from the computation of uncompensated services:

(i) Any amount which the applicant has received, or is entitled to receive, from a third party insurer or under a governmental program; and

(ii) The reasonable cost of any services for which payment in whole or in part would be available under a governmental program (e.g., Medicare and Medicaid) in which the applicant, although eligible to do so, does not participate, but only to the extent of such otherwise available payment.

(g) *Persons unable to pay for services.* (1) The State agency shall set forth in its State plan, subject to approval by the Secretary, criteria for identifying persons unable to pay for services, which shall include persons who are otherwise self-supporting but unable to pay the full charge for needed services. Such criteria shall be based on the following or similar factors:

(i) The health and medical care insurance coverage, personal or family income, the size of the patient's family, and other financial obligations and resources of the patient or the family in relation to the reasonable cost of the services;

(ii) Generally recognized standards of need such as:

(*a*) The State standard for the medically needy as determined for the purposes of the Aid for Families with Dependent Children program;

(*b*) The current Social Security Administration poverty income level;

(*c*) The current Office of Economic Opportunity Income Poverty Guidelines applicable in the area; or

(iii) Any other equivalent measures which are found by the Secretary to provide a reasonable basis for determining an individual's ability to pay for medical and hospital services.

(2) A copy of such criteria shall be provided by the applicant, upon request, to any patient or former patient of the applicant and to any person seeking services from the applicant.

(3) The State agency shall provide a copy of such criteria to any person requesting it.

(h) *Level of uncompensated services.* (1) The State agency shall set forth in its State plan procedures for the determination for each applicant of the level of uncompensated services which constitutes a reasonable volume of services to persons unable to pay therefor provided that in no event shall the level of uncompensated services established under this section exceed the presumptive compliance guideline.

(2) The State agency shall for the purpose of making such determination, review, and evaluate the annual statement, the budget and the related documents submitted by each applicant

pursuant to paragraph (e) of this section, by applying the following criteria:

(i) The financial status of the applicant, taking account of income from all sources, and its financial ability to provide uncompensated services;

(ii) The nature and quantity of services provided by the applicant;

(iii) The need within the area served by the applicant for the provision, without charge or at charge which is less than reasonable cost, for services of the nature provided or to be provided by the applicant; and

(iv) The extent and nature of joint or cooperative programs with other facilities for the provision of uncompensated services, and the extent and nature of outreach services directed to the needs of underserved areas.

(3) In accordance with its findings made after such review and evaluation, the State agency shall, within 60 days after receipt of the annual statement and related documents required by paragraph (e) of this section, for each fiscal year of an applicant which begins following the expiration of 90 days after the effective date of this regulation:

(i) Establish a level of uncompensated services for each applicant which may be equal to or less than the presumptive compliance guideline: *Provided,* That if the State agency determines, in accordance with paragraph (h)(2) of this section, that (*a*) there is a need in the area served by an applicant for a level of uncompensated services greater than the level proposed in the applicant's budget statement, and (*b*) the applicant is financially able to provide such greater level of uncompensated services, the State agency shall establish such greater level as the level applicable to the applicant; and

(ii) Accept or modify a plan submitted pursuant to paragraph (e) of this section.

(4) The State agency shall notify the applicant in writing of the level of uncompensated services which it has established for the applicant for the fiscal year. At the time of notifying the applicant, the State agency shall also publish as a public notice in a newspaper of general circulation within the community served by the applicant the rate that has been established and a statement that the documents upon which the agency based its determination are available for public inspection at a location and time prescribed. In the case of the establishment by the State agency of a rate which is less than the presumptive compliance guideline, such notice shall also include a statement that persons wishing to object to the rate established may do so by writing to the State agency within 20 days after publication of the notice: *Provided,* That the applicant may object to any level established which is greater than the level proposed in the applicant's budget statement.

(5) In accordance with the provisions of paragraph (h)(4) of this section, the applicant or any person or persons residing or located within the area served by the applicant, or any organization on behalf of such person or persons, may submit to the State agency within 20 days of the publication and sending of the notice objections to the rate established by the State agency for the applicant. Such objections may be supported in writing by factual information and argument. The State agency shall give public notice of receipt of the objections and shall make the objections and their supporting documents available for public inspection and comment. It may, if it believes that determination of the objections will be assisted by oral evidence or by oral argument, set a public hearing on the objections and shall give notice of such hearing to all interested parties and to the public. The State agency shall within 60 days of the expiration of the period within which objections may be filed, rule upon the objections in writing, stating its reason for sustaining or overruling them, in whole or in part, and establishing finally the rate of uncompensated services either the same as, above, or below the rate previously established, as may best accord with all of the evidence on file with or heard by the State agency. Notice of the final determination shall be mailed to all parties who filed objections or who participated in the proceedings leading to the redetermination.

(6) Within 20 days of receipt of written notice of the final determination of a State agency after ruling on objections to the rate established by the State agency, the applicant or any other interested person or organization may submit to the Secretary a written request for review of the State agency determination. Such review shall be made upon the record of the State agency determination which shall be sustained if supported by substantial evidence and is not otherwise arbitrary or capricious. If the Secretary or his designee determines that the rate established by the State agency is unsupported by the evidence in the record or is otherwise arbitrary or capricious, the Secretary or his designee shall, upon the basis of the record or upon other evidence or information which is before him or which he may obtain, establish a level of uncompensated services which he determines, in accordance with the criteria set out in paragraph (h)(2) of this section, is appropriate.

(7) The level of uncompensated services established for an applicant under this section for any fiscal year shall constitute a reasonable volume of services to persons unable to pay therefor with respect to such applicant for such fiscal year.

(i) *Posted notice.* The applicant shall post notice (which shall be multilingual where the applicant serves a multilingual community), in substantially the following form, in appropriate areas within the facility (admissions, office, emergency department and business office) for the purpose of informing patients or potential patients that criteria for eligibility and applications are available upon request:

NOTICE OF HILL-BURTON OBLIGATION

This hospital (or other facility) is required by law to give a a reasonable amount of service at no cost or less than full cost to people who cannot pay. If you think that you are eligible for these services, please contact our business office (give office location) and ask for assistance. If you are not satisfied with the results, you may contact (the State Hill-Burton agency with address).

Provided, That an applicant which has selected a presumptive compliance guideline under paragraph (d)(1) of this section may, at its option, either (1) add to such notice language stating that the facility's obligation is limited to a specified dollar volume of uncompensated services and that if the facility has, during a specified period (e.g., year, quarter, month), already provided a volume of uncompensated services sufficient to satisfy such obligation, any person inquiring about such services will be given a written statement to that effect which shall also state when additional uncompensated services will be available; or (2) post an additional notice stating that the facility's obligation has been satisfied for the current period and stating when additional uncompensated services will be available.

(j) *Evaluation and enforcement.* The State plan shall provide for evaluation and enforcement of the assurance in accordance with the following requirements:

(1) The State agency shall,

(i) At least annually, perform evaluations of the amount of the various services provided in each facility with respect to which Federal assistance has been provided under the Act, to determine whether such assurance is being complied with; and

(ii) Establish procedures for the investigation of complaints that such assurance is not being complied with.

(2) Evaluation pursuant to paragraph (j)(1) of this section shall be based on the annual budget of each facility for uncompensated services and on financial statements of such facilities filed pursuant to section 646 of the Act and § 53.128(q), and on such other information, including reports of investigations and hearing decisions, as the State agency deems relevant and material.

(3) The State plan shall provide for adequate methods of enforcement of the assurance, including effective sanctions to be applied against any facility which fails to comply with such assurance. Such sanctions may include, but need not be limited to, license revocation, termination of State assistance, and court action.

(k) *Reports.* (1) The State agency shall, not less often than annually, report in writing to the Secretary its evaluation of each facility's compliance with the assurance, the disposition of each complaint received by the State agency, proposed remedial action with respect to each facility found by

the State agency to be not in compliance with the assurance, and the status of such remedial action.

(2) In addition, the State agency shall promptly report to the Regional Attorney and Regional Health Director of the Department of Health and Human Services the institution of any legal action against a facility or the State agency involving compliance with the assurance.

[37 FR 14721, July 22, 1972, as amended at 38 FR 16354, June 22, 1973; 40 FR 46203, Oct. 6, 1975]

§ 53.112 Nondiscrimination.

(a) Before an application is recommended by a State agency to the Secretary for approval, the State agency shall obtain an assurance from the applicant that all portions and services of the entire facility for the construction or modernization of which, or in connection with which, aid under the Act is sought will be made available without discrimination on account of creed and no professionally qualified person will be discriminated against on account of creed with respect to the privilege of professional practice in the facility.

(b) Each construction contract is subject to the condition that the applicant shall comply with the requirements of Executive Order 11246, September 24, 1965 (30 FR 12319), relating to nondiscrimination in construction contract employment, and the applicable rules, regulations, and procedures prescribed pursuant thereto.

(c) Attention is called to the requirement of title VI of the Civil Rights Act of 1964 (42 U.S.C. 2000d; 78 Stat. 252) which provides that no person in the United States shall, on the ground of race, color, or national origin be excluded from participation in, be denied the benefits of, or be subjected to discrimination under any program or activity receiving Federal financial assistance. A regulation implementing such title VI, applicable to assistance under this part for construction and modernization of hospitals and medical facilities, has been issued by the Secretary of Health and Human Services with the approval of the President (45 CFR part 80).

[37 FR 182, Jan. 6, 1972, as amended at 39 FR 31767, Aug. 30, 1974]

§ 53.113 Community service.

(a) *Applicability.* The provisions of this section apply to every applicant which heretofore has given or hereafter will give a community service assurance.

(b) *Definitions.* As used in this section:

(1) The term *community service assurance* means an assurance required by regulations promulgated pursuant to section 603(e)(1) of the Act or the predecessor of that section (section 622(f), Public Health Service Act, enacted by Pub. L. 79–725, 60 Stat. 1041).

(2) The term *facility* has the same meaning as is given it in § 53.111(b)(1).

(3) The term *applicant* has the same meaning as is given it in § 53.111(b)(2).

(4) The term *fiscal year* has the same meaning as is given it in § 53.111(b)(3).

(c) *Assurance.* Before an application under this part is recommended by a State agency to the Secretary for approval, the State agency shall obtain an assurance from the applicant that the facility will furnish a community service.

(d) *Compliance.* In order to comply with its community service assurance an applicant must:

(1)(i) Make the services it furnishes available to the general public, or

(ii) Limit the availability of such services only on the basis of age, medical indigency, or type or kind of medical or mental disability, or

(iii) If the facility constitutes a medical or nursing care unit of a home or other institution, make such home or other institution available in accordance with paragraph (d)(1) (i) or (ii) of this section; *and*

(2)(i) Make arrangements, if eligible to do so, for reimbursement for services with:

(A) Those principal State and local governmental third-party payors which provide reimbursement for services that is not less than the actual cost of such services as determined in accordance with accepted cost accounting principles; and

(B) Those Federal governmental third-party programs, such as Medicare and Medicaid, to the extent that the applicant is entitled to reimbursement at reasonable cost under a formula established in accordance with applicable Federal law.

(ii) Take such additional steps as may be necessary to ensure that admission to and services of the facility will be available to beneficiaries of the governmental programs specified in paragraph (d)(2)(i) of this section without discrimination (or preference) on account of their being such beneficiaries.

(e) *Reports.* The annual statement required by section 646 of the Act and § 53.128(q), a copy of which must be submitted to the State agency in accordance with the requirements of § 53.111(e)(1), shall set forth the amount of the reimbursement received pursuant to each arrangement with a principal governmental third-party payor.

(f) *Evaluation and enforcement.* The State plan shall provide for evaluation and enforcement of the community service assurance in accordance with the following requirements:

(1) The State agency shall,

(i) At least annually, evaluate the compliance of facilities with such assurance; and

(ii) Establish procedures for the investigation of complaints that such assurance is not being complied with.

(2) The State plan shall provide for adequate methods of enforcement of the assurance, including effective sanctions to be applied against any facility which fails to comply with such assurance. Such sanctions may include, but need not be limited to, license revocation, termination of State assistance and court action.

(g) *Reports.* (1) The State agency shall, not less often than annually, report in writing to the Secretary its general evaluation of facilities' compliance with the assurance, the disposition of each complaint received by the State agency, proposed remedial action with respect to each facility found by the State agency to be not in compliance with the assurance, and the status of such remedial action.

(2) In addition, the State agency shall promptly report to the Regional Attorney and Regional Health Director of the Department of Health and Human Services the institution of any legal action against a facility or the State agency involving compliance with the assurance.

[39 FR 31767, Aug. 30, 1974, as amended at 42 FR 16780, Mar. 30, 1977]

Subpart M [Reserved]

Subpart N—Loan Guarantees and Direct Loans

§ 53.154 Waiver of right of recovery.

In determining whether there is good cause for waiver of any right of recovery which he may have against a nonprofit private agency by reason of any payments made pursuant to a loan guarantee, or against a public agency by reason of the failure of such agency to make payments of principal and interest on a direct loan to such agency, the Secretary shall take into consideration the extent to which:

(a) The facility with respect to which the loan guarantee or direct loan was made will continue to be devoted by the applicant or other owner to use for the purpose for which it was constructed or another public or nonprofit purpose which will promote the purposes of the Act;

(b) There are reasonable assurances that for the remainder of the repayment period of the loan other public or non-profit facilities not previously utilized for the purpose for which the facility was constructed will be so utilized and are substantially equivalent in nature and extent for such purposes; and

(c) Such recovery would seriously curtail the provision of medical services to persons in need of such services in the area.

[37 FR 182, Jan. 6, 1972]

§ 53.155 Modification of loans.

No official of the Department of Health and Human Services will approve any proposal to modify the terms of a loan guaranteed under title VI of the Public Health Service Act (42 U.S.C. 291 *et seq.*) and this subpart which would permit the use of the guaranteed loan (or the guarantee) as

collateral for an issue of tax-exempt securities.

[48 FR 42984, Sept. 21, 1983]

§53.156 Fees for modification requests.

(a) Fees will be charged for the processing of requests for parity, and for major and minor modifications of the terms of documents evidencing and securing direct and guaranteed loans. In accordance with the requirements of the User Charge Statute, 31 U.S.C. 9701(b), the Secretary determines the amount of the application fee that must be submitted with each type of modification.

(1) As used in this section, a *request for parity* allows new debt to share lien position (i.e. collateral) with an existing Hill-Burton loan.

(2) As used in this section, a *major modification* is any modification involving the release of $100,000 or more of collateral; a corporate restructuring that involves a transfer of assets; master indenture requests; modifications to a sinking fund; defeasance requests and requests for additional secured indebtedness; and any, other modification that involves a comparably significant use of Department resources.

(3) As used in this section, a *minor modification* is any modification involving the release of less than $100,000 of collateral; an easement; and any other modification that involves a comparable use of Department resources.

(b) A request for modification is to be accompanied by a certified check or money order in the amount of the appropriate fee, payable to the U.S. Treasury. The fees for modification requests submitted on or after October 28, 1986 are as follows:

(1) $1,500 for a minor modification,

(2) $4,500 for a major modification, and

(3) $5,500 for a request for parity.

(c) A submitter may withdraw its request for modification within 10 business days following its receipt and receive a refund of the fee.

(d) If the Secretary determines that a change in the amount of a fee is appropriate, the Department will issue a notice of proposed rulemaking in the FEDERAL REGISTER to announce the proposed amount.

[51 FR 39376, Oct. 28, 1986]

PART 55a—PROGRAM GRANTS FOR BLACK LUNG CLINICS

Subpart A—General Provisions

Sec.
55a.101 Definitions.
55a.102 Who is eligible to apply for a Black Lung clinics grant?
55a.103 What criteria has HHS established for deciding which grant application to fund?
55a.104 What confidentiality requirements must be met?
55a.105 How must grantees carry out their projects?
55a.106 Provision for waiver by the Secretary.
55a.107 What other regulations apply?

Subpart B—Grants to States

55a.201 What is required for a State application?

Subpart C—Grants to Entities Other Than States

55a.301 What is required for an application from an entity other than a State?

AUTHORITY: Sec. 427(a), Federal Mine Safety and Health Act of 1977, 92 Stat. 100 (30 U.S.C. 937(a)).

SOURCE: 50 FR 7913, Feb. 27, 1985, unless otherwise noted.

Subpart A—General Provisions

§55a.101 Definitions.

Act, as used in this part, means the Federal Mine Safety and Health Act of 1977, as amended (30 U.S.C. 801 *et seq.*).

Secretary means the Secretary of Health and Human Services and any other officer or empolyee of the Department of Health and Human Services to whom the authority involved has been delegated.

Miner or *coal miner* means any individual who works or has worked in or around a coal mine or coal preparation facility in the extraction or preparation of coal. The term also includes an individual who works or has worked in coal mine construction or transportation in or around a coal mine, to the

extent that the individual was exposed to coal dust as a result of employment.

§ 55a.102 Who is eligible to apply for a Black Lung clinics grant?

Any State or public or private entity may apply for a grant under this part.

§ 55a.103 What criteria has HHS established for deciding which grant application to fund?

(a) The Secretary will give preference to a State, which meets the requirements of this part and applies for a grant under this part, over other applicants in that State.

(b) Within the limits of funds available for these purposes the Secretary may award grants to assist in the carrying out of those programs which will in the Secretary's judgment best promote the purposes of section 427(a) of the Act, taking into account;

(1) The number of miners to be served and their needs; and

(2) The quality and breadth of services to be provided.

§ 55a.104 What confidentiality requirements must be met?

All information as to personal facts and circumstances obtained by the grantee's staff about recipients of services shall be held confidential and shall not be disclosed without the individual's consent except as may be required by law or as may be necessary to provide service to the individual or to provide for audits with appropriate safeguards for confidentiality of patient records. Otherwise, information may be disclosed only in summary, statistical, or other form which does not identify particular individuals.

§ 55a.105 How must grantees carrry out their projects?

Grantees must carry out their projects in accordance with their applications and the provisions of this part.

§ 55a.106 Provision for waiver by the Secretary.

The Secretary may, for good cause shown, waive provisions of these regulations.

§ 55a.107 What other regulations apply?

Other regulations which apply to the Black Lung Clinics Program include, but are not limited to, the following:

42 CFR part 50, subpart D—Public Health Service grant appeals procedure;

42 CFR part 50, subpart E—Maximum allowable cost for drugs;

45 CFR part 16—Procedures of the Departmental Grant Appeals Board;

45 CFR part 19—Limitations on payment or reimbursement for drugs;

45 CFR part 74—Administration of grants;

45 CFR part 75—Informal grant appeals procedures;

45 CFR part 80—Nondiscrimination under programs receiving Federal assistance through the Department of Health and Human Services effectuation of title VI of the Civil Rights Act of 1964;

45 CFR part 81—Practice and procedure for hearings under part 80;

45 CFR part 84—Nondiscrimination on the basis of handicap in programs and activities receiving or benefiting from Federal financial assistance; and

45 CFR part 91—Nondiscrimination on the basis of age in HHS programs or activities receiving Federal financial assistance.

Subpart B—Grants to States

§ 55a.201 What is required for a State application?

An approvable State application must contain assurances that the State will:

(a) Provide the following services for active and inactive miners in the State:

(1) Primary care;

(2) Patient and family education and counseling;

(3) Outreach;

(4) Patient care coordination, including individual patient care plans for all patients;

(5) Antismoking advice; and

(6) Other symptomatic treatments.

(b) Provide medical services in consultation with a physician with special training or experience in the diagnosis and treatment of respiratory diseases.

(c) Meet all criteria for approval and designation by the Department of Labor under 20 CFR part 725 to perform disability examination and provide treatment under the Act.

(d) Use grant funds under this part to supplement and not supplant existing services of the State.

(e) Provide the services described above for those miners previously served by a Black Lung Clinic in the State for which grant support expires during the funding period of the State's grant.

(f) Provide services described above regardless of a person's ability to pay.

(g) Audit its expenditures from amounts received under this part in accordance with the provisions of Attachment P, Audit Requirements, of Office of Management and Budget Circular A–102, Uniform Requirements for Assistance to State and Local Governments, as adopted for the Department of Health and Human Services by 45 CFR part 74.

(Approved by the Office of Management and Budget under control number 0915–0081)

[50 FR 7913, Feb. 27, 1985, as amended at 50 FR 53156, Dec. 30, 1985]

Subpart C—Grants to Entities Other Than States

§ 55a.301 What is required for an application from an entity other than a State?

An approvable application must contain the following:

(a) A plan for the provision of the services required by §55a.201(a), consistent with the requirements of §55a.201 (b) and (c). The plan must also contain at least the following elements:

(1) A description of the target population to whom services are to be provided, including a statement of the need for services;

(2) An assurance that charges shall be made for services rendered as follows:

(i) A schedule shall be maintained listing fees or payments for the provision of services, designed to cover reasonable costs of operations;

(ii) A schedule of discounts adjusted on the basis of a patient's ability to pay shall be maintained. The schedule of discounts must provide for a full discount to individuals and families with annual incomes at or below the poverty line established in accordance with section 673(2) of the Community Services Block Grant Act (42 U.S.C. 9902(2)), (except that nominal fees for service may be requested, but not required, from individuals and families with annual incomes at or below the poverty line). No discounts shall be provided to individuals and families with annual incomes greater than twice the poverty line; and

(iii) Where third-party payors (including Government Agencies) are authorized or under a legal obligation to pay all or a portion of such charges, all services covered by that reimbursement plan will be billed and every reasonable effort will be made to obtain payment.

(b) An assurance that no person will be denied services because of inability to pay.

(c) An assurance that grant funds received under this part will be used to supplement and not supplant existing services of the grantee.

(Approved by the Office of Management and Budget under control number 0915–0081)

[50 FR 7913, Feb. 27, 1985, as amended at 50 FR 53156, Dec. 30, 1985]

PART 56—GRANTS FOR MIGRANT HEALTH SERVICES

Subpart A—General Provisions

Sec.
56.101 Applicability.
56.102 Definitions.
56.103 Eligibility.
56.104 Application.
56.105 Accord with health planning.
56.106 Amount of grant.
56.107 Priorities for grants.
56.108 Use of grant funds.
56.109 Grant payments.
56.110 Nondiscrimination.
56.111 Confidentiality.
56.112 Publications and copyright.
56.113 Grantee accountability.
56.114 Applicability of 45 CFR part 74.

Subpart B—Grants for Planning and Developing Migrant Health Centers

56.201 Applicability.
56.202 Application.
56.203 Project elements.
56.204 Grant evaluation and award.

Subpart C—Grants for Operating Migrant Health Centers

56.301 Applicability.
56.302 Application.
56.303 Project elements.
56.304 Governing board.
56.305 Grant evaluation and award.

Subpart D—Grants for Operating Migrant Health Entities

56.401 Applicability.
56.402 Application.
56.403 Project elements.
56.404 Grant evaluation and award.

Subpart E—Grants for Planning and Developing Migrant Health Programs

56.501 Applicability.
56.502 Application.
56.503 Project elements.
56.504 Grant evaluation and award.

Subpart F—Grants for Operating Migrant Health Programs

56.601 Applicability.
56.602 Application.
56.603 Project elements.
56.604 Grant evaluation and award.

Subpart G—Grants for Technical Assistance

56.701 Applicability.
56.702 Application.
56.703 Project elements.
56.704 Grant evaluation and award.

Subpart H—Acquisition and Modernization of Existing Buildings

56.801 Applicability of 42 CFR part 51c, subpart E.

AUTHORITY: Secs. 215, 319, Public Health Service Act (42 U.S.C. 216, 247d).

SOURCE: 42 FR 60406, Nov. 25, 1977, unless otherwise noted.

Subpart A—General Provisions

§ 56.101 Applicability.

The regulations of this subpart are applicable to all grants authorized by section 319 of the Public Health Service Act (42 U.S.C. 247d).

§ 56.102 Definitions.

As used in this part:

(a) *Act* means the Public Health Service Act (42 U.S.C. 201 *et seq.*), as amended.

(b)(1) *Agriculture* means farming in all its branches, including—

(i) Cultivation and tillage of the soil;

(ii) The production, cultivation, growing, and harvesting of any commodity grown on, in, or as an adjunct to or part of a commodity grown in, or on, the land; and

(iii) Any practice (including preparation and processing for market and delivery to storage or to market or to carriers for transportation to market) performed by a farmer or on a farm incident to or in conjunction with an activity described in subsection (ii).

(c) *Catchment area* means the geographic area served by a project funded under section 319 of the Act.

(d) *Environmental health services* means the detection and alleviation of unhealthful conditions of the environment of the persons served by the project, such as problems associated with water supply, sewage treatment, solid waste disposal, rodent and parasite infestation, field sanitation, and housing conditions and the treatment of medical conditions arising therefrom. For the purposes of this part, the detection and alleviation of unhealthful conditions of the environment includes the notification of appropriate Federal, State, or local authorities responsible for correcting such conditions and the making of arrangements therefor with such authorities.

(e) *Health professionals* means professionals (such as physicians, dentists, nurses, podiatrists, optometrists, and physicians' extenders) who are engaged in the delivery of health services and who meet all applicable Federal or State requirements to provide their professional services.

(f) *High impact area* means a catchment area which has not less than 6,000 migratory agricultural workers, seasonal agricultural workers, and members of the families of such workers residing within its boundaries for more than two months in the most recent calendar year for which statistical data acceptable to the Secretary is available.

(g)(1) *Migrant health center* means an entity which either through its staff and supporting resources or through contracts or cooperative arrangements

with other public or private entities provides for migratory agricultural workers, seasonal agricultural workers, and the members of the families of such workers, within its catchment area:

(i) Primary health services;

(ii) As determined by the Secretary to be appropriate for particular centers, supplemental health services necessary for the adequate support of primary health services;

(iii) Referral to providers of supplemental health services and payment, as determined by the Secretary to be appropriate and feasible, for the provision of such services;

(iv) Environmental health services, as determined by the Secretary to be appropriate for particular centers;

(v) As determined by the Secretary to be appropriate for particular centers, infectious and parasitic disease screening and control services;

(vi) As determined by the Secretary to be appropriate for particular centers, accident prevention programs, including prevention of excessive exposure to pesticides through, but not limited to, notification of appropriate Federal, State or local authorities of hazardous conditions due to pesticide use; and

(vii) Information on the availability and proper use of health services.

(2) For purposes of paragraph (g)(1) of this section, the provision of a given service by a center will be determined by the Secretary to be appropriate where

(i) There is a need, as determined by the Secretary, for the provision of such service to individuals described in paragraph (g)(1) of this section in the catchment area; and

(ii) The provision of such service by the center is feasible, taking into consideration the center's projected revenues, other resources, and grant support under this part.

(h) *Migratory agricultural worker* means an individual whose principal employment is in agriculture on a seasonal basis, who has been so employed within the last 24 months, and who establishes for the purpose of such employment a temporary place of abode;

(i) *Nonprofit*, as applied to any private agency, institution, or organization, means one which is a corporation or association, or is owned and operated by one or more corporations or associations, no part of the net earnings of which inures, or may lawfully inure, to the benefit of any private shareholder or individual.

(j) *Physician* means a licensed doctor of medicine or doctor of osteopathy.

(k) *Primary care* means preventive, diagnostic, treatment, consultant, referral, and other services rendered by physicians (including, as appropriate, physicians' extenders), routine associated laboratory services and diagnostic radiologic services, and emergency health services.

(l) *Primary health services* means:

(1) Diagnostic, treatment, consultative referral, and other services rendered by physicians and, where feasible, by physicians' extenders, such as physicians' assistants, nurse clinicians, and nurse practitioners;

(2) Diagnostic laboratory services and diagnostic radiologic services;

(3) Preventive health services, including children's eye and ear examinations, prenatal and post-partum care, perinatal services, well child care (including periodic screening), immunizations, and voluntary family planning services;

(4) Emergency medical services, including provision, through clearly defined arrangements, for access of users of the center to health care for medical and dental emergencies during and after the center's regularly scheduled hours;

(5) Transportation services as needed for adequate patient care, sufficient so that residents of the catchment area served by the center with special difficulties of access to services provided by the center receive such services; and

(6) Preventive dental services provided by a licensed dentist or other qualified personnel, including—

(i) Oral hygiene instruction;

(ii) Oral prophylaxis, as necessary; and

(iii) Topical application of fluorides, and the prescription of fluorides for systemic use when not available in the community water supply.

(m) *Seasonal agricultural worker* means an individual whose principal

employment is in agriculture on a seasonal basis and who is not a migratory agricultural worker.

(n) *Secretary* means the Secretary of Health and Human Services and any other officer or employee of the Department of Health and Human Services to whom the authority involved has been delegated.

(o) *Supplemental health services* means health services which are not included as primary health services and which are:

(1) Inpatient and outpatient hospital services;

(2) Home health services;

(3) Extended care facility services;

(4) Rehabilitative services (including physical and occupational therapy) and long-term physical medicine;

(5) Mental health services, including services of psychiatrists, psychologists, and other appropriate mental health professionals;

(6) Dental services other than those provided as primary health services;

(7) Vision services, including routine eye and vision examinations and provision of eyeglasses, as appropriate and feasible;

(8) Allied health services;

(9) Pharmaceutical services, including the provision of prescription drugs;

(10) Therapeutic radiologic services;

(11) Ambulatory surgical services;

(12) Public health services (including nutrition education and social services);

(13) Health education services; and

(14) Services including the services of outreach workers, which promote and facilitate optimal use of primary health services and services referred to in the preceding subparagraphs of this paragraph and, if a substantial number of individuals in the population served by the center are of limited English-speaking ability, the services of outreach workers and other personnel fluent in the language or languages spoken by such individuals.

§ 56.103 Eligibility.

Any public or nonprofit private entity is eligible to apply for a grant under this part.

§ 56.104 Application.

(a) An application for a grant under this part shall be submitted to the Secretary at such time and in such form and manner as the Secretary may prescribe.

(b) The application shall contain a budget and narrative plan of the manner in which the applicant intends to conduct the project and carry out the requirements of this part. The application must describe how and the extent to which the project has met, or plans to meet, each of the requirements in subpart B (relating to grants for planning and development of migrant health centers), subpart C (relating to grants for the operation of migrant health centers), subpart D (relating to grants for the operation of migrant health entities), subpart E (relating to grants for planning and developing migrant health programs), subpart F (relating to grants for the operation of migrant health programs), or subpart G (relating to grants for technical assistance), as applicable. In addition, applications must include:

(1) A statement of specific, measurable objectives and the methods to be used to assess the achievement of the objectives in specified time periods and at least on an annual basis.

(2) The precise boundaries of the catchment area to be served by the applicant. In addition, the application shall include information sufficient to enable the Secretary to determine that the applicant's catchment area meets the following criteria:

(i) The size of such area is such that the services to be provided by the applicant are available and accessible to the residents of the area promptly and as appropriate;

(ii) The boundaries of such area conform, to the extent practicable, to relevant boundaries of political subdivisions, school districts, and areas served by Federal and State health and social service programs; and

(iii) The boundaries of such area eliminate, to the extent possible, barriers resulting from the area's physical characteristics, its residential patterns, its economic and social groupings, and available transportation.

(3)(i) The number of migratory agricultural workers and members of their families, and seasonal agricultural workers and members of their families which resided in the project's catchment area in the most recent calendar year for which statistical data acceptable to the Secretary is available; and

(ii) The approximate period or periods of residence of all groups of migratory agricultural workers and their families counted under paragraph (b)(3)(i) of this section.

(4) The results of an assessment of the need that the population to be served has for the services to be provided by the project (or in the case of applications for planning and development projects, the methods to be used in assessing such need), taking into consideration the following factors:

(i) Available health resources in relation to size of the catchment area and population of migratory and seasonal agricultural workers and their families in such area, including appropriate ratios of primary care physicians in general or family practice, internal medicine, pediatrics, or obstetrics and gynecology, to such population;

(ii) Health indices for such population, such as infant mortality rate;

(iii) Economic factors affecting such population's use of health services, such as percentage of such population with incomes below the poverty level;

(iv) Demographic factors affecting such population's need and demand for health services, such as percentage of such population age 65 and over; and

(v) Special factors of access resulting from the conditions of employment of such workers (including working hours, housing, and sanitation).

(5) Position descriptions for personnel who will be utilized in carrying out the activities of the project and a statement indicating the need for the positions to be supported with grant funds to accomplish the objectives of the project.

(6) Letters and other forms of evidence showing that efforts have been made to secure financial and professional assistance and support for the project within the proposed catchment area and the continuing involvement of the community in the development and operation of the project.

(7) An assurance that an independent certified public accountant will be engaged to certify that the project's system for the management and control of its finances will be in accord with sound financial management practices, including applicable Federal requirements.

(8) A list of all services proposed to be provided by the project.

(9) A list of services which are to be provided directly by the project through its own staff and resources and a description of any contractual or other arrangements (including copies of documents, where available) entered into, or planned for the provision of services.

(10) The schedule of fees and/or payments and schedule of discounts for services provided by the project.

(11) If the applicant provides services to populations other than migratory and seasonal agricultural workers and their families, identification of such populations.

NOTE: Funds granted under this part and non-Federal funds required to be expended by the project as a condition of any such grant may not be used to provide services to individuals who are not migratory or seasonal agricultural workers or members of the families of such workers.

(12) Evidence that all applicable requirements for review and/or approval of the application under title XV of the Act have been met.

(13) An assurance that the project will be conducted in accordance with the applicable requirements of this part.

(c) The application must be executed by an individual authorized to act for the applicant and to assume on behalf of the applicant the obligations imposed by the statute, the applicable regulations of this part, and any additional conditions of the grant.

(Sec. 215, Public Health Service Act, 58 Stat. 690, 67 Stat. 631 (42 U.S.C. 216); sec. 329, Public Health Service Act, 95 Stat. 569 (42 U.S.C. 254b)).

[42 FR 60406, Nov. 25, 1977, as amended at 48 FR 29202, June 24, 1983; 48 FR 45559, Oct. 6, 1983]

§ 56.105 Accord with health planning.

A grant may be made under this part only if the applicable requirements of title XV of the Act relating to review and approval by the appropriate health planning agencies have been met.

§ 56.106 Amount of grant.

(a) The amount of any award under this part will be determined by the Secretary on the basis of his estimate of the sum necessary for a designated portion of direct project costs plus an additional amount for indirect costs, if any, which will be calculated by the Secretary either:

(1) On the basis of the estimate of the actual indirect costs reasonably related to the project; or

(2) On the basis of a percentage of all, or a portion of, the estimated direct costs of the project when there are reasonable assurances that the use of such percentage will not exceed the approximate actual indirect costs. Such award may include an estimated provisional amount for indirect costs or for designated direct costs (such as fringe benefit rates) subject to upward (within the limits of available funds) as well as downward adjustments to actual costs when the amount properly expended by the grantee for provisional items has been determined by the Secretary: *Provided, however,* That no grant shall be made for an amount in excess of the total costs found necessary by the Secretary to carry out the project.

(i) In determining the percentage of project costs to be borne by the grantee, factors which the Secretary will take into consideration will include the following:

(A) The ability of the grantee to finance its share of project costs from non-Federal sources;

(B) The need in the area served by the project for the services to be provided; and

(C) The extent to which the project will provide services in an innovative manner which the Secretary desires to stimulate in the interest of developing more effective health service delivery systems on a regional or national basis.

(ii) At any time after approval of an application under this part, the Secretary may retroactively agree to a percentage of project costs to be borne by the grantee lower than that determined pursuant to paragraph (a)(2)(i) of this section where he finds that changed circumstances justify a smaller contribution.

(iii) In determining the grantee's share of project costs, costs borne by Federal grant funds, or costs used to match other Federal grants, may not be included except as otherwise provided by law or regulations.

(b) All grant awards shall be in writing, and shall set forth the amount of funds granted and the period for which support is recommended.

(c) Neither the approval of any project nor any grant award, shall commit or obligate the United States in any way to make any additional, supplemental, continuation, or other award with respect to any approved project or portion thereof. For continuation support, grantees must make separate application.

§ 56.107 Priorities for grants.

(a) Grants under sections 319(c)(1)(A), 319(d)(1)(A), 319(d)(1)(B) of the Act and subparts B, C, and D of this part shall be made in accordance with the following priorities:

(1) Highest priority will be given to approvable applications which propose to serve catchment areas in which 6,000 or more migratory agricultural workers and members of their families reside for more than two months in the calendar year.

(2) Second priority will be given to approvable applications which propose to serve catchment areas in which fewer than 6,000 but more than 1,000 migratory agricultural workers and members of their families reside for more than two months in the applicable calendar year.

(3) Third priority will be given to approvable applications which propose to serve catchment areas in which migratory agricultural workers and members of their families reside but in which fewer than 1,000 such persons reside for more than two months in the applicable calendar year.

(4) Fourth priority will be given to approvable applications which propose

to serve catchment areas in which migratory agricultural workers and members of their families reside in the applicable calendar year but in which no such persons reside for more than two months in such year.

(5) Fifth priority will be given to approvable applications which propose to serve catchment areas in which no migratory agricultural workers or members of their families reside for any period in the applicable calendar year but in which 6,000 or more seasonal agricultural workers and the members of their families reside.

(6) Lowest priority will be given to approvable applications which propose to serve catchment areas in which no migratory agricultural workers or members of their families reside for any period in the applicable calendar year and in which fewer than 6,000 seasonal agricultural workers and the members of their families reside.

(b) Grants under sections 319(c) (1)(B) and 319(d)(1)(C) of the Act and subparts E and F of this part will be made in accordance with priorities set forth in paragraphs (a)(2) through (a)(6) of this section, in the order set forth.

(c) For the purposes of this section, the applicable calendar year will be the calendar year for which data is provided in accordance with § 56.104(b)(3) of this subpart.

§ 56.108 Use of grant funds.

(a) Any funds granted pursuant to this part, as well as other funds to be used in performance of the approved project, may be expended solely for carrying out the approved project in accordance with section 319 of the Act, the applicable regulations of this part, the terms and conditions of the award, and the applicable cost principles prescribed in subpart Q of 45 CFR part 74.

(b) Project funds awarded under this part may be used for, but need not be limited to, the following:

(1) The costs of acquiring and modernizing existing buildings (including the costs of amortizing the principal of, and paying interest on, loans), but only in accordance with subpart H of this part and as approved in the grant award;

(2) The costs of obtaining technical assistance to develop and improve the management or service capability of the project but only as approved by the Secretary;

(3) To reimburse members of the grantee's governing board established pursuant to § 56.304 of subpart C, or advisory council established pursuant to § 56.603(q) of subpart F, if any, for reasonable expenses actually incurred by reason of their participation in the activities of such board or council;

(4) To reimburse such governing board or advisory council members who are individuals eligible to be served by the project for wages lost by reason of participation in the activities of such board or council;

(5) The cost of delivering health services to migratory agricultural workers, seasonal agricultural workers and the members of their families within the project's catchment area, within the following limitations: grant funds may be used to pay the full cost of project services to such individuals and families with annual incomes at or below those set forth in the most recent ''CSA Income Poverty Guidelines'' (45 CFR 1060.2) issued by the Community Services Administration, and to pay the portion of the cost of services provided in accordance with the schedule of discounts which, under such schedule, is uncompensated; *Provided,* That

(i) Charges will be made to such individuals and families in accordance with § 56.303(f) of subpart C or § 56.603(e) of subpart F, as applicable;

(ii) Reasonable effort shall be made to collect such charges under a billing and collections system; and

(iii) The charge to grant funds shall exclude any amounts collected pursuant to paragraph (b)(5)(ii) of this section;

(6) The cost of insurance for medical emergency and out-of-area coverage; and

(7) The cost of providing to the staff and governing board, if any, of the project training related to the management of an ambulatory care facility, and to the staff of a project funded under subpart C, D, or F of this part, training related to the provision of primary, supplemental and environmental health services provided or to be provided by the project, consistent with

the applicable requirements of 45 CFR part 74.

(c) Prior approval by the Secretary of revisions of the budget and project plan is required whenever there is to be a significant change in the scope or nature of project activities.

§ 56.109 Grant payments.

The Secretary shall from time to time make payments to a grantee of all or a portion of any grant award, either in advance or by way of reimbursement for expenses incurred or to be incurred, to the extent he determines such payments necessary to promote prompt initiation and advancement of the approved project.

§ 56.110 Nondiscrimination.

(a) Attention is called to the requirements of title VI of the Civil Rights Act of 1964 (78 Stat. 252, 42 U.S.C. 2000d *et seq.*) and in particular section 601 of such Act which provides that no person in the United States shall on the grounds of race, color, or national origin be excluded from participation in, be denied the benefits of, or be subjected to discrimination under any program or activity receiving Federal financial assistance. A regulation implementing such title VI, which applies to grants made under this part, has been issued by the Secretary of Health and Human Services with the approval of the President (45 CFR part 80). In addition, no person shall, on the grounds of age, sex, creed, or marital status (unless otherwise medically indicated), be excluded from participation in, be denied the benefits of, or be subjected to discrimination under any program or activity so receiving Federal financial assistance.

(b) Attention is called to the requirements of section 504 of the Rehabilitation Act of 1973, as amended, which provides that no otherwise qualified handicapped individual in the United States shall, solely by reason of his handicap, be excluded from participation in, be denied the benefits of, or be subjected to discrimination under any program or activity receiving Federal financial assistance.

§ 56.111 Confidentiality.

All information as to personal facts and circumstances obtained by the project staff about recipients of services shall be held confidential and shall not be divulged without the individual's consent except as may be required by law or as may be necessary to provide service to the individual or to provide for medical audits by the Secretary or his designee with appropriate safeguards for confidentiality of patient records. Otherwise, information may be disclosed only in summary, statistical, or other form which does not identify particular individuals.

§ 56.112 Publications and copyright.

Except as may otherwise be provided under the terms and conditions of the award, the grantee may copyright without prior approval any publications, films, or similar materials developed or resulting from a project supported by a grant under this part, subject, however, to a royalty-free, nonexclusive, and irrevocable license or right in the Government to reproduce, translate, publish, use, disseminate, and dispose of such materials and to authorize others to do so.

§ 56.113 Grantee accountability.

(a) *Accounting for grant award payments.* All payments made by the Secretary shall be recorded by the grantee in accounting records separate from the records of all other funds, including funds derived from other grant awards. With respect to each approved project, the grantee shall account for the sum total of all amounts paid as well as other funds and in-kind contributions by presenting or otherwise making available evidence satisfactory to the Secretary of expenditures for direct and indirect costs meeting the requirements of this part: *Provided, however,* That when the amount awarded for indirect costs was based on a predetermined fixed-percentage of estimated direct costs, the amount allowed for indirect costs shall be computed on the basis of such predetermined fixed-percentage rates applied to the total, or a selected element thereof, of the reimbursable direct costs incurred.

(b) *Accounting for interest earned on grant funds.* Pursuant to section 203 of

the Intergovernmental Cooperation Act of 1968 (42 U.S.C. 4213), a State will not be held accountable for interest earned on grant funds, pending their disbursement for grant purposes. A State, as defined in section 102 of the Intergovernmental Cooperation Act, means any one of the several States, the District of Columbia, Puerto Rico, any territory or possession of the United States, or any agency or instrumentality of a State, but does not include the government of the political subdivisions of the State. All grantees other than a State, as so defined, must return all interest earned on grant funds to the Federal Government.

(c) *Grant closeout*—(1) *Date of final accounting.* A grantee shall render, with respect to each approved project, a full account, as provided herein, as of the date of the termination of grant support. The Secretary may require other special and periodic accounting.

(2) *Final settlement.* There shall be payable to the Federal Government as final settlement with respect to each approved project, the sum of:

(i) Any amount not accounted for pursuant to paragraph (a) of this section;

(ii) Any credits for earned interest pursuant to paragraph (b) of this section;

(iii) Any other amounts due pursuant to subparts F, M, and O of 45 CFR part 74.

Such total sum shall constitute a debt owed by the grantee to the Federal Government and shall be recovered from the grantee or its successors or assignees by setoff or other action as provided by law.

§ 56.114 Applicability of 45 CFR part 74.

The provisions of 45 CFR part 74, establishing uniform administrative requirements and cost principles, shall apply to all grants under this part to States and local governments as those terms are defined in subpart A of that part 74. The relevant provisions of the following subparts of part 74 shall also apply to grants to all other grantee organizations under this part:

45 CFR PART 74

Subpart
A General.
B Cash depositories.
C Bonding and insurance.
D Retention and custodial requirements for records.
F Grant-related income.
G Matching and cost sharing.
K Grant payment requirements.
L Budget revision procedures.
M Grant closeout, suspension, and termination.
O Property.
Q Cost principles.

Subpart B—Grants for Planning and Developing Migrant Health Centers

§ 56.201 Applicability.

The regulations of this subpart, in addition to the regulations of subpart A of this part, are applicable to grants awarded pursuant to section 319(c)(1)(A) of the Act for projects for planning and developing migrant health centers in high impact areas.

§ 56.202 Application.

To be approved by the Secretary under this subpart, an application for a grant must, in addition to meeting the requirements of § 56.104 of subpart A of this part, contain information sufficient to enable the Secretary to determine that the project for which the grant is sought will meet the requirements of this part.

§ 56.203 Project elements.

A project for planning and developing a migrant health center supported under this subpart must:

(a) Determine (by survey or other appropriate means) the approximate number of (1) migratory agricultural workers and the members of their families, and (2) seasonal agricultural workers and the members of their families, within the proposed catchment area in the calendar year in which the grant is made and the period of time these workers and their families reside in the catchment area during such year.

(b) Prepare an assessment of the need of the population proposed to be served by the migrant health center for the

services set forth in § 56.102(g)(1) of subpart A of this part. This assessment of need must, at a minimum, include the factors listed in § 56.104(b)(3) (i)–(iv).

(c) Design a migrant health center program for such population, based on the assessment prepared pursuant to paragraph (b) of this section which indicates in detail how the proposed center will fulfill the needs identified in that assessment and meet the requirements of subpart C of this part.

(d) Develop a plan for the implementation of the program designed pursuant to paragraph (c) of this section. This implementation plan must provide for the time-phased recruitment and training of the personnel essential for the operation of a migrant health center and the gradual assumption of operational status of the project so that the project will, in the judgment of the Secretary, meet the requirements contained in subpart C of this part by the end of the project period.

(e) Implement the plan developed pursuant to paragraph (d) of this section in accordance with such paragraph.

(f) Make efforts to secure within the proposed catchment area of such center, to the extent possible, financial and professional assistance and support for the project.

(g) Initiate and encourage continuing community involvement in the development and operation of the project through, for example, contributions or loans of cash, services, equipment, full- or part-time staff, space, materials, or facilities.

(h) Provide for sufficient staff, qualified by training and experience, to carry out the project and establish standards and qualifications for personnel (including the project director).

(i) Utilize, to the maximum extent feasible, other Federal, State, local, and private resources available for support of the project, prior to use of project funds under this subpart.

(j) Provide the means for evaluating the project's progress in achievement of its specific objectives, and submit such progress reports on the project as the Secretary may from time to time request.

§ 56.204 Grant evaluation and award.

(a) Within the limits of funds determined by the Secretary to be available for such purpose, the Secretary may award grants under this subpart to applicants therefor which, in his judgment, will provide needed health services in a catchment area which will not be served by another project funded under this part and meet the applicable requirements of section 319(c)(1)(A) of the Act and this part, in accordance with priorities established pursuant to section 319(b) of the Act and § 56.107 of subpart A of this part; *Provided,* That in the case of applicants which propose to serve substantially the same catchment areas or where available funds are insufficient to fund all approvable applications within a priority category specified in § 56.107,

(1) Priority shall be given to applications submitted by community-based organizations which are representative of the population to be served by the project. For purposes of this paragraph, an applicant shall be deemed to be such an organization if it provides a formal mechanism (such as membership on the organization's governing body or membership on an advisory body) which gives migratory seasonal agricultural workers and their families significant involvement in the formulation of the organization's policies; and

(2) Where all such applicants are community-based organizations representative of the population to be served by the project, the Secretary shall award the grant to the applicants which will, in his judgment, best promote the purposes of section 319(c)(1)(A) of the Act and the applicable regulations of this part, taking into account with respect to each application:

(i) The degree to which the proposed project satisfactorily provides for the elements set forth in § 56.203;

(ii) The administrative and management capability of the applicant;

(iii) The extent to which community resources will be utilized in the project; and

(iv) The degree to which the applicant intends to integrate services supported by a grant under this part with health services provided under other

federally assisted health services or reimbursement programs or projects.

(b) The Secretary shall award no more than two grants under this subpart for the same project.

Subpart C—Grants for Operating Migrant Health Centers

§ 56.301 Applicability.

The regulations of this subpart, in addition to the regulations of subpart A of this part, are applicable to grants awarded pursuant to section 319(d)(1)(A) of the Act for the costs of operation of migrant health centers in high impact areas.

§ 56.302 Application.

To be approved by the Secretary under this subpart, an application for a grant must, in addition to meeting the requirements of § 56.104 of subpart A of this part,

(a) Be submitted by an entity (which may be a co-applicant) which the Secretary determines is a migrant health center, and

(b) Contain information sufficient to enable the Secretary to determine that the center will meet the requirements of this part.

§ 56.303 Project elements.

A migrant health center supported under this subpart must:

(a) Provide the health services of the center so that such services are available and accessible promptly, as appropriate, and in a manner which will assure continuity of service to the migratory and seasonal agricultural workers and their families within the center's catchment area.

(b) Implement a system for maintaining the confidentiality of patient records in accordance with the requirements of § 56.111 of subpart A of this part.

(c) Have an ongoing quality assurance program which provides for the following:

(1) Organizational arrangements, including a focus of responsibility, to support the quality assurance program and the provision of high quality patient care;

(2) Periodic assessment of the appropriateness of the utilization of services and the quality of services provided or proposed to be provided by the center, and by other providers through contract or other cooperative arrangement with the center. Such assessments must:

(i) Be conducted by physicians or by other appropriate health professionals under the supervision of physicians or, as appropriate, by health professionals who are peers of the health professionals who provided the services;

(ii) Be based on the systematic collection and evaluation of patient records; and

(iii) Identify and document the necessity for change in the provision of services by the center and result in the institution of such change, where indicated.

(d) Develop management and control systems which are in accordance with sound financial management procedures, including the provision for an audit (1) conducted in accordance with the "Guide for Audits of Migrant Health Grants" of the DHHS Audit Agency, and (2) conducted with reasonable frequency, usually annually but not less frequently than every two years (unless waived for cause by the Secretary), to be made by qualified individuals who are sufficiently independent of those who authorize the expenditure of Federal funds to produce unbiased opinions, conclusions, or judgments, and to determine, at a minimum, the fiscal integrity of grant financial transactions and reports, and compliance with the applicable regulations of this part and the terms and conditions of the grant.

(e) Where the cost of care and services furnished by or through the center is to be reimbursed under title XIX or title XX of the Social Security Act, obtain or make every reasonable effort to obtain a written agreement with the title XIX or title XX State agency for such reimbursement.

(f) Have prepared a schedule of fees or payments for the provision of its services designed to cover its reasonable costs of operation and a corresponding schedule of discounts adjusted on the basis of the patient's ability to pay. The schedule of discounts must provide for a full discount to individuals and families with annual incomes at or

below those set forth in the most recent CSA Poverty Income Guidelines (42 CFR 1060.2) (except that nominal fees for service may be collected from such individuals and families) and for no discount to individuals and families with annual incomes greater than twice those set forth in such Guidelines.

(g) Make every reasonable effort, including the establishment of systems for eligibility determination, billing, and collection, to

(1) Collect reimbursement for its costs in providing health services to persons who are entitled to insurance benefits under title XVIII of the Social Security Act, to medical assistance under a State plan approved under title XIX of such Act, to social services and family planning under title XX of such Act, or to assistance for medical expenses under any other public assistance program, grant program, or private health insurance or benefit program on the basis of the schedule of fees prepared pursuant to paragraph (f) of this section without application of any discounts, and

(2) Secure from patients payments for services in accordance with the schedule of fees and discounts required by paragraph (f) of this section.

(h) Have a governing board which meets the requirements of § 56.304.

(i) Have developed an overall plan and budget for the center that:

(1) Provides for an annual operating budget and a three-year financial management plan which includes all anticipated income and expenses related to items which would, under generally accepted accounting principles, be considered income and expense items;

(2) Provides for a capital expenditure plan for at least a three-year period (including the year to which the operating budget described in paragraph (h)(i)(1) is applicable) which includes and identifies in detail the anticipated sources of financing for, and the objective of, each anticipated expenditure in excess of $100,000 related to the acquisition of land, the improvement of land, buildings, and equipment and the replacement, modernization and expansion of buildings and equipment which would, under generally accepted accounting principles, be considered capital items;

(3) Provides for plan review and updating at least annually; and

(4) Is prepared under the direction of the governing board by a committee consisting of representatives of the governing board, the administrative staff, and the medical staff, if any, of the center.

(j) Establish basic statistical data, cost accounting, management information, and reporting or monitoring systems which will enable the center to provide such statistics and other information as the Secretary may reasonably require relating to the center's costs of operation, patterns of utilization of services, and the availability, accessibility, and acceptability of its services, and to make such reports to the Secretary in a timely manner with such frequency as the Secretary may reasonably require.

(k) Review its catchment area annually to insure that the criteria set out in § 56.104(b)(2) are met and, if criteria are not met, revise its catchment area, with the approval of the Secretary, to conform with such criteria to the extent feasible.

(l) In the case of a center which serves a population including a substantial proportion of individuals of limited English-speaking ability, have developed a plan and made arrangements responsive to the needs of such populations for providing services to the extent practicable in the language and cultural context most appropriate to such individuals, and have identified an individual on its staff who is fluent in both that language and in English and whose responsibilities include providing guidance to such individuals and to appropriate staff members with respect to cultural sensitivities and bridging linguistic and cultural differences. If more than one non-English language is spoken by such group or groups, an individual or individuals fluent in those languages and English must be so identified.

(m) Be operated in a manner calculated to preserve human dignity and to maximize acceptability and effective utilization of services.

(n) To the extent possible, coordinate and integrate project activities with

the activities of other federally funded, as well as State and local, health services delivery projects and programs serving the same population.

(o) Establish means for evaluating progress toward the achievement of the specific objectives of the project.

(p) Provide sufficient staff, qualified by training and experience, to carry out the activities of the center.

(q) Assure that facilities utilized in the performance of the project meet applicable fire and life safety codes.

(r) Utilize, to the maximum extent feasible, other Federal, State and local, and private resources available for support of the project, prior to use of project funds under this part.

(s) Provide for community participation through, for example, contributions of cash or services, loans of full- or part-time staff, equipment, space, materials, or facilities.

(t) Where the center will provide services through contract or other cooperative arrangements with other providers of services, the center must:

(1) Enter into the contract or arrangement only if the provider of services will provide the services in a timely manner and make the services accessible and acceptable to the population to be served;

(2) Make payment for services so provided only pursuant to agreements with the providers in accordance with a schedule of rates and payment procedures established and maintained by the center. The center must be prepared to substantiate that such rates are reasonable and necessary;

(3) Directly provide at least primary care unless the center has made arrangements for the provision of primary care which include transfer of all medical and financial information relating to such care to the center; and

(4) Enter into contracts or arrangements for the provision of primary health services only if alternative resources are reasonably available to provide these services in the event of termination of such arrangements.

(u) Operate in a manner such that no migratory or seasonal agricultural worker or member of their family will be denied service by reason of his or her inability to pay therefor. *Provided, however,* That a charge for the provision of services will be made to the extent that a third party (including a Government agency) is authorized or is under legal obligation to pay such charges.

§ 56.304 Governing board.

The governing board of the center must meet the following requirements:

(a) *Size.* The board must consist of at least 9 but not more than 25 members except that this provision may be waived by the Secretary for good cause shown.

(b) *Composition.* (1) A majority of the board members must be migratory and seasonal agricultural workers and members of their families who are or will be served by the center and who, as a group, represent the individuals being or to be served in terms of demographic factors, such as race, ethnicity, and sex.

(2) No more than two-thirds of the remaining members of the board may be individuals who derive more than 10 percent of their annual income from the health care industry.

(3) The remaining members of the board must be representatives of the community in which the center's catchment area is located and shall be selected for their expertise in relevant subject areas, such as community affairs, local government, finance and banking, legal affairs, trade unions, and other commercial and industrial concerns, or social services within the community.

(4) No member of the board shall be an employee of the center, or spouse or child, parent, brother or sister by blood of marriage of such an employee. The project director may be a nonvoting, ex-officio member of the board.

(c) *Selection of members.* The method of selection must be prescribed in the by-laws or other internal governing rules of the center. Such by-laws or other rules must specify a process of selection of individuals on the governing board who represent the population served or to be served by the center so that such individuals, as a group, are representative of such population. Such process of selection in the by-laws or other rules is subject to approval by the Secretary.

(d) *Functions and responsibilities.* (1) The governing board shall have authority for the establishment of policy in the conduct of the center.

(2) The governing board shall hold regularly scheduled meetings, at least once each month, except for periods of the year, as specified in the bylaws, during which monthly meetings are not practical due to migration out of the catchment area.

(3) Minutes must be kept for all regularly scheduled meetings of the board.

(4) The governing board shall have specific responsibility for:

(i) Approval of the selection and dismissal of the project director or chief executive officer of the center;

(ii) Establishing personnel policies and procedures, including selection and dismissal procedures, salary and benefit scales;

(iii) The development of bylaws which specify the responsibility of the board and principal operating officials of the centers;

(iv) Adopting policy for financial management practices, including a system to assure accountability for center resources, approval of the annual project budget, center priorities, eligibility for services, including criteria for partial payment schedules, and long-range financial planning;

(v) Evaluating center activities, including services utilization patterns, productivity of the center, patient satisfaction, achievement of project objectives, and development of a process for hearing and resolving patient grievances;

(vi) Assuring that the center is operated in compliance with applicable Federal, State, and local laws and regulations; and

(vii) Adopting health care policies including scope and availability of services, location and hours of services, and quality assurance procedures.

§ 56.305 Grant evaluation and award.

(a) Within the limits of funds determined by the Secretary to be available for such purpose, the Secretary may award grants under this subpart to applicants therefor which, in his judgment, will provide needed health services in a catchment area which will not be served by another project funded under this part and meet the applicable requirements of section 319(d)(1)(A) of the Act and this part, in accordance with priorities established pursuant to section 319(b) of the Act and § 56.107 of subpart A of this part: *Provided,* That in the case of applicants which propose to serve substantially the same catchment area or where available funds are insufficient to fund all approvable applications within a priority category specified in § 56.107, the Secretary will award grants to the applicants which, in his judgment, will best promote the purpose of section 319(d)(1)(A) of the Act and the applicable regulations of this part, taking into account with respect to each application:

(1) The extent to which the project would provide for the elements set forth in § 56.303;

(2) The capability of the applicant to provide quality health care services;

(3) The soundness of the financial management plan for assuring effective utilization of grant funds and maximizing non-grant revenue;

(4) The administrative and management capability of the applicant;

(5) The capability of the applicant to provide primary health services directly. In evaluating the relative capability of the applicant to provide such services directly, the Secretary shall take into consideration whether the direct provision of such services is inappropriate because:

(i) Provision of such services through contract or other arrangement would be more cost-effective;

(ii) Provision of such services directly would unnecessarily duplicate existing resources; or

(iii) Provision of such services other than directly would enhance the accessibility or acceptability of such services to the population to be served.

(6) The degree to which the applicant intends to integrate services supported by a grant under this part with health services provided under other federally assisted health services or reimbursement programs or projects;

(7) The extent that community resources will be utilized by the project; and

(8) Consistent with the other requirements of this part, the degree to which

and the manner in which the applicant provides specific health services which the Secretary has, through publication of a notice in the FEDERAL REGISTER, established as services which should receive emphasis by applicants.

Subpart D—Grants for Operating Migrant Health Entities

§ 56.401 Applicability.

The regulations of this subpart, in addition to the regulations of subpart A of this part, are applicable to grants awarded pursuant to section 319(d)(1)(B) of the Act for the costs of operation of entities which intend to become migrant health centers and which provide health services to migratory agricultural workers, seasonal agricultural workers, and the members of their families in high impact areas.

§ 56.402 Application.

To be approved by the Secretary under this subpart, an application for a grant must, in addition to meeting the requirements of § 56.104 of subpart A of this part,

(a) Be submitted by an entity which the Secretary determines intends to become a migrant health center but which will not, at the time of the grant award, meet one or more of the requirements of paragraphs (a) through (l) of § 56.303 of subpart C of this part; and

(b) Contain information sufficient to enable the Secretary to determine that the project for which the grant is sought will meet the requirements of this part. Such information must include a plan which identifies which requirements of § 56.303 will not be met at the time of grant award and provides a timetable for and a detailed statement of the means to be employed in meeting those requirements.

§ 56.403 Project elements.

A project for the operation of a migrant health entity supported under this subpart must:

(a) Meet all of the requirements of § 56.303 of this part, *Provided*, That the project will not be required to meet the requirements of paragraphs (c), (h), (i), or (n) of such section if the Secretary finds that meeting any such requirement is not feasible or practical at the time of grant award.

(b) Provide those services enumerated in § 56.102(g)(1) of subpart A of this part which are specified in the grant award.

(c) Meet the requirements of § 56.303 of subpart C of this part by the end of the period of support under section 319(d)(1)(B) of the Act and this subpart, in accordance with the plan submitted under § 56.402(b) of this subpart.

§ 56.404 Grant evaluation and award.

(a) Within the limits of funds determined by the Secretary to be available for such purposes, the Secretary may award grants under this subpart to applicants therefor which, in his judgment, will provide needed health services in a catchment area not served by another project funded under this part and meet the applicable requirements of section 319(d)(1)(B) of the Act and this part, in accordance with the priorities established pursuant to section 319(b) of the Act and § 56.107 of subpart A of this part; *Provided*, That in the case of applicants which propose to serve substantially the same catchment area or where available funds are insufficient to fund all approvable applications within a priority category specified in § 56.107, the Secretary will award the grant to the applicants which, in his judgment, will best promote the purposes of section 319(d)(1)(B) of the Act and the applicable regulations of this part, taking into account with respect to each application:

(1) The degree to which the project would provide the services enumerated in § 56.102(g)(1) and the feasibility of its providing all of such enumerated services by the end of the period of support under section 319(d)(1)(B) of the Act and this subpart;

(2) The degree to which the applicant intends to integrate services supported by a grant under this subpart with health services provided under other federally assisted health service or reimbursement programs or projects;

(3) The capability of the project to provide quality health care services;

(4) The administrative and management capability of the applicant; and

(5) The capability of the applicant to provide primary health services directly. In evaluating the relative capability of the applicant to provide such services directly, the Secretary shall take into consideration whether the direct provision of services is inappropriate because:

(i) Provision of such services through contract or other arrangement would be more cost-effective;

(ii) Provision of such services directly would unnecessarily duplicate existing resources; or

(iii) Provision of the services other than directly would enhance the accessibility or acceptability of the services to the population served.

(6) The extent to which community resources will be utilized by the project; and

(7) Consistent with the other requirements of this part, the degree to which and the manner in which the applicant provides specific health services which the Secretary has, through publication of a notice in the FEDERAL REGISTER, established as services which should receive emphasis by applicants.

(b) The Secretary shall:

(1) Make no more than two grants for the same entity under section 319(d)(1)(B) of the Act;

(2) Not make any grant under section 319(d)(1)(B) to an entity which, for the same project, has been awarded more than one grant under section 319(c) of the Act;

(3) Not make a grant under section 319(d)(1)(B) to an entity which has been awarded a grant under section 319(d)(1)(A) of the Act.

Subpart E—Grants for Planning and Developing Migrant Health Programs

§ 56.501 Applicability.

The regulations of this subpart, in addition to the regulations of subpart A of this part, are applicable to grants awarded pursuant to section 319(c)(1)(B) of the Act for projects to plan and develop migrant health programs to provide health services to migratory agricultural workers, seasonal agricultural workers and the members of their families in areas in which no migrant health center exists and in which not more than 6,000 migratory agricultural workers and their families reside for more than two months.

§ 56.502 Application.

To be approved by the Secretary under this subpart, an application for a grant must, in addition to meeting the requirements of § 56.104 of subpart A of this part,

(a) Be submitted for a project within a catchment area which

(1) Is not served, in whole or in part, by a migrant health center, and

(2) Has not more than 6,000 migratory agricultural workers and members of their families residing therein for more than 2 months per year; and

(b) Contain information sufficient to enable the Secretary to determine that the project for which the grant is sought will meet the requirements of this part.

§ 56.503 Project elements.

A project for the planning and development of a migrant health program supported under this subpart must:

(a) Determine (by survey or other appropriate means) the approximate number of

(1) Migratory agricultural workers and the members of their families, and

(2) Seasonal agricultural workers and the members of their families within the project's catchment area in the calendar year in which the grant is made and the period of time these workers and their families reside in the catchment area during such year.

(b) Prepare an assessment of need of the population proposed to be served by the migrant health program for the services set forth in § 56.603(a) of subpart F of this part. This assessment of need must, at a minimum, consider the factors listed in § 56.104(b)(3) (i)–(iv).

(c) Design a migrant health program for such population, based on such assessment, which indicates in detail how the proposed program will fulfill the needs identified in that assessment and meet the requirements of subpart F of this part.

(d) Develop a plan for the implementation of the program designed pursuant to paragraph (c) of this section. The implementation plan must provide for the time-phased recruitment and

training of the personnel essential for the operation of a migrant health program and the gradual assumption of operational status of the project so that the project will, in the judgment of the Secretary, meet the requirements of subpart F of this part as of the end of the project period.

(e) Implement the plan developed pursuant to paragraph (d) of this section in accordance with such paragraph.

(f) Make efforts to secure within the proposed catchment area of such project, to the extent possible, financial and professional assistance and support for the project.

(g) Initiate and encourage continuing community involvement in the development and operation of the project through, for example, contributions or loans of cash, services, equipment, full- or part-time staff, space, materials, or facilities.

(h) Provide for sufficient staff, qualified by training and experience, to carry out the project and establish standards and qualifications for personnel (including the project director).

(i) Utilize, to the maximum extent feasible, other Federal, State, local, and private resources available for support of the project, prior to use of project funds under this subpart.

(j) Provide for the means of evaluating the project's progress in achievement of its specific objectives and submission of such progress reports on the project as the Secretary may from time to time request.

§ 56.504 Grant evaluation and award.

(a) Within the limits of funds determined by the Secretary to be available for such purpose, the Secretary may award grants under this subpart to applicants therefor which, in his judgment, will provide needed health services in a catchment area not served by another project funded under this part and meet the applicable requirements of section 319(c)(1)(B) of the Act and this part, in accordance with priorities established pursuant to section 319(b) of the Act and § 56.107 of subpart A of this part; *Provided,* That in the case of applicants which propose to serve substantially the same catchment areas or where available funds are insufficient to fund all approvable applications within a priority category specified in § 56.107,

(1) Priority shall be given to applications submitted by community-based organizations which are representative of the population to be served by the project. For purposes of this paragraph, an applicant shall be deemed to be such an organization if it provides a formal mechanism (such as membership on the organization's governing body or membership on an advisory body) which gives migratory and seasonal agricultural workers and their families significant involvement in the formulation of the organization's policies; and

(2) Where all such applicants are community-based organizations representative of the population to be served by the project, the Secretary shall award the grant to the applicants which will, in his judgment, best promote the purposes of section 319(c)(1)(B) of the Act and the applicable regulations of this part, taking into account with respect to each application:

(i) The degree to which the proposed project satisfactorily provides for the elements set forth in § 56.203;

(ii) The administrative and management capability of the applicant;

(iii) The extent to which community resources will be utilized in the project; and

(iv) The degree to which the applicant intends to integrate services supported by a grant under this part with health services provided under other federally assisted health services or reimbursement programs or projects.

(b) The Secretary shall award no more than one grant under this subpart for the same project.

Subpart F—Grants for Operating Migrant Health Programs

§ 56.601 Applicability.

The regulations of this subpart, in addition to the regulations of subpart A of this part, are applicable to grants awarded pursuant to section 319(d)(1)(C) of the Act for projects for operating programs to provide health services to migratory agricultural workers, seasonal agricultural workers and the members of their families in

areas in which no migrant health center exists and in which not more than 6,000 migratory agricultural workers and their families reside for more than two months.

§ 56.602 Application.

To be approved by the Secretary under this subpart, an application for a grant must, in addition to meeting the requirements of § 56.104 of subpart A of this part,

(a) Be submitted for a project with a catchment area which

(1) Is not served, in whole or in part, by a migrant health center, and

(2) Has not more than 6,000 migratory agricultural workers and the members of their families residing therein for more than two months per year; and

(b) Contain information sufficient to enable the Secretary to determine that the project for which the grant is sought will meet the requirements of this part.

§ 56.603 Project elements.

A project for operating a migrant health program supported under this subpart must:

(a) Provide to migratory and seasonal agricultural workers and the members of their families in its catchment area one or more of the following groups of services so that such services are available and accessible promptly as appropriate, and in a manner which will assure continuity of care, as approved by the Secretary and set forth (including specific services to be provided) in the grant award:

(1) Emergency health care, including diagnostic and treatment services in an ambulatory health care setting or hospital and dental services for the alleviation of acute pain and suffering for medical emergencies, when provision of such services is necessary to avoid jeopardizing the patient's condition until appropriate services from other providers can reasonably be obtained;

(2) Primary care;

(3) Arrangements with existing health care facilities to furnish primary health services (other than primary care);

(4) Other services set forth in § 56.102(g)(1) which are needed to improve the health of such individuals.

(b) Implement a system for maintaining the confidentiality of patient records in accordance with the requirement of § 56.111 of subpart A of this part.

(c) Develop management and control systems which are in accordance with sound financial management procedures, including the provision for an audit conducted in accordance with the DHHS Audit Agency Guide for Audits of Migrant Health Grants, as amended, on at least an annual basis (unless waived for cause by the Secretary), by an independent certified public accountant or public accountant licensed before December 31, 1970, to determine, at a minimum, the fiscal integrity of grant financial transactions and reports and compliance with the regulations of this part and the terms and conditions of the grant.

(d) When the cost of care and services furnished by or through the project is to be reimbursed under title XIX or title XX of the Social Security Act, obtain or make every reasonable effort to obtain a written agreement with the title XIX or title XX State agency for such reimbursement.

(e) Have prepared a schedule of fees or payments for the provision of its services designed to cover its reasonable costs of operation and a corresponding schedule of discounts adjusted on the basis of the patient's ability to pay. The schedule of discounts must provide for a full discount to individuals and families with annual incomes at or below those set forth in the most recent CSA Poverty Income Guidelines (42 CFR 1060.2) (except that nominal fees for service may be collected from individuals and families with annual incomes at or below such levels if imposition of such fees is consistent with project goals) and for no discount to individuals and families with annual incomes greater than twice those set forth in the Guidelines.

(f) Make every reasonable effort, including the establishment of systems for eligibility determination, billing, and collection, to

(1) Collect reimbursement for its costs in providing health services to persons who are entitled to insurance benefits under title XVIII of the Social Security Act, to medical assistance

under a State plan approved under title XIX of such Act, to social services and family planning under title XX of such Act, or to assistance for medical expenses under any other public assistance program, grant program, or private health insurance or benefit program on the basis of the schedule of fees prepared pursuant to paragraph (e) of this section without application of any discounts, and

(2) Secure from patients payments for services in accordance with the schedule of fees and discounts required by paragraph (e) of this section.

(g) Develop an overall financial management plan and an operating budget for the project which include and identify, in accordance with generally accepted accounting principles, all anticipated current income and expense items and capital income and expense items, if any.

(h) Establish basic statistical data, cost accounting, management information, and reporting or monitoring systems which will meet the project's management needs and shall enable the project to provide such statistics and other information as the Secretary may reasonably require relating to the project's costs of operation, patterns of utilization of services, and the availability, accessibility, and acceptability of its services, and to make such reports to the Secretary in a timely manner with such frequency as the Secretary may reasonably require.

(i) Review its catchment area annually to insure that the criteria set out in § 56.104(b)(2) are met and, where such criteria are not met, revise its catchment area, with the approval of the Secretary, to conform with such criteria to the extent feasible.

(j) In the case of a project which serves a population including a substantial proportion of individuals of limited English-speaking ability, have a plan and made arrangements responsive to the needs of these populations for providing services to the extent practicable in the language and cultural context most appropriate to such individuals, and have identified an individual on its staff who is fluent in both that language and in English and whose responsibilities include providing guidance to such individuals and to appropriate staff members with respect to cultural sensitivities and bridging linguistic and cultural differences. If more than one non-English language is spoken by such group or groups, an individual or individuals fluent in those languages and English must be so identified.

(k) Be operated in a manner calculated to preserve human dignity and to maximize acceptability and effective utilization of services.

(l) To the extent possible, coordinate and integrate project activities with the activities of other federally funded, as well as State and local, health services delivery projects and programs serving the same population.

(m) Establish means for evaluating progress toward the achievement of the specific objectives of the project.

(n) Provide sufficient staff, qualified by training and experience, to carry out the activities of the project.

(o) Assure that facilities utilized in the performance of the project meet applicable fire and life safety codes.

(p) Utilize, to the maximum extent feasible, other Federal, State and local, and private resources available for support of the project, prior to use of project funds under this part.

(q) Provide for community participation through, for example, contributions of cash or services, loans of full- or part-time staff, equipment, space, materials, or facilities, and, to the extent feasible, establishment of an advisory council to advise with respect to the overall management of the project including services to be provided, the manner of their provision, and appointment of personnel. The membership of such advisory council shall be representative of the population to be served in terms of appropriate demographic characteristics, such as race, sex, and ethnicity.

(r) Where the project will provide services through contract or other cooperative arrangements with other providers of services, the project must

(1) Enter into any such contract or arrangement only if the provider of services will provide the services in a timely manner and make the services accessible and acceptable to the population to be served; and

(2) Make payment for services so provided in accordance with a schedule of rates and payment procedures established and maintained by the project. The project must be prepared to substantiate that such rates are reasonable and necessary.

(s) Operate in a manner such that no migratory or seasonal agricultural worker or member of their families will be denied service by reason of his or her inability to pay therefor. *Provided, however,* That a charge for the provision of services will be made to the extent that a third party (including a Government agency) is authorized or is under legal obligation to pay such charges.

(t) Have an ongoing quality assurance program as described in § 56.303(c) except as the Secretary finds that such a program would not be feasible.

§ 56.604 Grant evaluation and award.

(a) Within the limit of funds determined by the Secretary to be available the Secretary may award grants under this subpart to applicants therefor which will, in his judgment, provide needed health services in a catchment area which will not be served by another project funded under this part and meet the applicable requirements of section 319(d)(1)(C) of the Act and this subpart, in accordance with priorities established pursuant to section 319(b) of the Act and § 56.107 of subpart A of this part; *Provided,* That in the case of applicants which propose to serve substantially the same catchment areas or where available funds are insufficient to fund all approvable applications within a priority category specified in § 56.107,

(1) Priority shall be given to applications submitted by community-based organizations which are representative of the population to be served by the project. For purposes of this paragraph, an applicant shall be deemed to be such an organization if it provides a formal mechanism (such as membership on the organization's governing body or membership on an advisory body) which gives migratory seasonal agricultural workers and their families significant involvement in the formulation of the organization's policies; and

(2) Where all such applicants are community-based organizations representative of the population to be served by the project, the Secretary shall award the grant to the applicants which will, in his judgment, best promote the purposes of section 319(d)(1)(C) of the Act and the applicable regulations of this part, taking into account with respect to each application:

(i) The degree to which the proposed project satisfactorily provides for the elements set forth in § 56.203;

(ii) The administrative and management capability of the applicant;

(iii) The extent to which community resources will be utilized in the project; and

(iv) The degree to which the applicant intends to integrate services supported by a grant under this part with health services provided under other federally assisted health services or reimbursement programs or projects.

Subpart G—Grants for Technical Assistance

§ 56.701 Applicability.

The regulations of this subpart, in addition to the regulations of subpart A of this part except as otherwise set forth herein, are applicable to grants awarded pursuant to section 319(g) of the Act for the provision of technical and other non-financial assistance to grantees under sections 319(c)(1)(A), 319(d)(1)(A) and 319(d)(1)(B) of the Act.

§ 56.702 Application.

To be approved by the Secretary under this subpart, an application for a grant must meet the requirements of §§ 56.104(a), 56.104(b) (1), (4), (7), (10), and (11), and 56.104(c) of subpart A of this part.

§ 56.703 Project elements.

A project for the provision of technical assistance to migrant health centers and entities which intend to become migrant health centers which is supported under this subpart must:

(a) Provide to such centers and entities as are specified in the grant award, such technical and other nonfinancial assistance (such as fiscal and program management assistance or training of

the staff of such center or entity in such management) as may be specified in the grant award. Such technical or other nonfinancial assistance shall be designed to assist such centers and entities in:

(1) Developing plans for becoming migrant centers; and/or

(2) Meeting the requirements of sections 319(f)(2) of the Act.

(b) Provide such assistance through its own staff or resources.

(c) Where the project will provide training to the staff of a center or entity in management or the provision of health services, provide such training consistent, as applicable, with § 56.108(b)(7).

(d) Maintain such records and make such reports on the expenditure of funds under this subpart and provision of such assistance as the Secretary may require.

§ 56.704 Grant evaluation and award.

Within the limits of funds determined by the Secretary to be available for such purpose, the Secretary may award grants under this subpart to applicants therefor which will, in his judgment, best promote the purposes of section 319(g) of the Act and applicable regulations of this part, taking into consideration:

(a) The cost-effectiveness of the application; and

(b) The number of centers and entities to be served by the applicant.

Subpart H—Acquisition and Modernization of Existing Buildings

§ 56.801 Applicability of 42 CFR part 51c, subpart E.

The provisions of 42 CFR part 51c, subpart E, establishing requirements for the acquisition and modernization of existing buildings, shall apply to all grants under section 319 of the Act for project costs which include the cost of acquisition and/or modernization of existing buildings (including the cost of amortizing the principal of, and paying the interest on, loans); except that, for purposes of this subpart, references within subpart E to part 51c, or to subparts of part 51c, shall be deemed to be references to part 56, or to the appropriate subparts of part 56, and references to section 330 of the Act shall be deemed to be references to section 319 of the Act.

[43 FR 5353, Feb. 7, 1978]

PART 57—GRANTS FOR CONSTRUCTION OF TEACHING FACILITIES, EDUCATIONAL IMPROVEMENTS, SCHOLARSHIPS AND STUDENT LOANS

Subparts A–B [Reserved]

Subpart C—Health Professions Student Loans

57.201 Applicability.
57.202 Definitions.
57.203 Application by school.
57.204 Payment of Federal capital contributions and reallocation of funds remitted to the Secretary.
57.205 Health professions student loan funds.
57.206 Eligibility and selection of health professions student loan applicants.
57.207 Maximum amount of health professions student loans.
57.208 Health professions student loan promissory note and disclosure requirements.
57.209 Payment of health professions student loans.
57.210 Repayment and collection of health professions student loans.
57.211 Cancellation of health professions student loans for disability or death.
57.212 [Reserved]
57.213 Continuation of provisions for cancellation of loans made prior to November 18, 1971.
57.213a Loan cancellation reimbursement.
57.214 Repayment of loans made after November 17, 1971, for failure to complete a program of study.
57.215 Records, reports, inspection, and audit.
57.216 What additional Department regulations apply to schools?
57.216a Performance standard.
57.217 Additional conditions.
57.218 Noncompliance.

Subpart D—Nursing Student Loans

57.301 Applicability.
57.302 Definitions.
57.303 Application by school.
57.304 Payment of Federal capital contributions and reallocation of funds remitted to the Secretary.
57.305 Nursing student loan funds.
57.306 Eligibility and selection of nursing student loan applicants.

57.307 Maximum amount of nursing student loans.
57.308 Nursing student loan promissory note.
57.309 Payment of nursing student loans.
57.310 Repayment and collection of nursing student loans.
57.311 Cancellation of nursing student loans for disability or death.
57.312 Repayment of loans for service in a shortage area.
57.313 Loan cancellation for full-time employment as a registered nurse.
57.313a Loan cancellation reimbursement.
57.314 Repayment of loans made after November 17, 1971, for failure to complete a program of study.
57.315 Records, reports, inspection, and audit.
57.316 What additional Department regulations apply to schools?
57.316a Performance standard.
57.317 Additional conditions.
57.318 Noncompliance.

Subpart E—Grants for Construction of Nurse Training Facilities

57.409 Good cause for other use of completed facility.

Subpart F—Grants for Nurse Anesthetist Traineeships

57.501 To what programs do these regulations apply?
57.502 Definitions.
57.503 Who is eligible to apply for a grant?
57.504 How will applications be evaluated?
57.505 How long does grant support last?
57.506 How is the amount of the award determined?
57.507 For what purposes may grant funds be spent?
57.508 What financial support is available to trainees?
57.509 Who is eligible for financial assistance as a trainee?
57.510 What are the requirements for traineeships and the appointment of trainees?
57.511 Duration of traineeships.
57.512 Termination of traineeships.
57.513 What additional Department regulations apply to grantees?
57.514 Additional conditions.

Subpart G [Reserved]

Subpart H—Grants for Physician Assistant Training Programs

57.701 Applicability.
57.702 Definitions.
57.703 Eligibility.
57.704 Application.
57.705 Project requirements.
57.706 Evaluation of applications.
57.707 Grant award.
57.708 Grant payments.
57.709 Purposes for which grant funds must be spent.
57.710 What additional Department regulations apply to grantees?
57.711 What other audit and inspection requirements apply to grantees?
57.712 Additional conditions.

Subpart I—Programs for the Training of Physician Assistants

57.801 Purpose and scope.
57.802 Definitions.
57.803 Requirements.

Subparts J–K [Reserved]

Subpart L—Grants for Residency Training and Advanced Education in the General Practice of Dentistry

57.1101 To what projects do these regulations apply?
57.1102 Definitions.
57.1103 What entities are eligible to apply for a grant?
57.1104 How must an entity apply for a grant?
57.1105 What requirements must a project meet?
57.1106 How will applications be evaluated?
57.1107 How will grant awards be made?
57.1108 How will grant payments be made?
57.1109 Purposes for which grant funds may be spent.
57.1110 What additional Department regulations apply to grantees?
57.1111 What other audit and inspection requirements apply to grantees?
57.1112 What additional conditions apply to grantees?

Subparts M–O [Reserved]

Subpart P—Loan Guarantees and Interest Subsidies to Assist in Construction of Teaching Facilities for Health Profession Personnel

57.1501 Applicability.
57.1502 Definitions.
57.1503 Eligibility.
57.1504 Application.
57.1505 Approval of applications.
57.1506 Priority.
57.1507 Limitations applicable to loan guarantee.
57.1508 Amount of interest subsidy payments; limitations.
57.1509 Forms of credit and security instruments.
57.1510 Security for loans.
57.1511 Opinion of legal counsel.
57.1512 Length and maturity of loans.

57.1513 Repayment.
57.1514 Loan guarantee and interest subsidy agreements.
57.1515 Loan closing.
57.1516 Right of recovery–subordination.
57.1517 Waiver of right of recovery.
57.1518 Modification of loans.

Subpart Q—Grants for Predoctoral, Graduate, and Faculty Development Education Programs in Family Medicine

57.1601 To what programs do these regulations apply?
57.1602 Definitions.
57.1603 Who is eligible to apply for a grant?
57.1604 What requirements must a project meet?
57.1605 How will applications be evaluated?
57.1606 How long does grant support last?
57.1607 For what purposes may grant funds be spent?
57.1608 What additional Department regulations apply to grantees?
57.1609 What other audit and inspection requirements apply to grantees?
57.1610 Additional conditions.

Subpart R—Grants for the Establishment of Departments of Family Medicine

57.1701 To what programs do these regulations apply?
57.1702 Definitions.
57.1703 Who is eligible to apply for a grant?
57.1704 Program requirements.
57.1705 How will applications be evaluated?
57.1706 How long does grant support last?
57.1707 For what purposes may grant funds be spent?
57.1708 What additional Department regulations apply to grantees?
57.1709 What other audit and inspection requirements apply to grantees?
57.1710 Additional conditions.

Subpart S—Educational Assistance to Individuals From Disadvantaged Backgrounds

57.1801 To what grant program do these regulations apply?
57.1802 Definitions.
57.1803 Who is eligible to apply for a grant?
57.1804 Who is eligible for educational assistance?
57.1805 Program requirements.
57.1806 How will applications be evaluated?
57.1807 How long does grant support last?
57.1808 For what purposes may grant funds be spent?
57.1809 What additional Department regulations apply to grantees?
57.1810 What other audit and inspection requirements apply to grantees?
57.1811 Additional conditions.

Subpart T [Reserved]

Subpart U—Armed Forces Health Professions Scholarship Program

57.2001 Applicability.
57.2002 Definitions.
57.2003 Determinations of increased enrollment solely for the program.

Subpart V—Grants for Centers of Excellence

57.2101 To what projects do these regulations apply?
57.2102 Definitions.
57.2103 Who is eligible to apply for a grant?
57.2104 Project requirements.
57.2105 How will applications be evaluated?
57.2106 How long does grant support last?
57.2107 For what purposes may grant funds be spent?
57.2108 What additional Department regulations apply to grantees?
57.2109 What other audit and inspection requirements apply to grantees?
57.2110 Additional conditions.

Subpart W—Physician Shortage Area Scholarship Grants

57.2201 Applicability.
57.2202 Definitions.
57.2203 Eligibility.
57.2204 Application.
57.2205 Priority for selection of scholarship recipients.
57.2206 Grant award.
57.2207 Amount of scholarship grant.
57.2208 Payment of scholarship grant.
57.2209 Conditions of scholarship grant.
57.2210 Failure to comply.
57.2211 Waiver or suspension.

Subpart X [Reserved]

Subpart Y—Grants for Nurse Practitioner and Nurse Midwifery Programs

57.2401 Applicability.
57.2402 Definitions.
57.2403 Eligibility.
57.2404 Application.
57.2405 Project requirements.
57.2406 Evaluation and grant awards.
57.2407 Grant payments.
57.2408 Expenditure of grant funds.
57.2409 What additional Department regulations apply to grantees?
57.2410 Additional conditions.
APPENDIX TO SUBPART Y—GUIDELINES FOR NURSE PRACTITIONER AND NURSE MIDWIFERY PROGRAMS

Subpart Z—Grants for Advanced Nurse Education Programs

57.2501 Applicability.
57.2502 Definitions.
57.2503 Eligibility.
57.2504 Application.
57.2505 Project requirements.
57.2506 Evaluation and grant awards.
57.2507 Grant payments.
57.2508 Expenditure of grant funds.
57.2509 What additional Department regulations apply to grantees?
57.2510 Additional conditions.

Subparts AA–BB [Reserved]

Subpart CC—Scholarships for Students of Exceptional Financial Need

57.2801 To what programs do these regulations apply?
57.2802 Definitions.
57.2803 How to apply for a grant.
57.2804 Students eligible for scholarships.
57.2805 Amount of scholarship award.
57.2806 How is the amount of grant award determined?
57.2807 For what purposes may grant funds be spent?
57.2808 What additional Department regulations apply to grantees?
57.2809 What other records, audit, and inspection requirements apply to grantees?
57.2810 Additional conditions.

Subpart DD—Financial Assistance for Disadvantaged Health Professions Students

57.2901 To what program do these regulations apply?
57.2902 Definitions.
57.2903 How to apply for a grant.
57.2904 Eligibility and selection of aid recipients.
57.2905 Amount of student award.
57.2906 How is the amount of the grant award determined?
57.2907 For what purposes may grant funds be spent?
57.2908 What additional Department regulations apply to grants?
57.2909 What other records, audit, and inspection requirements apply to schools?
57.2910 Additional conditions.

Subpart EE—Grants for Residency Training in Preventive Medicine

57.3001 To what programs do these regulations apply?
57.3002 Definitions.
57.3003 Who is eligible to apply for a grant?
57.3004 Project requirements.
57.3005 How will applications be evaluated?
57.3006 How long does grant support last?
57.3007 How is the amount of the grant award determined?
57.3008 For what purposes may grant funds be spent?
57.3009 What additional Department regulations apply to grantees?
57.3010 What other audit and inspection requirements apply to grantees?
57.3011 Additional conditions.

Subpart FF—Grants for Residency Training and Faculty Development in General Internal Medicine and/or General Pediatrics

57.3101 To what projects do these regulations apply?
57.3102 Definitions.
57.3103 Who is eligible to apply for a grant?
57.3104 What activities must be addressed in an application?
57.3105 Project requirements.
57.3106 How will applications be evaluated?
57.3107 How long does grant support last?
57.3108 How is the amount of the grant award determined?
57.3109 For what purposes may grant funds be spent?
57.3110 What additional Department regulations apply to grantees?
57.3111 What other audit and inspection requirements apply to grantees?
57.3112 Additional conditions.

Subpart GG—Payment for Tuition and Other Educational Costs

57.3201 To which programs do these regulations apply?
57.3202 How will allowable increases be determined?

Subparts HH–LL [Reserved]

Subpart MM—Area Health Education Center Program

57.3801 To what programs do these regulations apply?
57.3802 Definitions.
57.3803 Who is eligible to apply for a cooperative agreement?
57.3804 Project requirements.
57.3805 When do the requirements of §57.3804 apply?
57.3806 How will applications be evaluated?
57.3807 How is the amount of the award determined?
57.3808 How long does support under a cooperative agreement last?
57.3809 For what purposes may cooperative agreement funds be spent?
57.3810 How will the Department participate in a cooperative agreement?
57.3811 What additional Department regulations apply to awardees?

57.3812 What other audit and inspection requirements apply?
57.3813 Additional conditions.

Subpart NN [Reserved]

Subpart OO—Grants for Geriatric Education Centers

57.4001 To what projects do these regulations apply?
57.4002 Definitions.
57.4003 Who is eligible to apply for a grant?
57.4004 Program requirements.
57.4005 How will applications be evaluated?
57.4006 How long does grant support last?
57.4007 For what purposes may grant funds be spent?
57.4008 What additional Department regulations apply to grantees?
57.4009 What other audit and inspection requirements apply to grantees?
57.4010 Additional conditions.

Subpart PP—Grants for Faculty Training Projects in Geriatric Medicine and Dentistry

57.4101 To what projects do these regulations apply?
57.4102 Definitions.
57.4103 Who is eligible to apply for a grant?
57.4104 For what projects may grant funds be requested?
57.4105 Project requirements.
57.4106 How will applications be evaluated?
57.4107 How long does grant support last?
57.4108 What financial support is available to fellows?
57.4109 Who is eligible for financial assistance as a fellow?
57.4110 What are the requirements for fellowships and the appointment of fellows?
57.4111 Termination of fellowships.
57.4112 For what purposes may grant funds be spent?
57.4113 What additional Department regulations apply to grantees?
57.4114 What other audit and inspection requirements apply to grantees?
57.4115 Additional conditions.

Subparts A–B [Reserved]

Subpart C—Health Professions Student Loans

AUTHORITY: Sec. 215 of the Public Health Service Act, 58 Stat. 690, as amended, 63 Stat. 35 (42 U.S.C. 216); secs. 740–747 of the Public Health Service Act, 77 Stat. 170–173, as amended by 90 Stat. 2266–2268, 91 Stat. 390–391, 95 Stat. 920, 99 Stat. 532–536, and 102 Stat. 3125 (42 U.S.C. 294m-q); renumbered as secs. 721–735, as amended by Pub. L. 102–408, 106 Stat. 2011–2022 (42 U.S.C. 292q—292y).

SOURCE: 44 FR 29055, May 18, 1979, unless otherwise noted.

§ 57.201 Applicability.

The regulations of this subpart apply to the federal capital contributions made by the Secretary to public or other nonprofit health professions schools for the establishment of health professions student loan funds and to loans made to students by schools from these funds.

§ 57.202 Definitions.

As used in this subpart:

Act means the Public Health Service Act, as amended.

Date upon which a student ceases to be a full-time student means the first day of the month which is nearest to the date upon which an individual ceases to be a full-time student as defined in this section.

Default means the failure of a borrower of a loan made under this subpart to make an installment payment when due, or comply with any other term of the promissory note for such loan, except that a loan made under this subpart shall not be considered to be in default if the loan is discharged in bankruptcy, the borrower's repayment schedule has been renegotiated and the borrower is complying with the renegotiated schedule, or the loan is in forbearance.

Federal capital loan means a loan made by the Secretary to a school under section 744(a) of the Act, as in effect prior to October 1, 1977, the proceeds of which are to be returned to the Secretary.

Full-time student means a student who is enrolled in a health professions school and pursuing a course of study which is a full-time academic workload, as determined by the school, leading to a degree specified in section 722(b) of the Act.

Grace period means the period of 1 year beginning on the date upon which a student ceases to be a full-time student at a school of medicine, osteopathic medicine, dentistry, pharmacy, podiatric medicine, optometry, or veterinary medicine.

Health professions school or *school*, for purposes of this subpart, means a public or private nonprofit school of medicine, school of dentistry, school of osteopathic medicine, school of pharmacy, school of podiatric medicine, school of optometry, or school of veterinary medicine as defined in section 799(1)(A) of the Act.

Health professions student loan means the amount of money advanced to a student by a school from a health professions student loan fund under a properly executed promissory note.

Institutional capital contribution means the money provided by a school, in an amount not less than one-ninth of the federal capital contribution, and deposited in a health professions student loan fund.

National of the United States means: (1) A citizen of the United States, or (2) a person who, though not a citizen of the United States, owes permanent allegiance to the United States, as defined in the Immigration and Nationality Act, at 8 U.S.C. section 1101(a)(22).

School year means the traditional approximately 9-month September to June annual session. For the purpose of computing school year equivalents for students who, during a 12-month period, attend for a longer period than the traditional school year, the school year will be considered to be 9 months in length.

Secretary means the Secretary of Health and Human Services and any other officer or employee of the Department of Health and Human Services to whom the authority involved has been delegated.

State means, in addition to the several States, the District of Columbia, the Commonwealth of Puerto Rico, the Commonwealth of the Northern Mariana Islands, the Virgin Islands, Guam, American Samoa, the Republic of Palau, the Republic of the Marshall Islands, and the Federated States of Micronesia.

[44 FR 29055, May 18, 1979, as amended at 52 FR 20987, June 3, 1987; 53 FR 46549, Nov. 17, 1988; 56 FR 19293, Apr. 26, 1991; 56 FR 25446, June 4, 1991; 61 FR 6123, Feb. 16, 1996]

§ 57.203 Application by school.

(a) Each school seeking a Federal capital contribution must submit an application at the time and in the form and manner that the Secretary may require. The application must be signed by an individual authorized to act for the applicant and to assume on behalf of the applicant the obligations imposed by the statute, the regulations of this subpart, and the terms and conditions of the award.

(b) Each application will be reviewed to determine eligibility and the reasonableness of the amount of Federal support requested. The Secretary may require the applicant to submit additional data for this purpose.

(c) An application will not be approved unless an agreement between the Secretary and the applicant school for a Federal capital contribution under section 721 of the Act is reached.

[44 FR 29055, May 18, 1979, as amended at 49 FR 38112, Sept. 27, 1984; 56 FR 19293, Apr. 26, 1991; 57 FR 45734, Oct. 5, 1992; 61 FR 6123, Feb. 16, 1996]

§ 57.204 Payment of Federal capital contributions and reallocation of funds remitted to the Secretary.

(a) *Annual payment.* The Secretary will make payments to each school with which he or she has entered into an agreement under the Act at a time determined by him or her. If the total of the amounts requested for any fiscal year by all schools for Federal capital contributions exceeds the amount of Federal funds determined by the Secretary at the time of payment to be available for this purpose, the payment to each school will be reduced to whichever is smaller:

(1) The amount requested in the application, or

(2) An amount which bears the same ratio to the total amount of Federal funds determined by the Secretary at the time of payment to be available for that fiscal year for the Health Professions Student Loan Program as the number of full-time students estimated by the Secretary to be enrolled in that school bears to the estimated total number of full-time students in all participating schools during that year. Amounts remaining after these payments are made will be distributed in

accordance with this paragraph among schools whose applications requested more than the amount paid to them, but with whatever adjustments that may be necessary to prevent the total paid to any school from exceeding the total requested by it.

(b) *Method of payment.* The payment of Federal capital contributions to a school will be paid in a manner that avoids unnecessary accumulations of money in any health professions student loan fund.

(c) *Reallocation of funds remitted to the Secretary.* All funds from a student loan fund established under this subpart which are remitted to the Secretary in any fiscal year shall be available for allotment under this subpart, in the same fiscal year and the succeeding fiscal year, to schools which, during the period beginning on July 1, 1972, and ending on September 30, 1985, established student loan funds with Federal capital contributions under this subpart. The Secretary will from time to time set dates by which the schools must file applications to receive a portion of these funds. If the total of the amounts requested for any fiscal year by eligible schools exceeds the amount of funds determined by the Secretary at the time of payment to be available for this purpose, the payment to each school will be reduced to whichever is smaller:

(1) The amount requested in the application, or

(2) An amount which bears the same ratio to the total amount of returned funds determined by the Secretary at the time of payment to be available for that fiscal year for the Health Professions Student Loan program as the number of full-time students estimated by the Secretary to be enrolled in that school bears to the estimated total number of full-time students in all eligible schools during that year.

Amounts remaining after these payments are made will be distributed in accordance with this paragraph among schools whose applications requested more than the amount paid to them, with whatever adjustments may be necessary to prevent the total paid to any school from exceeding the total requested by it.

[44 FR 29055, May 18, 1979, as amended at 53 FR 46549, Nov. 17, 1988; 56 FR 19293, Apr. 26, 1991]

§ 57.205 Health professions student loan funds.

(a) *Funds established with Federal capital contributions.* Any fund established by a school with Federal capital contributions will be accounted for separately from other funds, providing a clear audit trail for all transactions. At all times the fund must contain monies representing the institutional capital contribution. The school must at all times maintain all monies relating to the fund in one or more interest-bearing accounts or investment instruments which meet OMB requirements established for Federal monies held by third parties. The school must place all earnings into the fund but may first deduct from total earnings any reasonable and customary charges incurred through the use of an interest-bearing account. An institution shall exercise the level of care required of a fiduciary with regard to these deposits and investments, and shall be responsible for reimbursing the fund for any losses that occur due to the use of investments that are not federally insured.

(1) The Federal capital contribution fund is to be used by the school only for:

(i) Health professions student loans to full-time students;

(ii) Capital distribution as provided in section 728 of the Act or as agreed to by the school and the Secretary; and

(iii) Costs of litigation, costs associated with membership in credit bureaus, and to the extent specifically approved by the Secretary, other collection costs that exceed the usual expenses incurred in the collection of health professions student loans.

(2) A school must review the balance in the fund on at least a semi-annual basis to determine whether the fund balance compared with projected levels of expenditures and collections exceeds its needs. A school in closing status must review the balance in the fund on a quarterly basis. Monies identified as in excess of the school's needs must be

reported, and the Federal share returned to the Federal Government, by the due date of the required report which identifies the excess monies. The school's determination is subject to the review and approval of the Secretary.

(b) *Funds established with Federal capital loans.* (1) Each Federal capital loan is subject to the terms of the promissory note executed by an authorized official on behalf of the borrowing school.

(2) The Federal capital loans must be carried in a special account of the school, to be used by the school only for (i) repayments of principal and interest on Federal capital loans; and (ii) costs of litigation; costs associated with membership in credit bureaus; and, to the extent specifically approved by the Secretary, other collection costs that exceed the usual expenses incurred in the collection of health professions student loans.

(c) Failure to comply with the requirements of this section will subject a school to the noncompliance provisions of § 57.218 and the Department's Claims Collections regulations (45 CFR part 30), as appropriate.

(Approved by the Office of Management and Budget under control number 0915–0047)

[44 FR 29055, May 18, 1979, as amended at 48 FR 25069, June 3, 1983; 56 FR 40725, Aug. 15, 1991; 61 FR 6123, Feb. 16, 1996]

§ 57.206 Eligibility and selection of health professions student loan applicants.

(a) *Determination of eligibility.* (1) Applicants are eligible for consideration for a health professions student loan if they are:

(i) Residents of the United States and either a citizen or national of the United States, an alien lawfully admitted for permanent residence in the United States, a citizen of the Commonwealth of the Northern Mariana Islands, a citizen of the Republic of Palau, a citizen of the Republic of the Marshall Islands, or a citizen of the Federated States of Micronesia;

(ii) Enrolled, or accepted for enrollment in the school as full-time students;

(iii) In need of the amount of the loan to pursue a full-time course of study at the school;

(iv) Of exceptional financial need in the case of students of medicine or osteopathic medicine. A student will be considered to demonstrate exceptional financial need if the school determines that his or her resources, as described in paragraph (b)(1) of this section, do not exceed the lesser of $6,700 or one-half of the costs of attendance at the school. Summer earnings, educational loans, veterans (G.I.) benefits and earnings during the school year will not be considered as resources in determining whether an applicant meets the eligibility criteria for exceptional financial need, but will be considered in determining the amount of funds a student may receive; and

(v) In compliance with the requirement to register for the draft, if required to do so under section 3 of the Military Selective Service Act.

(2) An applicant who has previously attended an institution of higher education must submit a financial aid transcript which includes at least the following data:

(i) Applicant's name and social security number;

(ii) Amounts and sources of loans and grants previously received by the applicant for study at an institution of higher education;

(iii) Whether the applicant is in default on any of these loans, or owes a refund on any grants;

(iv) Certification from each institution previously attended by the applicant that the applicant has received no financial aid, if applicable; and

(v) From each institution previously attended, the signature of an official authorized by the institution to sign such transcripts on behalf of the institution.

(b) *Selection of applicants.* The school will select qualified applicants, including medical (M.D. and D.O.) applicants, and determine the amount of student loans by considering:

(1) The financial resources available to the student by using one of the national need analysis systems or any other procedure approved by the Secretary of Education in combination with other information which the school has regarding the student's financial status. The school must take

into account, regardless of the tax status of the student, the expected contribution from parents, spouse, self or other family members; and

(2) The costs reasonably necessary for the student's attendance at the school, including any special needs and obligations which directly affect the student's ability to attend the school on a full-time basis. The school must document the criteria used for determining these costs.

(c) *Selection of medical (M.D. and D.O.) student applicants.* In addition to the factors in § 57.206(b), the school must select medical (M.D. and D.O.) students graduating after June 30, 1979, based on the order of greatest need, taking into consideration the other resources available to the student through the school. For purposes of establishing priority for selecting medical (M.D. and D.O.) student applicants to receive health professions student loans, summer earnings, educational loans, veterans (G.I.) benefits, and earnings during the school year will be considered as financial resources.

(d) *Verification of loan information.* The school must verify, to the best of its ability, the information provided by the student on the loan application. To comply with this requirement, a school may require that a student provide, for example: Photocopies of the parents', student's, and spouse's Federal income tax forms with original signatures for the most recent tax year (or certification that no Federal income tax return was filed); tax returns that are certified as having been received by the Internal Revenue Service; or other documentation that the school considers necessary to help assure that information on the loan application is correct.

(Approved by the Office of Management and Budget under control number 0915–0047)

[44 FR 32698, June 7, 1979, as amended at 48 FR 25069, June 3, 1983; 49 FR 38112, Sept. 27, 1984; 52 FR 20987, June 3, 1987; 53 FR 46549, Nov. 17, 1988; 56 FR 19293, Apr. 26, 1991; 61 FR 6123, Feb. 16, 1996]

§ 57.207 Maximum amount of health professions student loans.

The total of the health professions student loans made from the fund to any student for a school year may not exceed $2,500 and the cost of tuition. The maximum amount loaned during a 12-month period to any student enrolled in a school which provides a course of study longer than the 9-month school year may be proportionately increased.

§ 57.208 Health professions student loan promissory note and disclosure requirements.

(a) *Promissory note form.* Each health professions student loan must be evidenced by a properly executed promissory note in a form approved by the Secretary. The school must safeguard the promissory note against fire, theft, and tampering.

(1) Each promissory note must state that the loan will bear interest on the unpaid balance computed only for periods during which repayment of the loan is required, at the rate of 5 percent per year.

(2) Each promissory note must contain an acceleration clause provided by the Secretary, which will permit the acceleration of delinquent loans at the school's option.

(3) A copy of each executed note must be supplied by the school to the student borrower.

(b) *Security.* A school must require security or endorsement if the borrower is a minor and if, under the applicable State law, the note signed by him or her would not create a binding obligation. The school may not require security or endorsement in any other circumstances.

(c) *Disclosure requirements.* (1) For any loan made after June 30, 1986, the school shall, at the time the loan is made, provide the following loan information to the student:

(i) The yearly and cumulative maximum amounts that may be borrowed by the student;

(ii) The terms under which repayment of the loan will begin;

(iii) The maximum number of years in which the loan must be repaid;

(iv) The interest rate that will be paid by the borrower and the minimum amount of the required monthly payment;

(v) The amount of any other fees charged to the borrower by the lender;

(vi) Any options the borrower may have for deferral, cancellation, prepayment, consolidation, or other refinancing of the loan;

(vii) A definition of default on the loan and a specification of the consequences which will result to the borrower if the borrower defaults, including a description of any arrangements which may be made with credit bureau organizations;

(viii) To the extent practicable, the effect of accepting the loan on the eligibility of the borrower for other forms of student assistance; and

(ix) A description of the actions that may be taken by the Federal Government to collect the loan, including a description of the type of information concerning the borrower that the Federal Government may disclose to:

(A) Officers, employees, or agents of the Department of Health and Human Services,

(B) Officers, employees, or agents of schools with which the Secretary has an agreement under this subpart, or

(C) Any other person involved in the collection of a loan under this subpart.

(2) For any loan made after June 30, 1986, the school shall, prior to the borrower's completion or termination of studies at the school, provide the following loan information to the student:

(i) Each amount borrowed by the student under this subpart;

(ii) The total amount borrowed by the student under this subpart; and

(iii) A schedule for the repayment of the amounts borrowed under this subpart, including the number, amount, and frequency of payments to be made.

(3) In addition to the requirements set forth in paragraphs (c)(1) and (c)(2) of this section, the school must comply with the applicable requirements of Truth in Lending Regulation Z (12 CFR part 226).

(Approved by the Office of Management and Budget under control number 0915–0047)

[44 FR 29055, May 18, 1979, as amended at 48 FR 25069, June 3, 1983; 50 FR 34420, Aug. 23, 1985; 52 FR 20987, June 3, 1987; 56 FR 19293, Apr. 26, 1991; 57 FR 45734, Oct. 5, 1992]

§ 57.209 Payment of health professions student loans.

(a) Health professions student loans from any fund may be paid to or on behalf of student borrowers in installments considered appropriate by the school except that a school may not pay to or on behalf of any borrower more during any given installment period (e.g., semester, term, or quarter) than the school determines the student needs for that period.

(b) No payment may be made from a fund to or on behalf of any student borrower if at the time of the payment the borrower is not a full-time student.

§ 57.210 Repayment and collection of health professions student loans.

(a) Each health professions student loan, including accrued interests, will be repayable in equal or graduated periodic installments in amounts calculated on the basis of a 10-year repayment period. Except as otherwise provided in this paragraph, repayment of a loan must begin one year after the student ceases to be a full-time student.

(1) If a borrower reenters the same or another school as a full-time student within the 1-year period, the date upon which interest will accrue and the repayment period will begin will be determined by the date on which the student last ceases to be a full-time student at that school.

(2) The following periods will be excluded from the 10-year repayment period:

(i) All periods for up to a total of 3 years of active duty performed by the borrower as a member of the Army, Navy, Air Force, Marine Corps, Coast Guard, National Oceanic and Atmospheric Administration Corps or the U.S. Public Health Service Corps;

(ii) All periods for up to a total of 3 years of service as a volunteer under the Peace Corps Act;

(iii) All periods of advanced professional training including internships and residencies, except as specified in paragraph (a)(2)(vi) of this section;

(iv) All periods during which the borrower is pursuing a full-time course of study at an eligible health professions school;

(v) A period not in excess of 2 years during which a borrower who is a full-

time student in a health professions school leaves the school, with the intent to return to such school as a full-time student, to engage in a full-time educational activity which is directly related to the health profession for which the individual is preparing. To qualify for such deferment, the full-time educational activity must be one which:

(A) Is part of a joint-degree program or a formal program of joint study in conjunction with the health profession for which the borrower is preparing at the school; or

(B) Is an activity which will enhance the borrower's knowledge and skills in the health profession for which the borrower is preparing at the school, as determined by the school.

The borrower must request such deferment from the school in which he or she is enrolled no later than 60 days prior to leaving such school to engage in the full-time educational activity. The school must then determine, no later than 30 days prior to the borrower's leaving such school, whether the borrower qualifies for such deferment. A borrower who qualifies for this type of deferment receives the grace period upon completion or termination of his or her studies leading to the first professional degree in the health discipline being pursued. If the borrower fails to return to school, the school retroactively must begin the borrower's grace period based on the date the borrower terminated his or her studies at the school, and must begin the repayment period immediately following the end of the grace period; and

(vi) A period not in excess of 2 years during which a borrower who is a graduate of a health professions school participates in:

(A) A fellowship training program which is directly related to the health profession for which the borrower prepared at the school, as determined by the school from which the borrower received his or her loan, and is engaged in by the borrower no later than 12 months after the completion of the borrower's participation in advanced professional training as described in paragraph (a)(2)(iii) of this section, or prior to the completion of such borrower's participation in such training. To qualify for such deferment, the fellowship training program must be one which:

(*1*) Is a full-time activity in research or research training or in health care policy; and

(*2*) Is a formally established fellowship program which was not created for a specific individual; or

(B) A full-time educational activity which is directly related to the health profession for which the borrower prepared at the school, as determined by the school from which the borrower received his or her loan, and is engaged in by the borrower no later than 12 months after the completion of the borrower's participation in advanced professional training as described in paragraph (a)(2)(iii) of this section, or prior to the completion of the borrower's participation in such training. To qualify for such deferment, the full-time educational activity must be one which:

(*1*) Is part of a joint-degree program in conjunction with the health profession for which the borrower prepared at the school; or

(*2*) Is required for licensure, registration, or certification in the health profession for which the borrower received the HPSL loan; or

(*3*) Is a full-time educational program in public health, health administration, or a health care discipline directly related to the health profession for which the borrower received the loan.

(3) To receive a deferment, a borrower must, no later than 30 days prior to the onset of the activity (or no later than 30 days prior to the due date of the first payment if the borrower begins the activity during the grace period), and annually thereafter, provide the lending school with evidence of his or her status in the deferrable activity, and evidence that verifies deferment eligibility of the activity. This evidence must include certification by the Program Director or other authorized official that the borrower's activity meets the deferment requirements. The borrower must also notify the school upon completion or termination of the activity. It is the responsibility of the borrower to provide the lending school

with all required information or other information regarding the requested deferment. The school may deny a request for deferment if it is not filed in accordance with the requirements of this section.

(4) Subject to the provisions of paragraph (b)(3) of this section, a borrower must establish a repayment schedule with the school providing for payments not less often than quarterly. Any borrower whose repayment is delinquent more than 60 days must establish a monthly repayment schedule with the school. However, a borrower may at his or her option and without penalty, prepay all or part of the principal and accrued interest at any time.

(5) A school may grant forbearance whenever extraordinary circumstances such as unemployment, poor health or other personal problems temporarily affect the borrower's ability to make scheduled loan repayments.

(b)(1) Each school at which a fund is established must exercise due diligence in the collection of health professions student loans due the fund. In the exercise of due diligence, a school must follow procedures which are at least as extensive and effective as those used in the collection of other student loan accounts due the school, and must use the steps outlined below in accordance with collection practices which are generally accepted among institutions of higher education:

(i) Conduct and document an entrance interview (individually or in groups) with the borrower prior to disbursing HPSL funds in an academic year. During the entrance interview the school must obtain documentation which indicates that the borrower is aware of the rights and responsibilities associated with HPSL funds and personal information which would assist in locating the borrower if he or she fails to keep the school informed of his or her current address. The requirements of this subparagraph may be met by correspondence, if the school determines that a face-to-face meeting (individually or in groups) is impracticable.

(ii) Conduct and document an exit interview (individually or in groups) with the borrower. During the exit interview, the school must provide each borrower with information necessary to carry out the terms of repayment, remind the borrower of the rights and responsibilities associated with HPSL funds, and update the personal information collected prior to disbursing HPSL funds which would assist in locating the borrower if he or she fails to keep the school informed of his or her current address. If the borrower terminates studies without advance notice, the school must document attempts to inform the borrower of the substance of the exit interview and to secure exit interview information from the borrower by mail.

(iii) Notify the borrower in writing of the impending repayment obligation at least twice during the grace period;

(iv) Notify a borrower who is in deferment status in writing of the impending repayment obligation 1 to 3 months prior to the expiration of the approved period of deferment;

(v) Perform regular billing;

(vi) Follow up past due payments with a series of at least four documented and reasonably spaced attempts to contact the borrower, at least three of which must be in writing at not more than 30-day intervals, prior to the loan becoming 120 days past due, provided that the school has a current address for the borrower;

(vii) Perform address searches when necessary;

(viii) Use collection agents, which may include the use of an internal collection agent;

(ix) Institute legal proceedings against borrowers after all other attempts at collection have failed, unless the school determines, subject to the approval of the Secretary, that such litigation would not be cost-effective; and

(x) Become a member of a credit bureau and notify the credit bureau of accounts past due by more than 120 days.

In place of one or more of the procedures outlined above schools may substitute collection techniques that are equally or more effective, but only after they have demonstrated the effectiveness of the techniques and obtained written approval from the Secretary.

(2) *Late charge.* (i) For any health professions student loan made after June 30, 1969, but prior to October 22,

1985, the school may fix a charge for failure of the borrower to pay all or any part of an installment when it is due and, in the case of a borrower who is entitled to deferment under section 722(c) of the Act for any failure to file timely and satisfactory evidence of the entitlement. The amount of the charge may not exceed $1 for the first month or part of a month by which the installment or evidence is late and $2 for each succeeding month or part of a month. The school may elect to add the amount of this charge to the principal amount of the loan as of the day after the day on which the installment or evidence was due, or to make the amount of the charge payable to the school no later than the due date of the next installment following receipt of the notice of the charge by the borrower.

(ii) For any health professions student loan made on or after October 22, 1985, the school shall assess a charge for failure of the borrower to pay all or any part of an installment when the loan is more than 60 days past due and, in the case of a borrower who is entitled to deferment under section 722(c) of the Act, for any failure to file satisfactory evidence of the entitlement within 60 days of the date payment would otherwise be due. No charge may be made if the loan is less than 61 days past due. The amount of this charge may not exceed an amount equal to 6 percent of the amount due at the time the charge is calculated. The school may elect to add the amount of this charge to the principal amount of the loan as of the day on which the charge is calculated, or to make the amount of the charge payable to the school no later than the due date of the next installment following receipt of the notice of the charge by the borrower.

(3) With respect to any health professions student loan made after June 30, 1969, the school may require the borrower to make payments of at least $15 per month on all outstanding health professions student loans during the repayment period.

(4) A school must, on an annual basis, review and assess the collectibility of any loan more than 3 years past due. If the school determines that the prospects of future collection are promising enough to justify periodic review of the debt, and neither the statute of limitations nor the 10-year repayment period has expired, the school may retain the account for continued collections, provided that it makes an attempt at least semi-annually to collect from the borrower. When the due diligence procedures required by paragraph (b)(1) of this section have been exhausted, the school is responsible for determining the collection methods it will use for the semi-annual collection effort required on these loans. If the school determines that the prospects of future collection are not promising, or when the statute of limitations or the 10-year repayment period has expired, the loan must be considered uncollectible. A school may determine a loan to be uncollectible sooner than 3 years past due when it has evidence that the loan cannot be collected, but in no case should a school consider a loan as uncollectible if it has not been in default for a least 120 days. A school is not subject to the requirements in paragraphs (b)(4) (i) and (iii) of this section for loans that became uncollectible, as determined by the school, before August 1, 1985.

(i) A school must request permission to write off an uncollectible loan within 30 days of the determination that it is uncollectible or reimburse the fund in the full amount of the loan, pursuant to §57.210(b)(4)(iii). The 30-day period for submitting the loan for write-off review begins on the date that the determination of uncollectibility is made, in accordance with paragraph (b)(4) of this section. In any instance where the Secretary determines that a school has failed to exercise due diligence in the collection of a loan, in accordance with the applicable regulatory requirements, the school will be required to place in the fund the full amount of principal, interest, and penalty charges that remains uncollected on the loan. Reimbursement must be made by the following June 30 or December 31, whichever is sooner, except that in no case will a school be required to reimburse the fund in less than 30 days following the Secretary's disapproval of the request for write-off approval.

(ii) If the Secretary determines that a school has exercised due diligence in the collection of a loan, in accordance with the applicable regulatory requirements, or if the school determines that the loan was uncollectible prior to August 1, 1985, the school will be permitted to reduce its accounts receivable for the HPSL fund by the full amount of principal, interest, and penalty charges that remains uncollected on that loan and will not be required to return the Federal share of the loss to the Secretary.

(iii) If a school does not request permission to write off an uncollectible loan within the required timeframe, it must reimburse the fund for the full amount of principal, interest, and penalty charges that remains uncollected on that loan. This reimbursement must be made by the following June 30 or December 31, whichever is sooner, except that in no case will a school be required to reimburse the fund in less than 30 days following its determination that a loan is uncollectible.

(iv) Failure to comply with the requirement of this section will subject a school to the noncompliance provisions of § 57.218 and the Department's Claims Collection regulations (45 CFR part 30), as appropriate.

(5) *Disclosure of taxpayer identity information*. Upon written request by the Secretary, the Secretary of the Internal Revenue Service (IRS) may disclose the address of any taxpayer who has defaulted on a health professions student loan, for use only by officers, employees, or agents of the Department, to locate the defaulted borrower to collect the loan. Any such mailing address may be disclosed by the Secretary to any school from which the defaulted borrower received a health professions student loan, for use only by officers, employees, or agents of the school whose duties relate to the collection of health professions student loan funds, to locate the defaulted borrower to collect the loan. Any school which requests and obtains this address information must comply with the requirements of the Secretary and the IRS regarding the safeguarding and proper handling of this information.

(Approved by the Office of Management and Budget under control number 0915–0047)

[44 FR 29055, May 18, 1979, as amended at 48 FR 25069, June 3, 1983; 49 FR 38112, Sept. 27, 1984; 50 FR 34420, Aug. 23, 1985; 52 FR 20988, June 3, 1987; 53 FR 6092, Feb. 29, 1988; 56 FR 19293, Apr. 26, 1991; 56 FR 40726, Aug. 15, 1991; 57 FR 45734, Oct. 5, 1992; 61 FR 6123, Feb. 16, 1996]

§ 57.211 Cancellation of health professions students loans for disability or death.

(a) *Permanent and total disability*. The Secretary will cancel a student borrower's indebtedness in accordance with section 722(d) of the Act if the borrower is found to be permanently and totally disabled on recommendation of the school and as supported by whatever medical certification the Secretary may require. A borrower is totally and permanently disabled if he or she is unable to engage in any substantial gainful activity because of a medically determinable impairment, which the Secretary expects to continue for a long time or to result in death.

(b) *Death*. The Secretary will cancel a student borrower's indebtedness in accordance with section 722(d) of the Act upon the death of the borrower. The school to which the borrower was indebted must secure a certification of death or whatever official proof is conclusive under State law.

(Approved by the Office of Management and Budget under control number 0915–0047)

[44 FR 29055, May 18, 1979, as amended at 56 FR 19293, Apr. 26, 1991; 61 FR 6123, Feb. 16, 1996]

§ 57.212 [Reserved]

§ 57.213 Continuation of provisions for cancellation of loans made prior to November 18, 1971.

Individuals who received health professions student loans as students of medicine, osteopathic medicine, dentistry or optometry prior to November 18, 1971, may still receive cancellation of these loans for practicing in a shortage area or for practicing in a rural shortage area characterized by low family income. The regulations set

forth in 42 CFR 57.215(b) (1976), as adopted on February 7, 1974 remain applicable to cancellation on this basis. The provisions can be found at 39 FR 4774 (February 7, 1974) and a copy can be obtained by writing to the Division of Student Assistance, Bureau of Health Professions, Room 8–34, Parklawn Building, 5600 Fishers Lane, Rockville, MD 20857.

[49 FR 38112, Sept. 27, 1984, as amended at 56 FR 19294, Apr. 26, 1991]

§ 57.213a Loan cancellation reimbursement.

(a) For loans made prior to October 22, 1985, in the event that insufficient funds are available to the Secretary in any fiscal year to enable him or her to pay to all schools their proportionate shares of all loans and interest canceled under this subpart for practice in a shortage area, death, or disability:

(1) Each school will be paid an amount bearing the same ratio to the total of the funds available for that purpose as the principal of loans canceled by that school in that fiscal year bears to the total principal of loans canceled by all schools in that year; and

(2) Any additional amounts to which a school is entitled will be paid by the Secretary at the time of distribution of the assets of the school's Fund under section 728 of the Act.

(b) For loans made on or after October 22, 1985, a school may assess the borrower a charge to insure against the loss of the institutional share of a loan canceled due to the borrower's death or permanent and total disability. The school must develop annually a rate which reflects its cancellation experience. This charge shall not exceed .6 percent of the loan amount. Funds collected under this provision must be maintained by the school in an insured, interest-bearing account (with any earned interest credited to this insurance fund), and used only to reimburse the school for the institutional share of any HPSL loan made on or after October 22, 1985, that is canceled due to the borrower's death or permanent and total disability. A school is not required to establish a separate bank account, but is required to maintain separate accountability.

[53 FR 46549, Nov. 17, 1988, as amended at 56 FR 19294, Apr. 26, 1991; 57 FR 45734, Oct. 5, 1992; 61 FR 6123, Feb. 16, 1996]

§ 57.214 Repayment of loans made after November 17, 1971, for failure to complete a program of study.

In the event that the Secretary undertakes to repay educational loans under section 722(k) of the Act, he or she will use the following criteria to make a determination as to each applicant's eligibility:

(a) An applicant will be considered to have failed to complete the course of study leading to the first professional degree for which an eligible education loan was made upon certification by a health professions school that the individual ceased to be enrolled in the school subsequent to November 17, 1971;

(b) An applicant will be considered to be in exceptionally needy circumstances if, upon comparison of the income and other financial resources of the applicant with his or her expenses and financial obligations, the Secretary determines that repayment of the loan would constitute a serious economic burden on the applicant. In making this determination, the Secretary will take into consideration the applicant's net financial assets, his or her potential earning capacity, and the relationship of the income available to the applicant to the low-income levels published annually by the Secretary under paragraph (c) of this section;

(c) An applicant will be considered to be from a low-income family if the applicant comes from a family with an annual income below a level based on low-income thresholds according to family size published by the U.S. Bureau of the Census, adjusted annually for changes in the Consumer Price Index, and adjusted by the Secretary for use in this program, and the family has no substantial net financial assets. Income levels as adjusted will be published annually by the Secretary in the FEDERAL REGISTER.

(d) An applicant will be considered to be from a disadvantaged family if the individual comes from a family in which the annual income minus unusual expenses which contribute to the

economic burdens borne by the family does not exceed the low-income levels published by the Secretary under paragraph (c) of this section and the family has no substantial net financial assets;

(e) An applicant will be considered as not having resumed his or her health professions studies within two years following the date the individual ceased to be a student upon a certification so stating from the applicant; and

(f) An applicant will be considered as not reasonably expected to resume his or her health professions studies within two years following the date upon which he or she terminated these studies, based upon consideration of the reasons for the applicant's failure to complete these studies, taking into account such factors as academic, medical, or financial difficulties.

The Secretary will only repay education loans made subsequent to November 17, 1971.

[44 FR 29055, May 18, 1979, as amended at 61 FR 6123, Feb. 16, 1996; 61 FR 9532, Mar. 8, 1996]

§ 57.215 Records, reports, inspection, and audit.

(a) Each Federal capital contribution and Federal capital loan is subject to the condition that the school must maintain those records and file with the Secretary those reports relating to the operation of its health professions student loan funds as the Secretary may find necessary to carry out the purposes of the Act and these regualtions. A school must submit required reports to the Secretary within 45 days of the close of the reporting period.

(1) A school which fails to submit a required report for its Federal capital contribution fund within 45 days of the close of the reporting period:

(i) Shall be prohibited from receiving new Federal capital contributions;

(ii) Must place the revolving fund and all subsequent collections in an insured interest-bearing account; and

(iii) May make no loan disbursements.

The above restrictions apply until the Secretary determines that the school is in compliance with the reporting requirement.

(2) A school that fails to submit a complete report within 6 months of the close of the reporting period will be subject to termination. The Secretary will provide the school with a written notice specifying his or her intention to terminate the school's participation in the program and stating that the school may request, within 30 days of the receipt of this notice, a formal hearing. If the school requests a hearing, it must within 90 days of the receipt of the notice, submit material, factual issues in dispute to demonstrate that there is cause for a hearing. These issues must be both substantive and relevant. The hearing will be held in the Washington, DC metropolitan area. The Secretary will deny a hearing if:

(i) The request for a hearing is untimely (i.e., fails to meet the 30-day requirement);

(ii) The school does not provide a statement of material, factual issues in dispute within the 90-day required period; or

(iii) The statement of factual issues in dispute is frivolous or inconsequential.

In the event that the Secretary denies a hearing, the Secretary will send a written denial to the school setting forth the reasons for denial. If a hearing is denied, or if as a result of the hearing, termination is still determined to be necessary, the school will be terminated from participation in the program and will be required to return the Federal share of the revolving fund to the Department. A school terminated for failure to submit a complete report within 6 months of the close of the reporting period must continue to pursue collections and may reapply for participation in the program once it has submitted the overdue report.

(3) The school must also comply with the requirements of 45 CFR part 74 and section 798(e) of the Act concerning recordkeeping, audit, and inspection.

(b) The following student records must be retained by the school for 5 years after an individual student ceases to be a full-time student:

(1) Approved student applications for health professions student loans;

(2) Documentation of the financial need of applicants; and

(3) Copy of financial aid transcript(s).

(c) The following repayment records for each individual borrower must be retained for at least 5 years from the date of retirement of a loan:

(1) The amount and date of each loan;

(2) The amount and date of each payment or cancellation;

(3) Records of periods of deferment;

(4) Date, nature and result of each contact with the borrower or proper endorser in the collection of an overdue loan;

(5) Copies of all correspondence to or from the borrower and endorser;

(6) Copies of all correspondence with collection agents related to the individual borrower;

(7) Copies of all correspondence with a credit bureau related to an individual borrower; and

(8) Copies of all correspondence relating to uncollectible loans which have been written off by the Federal Government or repaid by the school.

(d) The school must also retain other records as the Secretary may prescribe. In all cases where questions have arisen as a result of a Federal audit, the records must be retained until resolution of all questions.

(e) Institutional officials who have information which indicates the potential or actual commission of fraud or other offenses against the United States, involving these loan funds, should promptly provide this information to the appropriate Regional Office of Inspector General for Investigations.

(Approved by the Office of Management and Budget under control number 0915–0047)

[48 FR 25070, June 3, 1983, as amended at 50 FR 34421, Aug. 23, 1985; 53 FR 46549, Nov. 17, 1988; 56 FR 19294, Apr. 26, 1991; 57 FR 45734, Oct. 5, 1992; 61 FR 6123, Feb. 16, 1996]

§57.216 What additional Department regulations apply to schools?

(a) Participating schools are advised that in addition to complying with the terms and conditions of these regulations, several other regulations apply under this subpart. These include, but are not limited to:

45 CFR part 76—Governmentwide Debarment and Suspension (nonprocurement) and Governmentwide Requirements for Drug-Free Workplace (Grants)

45 CFR part 80—Nondiscrimination under programs receiving Federal assistance through the Department of Health and Human Services effectuation of title VI of the Civil Rights Act of 1964

45 CFR part 83—Regulation for the administration and enforcement of sections 794 and 855 of the Public Health Service Act

45 CFR part 84—Nondiscrimination on the basis of handicap in programs and activities receiving or benefiting from Federal financial assistance

45 CFR part 86—Nondiscrimination on the basis of sex in education programs and activities receiving or benefiting from Federal financial assistance

45 CFR part 91—Nondiscrimination on the basis of age in Health and Human Services programs or activities receiving Federal financial assistance

45 CFR part 93—New Restrictions on Lobbying

(b) The recipient may not discriminate on the basis of religion in the admission of individuals to its training programs.

[44 FR 29055, May 18, 1979, as amended at 56 FR 19294, Apr. 26, 1991; 57 FR 45734, Oct. 5, 1992; 61 FR 6123, Feb. 16, 1996]

§57.216a Performance standard.

On June 30, 1984, and on each June 30 thereafter, except as provided in paragraph (b) of this section, each school must have a default rate (as calculated under paragraph (a) of this section) of not more than 5 percent.

(a) The default rate for each school shall be the ratio (stated as a percentage) that the defaulted principal amount outstanding of the school bears to the matured loans of the school. For this purpose:

(1) The term *defaulted principal amount outstanding* means the total amount borrowed from the loan fund of a school that has reached the repayment stage (minus any principal amount repaid or canceled) on loans in default for more than 120 days; and

(2) The term *matured loans* means the total principal amount of all loans made by a school under this subpart minus the total principal amount of loans made by the school to students who are:

(i) Enrolled in a full-time course of study at the school; or

(ii) In their grace period.

(b) Any school that has a default rate greater than 5 percent on June 30 of any year will be required to:

(1) Reduce its default rate by 50 percent (or a school with a default rate below 10 percent must reduce its rate to 5 percent) by the close of the following 6-month period; and

(2) By the end of each succeeding 6-month period, reduce its default rate to 50 percent of the required rate for the previous 6-month period, until it reaches 5 percent.

(c) Any school subject to the provisions of paragraph (b) of this section which fails to comply with those requirements will receive no new HPSL funds and will be required to:

(1) Place the revolving fund monies and all subsequent collections into an insured interest-bearing account;

(2) Make no loan disbursements; and

(3) By the end of the succeeding 6-month period, reduce its default rate to 50 percent of the rate it failed to achieve under paragraph (b) of this section, or 5 percent. A school that meets this requirement wil be permitted to resume the use of its health professions student loan funds, but must continue to comply with the requirements of paragraph (b)(2) of this section if its default rate is still greater than 5 percent.

(d) Any school subject to the provisions of paragraph (c)(3) of this section which fails to comply with those requirements will be subject to termination. The Secretary will provide the school with a written notice specifying his or her intention to terminate the school's participation in the program and stating that the school may request, within 30 days of the receipt of this notice, a formal hearing. If the school requests a hearing, it must within 90 days of the receipt of the notice, submit material, factual issues in dispute to demonstrate that there is cause for a hearing. These issues must be both substantive and relevant. The hearing will be held in the Washington, DC metropolitan area. The Secretary will deny a hearing if:

(1) The request for a hearing is untimely (i.e., fails to meet the 30-day requirement);

(2) The school does not provide a statement of material, factual issues in dispute within the 90-day required period; or

(3) The statement of factual issues in dispute is frivolous or inconsequential.

In the event that the Secretary denies a hearing, the Secretary will send a written denial to the school setting forth the reasons for denial. If a hearing is denied, or if as a result of the hearing, termination is still determined to be necessary, the school will be terminated from participation in the program and will be required to return the Federal share of the revolving fund to the Department. A school terminated for failure to comply with the provisions of paragraph (c)(3) of this section must continue to pursue collections and may reapply for participation in the program only when it has attained a default rate of 5 percent or less.

(Approved by the Office of Management and Budget under control number 0915–0047)

[50 FR 34423, Aug. 23, 1985, as amended at 52 FR 20988, June 3, 1987; 53 FR 46550, Nov. 17, 1988; 56 FR 19294, Apr. 26, 1991]

§ 57.217 Additional conditions.

The Secretary may with respect to any agreement entered into with any school under § 57.205, impose additional conditions prior to or at the time of any award when in his or her judgment these conditions are necessary to assure or protect the advancement of the purposes of the agreement, the interest of the public health, or the conservation of funds awarded.

§ 57.218 Noncompliance.

Wherever the Secretary finds that a participating school has failed to comply with the applicable provisions of the Act or the regulations of this subpart, he or she may, on reasonable notice to the school, withhold further payment of Federal capital contributions, and take such other action, including the termination of any agreement, as he or she finds necessary to enforce the Act and regulations. In this case no further expenditures shall be made from the health professions student loan fund or funds involved until the Secretary determines that there is no longer any failure of compliance.

Subpart D—Nursing Student Loans

AUTHORITY: Sec. 215 of the Public Health Service Act, 58 Stat. 690, 67 Stat. 631 (42 U.S.C. 216); secs. 835–842 of the Public Health Service Act, 77 Stat. 913–916, as amended by 99 Stat. 397–400, 536–537, and 102 Stat. 3160–3161 (42 U.S.C. 297 a–i).

SOURCE: 50 FR 34434, Aug. 23, 1985, unless otherwise noted.

§ 57.301 Applicability.

The regulations in this subpart apply to the Federal capital contributions made by the Secretary to public or other nonprofit schools of nursing for the establishment of nursing student loan funds and to loans made to students from these funds.

§ 57.302 Definitions.

As used in this subpart:

Academic year means the traditional, approximately 9-month September to June annual session. For the purpose of computing academic year equivalents for students who, during a 12-month period, attend for a longer period than the traditional academic year, the academic year will be considered to be of 9 months' duration.

Act means the Public Health Service Act, as amended.

Community health center means an entity as defined under section 330(a) of the Public Health Service Act, and in regulations at 42 CFR 51c.102(c).

Date upon which a student ceases to be a full-time or half-time student means the first day of the month which is nearest to the date upon which an individual ceases to be a full-time or half-time student, as defined in this section.

Default means the failure of a borrower of a loan made under this subpart to make an installment payment when due, or comply with any other term of the promissory note for such loan, except that a loan made under this subpart shall not be considered to be in default if the loan is discharged in bankruptcy, the borrower's repayment schedule has been renegotiated and the borrower is complying with the renegotiated schedule, or the loan is in forbearance.

Federal capital loan means a loan made by the Secretary to a school under section 827(a) of the Act, as in effect prior to July 29, 1975, the proceeds of which are to be returned to the Secretary.

Full-time student means a student who is enrolled in a school and pursuing a course of study which constitutes a full-time academic workload, as determined by the school, leading to a diploma in nursing, an associate degree in nursing or an equivalent degree, a baccalaureate degree in nursing or an equivalent degree, or a graduate degree in nursing.

Good standing means the eligibility of a student to continue in attendance at the school where he or she is enrolled as a student in accordance with the school's standards and practices.

Grace period means the period of 9 months beginning on the date upon which a student ceases to be a full-time or half-time student at a school of nursing.

Half-time student means a student who is enrolled in a school and pursuing a course of study which constitutes at least one-half of a full-time academic workload but less than a full-time academic workload, as determined by the school, leading to a diploma in nursing, an associate degree in nursing or an equivalent degree, a baccalaureate degree in nursing or an equivalent degree, or a graduate degree in nursing.

Indian Health Service health center means a health care facility (whether operated directly by the Indian Health Service or operated by a tribal contractor or grantee under the Indian Self-Determination Act), which is physically separated from a hospital, and which provides one or more clinical treatment services, such as physician, dentist or nursing services, available at least 40 hours a week for outpatient care to persons of Indian or Alaska Native descent.

Institutional capital contribution means the money provided by a school, in an amount not less than one-ninth of the Federal capital contribution, and deposited in a nursing student loan fund.

Migrant health center means an entity as defined under section 329(a) of the Public Health Service Act, and in regulations at 42 CFR 56.102(g).

National of the United States means: (1) A citizen of the United States, or (2) a person who, though not a citizen of the United States, owes permanent allegiance to the United States, as defined in the Immigration and Nationality Act, at 8 U.S.C. 1101(a)(22).

Native Hawaiian health center means an entity (as defined in section 8 of Public Law 100–579)—

(a) Which is organized under the laws of the State of Hawaii,

(b) Which provides or arranges for health care services through practitioners licensed by the State of Hawaii, where licensure requirements are applicable,

(c) Which is a public or private nonprofit entity, and

(d) In which Native Hawaiian health practitioners significantly participate in the planning, management, monitoring, and evaluation of health services.

Nursing facility means a facility as defined in section 1919(a) of the Social Security Act (SSA) (for fiscal year (FY) 1991 and subsequent fiscal years), except for FYs 1989 and 1990, the term means a ''skilled nursing facility,'' as such term is defined in section 1861(j) of the SSA, and an ''intermediate care facility,'' as such term is defined in section 1905(c) of such Act.

Nursing student loan means the amount of money advanced to a student by a school from a nursing student loan fund under a properly executed promissory note.

Registered nurse means an individual who has been licensed by a State Board of Nursing to practice professional nursing in accordance with State licensing laws requiring as a minimum one of the degrees or diplomas specified in this section.

Rural health clinic means an entity as defined under section 1861(aa)(2) of the Social Security Act, and in regulations at 42 CFR 491.2.

School means a public or other nonprofit school of nursing, as defined in section 853 of the Act.

Secretary means the Secretary of Health and Human Services and any other officer or employee to whom the authority involved has been delegated.

State means, in addition to the several States, the District of Columbia, the Commonwealth of Puerto Rico, the Commonwealth of the Northern Mariana Islands, the Virgin Islands, Guam, American Samoa, the Republic of Palau, the Republic of the Marshall Islands, and the Federated States of Micronesia.

[50 FR 34434, Aug. 23, 1985, as amended at 52 FR 10195, Mar. 30, 1987; 53 FR 46554, Nov. 17, 1988; 56 FR 13771, Apr. 4, 1991; 61 FR 6123, Feb. 16, 1996]

§ 57.303 Application by school.

(a) Each school seeking a Federal capital contribution must submit an application at the time and in the form and manner that the Secretary may require. The application must be signed by an individual authorized to act for the applicant and to assume on behalf of the applicant the obligations imposed by the statute, the regulations of this subpart, and the terms and conditions of the award.

(b) Each application will be reviewed to determine eligibility and the reasonableness of the amount of Federal support requested. The Secretary may require the applicant to submit additional data for this purpose.

(c) An application will not be approved unless an agreement between the Secretary and the applicant school for a Federal capital contribution under section 835 of the Act is reached.

[50 FR 34434, Aug. 23, 1985, as amended at 56 FR 13771, Apr. 4, 1991; 57 FR 45735, Oct. 5, 1992]

§ 57.304 Payment of Federal capital contributions and reallocation of funds remitted to the Secretary.

(a) *Annual payment.* The Secretary will make payments at a time determined by him or her, to each school with which he or she has entered into an agreement under the Act.

(1) For any fiscal year for which ''set-aside'' funds are available, the Secretary will first make payments in the manner described in (a)(2) of this section of not less than $1,000,000 of the amount of Federal funds determined by the Secretary at the time of payment to be available for making loans under this subpart. These funds will be paid to schools submitting an application for ''set-aside'' funds to be used only

for the purpose of making loans to individuals qualified to receive loans under this subpart who, on the date they receive the loan, have not been employed on a full-time basis or been enrolled in any educational institution on a full-time basis for at least 7 years. An individual may not receive a loan under this subparagraph that exceeds $500 for any academic year.

(2) If the total of the amounts requested for any fiscal year by all schools for Federal capital contributions minus the amount received under paragraph (a)(1) of this section exceeds the amount of Federal funds determined by the Secretary at the time of payment to be available for this purpose, the payment to each school will be reduced to whichever is smaller: (i) The amount requested in the application, or (ii) an amount which bears the same ratio to the total amount of Federal funds determined by the Secretary at the time of payment to be available for that fiscal year for the Nursing Student Loan program as the number of full-time students estimated by the Secretary to be enrolled in that school bears to the estimated total number of full-time students in all participating schools during that year.

(3) Amounts remaining after these payments are made will be distributed in accordance with this paragraph among schools whose applications requested more than the amount paid to them, but with whatever adjustments that may be necessary to prevent the total paid to any school from exceeding the total requested by it.

(b) *Method of payment.* The payment of Federal capital contributions to a school will be paid in a manner that avoids unnecessary accumulations of money in any nursing student loan fund.

(c) *Reallocation of funds remitted to the Secretary.* (1) All funds from a student loan fund established under this subpart which are remitted to the Secretary in any fiscal year shall be available for allotment under this subpart, in the same fiscal year and the succeeding fiscal year, to eligible nursing schools. In making these allotments, the Secretary shall give priority to nursing schools which established a student loan fund under this subpart after September 30, 1975. The Secretary will make payments to eligible schools at a time determined by him or her, according to the procedures indicated in paragraphs (c)(2) and (c)(3) of this section.

(2) *Eligible schools which established a nursing student loan fund after September 30, 1975.* The Secretary will make awards first to those eligible schools that established a nursing student loan fund after September 30, 1975. If the total of the amounts requested for any fiscal year by these schools exceeds the amount of funds determined by the Secretary at the time of payment to be available for this purpose, the payment to each school will be reduced to whichever is smaller:

(i) The amount requested in the application, or

(ii) An amount which bears the same ratio to the total amount of returned funds determined by the Secretary at the time of payment to be available for that fiscal year for the Nursing Student Loan program as the number of full-time students estimated by the Secretary to be enrolled in that school bears to the estimated total number of full-time students in these eligible schools during that year.

Amounts remaining after these payments are made will be distributed in accordance with this paragraph among schools whose applications requested more than the amount paid to them, with whatever adjustments may be necessary to prevent the total paid to any school from exceeding the total requested by it.

(3) *Eligible schools which established a nursing student loan fund prior to October 1, 1975.* If there are funds remaining after making awards as specified by paragraph (c)(2) of this section, the Secretary will make awards to eligible schools which established a nursing student loan fund prior to October 1, 1975. If the total of the amounts requested for any fiscal year by these schools exceeds the amount of funds determined by the Secretary at the time of payment to be available for this purpose, the payment to each school will be reduced to whichever is smaller:

(i) The amount requested in the application, or

(ii) An amount which bears the same ratio to the total amount of returned funds determined by the Secretary at the time of payment to be available for that fiscal year for the Nursing Student Loan program as the number of full-time students estimated by the Secretary to be enrolled in that school bears to the estimated total number of full-time students in these eligible schools during that year.

Amounts remaining after these payments are made will be distributed in accordance with this paragraph among schools whose applications requested more than the amount paid to them, with whatever adjustments may be necessary to prevent the total paid to any school from exceeding the total requested by it.

[50 FR 34434, Aug. 13, 1985, as amended at 53 FR 46554, Nov. 17, 1988]

§ 57.305 Nursing student loan funds.

(a) *Funds established with Federal capital contributions.* Any fund established by a school with Federal capital contributions will be accounted for separately from other funds, providing a clear audit trail for all transactions. At all times the fund must contain monies representing the institutional capital contribution. The school must at all times maintain all monies relating to the fund in one or more interest-bearing accounts or investment instruments which meet OMB requirements established for Federal monies held by third parties, except that if the school documents that the costs associated with the use of an interest-bearing account would exceed expected earnings, the school is not required to maintain these monies in an interest-bearing account. The school must place all earnings into the fund but may first deduct from total earnings any reasonable and customary charges incurred through the use of an interest-bearing account. An institution shall exercise the level of care required of a fiduciary with regard to these deposits and investments, and shall be responsible for reimbursing the fund for any losses that occur due to the use of investments that are not federally insured.

(1) The Federal capital contribution fund is to be used by the school only for:

(i) Nursing student loans to full-time or half-time students;

(ii) Capital distribution as provided in section 839 of the Act or as agreed to by the school and the Secretary; and

(iii) Costs of litigation, costs associated with membership in credit bureaus, and to the extent specifically approved by the Secretary, other collection costs that exceed the usual expenses incurred in the collection of nursing student loans.

(2) A school must review the balance in the fund on at least a semi-annual basis to determine whether the fund balance compared with projected levels of expenditures and collections exceeds its needs. A school in closing status must review the balance in the fund on a quarterly basis. Monies identified as in excess of the school's needs must be reported, and the Federal share returned to the Federal Government, by the due date of the required report which identifies the excess monies. The school's determination is subject to the review and approval of the Secretary.

(b) *Funds established with Federal capital loans.* (1) Each Federal capital loan is subject to the terms of the promissory note executed by an authorized official on behalf of the borrowing school.

(2) The Federal capital loans must be carried in a special account of the school, to be used by the school only for: (i) Repayments of principal and interest on Federal capital loans; and (ii) costs of litigation, costs associated with membership in credit bureaus, and, to the extent specifically approved by the Secretary, other collection costs that exceed the usual expenses incurred in the collection of nursing student loans.

(c) Failure to comply with the requirements of this section will subject a school to the noncompliance provisions of § 57.318 and the Department's Claims Collections regulations (45 CFR part 30), as appropriate.

(Approved by the Office of Management and Budget under control number 0915–0047)

[50 FR 34434, Aug. 23, 1985, as amended at 56 FR 40734, Aug. 15, 1991; 61 FR 6123, Feb. 16, 1996]

§ 57.306 Eligibility and selection of nursing student loan applicants.

(a) *Determination of eligibility*. (1) Applicants are eligible for consideration for a nursing student loan if they are:

(i) Residents of the United States and either a citizen or national of the United States, an alien lawfully admitted for permanent residence in the United States, a citizen of the Commonwealth of the Northern Mariana Islands, a citizen of the Republic of Palau, a citizen of the Republic of the Marshall Islands, or a citizen of the Federated States of Micronesia;

(ii) Enrolled, or accepted for enrollment in the school as full-time or half-time students;

(iii) In need of the amount of the loan to pursue the course of study at the school; and

(iv) Capable, in the opinion of the school, of maintaining good standing in the course of study.

(2) An applicant who has previously attended an institution of higher education must submit a financial aid transcript which includes at least the following data:

(i) Applicant's name and social security number;

(ii) Amounts and sources of loans and grants previously received by the applicant for study at an institution of higher education;

(iii) Whether the applicant is in default on any of these loans, or owes a refund on any grants;

(iv) Certification from each institution previously attended by the applicant that the applicant has received no financial aid, if applicable; and

(v) From each institution previously attended, the signature of an official authorized by the institution to sign such transcripts on behalf of the institution.

(b) *Selection of nursing student loan applicants and determinations of need*. The school will select qualified applicants, make reasonable determinations of need, and determine the amount of student loans.

(1) In selecting nursing student loan applicants the school will give preference to licensed practical nurses, and to persons with exceptional financial need. For purposes of this preference, a student will be considered to demonstrate exceptional financial need if the school determines that the student's resources, as described in paragraph (b)(2)(i) of this section, do not exceed one-half of the costs of attendance at the school. Summer earnings, educational loans, veterans (G.I.) benefits, earnings during the school year, and Aid to Families with Dependent Children (AFDC) will not be considered as resources in determining whether an applicant meets these criteria for exceptional financial need, but will be considered in determining the amount of funds a student may receive.

(2) In determining whether a student is in need of a nursing student loan to pursue a full-time or half-time course of study at the school, the school will take into consideration:

(i) The financial resources available to the student by using one of the national need analysis systems or any other procedure approved by the Secretary of Education in combination with other information which the school has regarding the student's financial status; and

(ii) The costs reasonably necessary for the student's attendance at the school, including any special needs and obligations which directly affect the student's financial ability to attend the school on a full-time or half-time basis. The school must document the criteria used for determining these costs.

(c) *Verification of loan information*. The school must verify, to the best of its ability, the information provided by the student on the loan application. To comply with this requirement, a school may require that a student provide, for example: Photocopies of the parents', student's, and spouse's Federal income tax forms with original signatures for the most recent tax year (or certification that no Federal income tax return was filed); tax returns that are certified as having been received by the Internal Revenue Service; or other documentation that the school considers necessary to help assure that information on the loan application is correct.

(Approved by the Office of Management and Budget under control number 0915–0047)

[50 FR 34434, Aug. 23, 1985, as amended at 53 FR 46554, Nov. 17, 1988; 56 FR 13771, Apr. 4, 1991; 61 FR 6123, Feb. 16, 1996]

§ 57.307 Maximum amount of nursing student loans.

The total of the nursing student loans made from the fund to any student for an academic year may not exceed $2,500, except that for each of the final 2 academic years of the program, the total must not exceed $4,000. The maximum amount loaned during a 12-month period to any student enrolled in a school which provides a course of study longer than the 9-month academic year may be proportionately increased. The total of all nursing student loans to any student must not exceed $13,000.

[56 FR 13771, Apr. 4, 1991]

§ 57.308 Nursing student loan promissory note.

(a) *Promissory note form.* Each nursing student loan must be evidenced by a properly executed promissory note in a form approved by the Secretary. The school must safeguard the promissory note against fire, theft, and tampering.

(1) Each promissory note must state that the loan will bear interest on the unpaid balance computed only for periods during which repayment of the loan is required, at the rate of 5 percent per year.

(2) Each promissory note must contain an acceleration clause provided by the Secretary, which will permit the acceleration of delinquent loans at the school's option.

(3) A copy of each executed note must be supplied by the school to the student borrower.

(b) *Security.* A school must require security or endorsement if the borrower is a minor and if, under the applicable State law, the note signed by him or her would not create a binding obligation. The school may not require security or endorsement in any other circumstances.

(Approved by the Office of Management and Budget under control number 0915–0047)

[50 FR 34434, Aug. 23, 1985, as amended at 56 FR 13771, Apr. 4, 1991; 57 FR 45735, Oct. 5, 1992]

§ 57.309 Payment of nursing student loans.

(a) Nursing student loans from any fund may be paid to or on behalf of student borrowers in installments considered appropriate by the school except that a school may not pay to or on behalf of any borrower more during any given installment period (e.g., semester, term, or quarter) than the school determines the student needs for that period.

(b) No payment may be made from a fund to or on behalf of any student borrower if at the time of the payment the borrower is not a full-time or half-time student.

§ 57.310 Repayment and collection of nursing student loans.

(a) Each nursing student loan, including accrued interest, will be repayable in equal or graduated periodic installments in amounts calculated on the basis of a 10-year repayment period. Repayment of a loan must begin 9 months after the student ceases to be a full-time or half-time student, except that if a borrower reenters the same or another school as a full-time or half-time student within the 9-month period, the date upon which interest will accrue and the repayment period will begin will be determined by the date upon which the student last ceases to be a full-time or half-time student at that school.

(1) The following periods will be excluded from the 10-year repayment period: (i) All periods up to a total of 3 years of active duty performed by the borrower as a member of the Army, Navy, Air Force, Marine Corps, Coast Guard, National Oceanic and Atmospheric Administration Corps or the U.S. Public Health Service Commissioned Corps;

(ii) All periods up to a total of 3 years of service as a volunteer under the Peace Corps Act; and

(iii) All periods up to a total of 10 years during which the borrower is pursuing a full-time or half-time course of study at a school leading to a baccalaureate degree in nursing or an equivalent degree, or to a graduate degree in nursing, or is otherwise pursuing advanced professional training in nursing (or training to be a nurse anesthetist). For purposes of this paragraph, ''otherwise pursuing advanced professional training in nursing'' shall include full-time or half-time training, beyond the

first diploma or degree in nursing received by the particular borrower, of at least 1 academic year which will advance the borrower's knowledge of and strengthen his or her skills in the provision of nursing services.[1]

(2) Subject to the provisions of paragraph (b)(3) of this section, a borrower must establish a repayment schedule with the school providing for payments not less often than quarterly. Any borrower whose repayment becomes more than 60 days past due must be placed on a monthly repayment schedule by the school. A borrower may at his or her option and without penalty, prepay all or part of the principal and accrued interest at any time.

(3) A school may grant forbearance whenever extraordinary circumstances such as unemployment, poor health or other personal problems temporarily affect the borrower's ability to make scheduled loan repayments.

(b) *Collection of nursing student loans.* (1) Each school at which a fund is established must exercise due diligence in the collection of nursing student loans due the fund. In the exercise of due diligence, a school must follow procedures which are at least as extensive and effective as those used in the collection of other student loan accounts due the school, and must use the steps outlined below in accordance with collection practices which are generally accepted among institutions of higher education:

(i) Conduct and document an entrance interview (individually or in groups) with the borrower prior to disbursing NSL funds in any academic year. During the entrance interview the school must obtain documentation which indicates that the borrower is aware of the rights and responsibilities associated with NSL funds and personal information which would assist in locating the borrower if he or she fails to keep the school informed of his or her current address. The requirement of this subparagraph may be met by correspondence if the school determines that a face-to-face meeting (individually or in groups) is impracticable.

(ii) Conduct and document an exit interview (individually or in groups) with the borrower. During the exit interview, the school must provide each borrower with information necessary to carry out the terms of repayment, remind the borrower of the rights and responsibilities associated with NSL funds, and update the personal information collected prior to disbursing NSL funds which would assist in locating the borrower if he or she fails to keep the school informed of his or her current address. If the borrower terminates studies without advance notice, the school must document attempts to inform the borrower of the substance of the exit interview and to secure exit interview information from the borrower by mail.

(iii) Notify the borrower in writing of the impending repayment obligation at least twice during the grace period;

(iv) Notify a borrower who is in deferment status in writing of the impending repayment obligation 1 to 3 months prior to the expiration of the approved period of deferment;

(v) Perform regular billing;

(vi) Follow up past due payments with a series of at least four documented and reasonably spaced attempts to contact the borrower, at least three of which must be in writing at not more than 30-day intervals, prior to the loan becoming 120 days past due, provided that the school has a current address for the borrower;

(vii) Perform address searches when necessary;

(viii) Use collection agents, which may include the use of an internal collection agent;

(ix) Institute legal proceedings against borrowers after all other attempts at collection have failed, unless the school determines, subject to the approval of the Secretary, that such litigation would not be cost-effective; and

[1] Individuals who received nursing student loans prior to July 1, 1969, remain subject to the repayment provisions of 42 CFR 57.314(a)(3)(1976) as adopted on February 4, 1974. These provisions can be found at 39 FR 16473 (May 9, 1974), and a copy can be obtained by writing the Division of Student Assistance, Bureau of Health Professions, 5600 Fishers Lane, Parklawn Building, room 8–34, Rockville, MD 20857.

(x) Become a member of a credit bureau and notify the credit bureau of accounts past due by more than 120 days.

In place of one or more of the procedures outlined above schools may substitute collection techniques that are equally or more effective, but only after they have demonstrated the effectiveness of the techniques and obtained written approval from the Secretary.

(2) *Late charge.* (i) For any nursing student loan made after June 30, 1969, but prior to October 1, 1985, the school may fix a charge for failure of the borrower to pay all or any part of an installment when it is due and, in the case of a borrower who is entitled to deferment under section 836(b)(2) of the Act, or cancellation or repayment under section 836(b)(3) of the Act, for any failure to file timely and satisfactory evidence of the entitlement. The amount of the charge may not exceed $1 for the first month or part of a month by which the installment or evidence is late and $2 for each succeeding month or part of a month. The school may elect to add the amount of this charge to the principal amount of the loan as of the day after the day on which the installment or evidence was due, or to make the amount of the charge payable to the school no later than the due date of the next installment following receipt of the notice of the charge by the borrower.

(ii) For any nursing student loan made on or after October 1, 1985, the school shall assess a charge for failure of the borrower to pay all or any part of an installment when the loan is more than 60 days past due and, in the case of a borrower who is entitled to deferment under section 836(b)(2) of the Act, for any failure to file satisfactory evidence of the entitlement within 60 days of the date payment would otherwise be due. No charge may be made if the loan is less than 61 days past due. The amount of this charge may not exceed an amount equal to 6 percent of the amount due at the time the charge is calculated. The school may elect to add the amount of this charge to the principal amount of the loan as of the day on which the charge is calculated, or to make the amount of the charge payable to the school no later than the due date of the next installment following receipt of the notice of the charge by the borrower.

(3) With respect to any nursing student loan made after June 30, 1969, the school may require the borrower to make payments of at least $15 per month on all outstanding nursing student loans during the repayment period.

(4) A school must, on an annual basis, review and assess the collectibility of any loan more than 3 years past due. If the school determines that the prospects of future collection are promising enough to justify periodic review of the debt, and neither the statute of limitations nor the 10-year repayment period has expired, the school may retain the account for continued collections, provided that it makes an attempt at least semi-annually to collect from the borrower. When the due diligence procedures required by paragraph (b)(1) of this section have been exhausted, the school is responsible for determining the collection methods it will use for the semi-annual collection effort required on these loans. If the school determines that the prospects of future collection are not promising, or when the statute of limitations or the 10-year repayment period has expired, the loan must be considered uncollectible. A school may determine a loan to be uncollectible sooner than 3 years past due when it has evidence that the loan cannot be collected, but in no case should a school consider a loan as uncollectible if it has not been in default for at least 120 days. A school is not subject to the requirements in paragraphs (b)(4) (i) and (iii) of this section for loans that became uncollectible, as determined by the school, before January 1, 1983.

(i) A school must request permission to write off an uncollectible loan within 30 days of the determination that it is uncollectible or reimburse the fund in the full amount of the loan, pursuant to § 57.310(b)(4)(iii). The 30-day period for submitting the loan for write-off review begins on the date that the determination of uncollectibility is made, in accordance with paragraph (b)(4) of this section. In any instance where the Secretary determines that a

school has failed to exercise due diligence in the collection of a loan, in accordance with the applicable regulatory requirements, the school will be required to place in the fund the full amount of principal, interest, and penalty charges that remains uncollected on the loan. Reimbursement must be made by the following June 30 or December 31, whichever is sooner, except that in no case will a school be required to reimburse the fund in less than 30 days following the Secretary's disapproval of the request for write-off approval.

(ii) If the Secretary determines that a school has exercised due diligence in the collection of a loan, in accordance with the applicable regulatory requirements, or if the school determines that the loan was uncollectible prior to January 1, 1983, the school will be permitted to reduce its accounts receivable for the NSL fund by the full amount of principal, interest, and penalty charges that remains uncollected on that loan and will not be required to return the Federal share of the loss to the Secretary.

(iii) If a school does not request permission to write off an uncollectible loan within the required timeframe, it must reimburse the fund for the full amount of principal, interest, and penalty charges that remains uncollected on that loan. This reimbursement must be made by the following June 30 or December 31, whichever is sooner, except that in no case will a school be required to reimburse the fund in less than 30 days following its determination that a loan is uncollectible.

(iv) Failure to comply with the requirements of this section will subject a school to the noncompliance provisions of § 57.318 and the Department's Claims Collection regulations (45 CFR part 30), as appropriate.

(5) *Disclosure of taxpayer identity information.* Upon written request by the Secretary, the Secretary of the Internal Revenue Service (IRS) may disclose the address of any taxpayer who has defaulted on a nursing student loan, for use only by officers, employees, or agents of the Department, to locate the defaulted borrower to collect the loan. Any such mailing address may be disclosed by the Secretary to any school from which the defaulted borrower received a nursing student loan, for use only by officers, employees, or agents of the school whose duties relate to the collection of nursing student loan funds, to locate the defaulted borrower to collect the loan. Any school which requests and obtains such address information must comply with the requirements of the Secretary and the IRS regarding the safeguarding and proper handling of this information.

(Approved by the Office of Management and Budget under control number 0915–0047)

[50 FR 34434, Aug. 23, 1985, as amended at 52 FR 10195, Mar. 30, 1987; 56 FR 13771, Apr. 4, 1991; 56 FR 40734, Aug. 15, 1991; 57 FR 45735, Oct. 5, 1992; 61 FR 6123, Feb. 16, 1996]

§ 57.311 Cancellation of nursing student loans for disability or death.

(a) *Permanent and total disability.* The Secretary will cancel a borrower's indebtedness in accordance with section 836(b)(4) of the Act if the borrower is found to be permanently and totally disabled on recommendation of the school and as supported by whatever medical certification the Secretary may require. A borrower is totally and permanently disabled if he or she is unable to engage in any substantial gainful activity because of a medically determinable impairment, which the Secretary expects to continue for a long time or to result in death.

(b) *Death.* The Secretary will cancel a borrower's indebtedness in accordance with section 836(b)(4) of the Act upon the death of the borrower. The school to which the borrower was indebted must secure a certification of death or whatever official proof is conclusive under State law.

(Approved by the Office of Management and Budget under control number 0915–0047)

[50 FR 34434, Aug. 23, 1985, as amended at 56 FR 13772, Apr. 4, 1991]

§ 57.312 Repayment of loans for service in a shortage area.

(a) *Service in a shortage area.* Subject to the availability of funds, a person who:

(1) Has obtained a degree as specified in section 846(a)(1) of the Act;

(2) Has obtained one or more nursing student loans or any other loans necessary for costs (including tuition, books, fees, equipment, living and other expenses which the Secretary determines were necessary) of attending a school of nursing; and

(3) Enters into an agreement with the Secretary to serve as a full-time registered nurse for a period of not less than 2 years in an Indian Health Service health center, a Native Hawaiian health center, a public hospital, a migrant health center, a community health center, a nursing facility, a rural health clinic, or in a health facility determined by the Secretary to have a critical shortage of nurses, will have a portion of these loans repaid by the Secretary in accordance with paragraph (c) of this section. Prior to entering an agreement for repayment of loans, other than nursing student loans, the Secretary will require that satisfactory evidence be provided of the existence and reasonableness of the education loans (i.e., a copy of the written loan agreement establishing the loan).

(b) When entering into agreements under paragraph (a) of this section, the Secretary shall give priority to:

(1) Applicants with the greatest financial need; and

(2) Applicants that, with respect to health facilities described in paragraph (a)(3) of this section, agree to serve in such facilities located in geographic areas with a shortage of and need for nurses, as determined by the Secretary.

(3) In addition to the priorities under paragraphs (b) (1) and (2) of this section, should specific needs warrant, the Secretary may establish additional preferences which will be announced from time to time in the FEDERAL REGISTER.

(c) *Repayment.* Loan repayment will be made by the Secretary to persons who meet the conditions set forth in paragraph (a) of this section. Payment will be as follows:

(1) Upon completion by the borrower of the first year of service as specified in the agreement, the Secretary will pay 30 percent of the principal of, and the interest on, each loan which was unpaid as of the date the borrower began his or her service;

(2) Upon completion by the borrower of the second year of service, the Secretary will pay another 30 percent of the principal of, and the interest on, each loan which was unpaid as of the date the borrower began his or her service;

(3) Upon completion by the borrower of a third year of service, the Secretary will pay another 25 percent of the principal of, and the interest on, each loan which was unpaid as of the date the borrower began his or her service; and

(4) No more than 85 percent of the principal of any loan will be paid under this section.

(Approved by the Office of Management and Budget under control number 0915–0047)

[50 FR 34434, Aug. 23, 1985, as amended at 56 FR 13772, Apr. 4, 1991; 61 FR 6123, Feb. 16, 1996]

§ 57.313 Loan cancellation for full-time employment as a registered nurse.

(a) *For loans made after November 18, 1971, and before September 29, 1979.* A person who: (1) Received one or more nursing student loans after November 18, 1971, and before September 29, 1979; (2) is in compliance with the requirements of title VIII of the Act and these regulations; and (3) engages in full-time employment as a registered nurse (including teaching in any of the fields of nurse training or service as an administrator, supervisor, or consultant in any of the fields of nursing) in any public or nonprofit private agency, institution, or organization (including neighborhood health centers) is entitled to have a portion of these nursing student loans canceled as follows: 15 percent of the total amount of the loans plus accrued interest on the loan which is unpaid on the first day of his or her service, for each of the first, second, and third year of service; and 20 percent of the total amount of the loan plus accrued interest on the loan for each complete fourth and fifth year of service thereafter, up to 85 percent of the total of the loans, plus accrued interest.

(b) *Continuation of provisions for cancellation of loans made prior to November 18, 1971.* A person who received one or more nursing student loans prior to

November 18, 1971, may still receive cancellation of these loans for service under section 836(h) of the Act. The regulations set forth in 42 CFR 57.316 (a) and (b)(6) (1976), as adopted on February 4, 1974, remain applicable to cancellation on this basis. The provisions can be found at 39 FR 16473 (May 9, 1974) and a copy can be obtained by writing to the Division of Student Assistance, Bureau of Health Professions, Room 8–34, Parklawn Building, 5600 Fishers Lane, Rockville, MD 20857.

(c) The determination of whether a person is entitled to have any portion of his or her nursing student loan canceled for full-time employment as a registered nurse will be made by the institution to whose fund his or her loan is payable, upon receipt and evaluation of an application for cancellation from that person.

[50 FR 34434, Aug. 23, 1985, as amended at 56 FR 13772, Apr. 4, 1991; 57 FR 45735, Oct. 5, 1992; 61 FR 6123, Feb. 16, 1996]

§ 57.313a Loan cancellation reimbursement.

In the event that insufficient funds are available to the Secretary in any fiscal year to enable him or her to pay to all schools their proportionate shares of all loans and interest canceled under this subpart for full-time employment as a nurse, death, or disability:

(a) Each school will be paid an amount bearing the same ratio to the total of the funds available for that purpose as the principal of loans canceled by that school in that fiscal year bears to the total principal of loans canceled by all schools in that year; and

(b) Any additional amounts to which a school is entitled will be paid by the Secretary at the time of distribution of the assets of the school's fund under section 839 of the Act.

§ 57.314 Repayment of loans made after November 17, 1971, for failure to complete a program of study.[2]

In the event that the Secretary undertakes to repay educational loans under section 836(i) of the Act, he or she will use the following criteria to make a determination as to each applicant's eligibility:

(a) An applicant will be considered to have failed to complete the course of study in nursing for which an eligible education loan was made upon certification by a school of nursing that the individual ceased to be enrolled in the school subsequent to November 17, 1971;

(b) An applicant will be considered to be in exceptionally needy circumstances if, upon comparison of the income and other financial resources of the applicant with his or her expenses and financial obligations, the Secretary determines that repayment of the loan would constitute a serious economic burden on the applicant. In making this determination, the Secretary will take into consideration the applicant's net financial assets, his or her potential earning capacity, and the relationship of the income available to the applicant to the low-income levels published annually by the Secretary in the FEDERAL REGISTER;

(c) An applicant will be considered as not having resumed his or her nursing studies within 2 years following the date the individual ceased to be a student upon certification so stating from the applicant; and

(d) An applicant will be considered as not reasonably expected to resume his or her nursing studies within 2 years following the date upon which he or she terminated these studies, based upon consideration of the reasons for the applicant's failure to complete these studies, taking into account such factors as academic, medical, or financial difficulties. The Secretary will only repay education loans made after November 17, 1971.

[50 FR 34434, Aug. 23, 1985, as amended at 56 FR 13772, Apr. 4, 1991; 57 FR 45735, Oct. 5, 1992; 61 FR 6123, Feb. 16, 1996]

§ 57.315 Records, reports, inspection, and audit.

(a) *Records and reports.* (1) Each Federal capital contribution and Federal capital loan is subject to the condition that the school must maintain those

[2] Effective November 26, 1984, the Secretary stopped accepting applications under § 57.314 because Federal funds are not available for this provision.

records and file with the Secretary those reports relating to the operation of its nursing student loan funds as the Secretary may find necessary to carry out the purposes of the Act and these regulations. A school must submit required reports to the Secretary within 45 days of the close of the reporting period.

(i) A school which fails to submit a required report for its Federal capital contribution fund within 45 days of the close of the reporting period:

(A) Shall be prohibited from receiving new Federal capital contributions;

(B) Must place the revolving fund and all subsequent collections in an insured interest-bearing account; and

(C) May make no loan disbursements.

The above restrictions apply until the Secretary determines that the school is in compliance with the reporting requirement.

(ii) A school that fails to submit a complete report within 6 months of the close of the reporting period will be subject to termination. The Secretary will provide the school with a written notice specifying his or her intention to terminate the school's participation in the program and stating that the school may request, within 30 days of the receipt of this notice, a formal hearing. If the school requests a hearing, it must within 90 days of the receipt of the notice, submit material, factual issues in dispute to demonstrate that there is cause for a hearing. These issues must be both substantive and relevant. The hearing will be held in the Washington, DC metropolitan area. The Secretary will deny a hearing if:

(A) The request for a hearing is untimely (ie., fails to meet the 30-day requirement);

(B) The school does not provide a statement of material, factual issues in dispute within the 90-day required period; or

(C) The statement of factual issues in dispute is frivolous or inconsequential.

In the event that the Secretary denies a hearing, the Secretary will send a written denial to the school setting forth the reasons for denial. If a hearing is denied, or if as a result of the hearing, termination is still determined to be necessary, the school will be terminated from participation in the program and will be required to return the Federal share of the revolving fund to the Department. A school terminated for failure to submit a complete report within 6 months of the close of the reporting period must continue to pursue collections and may reapply for participation in the program once it has submitted the overdue report.

(2) The following student records must be retained by the school for 5 years after the individual student ceases to be a full-time or half-time student:

(i) Approved student applications for nursing student loans;

(ii) Documentation of the financial need of applicants; and

(iii) Copy of financial aid transcripts.

(3) The following repayment records for each individual borrower must be retained for at least 5 years from the date of retirement of a loan:

(i) The amount and date of each loan;

(ii) The amount and date of each payment or cancellation;

(iii) Records of periods of deferment;

(iv) Date, nature, and result of each contract with the borrower or proper endorser in the collection of an overdue loan;

(v) Copies of all correspondence to or from the borrower and endorser;

(vi) Copies of all correspondence with a collection agency related to the individual borrower;

(vii) Copies of all correspondence with a credit bureau related to an individual borrower; and

(viii) Copies of all correspondence relating to uncollectible loans which have been written off by the Federal Government or repaid by the school.

(4) The school must also retain other records as the Secretary may prescribe. In all cases where questions have arisen as a result of a Federal audit, the records must be retained until resolution of all questions.

(b) *Inspection and audit.* (1) Any application for a Federal capital contribution will constitute the consent of the applicant school to inspection and fiscal audit, by the Secretary and the Comptroller General of the United States or any of their duly authorized representatives, of the fiscal and other

records of the applicant school which relate to the Federal capital contribution or Federal capital loan.

(2) The school must comply with the audit requirements of the Department of Health and Human Services' Administration of Grants regulations which are set forth in 45 CFR part 74.

(c) Institutional officials who have information which indicates the potential or actual commission of fraud or other offenses against the United States, involving these loan funds, should promptly provide this information to the appropriate Regional Office of Inspector General for Investigations.

(Approved by the Office of Management and Budget under control number 0915–0047)

[50 FR 34434, Aug. 23, 1985, as amended at 53 FR 46555, Nov. 17, 1988; 56 FR 13772, Apr. 4, 1991; 57 FR 45735, Oct. 1, 1992]

§57.316 What additional Department regulations apply to schools?

Participating schools are advised that in addition to complying with the terms and conditions of these regulations, several other regulations apply under this subpart. These include, but are not limited to:

45 CFR part 76—Governmentwide Debarment and Suspension (nonprocurement) and Governmentwide Requirements for Drug-Free Workplace (Grants)

45 CFR part 80—Nondiscrimination under programs receiving Federal assistance through the Department of Health and Human Services effectuation of title VI of the Civil Rights Act of 1964

45 CFR part 83—Regulation for the administration and enforcement of sections 794 and 855 of the Public Health Service Act

45 CFR part 84—Nondiscrimination on the basis of handicap in programs and activities receiving or benefiting from Federal financial assistance

45 CFR part 86—Nondiscrimination on the basis of sex in education programs and activities receiving or benefiting from Federal financial assistance

45 CFR part 91—Nondiscrimination on the basis of age in Health and Human Services programs or activities receiving Federal financial assistance

45 CFR part 93—New Restrictions on Lobbying

[56 FR 13772, Apr. 4, 1991, as amended at 57 FR 45735, Oct. 5, 1992; 61 FR 6123, Feb. 16, 1996]

§57.316a Performance standard.

On June 30, 1986, and on each June 30 thereafter, except as provided in paragraph (b) of this section, each school must have a default rate (as calculated under paragraph (a) of this section) of not more than 5 percent.

(a) The default rate for each school shall be the ratio (stated as a percentage) that the defaulted principal amount outstanding of the school bears to the matured loans of the school. For this purpose:

(1) The term ''defaulted principal amount outstanding'' means the total amount borrowed from the loan fund of a school that has reached the repayment stage (minus any principal amount repaid or canceled) on loans in default for more than 120 days; and

(2) The term ''matured loans'' means the total principal amount of all loans made by a school under this subpart minus the total principal amount of loans made by the school to students who are:

(i) Enrolled in a full-time or half-time course of study at the school; or

(ii) In their grace period.

(b) Any school that has a default rate greater than 5 percent on June 30, 1986, or on June 30 of any year thereafter will be required to:

(1) Reduce its default rate by 50 percent (or a school with a default rate below 10 percent must reduce its rate to 5 percent) by the close of the following 6-month period; and

(2) By the end of each succeeding 6-month period, reduce its default rate to 50 percent of the required rate for the previous 6-month period, until it reaches 5 percent.

(c) Any school subject to the provisions of paragraph (b) of this section which fails to comply with those requirements will receive no new NSL funds and will be required to:

(1) Place the revolving fund monies and all subsequent collections into an insured interest-bearing account;

(2) Make no loan disbursements; and

(3) By the end of the succeeding 6-month period, reduce its default rate to 50 percent of the rate it failed to achieve under paragraph(b) of this section, or 5 percent. A school that meets this requirement will be permitted to resume the use of its nursing student

loan funds, but must continue to comply with the requirements of paragraph (b)(2) of this section if its default rate is still greater than 5 percent.

A school that meets the requirements of subparagraph (c)(3) of this section will be permitted to resume the use of its NSL funds, but must continue to comply with the requirements of subparagraph (b)(2) of this section if its delinquency rate is still greater than 5 percent.

(d) Any school subject to the provisions of paragraph (c)(3) of this section which fails to comply with those requirements will be subject to termination. The Secretary will provide the school with a written notice specifying his or her intention to terminate the school's participation in the program and stating that the school may request, within 30 days of the receipt of this notice, a formal hearing. If the school requests a hearing, it must within 90 days of the receipt of the notice, submit material, factual issues in dispute to demonstrate that there is cause for a hearing. These issues must be both substantive and relevant. The hearing will be held in the Washington, DC metropolitan area. The Secretary will deny a hearing if:

(1) The request for a hearing is untimely (i.e., fails to meet the 30-day requirement);

(2) The school does not provide a statement of material, factual issues in dispute within the 90-day required period; or

(3) The statement of factual issues in dispute is frivolous or inconsequential.

In the event that the Secretary denies a hearing, the Secretary will send a written denial to the school setting forth the reasons for denial. If a hearing is denied, or if as a result of the hearing, termination is still determined to be necessary, the school will be terminated from participation in the program and will be required to return the Federal share of the revolving fund to the Department. A school terminated for failure to comply with the provisions of paragraph (c)(3) of this section must continue to pursue collections and may reapply for participation in the program only when it has attained a default rate of 5 percent or less.

(Approved by the Office of Management and Budget under control number 0915–0047)

[50 FR 34434, Aug. 23, 1985, as amended at 52 FR 10195, Mar. 30, 1987; 53 FR 46555, Nov. 17, 1988; 56 FR 13772, Apr. 4, 1991]

§ 57.317 Additional conditions.

The Secretary may, with respect to any agreement entered into with any school under § 57.305, impose additional conditions prior to or at the time of any award when in his or her judgment the conditions are necessary to assure or protect advancement of the purposes of the agreement, the interest of the public health, or the conservation of funds awarded.

§ 57.318 Noncompliance.

Whenever the Secretary finds that a participating school has failed to comply with the applicable provisions of the Act or the regulations of this subpart he or she may, on reasonable notice to the school, withhold further payments of Federal capital contributions and take other action, including the termination of any agreement, as he or she finds necessary to enforce the Act and regulations. In such case no further expenditures shall be made from the nursing student loan fund or funds involved until the Secretary determines that there is no longer any failure of compliance.

Subpart E—Grants for Construction of Nurse Training Facilities

AUTHORITY: Sec. 215, 58 Stat. 690, as amended; 42 U.S.C. 216.

§ 57.409 Good cause for other use of completed facility.

If, within 20 years after completion of construction (or, in the case of interim facilities prior to the time at which teaching in such facilities is moved to a permanent facility, whichever comes first), the facility shall cease to be used for any one or more of the purposes for which it was constructed, the Secretary, in determining whether there is good cause for releasing the applicant or other owner of the facility from the obligation so to use the facility, shall

take into consideration the extent to which:

(a) The facility will be devoted by the applicant or other owner to the teaching of other health personnel;

(b) There are reasonable assurances that for the remainder of such period other facilities not previously utilized for nurse training will be so utilized and are substantially the equivalent in nature and extent for such purposes.

[37 FR 20548, Sept. 30, 1972]

Subpart F—Grants for Nurse Anesthetist Traineeships

AUTHORITY: Sec. 215 of the Public Health Service Act, 58 Stat. 690, as amended by 67 Stat. 631 (42 U.S.C. 216); sec. 831(a) of the Public Health Service Act, 93 Stat. 580, as amended by 96 Stat. 2061, and 99 Stat. 396–397 (42 U.S.C. 297–1).

SOURCE: 53 FR 9116, Mar. 21, 1988, unless otherwise noted.

§ 57.501 To what programs do these regulations apply?

These regulations apply to grants awarded to public or private nonprofit institutions for the purpose of providing traineeships to registered nurses enrolled in nurse anesthetist training programs.

§ 57.502 Definitions.

Act means the Public Health Service Act, as amended.

Fiscal Year means the Federal fiscal year, beginning October 1 and ending the following September 30.

National of the United States means a citizen of the United States or a person who, though not a citizen of the United States, owes permanent allegiance to the United States (as defined in 8 U.S.C. 1101(a)(22), the Immigration and Nationality Act).

Nonprofit refers to the status of an entity which is a corporation or association, or is owned and operated by one or more corporations or associations, no part of the net earnings of which inures, or may lawfully inure, to the benefit of any private shareholder or individual.

Nurse anesthetist means a registered nurse who has successfully completed a nurse anesthetist training program.

Nurse anesthetist training program means a full-time educational program which:

(1) Is designed to qualify registered nurses as nurse anesthetists;

(2) Is accredited by the Council on Accreditation of Nurse Anesthesia Educational Programs; and

(3) Has students enrolled in the program who are beyond the twelfth month of study.

Registered nurse means a person who has graduated from a school of nursing and is licensed to practice as a registered/professional nurse in a State.

School of nursing means a collegiate, associate degree, or diploma school of nursing as defined in section 853 of the Act.

Secretary means the Secretary of Health and Human Services and any other officer or employee of the Department of Health and Human Services, to whom the authority involved has been delegated.

State means, in addition to the several States, the District of Columbia, the Commonwealth of Puerto Rico, the Commonwealth of the Northern Mariana Islands, the Virgin Islands, Guam, American Samoa, the Republic of Palau, the Republic of the Marshall Islands, and the Federated States of Micronesia.

Trainee means a student who is receiving a traineeship from a grant under this subpart.

[53 FR 9116, Mar. 21, 1988, as amended at 57 FR 45735, Oct. 5, 1992; 61 FR 6124, Feb. 16, 1996]

§ 57.503 Who is eligible to apply for a grant?

Any public or private nonprofit institution which is located in a State and administers a nurse anesthetist training program is eligible to apply for a grant by submitting an application at the time and in the form that the Secretary may prescribe.

[53 FR 9116, Mar. 21, 1988, as amended at 57 FR 45735, Oct. 5, 1992]

§ 57.504 How will applications be evaluated?

Within the limits of funds available, the Secretary will award a grant to each eligible institution whose application is found to meet the requirements

of section 831(a) of the Act and these regulations. In determining the funding of applications, the Secretary will consider any special factors relating to national needs as the Secretary may from time to time announce in the FEDERAL REGISTER.

§ 57.505 How long does grant support last?

(a) The Notice of Grant Award specifies the period during which grant funds are available for obligation by the grantee. This period, called the budget period, will not exceed 1 year.

(b) The grant will initially be funded for 1 year, and subsequent awards will also be for 1 year at a time. Decisions about the amount of all awards will be made by formula as described in § 57.506 of these regulations. In all cases awards require a determination by the Secretary that funding is in the best interest of the Federal Government.

(c) Neither the approval of any application nor the award of any grant shall commit or obligate the United States in any way to make any additional award with respect to any approved application or portion of an approved application. For continuation support, grantees must make separate application at such times and in such a form as the Secretary may prescribe.

[53 FR 9116, Mar. 21, 1988, as amended at 57 FR 45735, Oct. 5, 1992]

§ 57.506 How is the amount of the award determined?

(a) The Secretary will use the following formula to determine the amount of the grant to be awarded to each approved nurse anesthetist training program:

$$G = F \times \frac{N}{E}$$

G represents the amount of grant to be awarded. F represents the amount of traineeship funds appropriated to implement section 831(a) in the fiscal year in which application is made. E represents the total number of full-time students enrolled beyond the twelfth month of study in all the approved applicant nurse anesthetist training programs. N represents the number of full-time students enrolled beyond the twelfth month of study in the applicant nurse anesthetist training program. Should special factors for determining the funding of applications be announced from time to time in the FEDERAL REGISTER, N will be adjusted upward for those applicants meeting the specific criteria as announced. (This adjustment will result in the award of additional traineeship funds to successful applicants who meet the criteria of the special factors.)

(b) Students will be counted as of October 15 of the Federal fiscal year in which application is made.

§ 57.507 For what purposes may grant funds be spent?

(a) A grantee shall only spend funds it receives under this subpart for traineeships according to § 57.508, the authorizing legislation, terms and conditions of the grant award, applicable cost principles specified in subpart Q of 45 CFR part 74, and these regulations.

(b) A grantee may not spend grant funds for sectarian instruction or for any religious purpose.

(c) Any balance of federally obligated grant funds remaining unobligated by the grantee at the end of the budget period may be carried forward provided specific approval is granted by the Secretary. If at any time during a budget period it becomes apparent to the Secretary that the amount of Federal funds awarded and made available to the grantee for that period, including any unobligated balance carried forward from prior periods, exceeds the grantee's need for that period, the Secretary may adjust the amounts awarded by withdrawing the excess. A budget period is an interval of time (usually 12 months) into which the project period is divided for funding and reporting purposes.

[53 FR 9116, Mar. 21, 1988, as amended at 57 FR 45735, Oct. 5, 1992]

§ 57.508 What financial support is available to trainees?

Expenditures from traineeship funds are limited to:

(a) Tuition and fees, in accordance with the established rates of the institution, except as limited by the Secretary.

(b) Stipends in whatever amount the grantee determines that each trainee needs to pursue the training program, as long as that amount does not exceed the limits established by the Public Health Service. Stipends may only be paid to the trainee in monthly installments.

(c) A transportation allowance for travel to field training if the site is beyond a reasonable commuting distance and requires the trainee to establish a temporary new residence. However, the grantee may not pay an allowance for daily commuting from the new place of residence to the field training headquarters.

[53 FR 9116, Mar. 21, 1988, as amended at 57 FR 45735, Oct. 5, 1992]

§ 57.509 Who is eligible for financial assistance as a trainee?

To be eligible for a traineeship, a registered nurse must:

(a) Be a resident of the United States and either a citizen or national of the United States, an alien lawfully admitted for permanent residence in the United States, a citizen of the Commonwealth of the Northern Mariana Islands, a citizen of the Republic of Palau, a citizen of the Republic of the Marshall Islands, or a citizen of the Federated States of Micronesia;

(b) Be enrolled as a full-time student beyond the twelfth month of study in a nurse anesthetist training program;

(c) Demonstrate financial need, as determined by the institution; and

(d) Not be receiving concurrent support for the same training from another Federal education award which provides a stipend or otherwise duplicates financial provisions except education benefits under the Veteran's Readjustment Benefits Act and loans from Federal sources.

(Approved by the Office of Management and Budget under control number 0915–0060)

[53 FR 9116, Mar. 21, 1988, as amended at 57 FR 45735, Oct. 5, 1992; 61 FR 6124, Feb. 16, 1996]

§ 57.510 What are the requirements for traineeships and the appointment of trainees?

(a)(1) The grantee must complete a statement which documents the appointment of each trainee. To complete this statement the grantee must require each trainee to provide information and documentation of his or her eligibility.

(2) The statement of appointment must be completed by the beginning of the training period or as soon thereafter as possible if the trainee receives notice of his or her traineeship appointment after the training period has begun. The statement of appointment must include information to document the eligibility of the trainee and certify that there will be compliance with all applicable Public Health Service terms and conditions governing the appointment. The program director must sign the statement on behalf of the grantee, and the trainee must sign it thus certifying the statements are true and complete. The original copy of the statement must be retained by the grantee to be available for program review and financial audit. A copy shall be provided to the trainee for his or her records.

(b) The grantee may not require trainees to perform any work which is not an integral part of the nurse anesthetist training program and required for all students in the program, or to perform services which detract from or prolong their training.

(Approved by the Office of Management and Budget under control number 0915–0060)

[53 FR 9116, Mar. 21, 1988, as amended at 57 FR 45735, Oct. 5, 1992]

§ 57.511 Duration of traineeships.

The initial appointment to a traineeship must be made for a full academic year, not to exceed 12 months, except that a shorter appointment may be made when necessary to enable the trainee to complete the training program. A second appointment may not exceed 6 months. The total period of support for any trainee may not exceed 18 months.

§ 57.512 Termination of traineeships.

(a) The grantee must terminate a traineeship:

(1) Upon request of the trainee;

(2) If the trainee withdraws from the grantee institution; or

(3) If the grantee determines that:

(i) The trainee is no longer an enrolled student; or

(ii) The trainee is not eligible or able to continue in accordance with its standards and practices.

(b) The grantee must deposit any Federal portion of the tuition refund owed to a trainee into the grant account and provide written notice to the trainee that it is doing so.

(Approved by the Office of Management and Budget under control number 0915–0060)

[53 FR 9116, Mar. 21, 1988, as amended at 57 FR 45735, Oct. 5, 1992]

§ 57.513 What additional Department regulations apply to grantees?

Several other regulations apply to grants under this subpart. These include, but are not limited to:

42 CFR part 50, subpart D—Public Health Service grant appeals procedure
45 CFR part 16—Procedures of the Departmental Grant Appeals Board
45 CFR part 74—Administration of grants
45 CFR part 75—Informal grant appeals procedures
45 CFR part 76—Governmentwide Debarment and Suspension (nonprocurement) and Governmentwide Requirements for Drug-Free Workplace (Grants)
45 CFR part 80—Nondiscrimination under programs receiving Federal assistance through the Department of Health and Human Services effectuation of title VI of the Civil Rights Act of 1964
45 CFR part 81—Practice and procedure for hearings under part 80 of this title
45 CFR part 83—Regulation for the administration and enforcement of sections 794 and 855 of the Public Health Service Act
45 CFR part 84—Nondiscrimination on the basis of handicap in programs and activities receiving or benefiting from Federal financial assistance
45 CFR part 86—Nondiscrimination on the basis of sex in education programs and activities receiving or benefiting from Federal financial assistance
45 CFR part 91—Nondiscrimination on the basis of age in HHS programs or activities receiving Federal financial assistance
45 CFR part 93—New restrictions on lobbying.

[53 FR 9116, Mar. 21, 1988, as amended at 57 FR 45736, Oct. 5, 1992; 61 FR 6124, Feb. 16, 1996]

§ 57.514 Additional conditions.

The Secretary may impose additional conditions on any grant award before or at the time of any award if he or she determines that these conditions are necessary to assure or protect the advancement of the approved activity, the interest of the public health, or the conservation of grant funds.

Subpart G [Reserved]

Subpart H—Grants for Physician Assistant Training Programs

AUTHORITY: Sec. 215 of the Public Health Service Act, 58 Stat. 690, as amended by 63 Stat. 35 (42 U.S.C. 216); sec. 783(a)(1) of the Public Health Service Act, 90 Stat. 2314, and 99 Stat. 524 (42 U.S.C. 295g–3(a)(1)); redesignated as sec. 788(d) and amended by 102 Stat. 3135 (42 U.S.C. 295g–8(d)); renumbered as sec. 750, as amended by Pub. L. 102–408, 106 Stat. 2044 (42 U.S.C. 293n).

§ 57.701 Applicability.

The regulations in this subpart apply to the award of grants to public or private nonprofit schools of medicine or osteopathic medicine, and other public or private nonprofit entities under section 750 of the Public Health Service Act (42 U.S.C. 293n) to meet the costs of projects to plan, develop, and operate or maintain programs for the training of physician assistants.

[57 FR 45736, Oct. 5, 1992; 57 FR 53815, Nov. 12, 1992; 61 FR 6124, Feb. 16, 1996]

§ 57.702 Definitions.

As used in this subpart:

Act means the Public Health Service Act, as amended.

Budget period means the interval of time into which the approved activity is divided for budgetary and reporting purposes, as specified in the grant award document.

Health professional shortage area means an area designated under section 332 of the Act.

Nonprofit refers to the status of an entity which is a corporation or association, or is owned and operated by one or more corporations or associations no part of the net earnings of which inures, or may lawfully inure, to the benefit of any private shareholder or individual.

Physician assistant means an individual who is qualified by academic and clinical training to provide patient care services under the supervision and

responsibility of a doctor of medicine or osteopathic medicine and who meets the requirements of 42 CFR 57.802.

Primary care means health care which may be initiated by the patient or the provider, or both, in a variety of settings, and which consists of a broad range of personal health care services including promotion and maintenance of health, prevention of illness and disability, basic care during acute and chronic phases of illness, guidance and counseling of individuals and families, and referral to other health care providers and community resources when appropriate. In providing the services

(1) The physical, emotional, social, and economic status of the patient is considered in the context of his or her cultural and environmental background, including the family and community, and

(2) The patient is provided timely access to the health care system.

Program for the Training of Physician Assistants or *Program* means a program for the training of physician assistants as defined in 42 CFR 57.801–57.803.

Project director means an individual designated by the grantee in the grant application and approved by the Secretary to direct the project being supported under this subpart.

Project period means the total time for which support for a project has been approved including any extensions of the project.

School of medicine or *school of osteopathic medicine* means a public or private nonprofit school which provides training leading respectively to a degree of doctor of medicine or a degree of doctor of osteopathic medicine, and which is accredited as provided in section 799(1)(E) of the Act.

Secretary means the Secretary of Health and Human Services and any other officer or employee of the Department of Health and Human Services to whom the authority involved has been delegated.

State means, in addition to the several States, the District of Columbia, the Commonwealth of Puerto Rico, the Commonwealth of the Northern Mariana Islands, the Virgin Islands, Guam, American Samoa, the Republic of Palau, the Republic of the Marshall Islands, and the Federated States of Micronesia.

Supervised clinical practice means supervised clinical practice as defined in 42 CFR 57.802.

[44 FR 36178, June 21, 1979, as amended at 52 FR 24160, June 29, 1987; 57 FR 45736, Oct. 5, 1992; 61 FR 6124, Feb. 16, 1996]

§ 57.703 Eligibility.

Any public or private nonprofit school of medicine or osteopathic medicine or public or private nonprofit entity located in a State is eligible to apply for a grant under this subpart.

[57 FR 45736, Oct. 5, 1992]

§ 57.704 Application.

(a) Each eligible applicant desiring a grant under this subpart shall submit an application in the form and at such time as the Secretary may prescribe.

(b) The application must be signed by an individual authorized to act for the applicant and to assume on behalf of the applicant the obligations imposed by the terms and conditions of any award, including the regulations of this subpart.

(c) In addition to other pertinent information which the Secretary may require, an application for a grant under this subpart must contain:

(1) A detailed description of the proposed project and of the manner in which the applicant intends to conduct the project and carry out the requirements of section 750 of the Act and this subpart, in particular, the requirements of § 57.705. This must include a budget for the proposed project and a justification for the amount of grant funds requested.

(2) A copy of all laws and regulations pertaining to the practice of physician assistants in the State or States in which the applicant's supervised clinical practice will be conducted and in which the applicant will be encouraging its graduates to work.

(3) A description of the present employment of any graduates of the program, to the extent available, and a description of the methods to be used by the program in placing its graduates.

(Approved by the Office of Management and Budget under control number 0915–0060)

[44 FR 36178, June 21, 1979, as amended at 49 FR 38112, Sept. 27, 1984; 52 FR 24160, June 29, 1987; 57 FR 45736, Oct. 5, 1992; 61 FR 6124, Feb. 16, 1996]

§ 57.705 Project requirements.

A project supported under this subpart must be conducted in accordance with the following requirements:

(a) The project must conduct its program for the training of physician assistants in accordance with the requirements in 42 CFR 57.803.

(b) The program must (1) be accredited as an Educational Program for the Physician Assistant by the American Medical Association's Committee on Allied Health Education and Accreditation, or (2) have received a Letter of Review from the Accreditation Review Committee on Education for the Physician Assistant.

(c) The program must be operational no later than 12 months after the award of a grant under this subpart.

(d) The project must be conducted under the direction of the project director who must be employed full-time at the grantee institution(s). If the project director becomes unable to function in this capacity, the Secretary must be notified as soon as possible.

(e) The project must evaluate the supervised clinical practice conducted by the program with respect to:

(1) The variety of patient contact and care experiences afforded to participating students;

(2) The adequacy and quality of supervision provided to participating students; and

(3) The adequacy of the physical setting or settings in which the supervised clinical practice takes place.

(f)(1) The project must provide on an annual basis, upon request and in a format acceptable to the Secretary, information in the aggregate regarding student characteristics, student attrition rate and student performance.

(2) The project must provide on an annual basis, upon request and in a format acceptable to the Secretary, information in the aggregate regarding the employment of its graduates including place of employment.

(Approved by the Office of Management and Budget under control number 0915–0060)

[37 FR 20543, Sept. 30, 1972, as amended at 45 FR 41420, June 19, 1980; 52 FR 24160, June 29, 1987; 57 FR 45736, Oct. 5, 1992]

§ 57.706 Evaluation of applications.

(a) As required by section 798(a) of the Act, each application for a grant under this subpart shall be submitted to a peer review group, composed principally of non-Federal experts, for an evaluation of the merits of the proposals made in the application. The Secretary may not approve such an application unless a peer review group has recommended the application for approval. The Secretary will approve or disapprove all applications filed in accordance with § 57.704, taking into consideration:

(1) The degree to which the project plan adequately provides for meeting the requirements set forth in § 57.705 and 42 CFR 57.803;

(2) The potential effectiveness of the project in carrying out the purposes of section 750 of the Act and this subpart;

(3) The capability of the applicant to carry out the proposed project;

(4) The local, regional, and national needs the project proposes to serve;

(5) The adequacy of the project's plan for placing graduates in health professional shortage areas;

(6) The soundness of the fiscal plan for assuring effective use of grant funds;

(7) The potential of the project to continue on a self-sustaining basis after the period of grant support; and

(8) The adequacy of the project's plan to develop and use methods designed to attract and maintain minority and disadvantaged students to train as physician assistants.

(b) In determining the funding of applications approved under paragraph (a) of this section, the Secretary will consider any special factors relating to national needs as the Secretary may

from time to time announce in the FEDERAL REGISTER.

[44 FR 36178, June 21, 1979, as amended at 52 FR 24160, June 29, 1987; 53 FR 14792, Apr. 26, 1988; 57 FR 45736, Oct. 5, 1992; 61 FR 6124, Feb. 16, 1996]

§ 57.707 Grant award.

(a) *General.* (1) Within the limits of funds available for this purpose, the Secretary may award grants to those applicants whose projects will, in his or her judgment best promote the purposes of section 750 of the Act as determined in accordance with § 57.706.

(2) The notice of grant award specifies the length of time the Secretary intends to support the project without requiring the project to recompete for funds. This period, called the project period, will not exceed 5 years.

(3) Neither the approval of any project nor any grant award shall commit or obligate the United States in any way to make any additional, supplemental, continuation, or other award with respect to any approved project or portion of an approved project. For continuation support, grantees must make separate application at such times and in such a form as the Secretary may prescribe.

(b) The Secretary will determine the amount of any award on the basis of his or her estimate of the sum necessary for the cost (including both direct and indirect costs) of the project.

(c) Generally, the grant will initially be funded for 1 year, and subsequent continuation awards will also be for 1 year at a time. Decisions regarding continuation awards and the funding levels of these awards will be made after consideration of such factors as the grantee's progress and management practices, existence of legislative authority, and the availability of funds. In all cases, continuation awards require a determination by the Secretary that continued funding is in the best interest of the Federal Government.

[44 FR 36178, June 21, 1979, as amended at 57 FR 45736, Oct. 5, 1992; 61 FR 6124, Feb. 16, 1996]

§ 57.708 Grant payments.

The Secretary will from time to time make payments to a grantee of all or a portion of any grant award, either in advance or by way of reimbursement.

[44 FR 36178, June 21, 1979]

§ 57.709 Purposes for which grant funds must be spent.

(a) Grant funds must be spent solely for carrying out the approved project under section 750 of the Act, these regulations, the terms and conditions of the grant award, and applicable cost principles specified in subpart Q of 45 CFR part 74.

(b) Grant funds may not be spent for sectarian instruction or for any religious purpose.

(c) Any balance of federally obligated grant funds remaining unobligated by the grantee at the end of a budget period may be carried forward provided specific approval is granted by the Secretary. If at any time during a budget period it becomes apparent to the Secretary that the amount of Federal funds awarded and available to the grantee for that period, including any unobligated balance carried forward from prior periods, exceeds the grantee's needs for the period, the Secretary may adjust the amounts awarded by withdrawing the excess. A budget period is an interval of time (usually 12 months) into which the project period is divided for funding and reporting purposes.

[44 FR 36178, June 21, 1979, as amended at 52 FR 24160, June 29, 1987; 57 FR 45736, Oct. 5, 1992; 61 FR 6124, Feb. 16, 1996]

§ 57.710 What additional Department regulations apply to grantees?

Several other regulations apply to these grants. They include, but are not limited to:

42 CFR part 50, subpart D—Public Health Service grant appeals procedure
45 CFR part 16—Procedures of the Departmental Grant Appeals Board
45 CFR part 46—Protection of human subjects
45 CFR part 74—Administration of grants
45 CFR part 75—Informal grant appeals procedures
45 CFR part 76—Governmentwide Debarment and Suspension (nonprocurement) and Governmentwide Requirements for Drug-Free Workplace (Grants)
45 CFR part 80—Nondiscrimination under programs receiving Federal assistance through the Department of Health and

Human Services effectuation of title VI of the Civil Rights Act of 1964
45 CFR part 81—Practice and procedure for hearings under part 80 of this title
45 CFR part 83—Regulation of the administration and enforcement of sections 794 and 855 of the Public Health Service Act
45 CFR part 84—Nondiscrimination on the basis of handicap in programs and activities receiving or benefiting from Federal financial assistance
45 CFR part 86—Nondiscrimination on the basis of sex in education programs and activities receiving or benefiting from Federal financial assistance
45 CFR part 91—Nondiscrimination on the basis of age in HHS programs or activities receiving Federal financial assistance.
45 CFR part 93—New restrictions on lobbying.

[52 FR 24161, June 29, 1987, as amended at 57 FR 45736, Oct. 5, 1992; 61 FR 6124, Feb. 16, 1996]

§ 57.711 What other audit and inspection requirements apply to grantees?

Each entity which receives a grant under this subpart must meet the requirements of 45 CFR part 74 concerning audit and inspection.

[61 FR 6124, Feb. 16, 1996; 61 FR 51020, Sept. 30, 1996]

§ 57.712 Additional conditions.

The Secretary may with respect to any grant award impose additional conditions prior to or at the time of any award when, in his or her judgment, these conditions are necessary to assure or protect advancement of the grant, the interest of the public health, or the conservation of grant funds.

[44 FR 36177, June 21, 1979. Redesignated at 52 FR 24161, June 29, 1987]

Subpart I—Programs for the Training of Physician Assistants

AUTHORITY: Sec. 215 of the Public Health Service Act, 58 Stat. 690, as amended by 63 Stat. 35 (42 U.S.C. 216); sec. 701(8)(B), 90 Stat. 2247, as amended by 95 Stat. 913 and 99 Stat. 525–526 (42 U.S.C. 292a(8)(B)); renumbered as sec. 750, as amended by Pub. L. 102–408, 106 Stat. 2044 (42 U.S.C. 293n).

§ 57.801 Purpose and scope.

(a) Section 750 of the Public Health Service Act (42 U.S.C. 293n) requires the Secretary to develop regulations for programs for the training of physician assistants. The purpose of this subpart is to comply with this requirement.

(b) The regulations in this subpart apply to all programs for the training of physician assistants supported under title VII of the Public Health Service Act.

[44 FR 36177, June 21, 1979, as amended at 52 FR 24160, June 29, 1987; 61 FR 6124, Feb. 16, 1996]

§ 57.802 Definitions.

For purpose of this subpart:

Academic year means the approximately 9–12 month period of time during which the program is in session.

Disease prevention is the health strategy which emphasizes the development of individual and community measures to protect against disease or environmental hazards and their harmful consequence.

Full-time student means a student who is enrolled in a program and pursuing a course of study which constitutes a full-time academic workload, as determined by the program, and which leads to a degree, diploma, or certificate of completion.

Geriatric medicine is the prevention, diagnosis, care and treatment of illness and disability as required by the distinct needs of the elderly.

Health professional shortage area means an area designated under section 322 of the Public Health Service Act.

Health promotion is the health strategy which emphasizes individual responsibility for one's health, and community efforts to maintain and enhance well-being through lifestyle changes.

Home health care is the provision of medical and other health care services to maintain or restore the health of an ill or disabled person in their place of residence.

Medical director means the individual responsible for providing competent medical direction of the program.

Physician assistant means an individual who is qualified by academic and clinical training to provide patient care services under the supervision and responsibility of a doctor of medicine

or osteopathic medicine. At a minimum, the physician assistant is competent to:

(1) Do the initial and follow-up evaluation of patients of various age groups in any setting to elicit a detailed and accurate history, perform an appropriate physical examination, and record and present pertinent data, including interpretive recommendations, in a manner meaningful to the physician;

(2) Perform or assist in the performance of routine laboratory and related studies as appropriate for a specific practice setting, such as blood studies, urinalyses, and electrocardiographic tracings;

(3) Perform routine therapeutic procedures such as injections, immunizations, and the assessment, suturing, and care of wounds;

(4) Instruct and counsel patients regarding physical and mental health, including matters such as nutrition, illness, treatment, normal growth and development, and age, sex, or lifestyle risk factors;

(5) Perform the following functions in a hospital setting: patient work-ups, making patient rounds, recording patient progress notes, accurately and appropriately transcribing or executing standing orders and other specific orders at the direction of the supervising physician, and compiling and recording detailed progress reports and narrative case summaries;

(6) Deliver or assist in the delivery of services, including the review and monitoring of treatment and therapy plans, to patients requiring initial or continuing care in settings other than a hospital, such as the home, nursing homes, and extended care facilities;

(7) Evaluate and treat life-threatening emergency situations;

(8) Interact with those community health services and other community resources which will facilitate the patient's care and continuity of care.

Primary care means primary care, as defined in 42 CFR 57.702.

Supervised clinical practice means direct participation in patient care by observation, examination, and performance of procedures as are appropriate for the assigned role of the student for the purposes of instruction under the guidance and responsibility of a physician who holds a full and unrestricted license in the State in which the supervised clinical practice is located.

[44 FR 36177, June 21, 1979, as amended at 52 FR 24160, June 29, 1987; 57 FR 45737, Oct. 5, 1992]

§ 57.803 Requirements.

A program for the training of physician assistants must:

(a)(1) Be accredited as an Educational Program for the Physician Assistant by the American Medical Association's Committee on Allied Health Education and Accreditation; or

(2) Have received a Letter of Review from the Accreditation Review Committee on Education for the Physician Assistant for its plans for a program for the training of physician assistants;

(b) Have a medical director who is licensed to practice medicine or osteopathic medicine in the State in which the program is located (or any State if the program is conducted by a Federal health facility) and who is experienced in the delivery of the type of health care services for which the program provides training;

(c) Have an enrollment of not less than eight full-time students in each class;

(d) Be a minimum of 1 academic year in length;

(e) Consist of supervised clinical practice and at least 4 months (in the aggregate) of classroom instruction;

(f) Provide training to students in the areas of primary care, health promotion, disease prevention, geriatric medicine and home health care;

(g) Develop and use methods designed to encourage graduates of the program to work in health professional shortage areas, such as periods of supervised clinical practice in those areas;

(h) Develop and use methods for placing graduates in positions for which they have been trained, including methods for placing graduates in positions in health professional shortage areas; and

(i) Develop and use a method for evaluating the effectiveness of the program in training physician assistants, including:

(1) Evaluation by faculty and students of the program in relation to its objectives;

(2) Evaluation of student performance in classroom instruction and supervised clinical practice; and

(3) Evaluation of the number of graduates employed and the characteristics of their employment, such as geographical location, setting, and functions performed; and

(4) Award a degree, diploma, or certificate of completion to individuals who have successfully completed the program.

[44 FR 36177, June 21, 1979, as amended at 52 FR 24160, June 29, 1987; 57 FR 45737, Oct. 5, 1992]

Subparts J–K [Reserved]

Subpart L—Grants for Residency Training and Advanced Education in the General Practice of Dentistry

AUTHORITY: Sec. 215 of the Public Health Service Act, 58 Stat. 690, as amended by 63 Stat. 35 (42 U.S.C. 216); sec. 786(b) of the Public Health Service Act, 90 Stat. 2317, as amended by 99 Stat. 540–541 (42 U.S.C. 295g–6(b)); redesignated as sec. 785 and amended by 102 Stat. 3130–3131 (42 U.S.C. 295g–5); renumbered as sec. 749, as amended by Pub. L. 102–408, 106 Stat. 2043–2044 (42 U.S.C. 293m).

§ 57.1101 To what projects do these regulations apply?

These regulations apply to the award of grants under section 749 of the Public Health Service Act (42 U.S.C. 293m) to public or private nonprofit schools of dentistry and to accredited postgraduate dental training institutions to meet the costs of projects to:

(a) Plan, develop and operate an approved residency training program in the general practice of dentistry or an approved advanced educational program in the general practice of dentistry; and

(b) Provide financial assistance (in the form of traineeships and fellowships) to participants in such a program who are in need of financial assistance and who plan to practice general dentistry.

[52 FR 19145, May 21, 1987, as amended at 57 FR 45737, Oct. 5, 1992; 61 FR 6124, Feb. 16, 1996]

§ 57.1102 Definitions.

As used in this subpart:

Accredited postgraduate dental training institution means a public or private nonprofit institution which operates a postgraduate dental training program that has received an accreditation classification of ''accreditation eligible,'' ''preliminary provisional approval,'' ''provisional approval,'' ''conditional approval,'' or ''approval'' by the Commission on Dental Accreditation.

Act means the Public Health Service Act, as amended.

Approved residency training program, approved advanced educational program, or *program* means a general practice residency program or an advanced educational program in general dentistry which has received an accreditation classification of ''accreditation eligible,'' ''preliminary provisional approval,'' ''provisional approval,'' ''conditional approval,'' or ''approval'' by the Commission on Dental Accreditation.

Budget period means an interval of time into which the project period is divided for budgetary purposes, as specified in the grant award document.

Nonprofit refers to the status of an entity which is a corporation or association, or is owned or operated by one or more corporations or associations no part of the net earnings of which inures, or may lawfully inure, to the benefit of any private shareholder or individual.

Practice of general dentistry means a practice of dentistry in which the dentist:

(1) Serves as a patient's first contact with the dental care system and provides the means of timely entry into that system;

(2) Evaluates the patient's general medical status and relates this to anticipated dental treatment;

(3) Assumes continuing responsibility for the patient's dental care and provides a comprehensive range of services

which will minimize the need for patient referral; and

(4) Coordinates dental treatment provided by dental specialists and by dental auxiliary personnel, including dental hygienists, dental assistants, and expanded function dental auxiliaries.

Project period means the total time for which support for a project has been approved, including any extensions thereof.

School of dentistry means a public or private nonprofit school which provides training leading to a degree of doctor of dentistry or an equivalent degree and which is accredited as provided in section 799(1)(E) of the Act.

Secretary means the Secretary of Health and Human Services, and any other officer or employee of the Department of Health and Human Services to whom the authority involved has been delegated.

State means, in addition to the several States, the District of Columbia, the Commonwealth of Puerto Rico, the Commonwealth of the Northern Mariana Islands, the Virgin Islands, Guam, American Samoa, the Republic of Palau, the Republic of the Marshall Islands, and the Federated States of Micronesia.

[43 FR 54931, Nov. 24, 1978, as amended at 52 FR 19145, May 21, 1987; 57 FR 45737, Oct. 5, 1992; 61 FR 6124, Feb. 16, 1996]

§ 57.1103 What entities are eligible to apply for a grant?

Any public or private nonprofit school of dentistry or accredited postgraduate dental training institution located in a State is eligible to apply for a grant.

[57 FR 45737, Oct. 5, 1992]

§ 57.1104 How must an entity apply for a grant?

(a) To apply for a grant under this subpart, each entity shall submit an application in the form and at such time as the Secretary may prescribe.

(b) The application must be signed by an individual authorized to act for the applicant and to assume, on behalf of the applicant, the obligations imposed by the terms and conditions of any award including the regulations of this subpart.

(c) In addition to other pertinent information that the Secretary may require, an application for a grant under this subpart must contain:

(1) A full and adequate description of the proposed project and of the manner in which the applicant intends to conduct the project and carry out the requirements of this subpart; and

(2) A budget justification for the funds requested. If the applicant requests funds for stipend support of participants, the applicant must provide evidence showing that income available from other sources, including income derived from services of the participants in the program, will be insufficient to pay their stipends and that grant funds will not be used to supplant other available funds.

(Approved by the Office of Management and Budget under control number 0915–0060)

[43 FR 54931, Nov. 24, 1978, as amended at 49 FR 38112, Sept. 27, 1984; 52 FR 19145, May 21, 1987; 57 FR 45737, Oct. 5, 1992; 62 FR 51374, Oct. 1, 1997]

§ 57.1105 What requirements must a project meet?

A project supported under this subpart must meet the following requirements:

(a) The general practice residency or advanced education program in general dentistry must be accredited by the American Dental Association Commission on Dental Accredation;

(b) Each project must have at least two participants enrolled in the training program; and

(c) Each participant who receives stipend support must sign a statement of intent to work in the practive of general dentistry.

[62 FR 51374, Oct. 1, 1997]

§ 57.1106 How will applications be evaluated?

(a) As required by section 798(a) of the Act, each application for a grant under this subpart shall be submitted to a peer review group, composed principally of non-Federal experts, for an evaluation of the merits of the proposal as contained in the application. The Secretary may not approve such an application unless a peer review

group has recommended the application for approval. The Secretary will award grants to applicants whose projects will best promote the purposes of section 749 of the Act. The Secretary will approve or disapprove applications filed in accordance with §7thnsp;57.1104, taking into consideration, among other factors, the degree to which:

(1) The proposal addresses the legislative intent of the program and has a well-documented rationale;

(2) The objectives of the proposed project are consistent with the program's rationale, and are measurable and achievable within the project period;

(3) The proposed project's methodology is consistent with the objectives and explained in appropriate detail;

(4) The evaluation is linked to the objectives and addresses the project outcomes;

(5) The applicant demonstrates the administrative and managerial capability to carry out the proposed project;

(6) The proposed budget is complete, appropriate, cost-effective, and clearly justified;

(7) The plan for institutionalizing the project outcomes is specific and realistic; and

(8) The proposal plans to attract, maintain, and graduate minority and disadvantaged students.

(b) In determining the funding of applications approved under paragraph 9a) of this section, the Secretary will consider any special factors relating to national needs as the Secretary may from time to time announce in the FEDERAL REGISTER.

[62 FR 51374, Oct. 1, 1997]

§ 57.1107 How will grant awards be made?

(a) *General.* (1) Within the limit of funds available, the Secretary will award grants to those applicants whose approved projects will, in his or her judgment, best promote the purposes of section 749 of the Act, as determined in accordance with § 57.1106.

(2) The notice of grant award specifies the length of time the Secretary intends to support the project without requiring the project to recompete for funds. This period, called the project period, will not exceed 3 years.

(3) Generally, the grant will initially be funded for 1 year, and subsequent continuation awards will also be for 1 year at a time. Decisions regarding continuation awards and the funding levels of these awards will be made after consideration of such factors as the grantee's progress and management practices, existence of legislative authority, and the availability of funds. In all cases, continuation awards require a determination by the Secretary that continued funding is in the best interest of the Federal Government.

(4) Neither the approval of any project nor the award of any grant shall commit or obligate the United States in any way to make any additional, supplemental, continuation or other award with respect to any approved project or any portion of an approved project. For continuation support, grantees must make separate application at such times and in such a form as the Secretary may prescribe.

(b) *Determination of grant amount.* The Secretary will determine the amount of any award under this subpart on the basis of his or her estimate of the sum necessary for the cost (including both direct and indirect costs) of the project. In addition, in determining the amount of stipend support to be made available for the general practice residency program, the amount of any stipend must be limited to that portion of the annual amount normally paid to other residents by the applicant which the Secretary determines, on the basis of the documentation required in the application, cannot reasonably be paid from other available funds, including the incomes derived from the residents' services. For the advanced educational program in general dentistry, stipends for participants (who are postdoctoral students) must be paid in accordance with established Public Health Service postdoctoral stipend rates.

[43 FR 54931, Nov. 24, 1978, as amended at 57 FR 45737, Oct. 5, 1992; 61 FR 6125, Feb. 16, 1996]

§ 57.1108 How will grant payments be made?

The Secretary will, from time to time, make payments to a grantee of all or a portion of any grant award, either in advance or by way of reimbursement.

[43 FR 54931, Nov. 24, 1978]

§ 57.1109 Purposes for which grant funds may be spent.

(a) A grantee shall only spend funds it receives under this subpart according to the approved application and budget, the authorizing legislation, terms and conditions of the grant award, applicable cost principles specified in subpart Q of 45 CFR part 74, and these regulations.

(b) Any balance of federally obligated grant funds remaining unobligated by the grantee at the end of a budget period may be carried forward provided specific approval is granted by the Secretary. If at any time during a budget period it becomes apparent to the Secretary that the amount of Federal funds awarded and available to the grantee for that period, including any unobligated balance carried forward from prior periods, exceeds the grantee's needs for the period, the Secretary may adjust the amounts awarded by withdrawing the excess. A budget period is an interval of time (usually 12 months) into which the project period is divided for funding and reporting purposes.

(c) Grants funds may not be used for sectarian instruction or for any religious purpose.

[43 FR 54931, Nov. 24, 1978, as amended at 52 FR 19146, May 21, 1987; 57 FR 45738, Oct. 5, 1992]

§ 57.1110 What additional Department regulations apply to grantees?

Several other regulations apply to grants under this subpart. These include, but are not limited to:

42 CFR part 50, subpart D—Public Health Service grant appeals procedure

45 CFR part 16—Procedures of the Departmental Grant Appeals Board

45 CFR part 46—Protection of human subjects

45 CFR part 74—Administration of grants

45 CFR part 75—Informal grant appeals procedures

45 CFR part 76—Governmentwide debarment and suspension (nonprocurement) and governmentwide requirements for drug–free workplace (grants)

45 CFR part 80—Nondiscrimination under programs receiving Federal assistance through the Department of Health and Human Services effectuation of title VI of the Civil Rights Act of 1964

45 CFR part 81—Practice and procedure for hearings under part 80 of this title

45 CFR part 83—Regulation for the administration and enforcement of section 794 and 855 of the Public Health Service Act

45 CFR part 84—Nondiscrimination on the basis of handicap in programs and activities receiving or benefiting from Federal financial assistance

45 CFR part 86—Nondiscrimination on the basis of sex in education programs and activities receiving or benefiting from Federal financial assistance

45 CFR part 91—Nondiscrimination on the basis of age in HHS programs or activities receiving Federal financial assistance

45 CFR part 93—New restrictions on lobbying.

[52 FR 19146, May 21, 1987, as amended at 57 FR 45738, Oct. 5, 1992; 61 FR 6125, Feb. 16, 1996]

§ 57.1111 What other audit and inspection requirements apply to grantees?

Each entity which receives a grant under this subpart must meet the requirements of 45 CFR part 74 concerning audit and inspection.

[61 FR 6125, Feb. 16, 1996; 61 FR 51020, Sept. 30, 1996]

§ 57.1112 What additional conditions apply to grantees?

The Secretary may with respect to any grant award impose additional conditions prior to or at the time of any award when in his or her judgment these conditions are necessary to assure or protect the advancement of the approved activity, the interest of the public health, or the conservation of grant funds.

[43 FR 54931, Nov. 24, 1978. Redesignated at 52 FR 19146, May 21, 1987; 57 FR 45738, Oct. 5, 1992]

Subparts M–O [Reserved]

Subpart P—Loan Guarantees and Interest Subsidies to Assist in Construction of Teaching Facilities for Health Profession Personnel

AUTHORITY: Sec. 727, Public Health Service Act. 77 Stat. 170, as amended (42 U.S.C. 293g).

SOURCE: 38 FR 31836, Nov. 19, 1973, unless otherwise noted.

§ 57.1501 Applicability.

The regulations of this subpart are applicable to loan guarantees and interest subsidy payments made pursuant to section 729 of the Public Health Service Act (42 U.S.C. 293i) to assist nonprofit private entities which are eligible for grants under subpart B of this part in carrying out projects for construction of teaching facilities for health professions personnel.

§ 57.1502 Definitions.

As used in this subpart:

(a) All terms not defined herein shall have the same meanings as given them in section 724 of the Act.

(b) *Act* means the Public Health Service Act, as amended.

(c) *Secretary* means the Secretary of Health and Human Services and any other officer or employee of the Department of Health and Human Services to whom the authority involved may be delegated.

(d) *School* means a school of medicine, dentistry, osteopathy, pharmacy, optometry, podiatry, veterinary medicine, or public health which provides a course of study or a portion thereof which leads respectively to a degree of doctor of medicine, doctor of dental surgery or an equivalent degree, doctor of osteopathy, doctor of optometry or an equivalent degree, doctor of podiatry or an equivalent degree, bachelor of science in pharmacy or an equivalent degree, doctor of veterinary medicine or an equivalent degree, or a graduate degree in public health, and which is accredited as provided in section 721(b)(1) of the Act.

(e) *Affiliated hospital* or *affiliated outpatient facility* means a hospital or outpatient facility (as defined in section 645 of the Act) which, although not owned by such school, has a written agreement with a school of medicine, osteopathy, or dentistry eligible for assistance under subpart B of this part, providing for effective control by the school of the health professions teaching program in the hospital or outpatient facility.

(f) *Nonprofit* as applied to any school, hospital, outpatient facility, or other entity means one which is owned and operated by one or more corporations or associations no part of the net earnings of which inures, or may lawfully inure to the benefit of any private shareholder or individual.

(g) *Council* means the National Advisory Council on Health Professions Education (established pursuant to section 725 of the Act).

§ 57.1503 Eligibility.

(a) *Eligible applicants.* In order to be eligible for a loan guarantee or interest subsidy under this subpart, the applicant shall:

(1) Be a nonprofit private school of medicine, dentistry, osteopathy, pharmacy, optometry, podiatry, veterinary medicine, or public health, or any combination of such schools, or a nonprofit private affiliated hospital or affiliated outpatient facility: *Provided, however,* That in the case of an affiliated hospital or affiliated outpatient facility, an application which is approved by the school of medicine, osteopathy or dentistry with which the hospital or outpatient facility is affiliated and which otherwise complies with the requirements of subpart B of this part may be filed by any nonprofit private entity qualified to file an application under section 605 of the Act; and

(2) Otherwise meet the applicable requirements set forth in section 721(b) of the Act and § 57.103 with respect to eligiblity for grants for construction of teaching facilities for health professions personnel.

(b) *Eligible loans.* Subject to the provisions of this subpart, the Secretary may guarantee payment, when due, of principal and interest on, or may pay interest subsidies with respect to, or may both guarantee and pay interest subsidies with respect to any loan or

portion thereof made to an eligible applicant by a non-Federal lender: *Provided,* That no such guarantee or interest subsidy shall apply to any loan the interest on which is exempt from Federal income taxation.

§ 57.1504 Application.

Each applicant desiring to have a loan guaranteed or to have interest subsidies paid on its behalf, or any combination of such loan guarantee or interest subsidies, shall submit an application for such assistance in such form and manner and at such time as the Secretary may require.[1]

(a) The application shall contain or be supported by such information as the Secretary may require to enable him to make the determinations required of him under the Act and this subpart.

(b) The application shall be executed by an individual authorized to act for the applicant and to assume on behalf of the applicant the obligations imposed by the terms and conditions of any loan guarantee or agreement to pay interest subsidies, including the applicable regulations of this subpart.

[38 FR 31836, Nov. 19, 1973, as amended at 49 FR 38113, Sept. 27, 1984]

§ 57.1505 Approval of applications.

(a) *General.* Any application for loan guarantee or interest subsidies, or for a combination of both, may be approved by the Secretary, after consultation with the Council, only if he makes each of the applicable determinations set forth in section 721(c) of the Act. In addition:

(1) Any such approval shall be subject to compliance by the applicant with the applicable provisions set forth in §§ 57.106, 57.107, 57.108, and 57.110: *Provided however,* That for purposes of the title assurance in § 57.107(a) the period shall be not less than 20 years or the term of the guaranteed loan, whichever is longer or in the case of interim facilities, the term of the guaranteed loan, and

(2) Any such application may be approved by the Secretary only if he determines:

(i) That the applicant will have sufficient financial resources to enable him to comply with the terms and conditions of the loan;

(ii) That the applicant has the necessary legal authority to finance, construct, and maintain the proposed project, to apply for and receive the loan, and to pledge or mortgage any assets or revenues to be given as security for such loan;

(iii) That the loan will be made only with respect to the initial permanent financing of the project;

(iv) That the loan will be secured by a lien against the facilities to be constructed or against other security satisfactory to the Secretary specified in § 57.2210;

(v) That the rate of interest on the loan does not exceed such percent per annum as the Secretary determines to be reasonable, taking into account the range of interest rates prevailing in the private market for similar loans and the risks assumed by the United States; and

(vi) Such additional determinations as the Secretary finds necessary with respect to particular applications in order to protect the financial interests of the United States.

(b) *Loan guarantees.* In addition to the requirements of paragraph (a) of this section, any application for a loan guarantee may be approved by the Secretary only if he determines that the loan with respect to which such guarantee is sought would not be available to the applicant on reasonable terms and conditions without such guarantee. To assist the Secretary in making such determination, each applicant for a loan guarantee shall submit statements from at least three non-Federal institutions normally engaged in making long-term loans for construction, describing whether, and the terms and conditions under which, each institution would make a loan to the applicant for the project described in the application.

(c) *Interest subsidies.* In addition to the requirements of paragraph (a) of

[1] Applications and instructions are available from the Division of Facilities Conversion and Utilization, Bureau of Health Maintenance Organizations and Resources Development, Parklawn Building, 5600 Fishers Lane, Rockville, MD 20857.

this section, any application for interest subsidies may be approved by the Secretary only if he determines that without such interest subsidy payments the applicant would not, over a substantial portion of the loan term, be able to repay the principal and interest of the loan without jeopardizing the quality of the educational program.

§ 57.1506 Priority.

(a) Priority in approving applications for loan guarantee and/or interest subsidies shall be determined in accordance with the factors specified in section 721(d) of the Act, and the following: (1) The relative need for increased enrollment and the availability of students; (2) the relative effectiveness of the project relative to the cost to the Federal Government; and (3) the relative ability of the applicant to make efficient and productive use of the facility constructed.

(b) In the case of applications to aid in the construction of new schools of medicine, osteopathy, or dentistry, the Secretary shall give special consideration to those applications which contain or are reasonably supported by assurances that, because of the use that will be made by such school of already existing facilities (including Federal medical or dental facilities), the school will be able to accelerate the date on which it will begin its teaching program.

§ 57.1507 Limitations applicable to loan guarantee.

(a) The amount of loan with respect to which a guarantee is made under this subpart shall be determined by the Secretary based upon such considerations as the availability of funds and the applicant's need therefor; *Provided*, That: (1) Subject to paragraph (a)(2) of this section, no loan with respect to which a guarantee is made for any project under this subpart may be in an amount which, when added to the amount of any grant made with respect to such project under part B of title VII of the Act or any other law of the United States, or to the total of such grants, exceeds 90 percent of the eligible cost of construction of such project as determined by the Secretary;

(2) Notwithstanding paragraph (a)(1) of this section, the Secretary may in particular cases guarantee loans in excess of the amount specified in paragraph (a)(1) of this section where he determines that, because of special circumstances, such additional loan guarantee will further the purposes of part B of title VII of the Act. In making such determinations, the Secretary will in each case consider the following factors:

(i) The need for the project in the area to be served;

(ii) The availability of financing for the project on reasonable terms and conditions without such additional loan guarantee;

(iii) Whether the project can be constructed without such additional loan guarantee; and

(iv) Other relevant factors consistent with the purpose of part B of title VII of the Act and this subpart.

(3) In determining the cost of construction of the project there shall be excluded from such cost all fees, interest, and other charges relating or attributable to the financing of the project except the following:

(i) Reasonable fees attributable to services rendered by legal counsel in connection with such loan;

(ii) With the approval of the Secretary, reasonable fees attributable to the services of a financial advisor in assisting the applicant in securing the loan and arranging for repayment thereof; and

(iii) Interest attributable to the interim financing of construction of the project prior to the initial permanent financing thereof.

(b) No loan guarantee under this subpart shall apply to more than 90 percent of the loss of principal of and interest on such loan incurred by the holder of such loan upon default by the applicant.

§ 57.1508 Amount of interest subsidy payments; limitations.

The length of time for which interest subsidy payments will be made under the agreement, the amount of loan with respect to which such payments will be made, and the level of such payments shall be determined by the Secretary on the basis of the availability

of funds and his determination of the applicant's need therefor taking into consideration his analysis of the present and reasonable projected future financial ability of the applicant to repay the principal and interest of the loan without jeopardizing the quality of its educational program: *Provided however,* That each such interest subsidy payment shall not exceed the amount necessary to reduce by 3 percent per annum the net effective interest rate otherwise payable on the loan or the portion thereof with respect to which such interest subsidy is paid.

§ 57.1509 Forms of credit and security instruments.

Each loan with respect to which a guarantee is made or interest subsidies are paid under this subpart shall be evidenced by a credit instrument and secured by a security instrument in such forms as may be acceptable to the Secretary.

§ 57.1510 Security for loans.

Each loan with respect to which a guarantee is made or interest subsidies are paid under this subpart shall be secured in a manner which the Secretary finds reasonably sufficient to insure repayment. The security may be one or a combination of the following:

(a) A first mortgage on the facility and site thereof.

(b) Negotiable stocks or bonds of a quality and value acceptable to the Secretary.

(c) A pledge of unrestricted and unencumbered income from an endowment or other trust fund acceptable to the Secretary.

(d) A pledge of a specified portion of annual general or special revenues of the applicant acceptable to the Secretary.

(e) Such other security as the Secretary may find acceptable in specific instances.

§ 57.1511 Opinion of legal counsel.

At appropriate stages in the application and approval procedure for a loan guarantee or interest subsidy, the applicant shall furnish to the Secretary a memorandum or opinion of legal counsel with respect to the legality of any proposed note issue, the legal authority of the applicant to issue the note and secure it by the proposed collateral, and the legality of the issue upon delivery. ''Legal counsel'' means either a law firm or individual lawyer, thoroughly experienced in the long-term financing of construction projects, and whose approving opinions have previously been accepted by lenders or lending institutions. The legal memorandum or opinion to be provided by legal counsel in each case shall be as follows:

(a) A memorandum, submitted with the application for a loan guarantee or interest subsidy, stating that the applicant is or will be lawfully authorized to finance, construct, and maintain the project, and to issue the proposed obligations and to pledge or mortgage the assets and/or revenues offered to secure the loan, citing the basis for such authority; and

(b) A final approving opinion, delivered to the Secretary at the time of delivery of the evidence of indebtedness to the lender, stating that the credit and security instruments executed by the applicant are duly authorized and delivered and that the indebtedness of the applicant is valid, binding, and payable in accordance with the terms on which the loan guarantee was approved by the Secretary.

§ 57.1512 Length and maturity of loans.

The repayment period for loans with respect to which guarantees are made or interest subsidies paid under this subpart shall be limited to 30 years: *Provided,* That:

(a) The Secretary may, in particular cases where he determines that a repayment period of less than 30 years is more appropriate to an applicant's total financial plan, approve such shorter repayment period;

(b) The Secretary may, in particular cases where he determines that, because of unusual circumstances, the applicant would be financially unable to amortize the loan over a repayment period of 30 years, approve a longer requirement period which shall in no case exceed 40 years; and

(c) In no case shall a loan repayment period exceed the useful life of the facility to be constructed with the assistance of the loan.

§ 57.1513 Repayment.

Unless otherwise specifically authorized by the Secretary, each loan with respect to which a guarantee is made or interest subsidies are paid shall be repayable in substantially level total annual installments of principal and interest, sufficient to amortize the loan through the final year of the life of the loan.

§ 57.1514 Loan guarantee and interest subsidy agreements.

For each application for a loan guarantee or interest subsidy, or combination thereof, which is approved by the Secretary under this subpart, an offer to guarantee such loan and/or make interest subsidy payments with respect thereto will be sent to the applicant, setting forth the pertinent terms and conditions for the loan guarantee and/or interest subsidy, and will be conditioned upon the fulfillment of such terms and conditions. The accepted offer will constitute the loan guarantee agreement, the interest subsidy agreement, or the loan guarantee and interest subsidy agreement, as the case may be. Each such agreement shall include the applicable provisions set forth below:

(a) *Loan guarantee.* Each agreement pertaining to a loan guarantee shall include the following provisions:

(1) That the loan guarantee evidenced by the agreement shall be incontestable (i) in the hands of the applicant on whose behalf such loan guarantee is made except for fraud or misrepresentation on the part of such applicant, and (ii) as to any person who makes or contracts to make a loan to such applicant in reliance on such guarantee, except for fraud or misrepresentation on the part of such other person.

(2) That the applicant shall be permitted to prepay up to 15 percent of the original principal amount of such loan in any calendar year without additional charge. The applicant and the lender may further agree that the applicant shall be permitted to prepay in excess of 15 percent of the original amount of the loan in any calendar year without additional charge, but no such payment in excess of 15 percent shall be made without the prior written approval of the Secretary.

(3) That if the applicant shall default in making periodic payment, when due, of the principal and interest on the loan guaranteed under the agreement, the holder of the loan shall promptly give the Secretary written notification of such default. The Secretary shall, immediately upon receipt of such notice, provide the holder with written acknowledgement of such receipt.

(4) That if such default in making periodic payment when due of the principal and interest on the guaranteed loan is not cured within 90 days after receipt by the Secretary of notice of such default, the holder of the loan shall have the right to make demand upon the Secretary, in such form and manner as the Secretary may prescribe, for payment of 90 percent of the amount of the overdue payments of principal and accrued interest, together with such reasonable late charges as are made in accordance with the terms of the credit instrument or security instrument evidencing or securing such loan. The Secretary shall pay such amount from funds available to him for these purposes.

(5) That in the event of exercise by the holder of the loan of any right to accelerate payment of such loan as a result of the applicants default in making periodic payment when due of the principal and interest on the guaranteed loan, the Secretary shall, upon demand by the holder not less than 90 days after receipt by the Secretary of notification of such default, pay to such holder 90 percent of the total amount of principal and of interest on the loan remaining unpaid after the holder has exercised his right to foreclose upon and dispose of the security and has applied the proceeds thereby received to reduce the outstanding balance of the loan, in accordance with applicable law and the terms of the security instrument.

(6) That the Secretary shall not guarantee any funds which are disbursed by a lender following notification by the Secretary to such lender that the Assurance executed by the Applicant

under section 799A of the Act is no longer satisfactory.

(b) *Interest subsidy.* Each agreement pertaining to the payment of interest subsidies with respect to a loan shall include the following provisions:

(1) That the holder of the loan shall have a contractual right to receive from the United States interest subsidy payments in amounts sufficient to reduce by up to 3 percent per annum the net effective interest rate determined by the Secretary to be otherwise payable on such loan.

(2) That payments of interest subsidies pursuant to paragraph (b)(1) of this section will be made by the Secretary, in accordance with the terms of the loan with respect to which the interest subsidies are paid, directly to the holder of such loan, or to a trustee or agent designated in writing to the Secretary by such holder, until such time as the Secretary is notified in writing by the holder that such loan has been transferred. Pursuant to such written notification of transfer, the Secretary will make such interest payments directly to the new holder (transferee) of the loan: *Provided, however,* That it shall be the responsibility of the holder to remit any payments of interest subsidy to the new holder which the Secretary may have made to the holder after such transfer and prior to receipt of such written notice, and the Secretary shall not be liable to any party for amounts remitted to the holder prior to receipt of such written notice and acknowledgment in writing by the Secretary of receipt of such notice.

(3) That the holder of the loan will promptly notify the Secretary of any default or prepayment by the applicant with respect to the loan.

(4) In the event of any exercise by the holder of the loan of the right to accelerate payment of such loan, whether as a result of default on the part of the applicant or otherwise, the Secretary's obligations with respect to the payment of interest subsidies shall cease.

(5) Where, during the life of the loan with respect to which interest subsidies are to be paid, the applicant ceases to use the facility for the purposes for which constructed, the Secretary's obligation with respect to the payment of interest subsidies shall cease: *Provided, however,* That where the applicant is continuing to use the facility for purposes eligible for support under part B of title VII of the act, the Secretary may make a determination, based upon the health manpower needs of the community served by the facility as well as other relevant factors, to continue to make interest subsidy payments in accord with the agreement.

(6) Where during the life of the loan with respect to which interest subsidies are to be paid, it is determined, after an opportunity for a hearing pursuant to 45 CFR part 83, that the Assurance executed by the applicant under section 704 (or its predecessor, section 799A) of the Act, is no longer satisfactory, the Secretary's obligation with respect to the payment of interest subsidies shall cease: *Provided, however,* That the Secretary shall resume making interest subsidy payments if he determines that a subsequent Assurance submitted by the applicant is satisfactory.

(7) Where during the life of the loan with respect to which interest subsidies are to be paid, it is determined by the Secretary, after an opportunity for a hearing pursuant to 45 CFR parts 80 and 81, that the applicant has ceased to comply with the Assurance it has executed under 45 CFR 80.4(d) concerning nondiscrimination on the basis of race, color or national origin, the Secretary's obligation with respect to the payment of interest subsidies shall cease: *Provided, however,* That the Secretary shall resume making interest subsidy payments if he subsequently determines that the applicant has come into compliance with the requirements of title VI of the Civil Rights Act of 1964 and implementing regulations.

(8) Where during the life of the loan with respect to which interest subsidies are to be paid, it is determined by the Secretary after an opportunity for a hearing pursuant to title IX of the Education Amendments of 1972, that the applicant has ceased to comply with such title, and its implementing regulations, the Secretary's obligation with respect to the payment

of interest subsidies shall cease: *Provided, however,* That the Secretary shall resume making interest subsidy payments if he subsequently determines that the applicant has come into compliance with the requirements of title IX of the Education Amendments of 1972 and implementing regulations.

(c) *General.* In addition to the applicable requirements of paragraphs (a) and (b) of this section, each agreement, whether pertaining to a loan guarantee or interest subsidy or both, shall contain such other provisions as the Secretary finds necessary in order to protect the financial interests of the United States.

[38 FR 31836, Nov. 19, 1973, as amended at 49 FR 38113, Sept. 27, 1984]

§ 57.1515 Loan closing.

Closing of any loan with respect to which a guarantee is made or interest subsidies are paid under this subpart shall be accomplished at such time as may be agreed upon by the parties to such loan and found acceptable to the Secretary.

§ 57.1516 Right of recovery-subordination.

(a) The United States shall be entitled to recover from the applicant for a loan guarantee under this subpart the amount of any payment made pursuant to such guarantee, unless the Secretary waives such right of recovery as provided in § 57.1517.

(b) Upon making of any payments pursuant to a loan guarantee under this subpart, the United States shall be subrogated to all of the rights of the recipient of the payments with respect to which the guarantee was made.

§ 57.1517 Waiver of right of recovery.

In determining whether there is good cause for waiver of any right of recovery which he may have against any applicant by reason of any payments made pursuant to a loan guarantee under this subpart, the Secretary shall take into consideration the extent to which:

(a) The facility with respect to which the loan guarantee was made will continue to be devoted by the applicant or other owner to the teaching of health professions personnel, or to other purposes in the sciences related to health for which funds are available under part B of title VII of the act and these regulations;

(b) A hospital or outpatient facility will be used as provided for under title VI of the act;

(c) There are reasonable assurances that for the remainder of the repayment period of the loan other facilities not previously utilized for the purpose for which the facility was constructed will be so utilized and are substantially equivalent in nature and extent for such purposes; and

(d) Such recovery would seriously curtail the training of qualified health professions personnel in the area served by the facility.

§ 57.1518 Modification of loans.

No official of the Department of Health and Human Services will approve any proposal to modify the terms of a loan guaranteed under title VII of the Public Health Service Act (42 U.S.C. 293 *et seq.*) and this subpart which would permit the use of the guaranteed loan (or the guarantee) as collateral for an issue of tax-exempt securities.

(Secs. 215 and 726, Public Health Service Act, 58 Stat. 690 and 85 Stat. 432, 42 U.S.C. 216 and 293i, as amended).

[48 FR 42984, Sept. 21, 1983]

Subpart Q—Grants for Predoctoral, Graduate, and Faculty Development Education Programs in Family Medicine

AUTHORITY: Sec. 215 of the Public Health Service Act, 58 Stat. 690, as amended by 63 Stat. 35 (42 U.S.C. 216); sec. 786(a) of the Public Health Service Act, 90 Stat. 2316, and as amended by 102 Stat. 3146 (42 U.S.C. 295g–6(a)); renumbered as sec. 747, as amended by Pub. L. 102–408, 106 Stat. 2042–2043 (42 U.S.C. 293k).

§ 57.1601 To what programs do these regulations apply?

These regulations apply to the award of grants under section 747 of the Public Health Service Act (42 U.S.C. 293k) to schools of medicine or osteopathic medicine, hospitals, and other public or

private nonprofit entities for projects to: (a) Plan, develop, and operate, or participate in predoctoral, graduate, or faculty development educational programs in family medicine; and (b) provide financial assistance to trainees participating in predoctoral or graduate educational programs who are in need of financial assistance and who plan to practice family medicine or to trainees in faculty development programs who plan to teach in family medicine training programs.

[57 FR 45738, Oct. 5, 1992, as amended at 61 FR 6125, Feb. 16, 1996]

§ 57.1602 Definitions.

Act means the Public Health Service Act, as amended.

Clerkship means supervised clinical training in a specific field of medicine for predoctoral medical (M.D. or D.O.) students.

Faculty development program means a systematic training program to increase faculty competence in teaching skills and in other areas related to academic responsibilities.

Family medicine means the field of medicine, including osteopathic general practice, in which the physician:

(a) Serves as a physician of first contact with families and with patients of all ages and provides a means of entry into the health care system;

(b) Evaluates the patient's total health needs, provides personal medical care within one or more fields of medicine, and refers the patient, when indicated, to appropriate sources of care while preserving the continuity of care;

(c) Assumes responsibility with the patient for comprehensive and continuous health care and acts as a leader or coordinator of others providing health services; and

(d) Considers the patient's total health care within the context of his or her environment, including the community and the family or comparable social units.

Hospital means a public or other nonprofit hospital which is accredited by the Joint Commission on Accreditation of Hospitals or the American Osteopathic Association.

Nonprofit refers to the status of an entity which is a corporation or association, or is owned and operated by one or more corporations or associations, no part of the net earnings of which inures, or may lawfully inure, to the benefit of any private shareholder or individual.

Osteopathic internship program means an internship which emphasizes family medicine and is approved by the American Osteopathic Association.

Preceptorship means an educational experience in which the trainee works individually with a designated physician, the preceptor, who teaches and personally supervises clinical activity.

Predoctoral training program means an educational program in family medicine, including courses, clerkships or preceptorships in family medicine, which is part of a course of study leading to the degree of doctor of medicine or osteopathic medicine, and student assistantships in family medicine.

Residency training program means:

(a) A residency program in family practice which is fully or provisionally accredited by the Accreditation Council for Graduate Medical Education; or

(b) A postdoctoral program in osteopathic general practice which emphasizes family medicine and is approved by the American Osteopathic Association.

School of medicine or osteopathic medicine means a public or private nonprofit school in a State which provides training leading, respectively, to a degree of doctor of medicine or to a degree of doctor of osteopathic medicine and which is accredited as provided in section 799(1)(E) of the Act.

Secretary means the Secretary of Health and Human Services and any other officer or employer of the Department of Health and Human Services to whom the authority involved has been delegated.

State means, in addition to the several States, the District of Columbia, the Commonwealth of Puerto Rico, the Commonwealth of the Northern Mariana Islands, the Virgin Islands, Guam, American Samoa, the Republic of Palau, the Republic of the Marshall Islands, and the Federated States of Micronesia.

Student assistantship means a research program in family medicine for

predoctoral medical (M.D. or D.O.) students.

Trainee means a medical (M.D. or D.O.) student, intern, resident, or physician participating in a training program supported by a grant under these regulations.

[45 FR 68895, Oct. 16, 1980, as amended at 49 FR 11613, Mar. 26, 1984; 57 FR 45738, Oct. 5, 1992; 61 FR 6125, Feb. 16, 1996]

§ 57.1603 Who is eligible to apply for a grant?

(a) For predoctoral training programs, an applicant must be a school of medicine or osteopathic medicine located in a State.

(b) For graduate and faculty development training programs, an applicant must be located in a State and be a school of medicine or osteopathic medicine, a hospital, or a public or private nonprofit entity which provides either health or educational programs as one of its major functions.

(c) Each eligible applicant desiring a grant under this subpart shall submit an application in the form and at such time as the Secretary may prescribe.

[45 FR 68895, Oct. 16, 1980, as amended at 57 FR 45738, Oct. 5, 1992]

§ 57.1604 What requirements must a project meet?

(a) *General requirements.* A project supported under this subpart must meet the following requirements:

(1) Each project must have a project director who works at the grantee institution or training site institution, has relevant training and experience, and has been approved by the Secretary to direct the project.

(2) Each project must have an appropriate administrative and organizational plan and appropriate faculty, staff, and facility resources for the achievement of stated objectives.

(3) Each project must systematically evaluate the educational program including trainees and faculty preceptors, the administration of the program and the degree to which program and educational objectives are met.

(4) Each project, other than a faculty development project, must use ambulatory care settings where family medicine is practiced and in which an adequate portion of the clinical training is conducted.

(5) Each project, other than a faculty development project, must have a family medicine curriculum which:

(i) Is appropriate for the academic level of the trainees and the specific length and nature of the educational program;

(ii) Supplements any practical (including clinical) experiences with related education activities; and

(iii) Emphasizes subjects pertinent to:

(A) Ambulatory care;

(B) Psychosocial skills and topics; and

(C) Related nonclinical areas relevant to the practitioner of family medicine.

(b) *Additional requirements for predoctoral training programs.* In addition to the requirements of paragraph (a) of this section, projects for predoctoral training programs must also meet the following additional requirements:

(1) The training program must be sponsored and supervised by an appropriate administrative unit in family medicine, the faculty of which participates in the preparation of the preclerkship curriculum and required courses and activities, for which faculty may be interdisciplinary, such as physical diagnosis and clinical pathological conferences, and which coordinates the predoctoral offering of clerkships and other clinical experiences oriented to family medicine.

(2) Each training program must be part of an integrated institutional strategy to provide education and training in family medicine designed to encourage an appropriate percentage of its graduates, annually, to seek graduate training in family medicine and eventually to enter a career in family medicine.

(3) For projects which include preceptorships in family medicine:

(i) The project must provide medical (M.D. or D.O.) students with ambulatory care training in a community setting.

(ii) Preceptors must have practices which are consistent with the principles of family medicine and must be

selected by the administrative unit in family medicine.

(iii) Stipend support from grant funds may be given to trainees who are not receiving academic credit for the preceptorship only if they (A) need it; (B) indicate an interest in working in the field of family medicine; and (C) engage in the preceptorship full time for at least 4 consecutive weeks. Stipend support from grant funds may be given to trainees who are receiving academic credit for the preceptorship only when the three conditions above are met and, additionally, when the trainee incurs extraordinary living expenses due to participation in the preceptorship.

(4) For projects for student assistantships:

(i) A family medicine faculty member of the administrative unit, identified under paragraph (b)(1) of this section, must supervise each student assistant.

(ii) The grantee must give preference in admission to the training program to applicants considering a career in academic family medicine.

(iii) Stipend support from grant funds may be given to trainees who are not receiving academic credit for the assistantship only if they (A) need it; (B) indicate an interest in working in the field of family medicine; and (C) engage in the assistantship full time for at least 8 consecutive weeks. Stipend support from grant funds may be given to trainees who are receiving academic credit for the assistantship only when the three conditions above are met and, additionally, when the trainees incurs extraordinary living expenses, due to participation in the assistantship.

(c) *Additional requirements for graduate training projects (except faculty development).* In addition to the requirements of paragraph (a) of this section, projects for approved or accredited residency training programs must meet the following additional requirements:

(1) Each program must have a supervisor of training with appropriate experience and training who is responsible for coordination and supervision of training in the program.

(2) Each program must use an appropriate resident or intern recruitment and selection process which assures that residents and interns in the program have applied specifically for training in the approved graduate training program.

(3) Each program must provide education for a sufficient number of interns or residents to provide an adequate collegial environment for the educational program and to enhance cost efficiency.

(4) Each program must have an adequate number of qualified faculty with training and experience in family medicine, behavioral sciences, and liaison specialties, for the number of interns or resident in the program. The faculty of the program must engage in periodic educational activities to improve their teaching skills.

(5) Each program must provide an appropriate amount of clinical training for each intern or resident in ambulatory care settings emphasizing family medicine in each year of the training program. This training will be for the purpose of assuring an adequate education in the principles of the practice of family medicine throughout the program. In addition, each training program must provide clinical training in other ambulatory care settings relevant to family medicine, such as emergency units.

(6) Each program must have adequate facilities for the provision of the educational activities and, in particular, have family medicine ambulatory care space sufficient to provide an adequate clinical experience for the interns or residents.

(7) Each intern or resident must serve a sufficient number of families and individual patients with a variety of health care needs to provide the trainee with a broad clinical experience.

(d) *Additional requirements for faculty development programs.* (1) Each project must have a curriculum which:

(i) Directly applies to family medicine training programs;

(ii) Emphasizes improvement of pedagogical skills for clinical and classroom settings; and

(iii) Uses didactic and nondidactic teaching strategies.

(2) Only physicians who teach or intend to teach in family medicine are eligible to participate as trainees in the program.

(3) Each program must have a sufficient number of trainees participating during the conduct of any educational activities to provide a collegial environment and to make the program cost efficient.

(4) Stipend support from grant funds may be no longer than 24 cumulative months for any trainee.

(5) To be eligible for financial assistance from grant funds, a trainee must:

(i) Intend to teach in family medicine training program on a full-time basis; and

(ii) Be a full-time participant in the training program for at least 3 months.

[45 FR 68895, Oct. 16, 1980, as amended at 49 FR 11613, Mar. 26, 1984; 54 FR 50374, Dec. 6, 1989; 57 FR 45738, Oct. 5, 1992]

§ 57.1605 How will applications be evaluated?

(a) As required by section 798(a) of the Act, each application for a grant under this subpart shall be submitted to a peer review group, composed principally of non-Federal experts, for an evaluation of the merits of the proposals made in the application. The Secretary may not approve such an application unless a peer review group has recommended the application for approval. The Secretary will approve projects which best promote the purposes of section 747 of the Act and these regulations. The Secretary will consider, among other factors:

(1) The degree to which the proposed project provides for the project requirements in § 57.1604;

(2) The administrative and management ability of the applicant to carry out the proposed project in a cost-effective manner; and

(3) The potential of the project to continue on a self-sustaining basis.

(b) In determining the funding of projects approved under paragraph (a) of this section, the Secretary will consider any special factors relating to national needs as the Secretary may from time to time announce in the FEDERAL REGISTER.

[45 FR 68895, Oct. 16, 1980, as amended at 49 FR 11613, Mar. 26, 1984; 53 FR 14792, Apr. 26, 1988; 61 FR 6125, Feb. 16, 1996]

§ 57.1606 How long does grant support last?

(a) The notice of grant award specifies the length of time the Secretary intends to support the project without requiring the project to recompete for funds. This period, called the project period, will not exceed 5 years.

(b) Generally, the grant will initially be funded for 1 year, and subsequent continuation awards will also be for 1 year at a time. Decisions regarding continuation awards and the funding levels of these awards will be made after consideration of such factors as the grantee's progress and management practices, and the availability of funds. In all cases, continuation awards require a determination by the Secretary that continued funding is in the best interest of the Federal Government.

(c) Neither the approval of any application nor the award of any grant shall commit or obligate the United States in any way to make any additional, supplemental, continuation or other award with respect to any approved application or portion of an approved application. For continuation support, grantees must make separate application at such times and in such a form as the Secretary may prescribe.

[45 FR 68895, Oct. 16, 1980, as amended at 57 FR 45739, Oct. 5, 1992]

§ 57.1607 For what purposes may grant funds be spent?

(a) A grantee shall only spend funds it receives under this subpart according to the approved application and budget, the authorizing legislation, terms and conditions of the grant award, applicable cost principles specified in subpart Q of 45 CFR part 74, and these regulations.

(b) Grantees may not spend grant funds for sectarian instruction or for any religious purpose.

(c) Any balance of federally obligated grant funds remaining unobligated by the grantee at the end of a budget period may be carried forward provided specific approval is granted by the Secretary. If at any time during a budget period it becomes apparent to the Secretary that the amount of Federal funds awarded and available to the grantee for that period, including any

unobligated balance carried forward from prior periods, exceeds the grantee's needs for the period, the Secretary may adjust the amounts awarded by withdrawing the excess. A budget period is an interval of time (usually 12 months) into which the project period is divided for funding and reporting purposes.

[45 FR 68895, Oct. 16, 1980, as amended at 57 FR 45739, Oct. 5, 1992]

§ 57.1608 What additional Department regulations apply to grantees?

Several other regulations apply to these grants. They include, but are not limited to:

42 CFR part 50, subpart D—Public Health Service grant appeals procedure
45 CFR part 16—Procedures of the Departmental Grant Appeals Board
45 CFR part 46—Protection of human subjects
45 CFR part 74—Administration of grants
45 CFR part 75—Informal grant appeals procedures
45 CFR part 76—Governmentwide Debarment and Suspension (nonprocurement) and Governmentwide Requirements for Drug-Free Workplace (Grants)
45 CFR part 80—Nondiscrimination under programs receiving Federal assistance through the Department of Health and Human Services effectuation of title VI of the Civil Rights Act of 1964
45 CFR part 81—Practice and procedure for hearings under part 80 of this title
45 CFR part 83—Regulation for the administration and enforcement of Sections 794 and 855 of the Public Health Service Act
45 CFR part 84—Nondiscrimination on the basis of handicap in programs and activities receiving or benefiting from Federal financial assistance
45 CFR part 86—Nondiscrimination on the basis of sex in education programs and activities receiving or benefiting from Federal financial assistance
45 CFR part 91—Nondiscrimination on the basis of age in HHS programs or activities receiving Federal financial assistance
45 CFR part 93—New restrictions on lobbying.

[49 FR 38113, Sept. 27, 1984; 49 FR 40406, Oct. 16, 1984, as amended at 57 FR 45739, Oct. 5, 1992; 61 FR 6125, Feb. 16, 1996]

§ 57.1609 What other audit and inspection requirements apply to grantees?

Each entity which receives a grant under this subpart must meet the requirements of 45 CFR part 74 concerning audit and inspection.

[61 FR 6125, Feb. 16, 1996; 61 FR 51020, Sept. 30, 1996]

§ 57.1610 Additional conditions.

The Secretary may impose additional conditions on any grant award before or at the time of an award if he or she determines that these conditions are necessary to assure or protect the advancement of the approved activity, the interest of the public health, or the conservation of grant funds.

[45 FR 68895, Oct. 16, 1980. Redesignated at 49 FR 11613, Mar. 26, 1984]

Subpart R—Grants for the Establishment of Departments of Family Medicine

AUTHORITY: Sec. 215, Public Health Service Act, 58 Stat. 690, as amended by 63 Stat. 35 (42 U.S.C. 216); sec. 780, Public Health Service Act, 90 Stat. 2311, as amended by 95 Stat. 221 and 102 Stat. 3146 (42 U.S.C. 295g); renumbered as sec. 747, as amended by Pub. L. 102–408, 106 Stat. 2042–2043 (42 U.S.C. 293k).

§ 57.1701 To what programs do these regulations apply?

These regulations apply to the award of grants under section 747 of the Public Health Service Act (42 U.S.C. 293k) to schools of medicine and osteopathic medicine to meet the costs of projects to establish, maintain, or improve academic administrative units to provide clinical instruction in family medicine. These projects may include:

(a) The planning and development of model predoctoral, faculty development, and graduate medical education programs; and

(b) Academic and clinical activities relevant to the field of family medicine.

[48 FR 20215, May 4, 1983, as amended at 57 FR 45739, Oct. 5, 1992; 60 FR 28067, May 30, 1995]

§ 57.1702 Definitions.

Academic administrative unit or *unit* means a department, division, or other formal academic unit of a school of medicine or osteopathic medicine or clinical campuses of such schools that

provides clinical instruction in family medicine.

Act means the Public Health Service Act, as amended.

Clinical campus means a geographically separate educational entity of an accredited medical school that is recognized and identified as a clinical campus by the American Academy of Family Physicians and that has been given the responsibility to coordinate or provide all clinical training for that clinical campus.

Family medicine includes ''osteopathic general practice'' and means the field of medicine in which the physician:

(a) Serves as a physician of first contact with families and patients of all ages and provides a means of entry into the health care system;

(b) Evaluates the patient's total health needs, provides personal medical care within one or more fields of medicine, and refers the patient, when indicated, to appropriate sources of care while preserving the continuity of care;

(c) Assumes responsibility with the patient for comprehensive and continuous health care and acts as a leader or coordinator of others providing health services; and

(d) Considers the patient's total health care within the context of his or her environment, including the community and the family or comparable social units.

Nonprofit refers to the status of an entity which is a corporation or association, or is owned and operated by one or more corporations or associations, no part of the net earnings of which inures, or may lawfully inure, to the benefit of any private shareholder or individual.

Other major clinical units means formal academic units at the applicant school or its clinical campus that offer clinical instruction in internal medicine, obstetrics and gynecology, pediatrics, psychiatry, or surgery.

Residency training program means a 3-year residency program in family practice that is fully or provisionally accredited by the Accreditation Council for Graduate Medical Education, or the equivalent of such a program as determined by the Secretary. In the case of osteopathic medicine, a postgraduate program of no less than 2 years' duration, including the osteopathic internship, as approved or provisionally approved by the American Osteopathic Association will be deemed such an equivalent.

School of medicine or *osteopathic medicine* means a public or private nonprofit school in a State which provides training leading, respectively, to a degree of doctor of medicine or to a degree of doctor of osteopathic medicine and which is accredited as provided in section 799(1)(E) of the Act.

Secretary means the Secretary of Health and Human Services and any other officer or employee of the Department of Health and Human Services to whom the authority involved has been delegated.

State means, in addition to the several States, the District of Columbia, the Commonwealth of Puerto Rico, the Commonwealth of the Northern Mariana Islands, the Virgin Islands, Guam, American Samoa, the Republic of Palau, the Republic of the Marshall Islands, and the Federated States of Micronesia.

[48 FR 20215, May 4, 1983, as amended at 57 FR 45739, Oct. 5, 1992; 60 FR 28067, May 30, 1995; 61 FR 6125, Feb. 16, 1996]

§ 57.1703 Who is eligible to apply for a grant?

Any school of medicine or osteopathic medicine which is located in a State is eligible to apply for a grant. Each eligible applicant desiring a grant under this subpart shall submit an application in the form and at such time as the Secretary may prescribe.

[57 FR 45739, Oct. 5, 1992]

§ 57.1704 Program requirements.

Existing units supported under this subpart must meet all the requirements of this section no later than 12 months after initial award of the grant. Units which are being established with the aid of grants under this subpart must meet the requirement of paragraph (a) of this section no later than 12 months after initial award, and the remaining requirements of this section no later than 24 months after initial award of the grant. However, within the first 12 months of grant support,

units which are being established must submit a continuation application. This application is expected to include a plan which details, in a format determined by the applicant, how the remaining project requirements will be met by the end of the second year of grant support. In addition to units that are initially establishing under this subpart, those that change organizational status (i.e., from division to department) are also considered establishing units for the purpose of this subpart. Those that maintain organizational status are considered existing units.

(a) Each project must have a project director, who works at the grantee institution in an administrative unit of the grantee institution on an appointment consistent with other major departments, heads or will head the unit, and has relevant training and experience in family medicine.

(b) The unit must have academic status comparable to that of one of the other major clinical units at the institution.

(c) The unit must have administrative autonomy comparable to that of other academic units.

(d) The unit must have control over a residency training program. The program must have the capacity to enroll a total of at least 9 interns or residents annually. A unit whose applicant school or clinical campus does not have a residency program accredited under its direct authority will be considered as meeting this requirement if it has a written affiliation agreement with a hospital which conducts a residency program as described.

(e) The unit (or units in the case of schools with one or more decentralized units) must have responsibility for providing instruction to each member of the student body who is engaged in an education program leading to a degree in doctor of medicine or doctor of osteopathic medicine. The amount of mandatory and elective curriculum must be comparable to the amount of mandatory and elective curriculum time required for other major clinical units at the school.

(f) The unit must have, in the judgment of the Secretary, a sufficient number of full-time faculty to conduct the instruction. The number of family medicine faculty in the unit must be comparable to that of full-time faculty responsible for conducting the instruction of one of the other major clinical units either at the school or at the clinical campus, whichever is the same as the unit receiving the grant funds.

(g) Each project must evaluate the program of instruction required in paragraph (f) of this section, including evaluation of faculty competence, the administration of the program, and the degree to which program objectives are met.

(h) Where projects include the planning and development of model predoctoral, faculty development, or graduate medical education programs, those programs must be designed to eventually meet the requirements of the regulations implementing section 747 of the Act, 42 CFR part 57, subpart Q.

(Approved by the Office of Management and Budget under control number 0915—0060)

[48 FR 20215, May 4, 1983, as amended at 57 FR 45739, Oct. 5, 1992; 60 FR 28067, May 30, 1995]

§ 57.1705 How will applications be evaluated?

As required by section 798(a) of the Act, each application for a grant under this subpart shall be submitted to a peer review group, composed principally of non-Federal experts, for an evaluation of the merits of the proposals made in the application. The Secretary may not approve such an application unless a peer review group has recommended the application for approval. The Secretary will award grants to applicants whose projects will best promote the purposes of section 747 of the Act and this subpart. The Secretary will consider, among other factors:

(a) The degree to which the proposed project adequately provides for the project requirements in § 57.1704;

(b) The administrative and management capability of the applicant to carry out the proposed project in a cost-effective manner;

(c) The qualifications of the proposed staff and faculty of the unit; and

(d) The potential of the project to continue on a self-sustaining basis.

[48 FR 20215, May 4, 1983, as amended at 60 FR 28067, May 30, 1995]

§ 57.1706 How long does grant support last?

(a) The notice of grant award specifies how long the Secretary intends to support the project without requiring the project to recompete for funds. This period, called the project period, will not exceed 5 years.

(b) Generally, the grant will initially be funded for 1 year and subsequent noncompeting continuation awards will also be for 1 year at a time. Decisions regarding noncompeting continuation awards and the funding levels of these awards will be made after consideration of such factors as the grantee's progress and management practices, and the availability of funds. In all cases, noncompeting continuation awards require a determination by the Secretary that continued funding is in the best interest of the Federal Government.

(c) Neither the approval of any application, nor the award of any grant, shall commit or obligate the United States in any way to make any additional, supplemental, noncompeting continuation or other award with respect to any approved application or portion of an approved application. For continuation support, grantees must make separate application at such times and in such a form as the Secretary may prescribe.

[48 FR 20215, May 4, 1983, as amended at 57 FR 45739, Oct. 5, 1992]

§ 57.1707 For what purposes may grant funds be spent?

(a) A grantee shall only spend funds it receives under this subpart according to the approved application and budget, the authorizing legislation, the terms and conditions of the grant award, and the applicable cost principles in subpart Q of 45 CFR part 74, and these regulations.

(b) Grantees may not spend grant funds for sectarian instruction or for any religious purpose.

(c) Any balance of federally obligated grant funds remaining unobligated by the grantee at the end of a budget period may be carried forward provided specific approval is granted by the Secretary. If at any time during a budget period it becomes apparent to the Secretary that the amount of Federal funds awarded and available to the grantee for that period, including any unobligated balance carried forward from prior periods, exceeds the grantee's needs for the period, the Secretary may adjust the amount awarded by withdrawing the excess. A budget period is an interval of time (usually 12 months) into which the project period is divided for funding and reporting purposes.

[48 FR 20215, May 4, 1983, as amended at 57 FR 45740, Oct. 5, 1992]

§ 57.1708 What additional Department regulations apply to grantees?

Several other regulations apply to grants under the subpart. These include, but are not limited to:

42 CFR part 50, subpart D—Public Health Service grant appeals procedure

45 CFR part 16—Procedures of the Departmental Grant Appeals Board

45 CFR part 46—Protection of human subjects

45 CFR part 74—Administration of grants

45 CFR part 75—Informal grant appeals procedures

45 CFR part 76—Governmentwide Debarment and Suspension (nonprocurement) and Governmentwide Requirements for Drug-Free Workplace (Grants)

45 CFR part 80—Nondiscrimination under programs receiving Federal assistance through the Department of Health and Human Services effectuation of title VI of the Civil Rights Act of 1964

45 CFR part 81—Practice and procedure for hearings under part 80 of this title

45 CFR part 83—Regulation for the administration and enforcement of sections 794 and 855 of the Public Health Service Act

45 CFR part 84—Nondiscrimination on the basis of handicap in programs and activities receiving or benefiting from Federal financial assistance

45 CFR part 86—Nondiscrimination on the basis of sex in education programs and activities receiving or benefiting from Federal financial assistance

45 CFR part 91—Nondiscrimination on the basis of age in HHS Programs or activities receiving Federal financial assistance

45 CFR part 93—New restrictions on lobbying.

[49 FR 38114, Sept. 27, 1984, as amended at 57 FR 45740, Oct. 5, 1992; 61 FR 6125, Feb. 16, 1996]

§ 57.1709 What other audit and inspection requirements apply to grantees?

Each entity which receives a grant under this subpart must meet the requirements of 45 CFR part 74 concerning audit and inspection.

[60 FR 38970, July 31, 1995]

§ 57.1710 Additional conditions.

The Secretary may impose additional conditions on any grant award before or at the time of an award if he or she determines that these conditions are necessary to assure or protect the advancement of the approved activity, the interest of the public health, or the conservation of grant funds.

[48 FR 20215, May 4, 1983]

Subpart S—Educational Assistance to Individuals from Disadvantaged Backgrounds

AUTHORITY: Sec. 215 of the Public Health Service Act, 58 Stat. 690, as amended by 63 Stat. 35 (42 U.S.C. 216); sec. 787 of the Public Health Service Act, 90 Stat. 2317, as amended by 95 Stat. 923, 99 Stat. 541, and 102 Stat. 3131–3132 (42 U.S.C. 295g–7); renumbered as sec. 740, as amended by Pub. L. 102–408, 106 Stat. 2032–2033 (42 U.S.C. 293d).

§ 57.1801 To what grant program do these regulations apply?

These regulations apply to grants to eligible schools and entities under section 740 of the Public Health Service Act (42 U.S.C. 293d) to assist individuals from disadvantaged backgrounds to enter and graduate from health professions schools and schools of allied health.

[47 FR 54438, Dec. 3, 1982, as amended at 61 FR 6125, Feb. 16, 1996]

§ 57.1802 Definitions.

Act means the Public Health Service Act, as amended.

Allied health professions means professions which support, complement, or supplement the professional functions of physicians, dentists, and other health professionals in the delivery of health care to patients, or assist environmental engineers and other personnel in environmental health control and preventive medicine activities.

Community-based program means a program whose organizational headquarters is located in and which primarily serves: A Metropolitan Statistical Area, as designated by the Office of Management and Budget; a Bureau of Economic Analysis, U.S. Department of Commerce designated nonmetropolitan economic area; a county; or Indian tribe(s) as defined in 42 CFR 36.102(c), i.e., an Indian tribe, band, nation, rancheria, Pueblo, colony or community, including an Alaska Native Village or regional or village corporation.

Health professions means the professions of medicine, dentistry, osteopathic medicine, pharmacy, optometry, podiatric medicine, veterinary medicine, public health, chiropractic, health administration, and clinical psychology.

Health professions schools means schools of medicine, dentistry, osteopathic medicine, pharmacy, optometry, podiatric medicine, veterinary medicine, public health, chiropractic, graduate programs in health administration, or graduate programs in clinical psychology, as defined in section 799(1)(A), (B), (C), and (D) of the Act and as accredited in section 799(1)(E) of the Act.

National of the United States (as defined in 8 U.S.C. 1101(a)(22), the Immigration and Nationality Act) means a citizen of the United States or a person who, though not a citizen of the United States, owes permanent allegiance to the United States.

Nonprofit refers to the status of an entity which is a corporation or association, or is owned and operated by one or more corporations or associations no part of the net earnings of which inures, or may lawfully inure, to the benefit of any private shareholder or individual.

School of allied health means a public or private nonprofit college, junior college, university or hospital-based educational entity which provides or is accredited to provide a degree program in

an allied health discipline and which meets all the criteria in section 799(4) of the Act.

Secretary means the Secretary of Health and Human Services and any other officer or employee of the Department of Health and Human Services to whom the authority involved has been delegated.

State means, in addition to the several States, the District of Columbia, the Commonwealth of Puerto Rico, the Commonwealth of the Northern Mariana Islands, the Virgin Islands, Guam, American Samoa, the Republic of Palau, the Republic of the Marshall Islands and the Federated States of Micronesia.

[45 FR 73052, Nov. 4, 1980, as amended at 47 FR 54438, Dec. 3, 1982; 56 FR 40564, Aug. 15, 1991; 57 FR 45740, Oct. 5, 1992; 61 FR 6125, Feb. 16, 1996]

§ 57.1803 Who is eligible to apply for a grant?

(a) Health professions schools, schools of allied health, and public or private nonprofit health or educational entities which are located in a State and provide health or educational programs as one of their major functions may apply for a grant under this subpart. Each eligible applicant desiring a grant under this subpart shall submit an application in the form and at such time as the Secretary may prescribe.

(b) Applicants which offer degree programs in the allied health professions must meet relevant standards and guidelines established by appropriate:

(1) Accrediting bodies recognized by the Secretary of Education, or

(2) Federal or State agencies.

[45 FR 73052, Nov. 4, 1980, as amended at 56 FR 40565, Aug. 15, 1991; 57 FR 45740, Oct. 5, 1992]

§ 57.1804 Who is eligible for educational assistance?

To be eligible for educational assistance under this program, an individual must:

(a) Be a resident of the United States and either a citizen or national of the United States, an alien lawfully admitted for permanent residence in the United States, a citizen of the Commonwealth of the Northern Mariana Islands, a citizen of the Republic of Palau, a citizen of the Republic of the Marshall Islands, or a citizen of the Federated States of Micronesia;

(b) Have completed at least the junior year of high school (or its equivalent), except in the case of Model Demonstration programs; and

(c) Come from a disadvantaged background. For this program, an individual from a disadvantaged background is one who:

(1) Comes from an environment that has inhibited the individual from obtaining the knowledge, skill, and abilities required to enroll in and graduate from a health professions school, or from a program providing education or training in an allied health profession; or

(2) Comes from a family with an annual income below a level based on low income thresholds according to family size published by the U.S. Bureau of the Census, adjusted annually for changes in the Consumer Price Index, and adjusted by the Secretary for use in all health professions programs. The Secretary will periodically publish these income levels in the FEDERAL REGISTER.

[45 FR 73052, Nov. 4, 1980, as amended at 47 FR 54438, Dec. 3, 1982; 56 FR 40565, Aug. 15, 1991; 61 FR 6126, Feb. 16, 1996]

§ 57.1805 Program requirements.

(a) The Secretary will award grants to meet the cost of carrying out one or more of the following five purposes:

(1) To identify individuals from disadvantaged backgrounds for education in the health or allied health professions through the development and application of criteria for this purpose, and to recruit these individuals through motivational activities which may involve dissemination of information, exposure to role models and health facilities, and counseling.

(2) To provide individuals from disadvantaged backgrounds, for a period prior to their entry into a regular course of education of such a school, preliminary education designed to assist them to complete successfully such regular course of education in a health professions school or school of allied health, or to refer them to institutions

which provide it. Preliminary education in this context is education designed to expand the academic ability of disadvantaged students during their preprofessional training. It may not include classes already taught as part of the regular course of education leading to a high school diploma or undergraduate degree. It may not be offered to students before they complete the junior year of high school.

(3) To provide information to individuals from disadvantaged backgrounds about financial aid available to students in health professions schools, or schools of allied health, or schools and entities which provide training necessary to qualify for enrollment in health professions schools or schools of allied health.

(4) To facilitate the entry of individuals from disadvantaged backgrounds into health professions schools or schools of allied health by engaging in activities which assist them to compete for admission, such as instruction designed to improve their performance on admission tests, and by assisting admission committees with the evaluation of disadvantaged applicants.

(5) To provide counseling or other retention services, such as tutorial assistance and assistance in adjusting to the environment of the school, which are designed to help individuals from disadvantaged backgrounds who are enrolled in health professions schools or schools of allied health to complete this education.

(b) The grantee must carry out at least two of the five purposes, even if grant funds are requested or awarded for only one of them.

(c) The grantee must evaluate its program based on the plan provided in the grant application.

(d) Grantees which: (1) Are schools of medicine, osteopathic medicine, public health, dentistry, veterinary medicine, optometry, pharmacy, allied health, chiropractic, podiatric medicine, and public and private nonprofit schools that offer graduate programs in clinical psychology; and

(2) Have a proportionate enrollment of individuals from disadvantaged backgrounds that is less than 200 percent of the national average percentage of such individuals in all schools of each health professions discipline must assure the Secretary that during a period of 3 years, commencing on the date of the award of the grant, they will increase their first-year enrollment of individuals from disadvantaged backgrounds by at least 20 percent over enrollments in the base year of 1987.

[45 FR 73052, Nov. 4, 1980, as amended at 56 FR 40565, Aug. 15, 1991; 56 FR 43648, Sept. 3, 1991; 57 FR 45740, Oct. 5, 1992]

§ 57.1806 How will applications be evaluated?

(a) As required by section 798(a) of the Act, each application for a grant under this subpart shall be submitted to a peer review group, composed principally of non-Federal experts, for an evaluation of the merits of the proposals made in the application. The Secretary may not approve such an application unless a peer review group has recommended the application for approval. The Secretary will decide which applications to approve by considering, among other factors:

(1) The degree to which the proposed project adequately provides for the requirements in § 57.1805;

(2) The number and types of individuals who can be expected to benefit from the project;

(3) The administrative and management ability of the applicant to carry out the proposed project in a cost-effective manner;

(4) The adequacy of the staff and faculty;

(5) The soundness of the budget; and

(6) The potential of the project to continue without further support under this program.

(b) Within the limits of funds available, the Secretary will award grants to approved applicants with projects that will best promote the purposes of section 740 of the Act. Of the amounts appropriated under this section for any fiscal year, 10 percent shall be obligated for community-based programs and 70 percent shall be obligated for grants to institutions of higher education and not more than 5 percent of such funds may be obligated for grants having the primary purpose of informing individuals about the existence and

general nature of health careers. Section 740(a)(2)(G) authorizes the payment of such stipends as the Secretary may approve for participants in a project for any period of education at any school eligible for a grant under this subpart.

(c) *Funding priority*. (1) In determining the funding of applications approved under paragraph (a) of this section, the Secretary shall give priority to schools described in § 57.1805(d), beginning in fiscal year 1992—

(i) Which previously received a grant under this subpart and increased its first-year enrollment of individuals from disadvantaged backgrounds by at least 20 percent over that enrollment in the base year 1987 by the end of 3 years from the date of the award of the HCOP grant; and

(ii) Which had not previously received a grant under this subpart that increased its first-year enrollment of individuals from disadvantaged backgrounds by at least 20 percent over that enrollment in the base year 1987, over any period of time.

(2) In addition, should specific needs warrant, the Secretary will also consider other special factors relating to national needs as the Secretary may from time to time announce in the FEDERAL REGISTER.

[45 FR 73052, Nov. 4, 1980, as amended at 56 FR 40565, Aug. 15, 1991; 56 FR 43648, Sept. 3, 1991; 61 FR 6126, Feb. 16, 1996]

§ 57.1807 How long does grant support last?

(a) The notice of grant award specifies the length of time the Secretary intends to support the project without requiring the project to recompete for funds. This period, called the project period, will not exceed 3 years.

(b) Generally, the grant will initially be funded for 1 year, and subsequent continuation awards will also be funded for 1 year at a time. Decisions regarding continuation awards and the funding levels of these awards will be made after consideration of factors such as the grantee's progress and management practices, and the availability of funds. In all cases, continuation awards require a determination by the Secretary that continued funding is in the best interest of the Federal Government.

(c) Neither the approval of any application nor the award of any grant shall commit or obligate the United States in any way to make any additional, supplemental, continuation or other award with respect to any approved application or portion of an approved application. For continuation support, grantees must make separate application at such times and in such a form as the Secretary may prescribe.

[45 FR 73052, Nov. 4, 1980, as amended at 56 FR 40565, Aug. 15, 1991; 57 FR 45740, Oct. 5, 1992]

§ 57.1808 For what purposes may grant funds be spent?

(a) A grantee shall only spend funds it receives under this subpart according to the approved application and budget, the authorizing legislation, terms and conditions of the grant award, applicable cost principles specified in subpart Q of 45 CFR part 74, and these regulations.

(b) Any balance of federally-obligated grant funds remaining unobligated by the grantee at the end of a budget period may be carried forward provided specific approval is granted by the Secretary. If at any time during the budget period it becomes apparent to the Secretary that the amount of Federal funds provided and made available to the grantee for that period, including any unobligated balance carried forward from prior periods, exceeds the grantee's needs for the period, the Secretary may adjust the amounts provided by withdrawing the excess. A budget period is an interval of time (usually 12 months) into which the project period is divided for funding and reporting purposes.

(c) The grantee may spend grant funds to provide one round trip for each individual in the program between his or her residence and the training site if:

(1) The training site is beyond a reasonable commuting distance and requires the individual to establish a temporary new residence; and

(2) The educational assistance is not offered at a time when the individual would be at the training site as a student in a regular course of education

leading to a high school diploma, associate degree, undergraduate degree, or degree in the health or allied health professions.

(d) The grantee may spend grant funds to pay individuals in the program a stipend when the grantee determines that:

(1) The condition in paragraph (c)(2) of this section exists;

(2) No other Federal financial assistance program is authorized to provide this support; and

(3) The individual needs this support to participate in the program.

(e) The grantee may not spend grant funds to pay tuition or fees, train program staff, retrain health professionals, or for sectarian instruction, or for any religious purpose.

[45 FR 73052, Nov. 4, 1980, as amended at 56 FR 40566, Aug. 15, 1991]

§ 57.1809 What additional Department regulations apply to grantees?

Several other Department regulations apply to grantees. They include but are not limited to:

42 CFR part 50, subpart D—Public Health Service grant appeals procedure
45 CFR part 16—Procedures of the Departmental Grant Appeals Board
45 CFR part 46—Protection of human subjects
45 CFR part 74—Administration of grants
45 CFR part 75—Informal grant appeals procedures
45 CFR part 76—Governmentwide debarment and suspension (non-procurement) and governmentwide requirements for drug-free workplace (grants)
45 CFR part 80—Nondiscrimination under programs receiving Federal assistance through the Department of Health and Human Services effectuation of title VI of the Civil Rights Act of 1964
45 CFR part 81—Practice and procedure for hearings under part 80 of this title
45 CFR part 83—Regulation for the administration and enforcement of sections 794 and 855 of the Public Health Service Act
45 CFR part 84—Nondiscrimination on the basis of handicap in programs and activities receiving or benefiting from Federal financial assistance
45 CFR part 86—Nondiscrimination on the basis of sex in education programs and activities receiving or benefiting from Federal financial assistance
45 CFR part 91—Nondiscrimination on the basis of age in HHS programs or activities receiving Federal financial assistance
45 CFR part 93—New restrictions on Lobbying

[49 FR 38114, Sept. 27, 1984, as amended at 56 FR 40566, Aug. 15, 1991; 57 FR 45740, Oct. 5, 1992; 61 FR 6126, Feb. 16, 1996]

§ 57.1810 What other audit and inspection requirements apply to grantees?

Each entity which receives a grant under this subpart must meet the requirements of 45 CFR part 74 concerning audit and inspection.

[61 FR 6126, Feb. 16, 1996; 61 FR 51020, Sept. 30, 1996]

§ 57.1811 Additional conditions.

The Secretary may impose additional conditions on any grant award before or at the time of any award if he or she determines that these conditions are necessary to assure or protect the advancement of the approved activity, the interest of the public health, or the conservation of grant funds.

[45 FR 73052, Nov. 4, 1980]

Subpart T [Reserved]

Subpart U—Armed Forces Health Professions Scholarship Program

AUTHORITY: Sec. 2(a), Pub. L. 92–426, 86 Stat. 719 (10 U.S.C. 2127(d)).

SOURCE: 38 FR 20447, Aug. 1, 1973, unless otherwise noted.

§ 57.2001 Applicability.

In the event the Secretary of Defense decides to enter into one or more contracts under 10 U.S.C. 2127(d), the regulations in this subpart outline considerations the Secretary of Defense will take into account in determining whether an accredited civilian educational institution has increased its total enrollment for the sole purpose of accepting members of the Armed Forces health professions scholarship program.

§ 57.2002 Definitions.

As used in this subpart:

(a) *Institution* means a college, university, or other institution or a department, division, or other administrative unit within a college, university, or other institution, which provides primarily or exclusively a course of study in medicine, dentistry, or other health profession, as determined under regulations prescribed by the Secretary of Defense, leading to a degree in one of said health professions, and which is accredited by an accrediting agency or association recognized by the United States Commissioner of Education.

(b) *Enrollment* in any fiscal year means the number of full-time students enrolled in an institution on October 15 of said year and pursuing a course of study which constitutes a full-time academic workload, as determined by the institution, leading to a degree in medicine, dentistry, or other health profession, as determined under regulations prescribed by the Secretary of Defense: *Provided,* That if the Secretary of Defense finds that a date other than October 15 would more accurately reflect an institution's enrollment in any fiscal year, the Secretary of Defense may use such other date in place of October 15 in making his determination under this subpart.

(c) *Fiscal year* means the Federal fiscal year beginning July 1 and ending on the following June 30.

(d) *Program* means the Armed Forces health professions scholarship program established under section 2(a) of the Uniformed Services Health Professions Revitalization Act of 1972 (86 Stat. 713, Pub. L. 92–426), and codified in chapter 105 of 10 U.S.C.

§ 57.2003 Determinations of increased enrollment solely for the program.

In the event the Secretary of Defense decides to enter into one or more contracts under 10 U.S.C. 2127(d), his determination as to whether an institution has increased its total enrollment in any fiscal year for the sole purpose of accepting members of the program will take into account the following considerations:

(a) A comparison of the total enrollment in said fiscal year with the total enrollments in immediately preceding fiscal years;

(b) Any increases in enrollment to which the institution has directly or indirectly committed itself in said fiscal year under: (1) Other Federal programs, such as those set forth in title VII and VIII of the Public Health Service Act (42 U.S.C. 292 *et seq.*), the Veterans' Administration Medical School Assistance and Health Manpower Training Act of 1972 (Pub. L. 92–541, 86 Stat. 1100 (38 U.S.C. 5070 *et seq.*)) and section 225 of the Public Health Service Act (sec. 5, Pub. L. 92–585, 86 Stat. 1293 (42 U.S.C. 234)); (2) programs of State or local governments or other public or private agencies, or (3) any legally binding arrangement: *Provided,* That insofar as a single increase may be applied to satisfy the commitments under two or more programs and/or other arrangements, said increase shall be considered to meet all such commitments;

(c) Any unusual factors, such as: (1) An institution having been newly established or (2) an institution experiencing what is for it an abnormal rate of attrition and/or admission.

Subpart V—Grants for Centers of Excellence

AUTHORITY: Sec. 788A of the Public Health Service Act, Pub. L. 100–97, 101 Stat. 713–714 (42 U.S.C. 295g–8a), and redesignated as section 782, as amended by Pub. L. 100–607, 102 Stat. 3136 (42 U.S.C. 295g–2); renumbered as sec. 739, as amended by Pub. L. 102–408, 106 Stat. 2027–2031 (42 U.S.C. 293c).

SOURCE: 54 FR 28067, July 5, 1989, unless otherwise noted.

§ 57.2101 To what projects do these regulations apply?

These regulations apply to grants awarded to public or nonprofit private health professions schools under section 739 of the Public Health Service Act (42 U.S.C. 293c) to assist such schools in supporting programs of excellence in health professions education for minority individuals.

[54 FR 28067, July 5, 1989, as amended at 61 FR 6126, Feb. 16, 1996]

§ 57.2102 Definitions.

Act means the Public Health Service Act, as amended.

Health professions school means any accredited school of medicine, dentistry, osteopathic medicine, pharmacy, optometry, podiatric medicine, veterinary medicine, public health, and chiropractic or graduate programs in health administration, or graduate programs in clinical psychology, as defined in section 799(1) (A), (B), (C), and (D) of the Act and as accredited in section 799(1)(E) of the Act.

Minority means an individual whose race/ethnicity is classified as American Indian or Alaskan Native, Asian or Pacific Islander, Black, or Hispanic.

Nonprofit refers to the status of an entity which is a corporation or association, or is owned and operated by one or more corporations or associations no part of the net earnings of which inures, or may lawfully inure, to the benefit of any private shareholder or individual.

Secretary means the Secretary of Health and Human Services and any other officer or employee of the Department of Health and Human Services to whom the authority involved has been delegated.

State means, in addition to the several States, the District of Columbia, the Commonwealth of Puerto Rico, the Commonwealth of the Northern Mariana Islands, the Virgin Islands, Guam, American Samoa, the Republic of Palau, the Republic of the Marshall Islands, and the Federated States of Micronesia.

[54 FR 28067, July 5, 1989, as amended at 57 FR 45740, Oct. 5, 1992; 61 FR 6126, Feb. 16, 1996]

§ 57.2103 Who is eligible to apply for a grant?

A health professions school described in section 799(1) (A), (B), (C), and (D) of the Act which has received support under section 788B (Advanced Financial Distress Assistance) of the Act for Fiscal Year 1987, may apply for a grant under this subpart. Each eligible applicant desiring a grant under this subpart shall submit an application in the form and at the time the Secretary may prescribe.

[54 FR 28067, July 5, 1989, as amended at 57 FR 45740, Oct. 5, 1992; 61 FR 6126, Feb. 16, 1996]

§ 57.2104 Project requirements.

(a) The Secretary will award grants to meet the cost of carrying out three or more of the following six purposes, one of which must be the purpose provided in paragraph (a)(1) of this section:

(1) Develop a plan to achieve institutional improvements, including financial independence, to enable such school to support programs of excellence in health professions education for minority individuals. This plan must be submitted within 6 months of the date of grant award;

(2) Improve the capacity of such school to recruit and retain faculty;

(3) Provide improved access to the library and information resources of such school;

(4) Establish, strengthen, or expand programs to enhance the academic performance of students in such school;

(5) Establish, strengthen, or expand programs to increase the number and quality of applicants for admission to such school. Activities designed to increase the number and quality of applicants to these schools may not be offered to students prior to the ninth grade; and

(6) Develop curricula and carry out faculty training programs in order to enable such school to become, for the Nation's health care providers, a resource with respect to the health problems of minority communities, such as higher infant mortality rates and higher incidences of acquired immunodeficiency syndrome.

(b) Each project must evaluate its program based on the evaluation plan provided in the grant application.

§ 57.2105 How will applications be evaluated?

(a) As required by section 798(a) of the Act, each application for a grant under this subpart shall be submitted to a peer review group, composed principally of non-Federal experts, for an evaluation of the merits of the proposals made in the application. The Secretary may not approve such an application unless a peer review group has recommended the application for approval. The Secretary will decide which applications to approve by considering, among other factors:

(1) The degree to which the applicant can arrange to continue the proposed project beyond the federally funded project period;

(2) The degree to which the proposed project meets three or more of the purposes as described in § 57.2104;

(3) The relationship of the objectives of the proposed project to the goals of the plan that will be developed pursuant to § 57.2104(a)(1);

(4) The administration and managerial ability of the applicant to carry out the project in a cost effective manner;

(5) The adequacy of the staff and faculty to carry out the program;

(6) The soundness of the budget for assuring effective utilization of grant funds, and the proportion of total program funds which come from non-federal sources and the degree to which they are projected to increase over the grant period;

(7) The number of individuals who can be expected to benefit from the project; and

(8) The overall impact the project will have on strengthening the school's capacity to train minority health professionals and increase the supply of minority health professionals available to serve minority populations in underserved areas.

(b) In determining the funding of applications approved under paragraph (a) of this section, the Secretary will consider any special factors relating to national needs as the Secretary may from time to time announce in the FEDERAL REGISTER.

[38 FR 20447, Aug. 1, 1973, as amended at 61 FR 6126, Feb. 16, 1996]

§ 57.2106 How long does grant support last?

(a) The notice of grant award specifies the length of time the Secretary intends to support the project without requiring the project to recompete for funds. This period, called the project period, will not exceed 3 years.

(b) Generally, the grant will initially be funded for 1 year, and subsequent continuation awards will also be for 1 year at a time. Decisions regarding the continuation awards and the funding levels of these awards will be made after consideration of such factors as the grantee's progress, including the degree that the projected portion of non-federal funds supporting the project has been met, and management practices, the existence of legislative authority, and the availability of funds. In all cases, continuation awards require a determination by the Secretary that continued funding is in the best interest of the Federal Government.

(c) Neither the approval of any application nor the award of any grant shall commit or obligate the United States in any way to make any additional, supplemental, continuation, or other award with respect to any approved application or portion of an approved application. For continuation support, grantees must make separate application at such times and in such a form as the Secretary may prescribe.

§ 57.2107 For what purposes may grant funds be spent?

(a) A grantee shall only spend funds it receives under this subpart according to the approved application and budget, the authorizing legislation, terms and conditions of the grant award, applicable cost principles specified in subpart Q of 45 CFR part 74, and these regulations.

(b) Any balance of federally obligated grant funds remaining unobligated by the grantee at the end of a budget period may be carried forward provided specific approval is granted by the Secretary. If at any time during a budget period it becomes apparent to the Secretary that the amount of Federal funds awarded and available to the grantee for that period, including any unobligated balance carried foward from prior periods, exceeds the grantee's needs for the period, the Secretary may adjust the amounts awarded by withdrawing the excess. A budget period is an interval of time (usually 12 months) into which the project period is divided for funding and reporting purposes.

(c) The grantee may spend grant funds to pay individual participants in the program a per diem when the grantee determines that—

(1) The training program requires the individual to establish a temporary new residence;

(2) The program is offered at a time when the individual would not be at the training site in a regular course of education or employed as a faculty member at that institution; and

(3) No other Federal financial assistance program is authorized to provide this support.

(d) The grantee may spend grant funds to provide one round trip per participant between the place of residence and the training site, provided that conditions in paragraphs (c)(1) and (2) of this section are met.

(e) The grantee may not spend grant funds for stipends, licensing exams, loan or scholarship support, support of research faculty or projects and related activities, establishment of research centers, establishment of planning offices, support of commercial ventures, entertainment, dependency allowances, new construction of facilities, acquisition of land, fund raising, or for sectarian instruction or any religious purpose.

[54 FR 28067, July 5, 1989, as amended at 57 FR 45740, Oct. 5, 1992]

§ 57.2108 What additional Department regulations apply to grantees?

Several other regulations apply to grants under this subpart. These include, but are not limited to:

42 CFR part 50, subpart D—Public Health Service grant appeals procedure
45 CFR part 16—Procedures of the Departmental Grant Appeals Board
45 CFR part 46—Protection of human subjects
45 CFR part 74—Administration of grants
45 CFR part 75—Informal grant appeals procedures
45 CFR part 76—Governmentwide Debarment and Suspension (non-procurement) and Governmentwide Requirements for Drug-Free Workplace (Grants)
45 CFR part 80—Nondiscrimination under programs receiving Federal assistance through the Department of Health and Human Services effectuation of title VI of the Civil Rights Act of 1964
45 CFR part 81—Practice and procedure for hearings under part 80 of this Title
45 CFR part 83—Regulation for the administration and enforcement of sections 794 and 855 of the Public Health Service Act
45 CFR part 84—Nondiscrimination on the basis of handicap in programs and activities receiving or benefiting from Federal financial assistance
45 CFR part 86—Nondiscrimination on the basis of sex in education programs and activities receiving or benefiting from Federal financial assistance
45 CFR part 91—Nondiscrimination on the basis of age in HHS programs or activities receiving Federal financial assistance
45 CFR part 93—New restrictions on lobbying.

[54 FR 28067, July 5, 1989, as amended at 57 FR 45740, Oct. 5, 1992; 61 FR 6126, Feb. 16, 1996]

§ 57.2109 What other audit and inspection requirements apply to grantees?

Each entity which receives a grant under this subpart must meet the requirements of 45 CFR part 74 concerning audit and inspection.

[61 FR 6126, Feb. 16, 1996; 61 FR 51020, Sept. 30, 1996]

§ 57.2110 Additional conditions.

The Secretary may impose additional conditions on any grant award before or at the time of any award if he or she determines that these conditions are necessary to assure or protect the advancement of the approved activity, the interest of the public health, or the conservation of grant funds.

Subpart W—Physician Shortage Area Scholarship Grants

AUTHORITY: Sec. 215, 58 Stat. 690, as amended (42 U.S.C. 216).

SOURCE: 39 FR 28730, Aug. 9, 1974, unless otherwise noted.

§ 57.2201 Applicability.

The regulations of this subpart are applicable to scholarship grants awarded under section 784 of the Public Health Service Act, which authorizes the Secretary to award scholarship grants to students of medicine and osteopathy who agree to engage in the full-time practice of primary care for a prescribed period of time (a) in a physician shortage area or (b) in such manner as to assure that of the patients receiving medical care in such practice a substantial portion will consist of migratory agricultural workers or members of their families.

§ 57.2202 Definitions.

As used in this subpart, the following terms shall have the following meanings:

(a) *Act* means the Public Health Service Act, as amended.

(b) *Secretary* means the Secretary of Health and Human Services and any other officer or employee of the Department of Health and Human Services to whom the authority involved has been delegated.

(c) *School* means a public or other nonprofit school of medicine or osteopathy which provides a course of study, or a portion thereof, which leads respectively to a degree of Doctor of Medicine or Doctor of Osteopathy and which is accredited as provided in section 721(b)(1)(B) of the Act.

(d) *Scholarship grant* means the amount of money awarded to an individual by the Secretary for an academic year pursuant to section 784(a) of the Act.

(e) *Full-time student* means a student who is enrolled, or accepted for enrollment, in a school and pursuing a course of study which constitutes a full-time academic workload, as determined by the school, leading to a degree specified in paragraph (c) of this section.

(f) *Academic year* means the traditional, approximately 9-month September to June annual session. For the purpose of computing academic year equivalents for students who, during a 12-month period, attend for a longer period than the traditional academic year, the academic year will be considered to be of 9 months' duration.

(g) *National of the United States* means (1) a citizen of the United States or (2) a person who, though not a citizen of the United States, owes permanent allegiance to the United States (8 U.S.C. 1101(a)(22)).

(h) *Professional training* means the course of study leading to the degree of doctor of medicine or doctor of osteopathy, plus a period, not to exceed a total of four years, of internship and residency training.

(i) *Low-income background* as applied to any individual means that the individual comes from a family with an annual income below low-income levels developed pursuant to § 57.605(c).

(j) *The practice of primary care* means the provision of health services characterized by the delivery of first contact medicine, the assumption of longitudinal responsibility for the patient regardless of the presence or absence of disease, and the integration of the physical, psychological and social aspects of health care to the limits of the capability of the practitioner. For purposes of this section, primary care shall include the fields of general practice, family practice, general internal medicine, general pediatrics, and general obstetrics and gynecology.

(k) *Migratory agricultural worker* means a domestic agricultural migratory worker as defined in § 56.102(d).

(l) *Physician shortage area* means an area designated by the Secretary pursuant to § 57.216(a)(5) as an area having a need for and shortage of physicians.

§ 57.2203 Eligibility.

To be eligible for a scholarship grant under this subpart, the applicant must:

(a) Be a national of the United States or a permanent resident of the Trust Territory of the Pacific Islands or a lawful permanent resident of the United States, Puerto Rico, the Virgin Islands or Guam;

(b) Be a full-time student in a school located in the United States, the Trust Territory of the Pacific Islands, Puerto Rico, the Virgin Islands, the Canal Zone, American Samoa or Guam; and

(c) Agree to engage in the full-time practice of primary care as defined in § 57.2202(j) in accord with conditions specified in § 57.2209.

§ 57.2204 Application.

Each eligible applicant desiring a scholarship grant under this subpart shall submit an application at such time and in such form as the Secretary may prescribe.

§ 57.2205 Priority for selection of scholarship recipients.

(a) When funds determined by the Secretary to be available for scholarship grants under this subpart are insufficient to permit the awarding of scholarships to all individuals applying therefor, the Secretary shall accord priority to eligible applicants as follows:

(1) First priority for scholarship grants shall be accorded to applicants who (i) are from a low-income background as defined in § 57.2202 (i), (ii) reside in a physician shortage area and (iii) agree to return to such area and engage in the full-time practice of primary care. For purposes of this paragraph, an individual resides in a physician shortage area if he presently is residing in such an area or if he (or his parents) resided in such an area in the year prior to his admission to an institution of higher education.

(2) Second priority shall be accorded to applicants meeting the criteria in paragraphs (a)(1) (ii) and (iii) of this section.

(3) Third priority shall be accorded to applicants meeting the criterion in paragraph (a)(1)(i) of this section.

(4) Fourth priority shall be accorded to other applicants.

(b) Where there are insufficient funds available to make scholarship grants to all members of any single priority grouping enumerated in paragraph (a) of this section, the following criteria will be used to accord priority within each affected priority group:

(1) Within the priority groupings specified in paragraphs (a) (1) and (2) of this section, the Secretary shall rank recipients according to the degree of the severity of shortage of physicians practicing primary care in such area. Scholarship grants shall be awarded within each priority group first to applicants within that grouping from physician shortage areas with the least favorable ratio of such physicians to the population to be served.

(2) Within the priority groupings specified in paragraphs (a) (3) and (4) of this section, the Secretary shall award scholarship grants within each priority group first to applicants who agree to practice primary care in a physician shortage area with a substantial portion of migratory agricultural workers in such area; second, to applicants within that grouping who agree to practice in a physician shortage area; and third, to applicants within that grouping who agree to practice in such place or places, facility or facilities, and in such manner as the Secretary finds necessary to assure that, of the patients receiving medical care in such practice, a substantial portion will consist of persons who are migratory agricultural workers or members of their families.

§ 57.2206 Grant award.

The Secretary may award scholarship grants to individuals who have been selected to receive scholarship grants in accordance with § 57.2205. Any such award under this subpart shall state the specific conditions under which the award is being made and shall indicate the distribution between funds awarded to cover the costs of tuition and fees payable to the school and funds awarded for the costs of equipment, supplies, books, and living expenses payable to the individual.

§ 57.2207 Amount of scholarship grant.

(a) The amount of the scholarship grant to any student for any academic year shall be the total of (1) the lesser of (i) $5,000 or (ii) the amount determined by the Secretary to be the cost of tuition and fees; plus (2) an allowance for equipment, supplies, books and living expenses which shall be the lesser of (i) $3,600 or (ii) the difference between $5,000 and the amount determined pursuant to paragraph (a)(1) of this section.

(b) The maximum amount of a scholarship grant during a 12-month period to any student enrolled in a school which provides a course of study longer than the traditional 9-month academic year may be proportionately increased.

§ 57.2208 Payment of scholarship grant.

The portion of a scholarship grant awarded for the costs of tuition and fees as indicated on the notice of grant award document will be paid directly to the school upon receipt of an invoice from the school. The portion of the scholarship grant awarded for the costs of equipment, supplies, books, and living expenses will be paid to the individual in equal monthly installments.

§ 57.2209 Conditions of scholarship grant.

(a) Any scholarship grant made to any individual under this subpart shall be awarded upon the condition that

such individual will, following completion of his professional training, engage in the full-time practice of primary care for a period of 12 continuous months for each academic year (i.e., 9 months) for which a scholarship grant was made, as follows:

(1) In the case of any individual selected pursuant to § 57.2205(a) (1) or (2), such practice must be in the physician shortage area to which such individual agreed to return: *Provided however,* That if the Secretary determines at the time the individual proposes to engage in the required practice that such area is no longer a physician shortage area and cannot reasonably be expected to become such an area within 2 years from such time, such practice shall, at the option of the individual, be either in any then current physician shortage area, or in such place or places, facility, or facilities, and in such manner as the Secretary finds necessary to assure that, of the patients receiving medical care in such practice, a substantial portion will consist of persons who are migratory agricultural workers or members of their families.

(2) In the case of any individual selected pursuant to § 57.2205(a) (3) or (4), such practice must be in accordance with the agreement described in § 57.2205(b)(2) (i.e., in a physician shortage area with a substantial portion of migratory agricultural workers in such area; a physician shortage area; or in such place or places, facility or facilities, and in such manner as may be necessary to assure that, of the patients receiving medical care in such practice, a substantial portion will consist of persons who are migratory agricultural workers or members of their families; as the case may be).

(b) Subject to the provision of § 57.2211(f) and except as provided in paragraph (c) of this section, any individual to whom the conditions of this section apply must complete the practice required by paragraph (a) of this section within a period beginning on the date of completion by the individual of his professional training, as determined by the Secretary, and not to exceed the period of practice determined in accordance with such paragraph (a) of this section, plus 6 months.

(c) Where an individual to whom the conditions of this section apply is currently performing an active duty service obligation under section 235 of the Act, the individual must complete the practice required by paragraph (a) of this section within a period beginning on the date of completion by the individual of his service obligation under section 225 of the Act or completion of his internship and residency training (not to exceed four years) if not previously received, whichever comes later, and not to exceed the period of practice determined in accordance with paragraph (a) of this section, plus 6 months.

(d) Where an individual has received scholarship grant support for four academic years, such individual shall be considered to have received scholarship grant support for only three academic years if the Secretary determines (1) that such individual has served his internship or residency in a hospital (i) which is located in a physician shortage area, or (ii) in which a substantial portion of the patients of such hospital consists of persons who are migratory agricultural workers or members of the families of such workers and (2) that while so serving such internship or residency, he has received training or professional experience designed to prepare him to engage in the practice of primary care.

(e) For purposes of paragraph (c)(2) of this section, (1) internships which will be recognized by the Secretary as providing training or professional experience designed to prepare an individual to engage in the practice of primary care are: Rotating internships without a major emphasis, rotating internships with an emphasis on internal medicine, rotating internships with an emphasis on pediatrics, rotating internships with an emphasis on obstetrics and gynecology, straight internships in internal medicine, straight internships in pediatrics and straight internships in obstetrics and gynecology; *Provided,* That such internships are approved or provisionally approved by the Council on Medical Education of the American Medical Association or the Board of Trustees of the American Osteopathic Association; and

(2) Residencies which will be recognized as providing such training or experience are those in general practice, family practice, general internal medicine, general pediatrics and general obstetrics and gynecology; *Provided,* That such residencies are approved or provisionally approved by the Council on Medical Education of the American Medical Association or the Board of Trustees of the American Osteopathic Association.

(f) No individual who has received a scholarship grant under this subpart may enter into an agreement with the Secretary pursuant to section 741(f) of the Act until either (1) such individual has completed the practice required by paragraph (a) of this section, or (2) the Secretary has determined that the United States is entitled to recover from such individual an amount determined in accordance with §57.2210. In no case, however, shall a scholarship grant under this subpart be considered an educational loan for purposes of section 741(f) of the Act.

[39 FR 28730, Aug. 9, 1974, as amended at 41 FR 26685, June 29, 1976]

§57.2210 Failure to comply.

(a) Subject to the provision of §57.2211, if any individual fails to complete the course of study or fails, within the time period set forth in §57.2209(b), to meet the applicable conditions of practice imposed by receipt of a scholarship grant for the full number of months to which such condition is applicable, the United States shall be entitled to recover from such individual an amount determined in accordance with section 784(c)(3) of the Act; *Provided however,* That no interest shall accrue on any amount due the United States during any period for which the Secretary has suspended the obligation to repay pursuant to §57.2211(b).

§57.2211 Waiver or suspension.

(a) Any obligation of any individual under this subpart will be cancelled upon the death of such individual as documented by a certification of death, or such other official proof as is conclusive under State law, and submitted to the Secretary.

(b) Subject to the provision of paragraph (f) of this section, where an individual fails to complete the practice required by §57.2209(a) within the period prescribed in §57.2209(b), the Secretary may waive or suspend for such period as determined by the Secretary the obligation of such individual to repay pursuant to §57.2210 where the Secretary determines that compliance by such individual with such obligation (1) is impossible, or (2) would involve extreme hardship to such individual and enforcement of such obligation with respect to such individual would be against equity and good conscience.

(c) For purposes of paragraph (b)(1) of this section, compliance by an individual will be deemed impossible where the Secretary determines, on the basis of such information and documentation as he may require, that the individual is permanently and totally disabled.

(d) For purposes of paragraph (b)(2) of this section, in determining whether compliance by an individual would involve extreme hardship to such individual and would be against equity and good conscience, the Secretary will take into consideration the following:

(1) The individual's present financial resources and obligations;

(2) The individual's estimated future financial resources and obligations;

(3) The reasons for the individual's failure to complete such practice within the prescribed period, such as problems of a personal nature; and

(4) The extent to which the individual is practicing his profession in a manner consistent with the purposes of section 784 of the Act.

(e) Where the Secretary determines that compliance by an individual with his obligation to engage in the practice of primary care in a specified shortage area pursuant to §57.2209(a) is impossible or would involve extreme hardship to such individual and enforcement of such obligation with respect to such individual would be against equity and good conscience, the Secretary may waive such obligation and permit the individual at his option to practice either in any then current physician shortage area, or in such place or places, facility or facilities, and in such manner as the Secretary finds necessary to assure that, of the

patients receiving medical care in such practice, a substantial portion will consist of persons who are migratory agricultural workers or members of their families. The Secretary will take into consideration in determining whether to grant a waiver under this paragraph the extent to which the individual has problems of a personal nature, e.g., physical or mental disability, terminal illness in the family, or need for financial support that cannot be supplied by the required service, which intrude upon the individual's ability to perform the required service in the specified shortage area.

(f) The Secretary may extend the period (prescribed in § 57.2209(b)) within which an individual must complete the practice required pursuant to § 57.2209(a) for a period not to exceed one year where the Secretary finds that (1) such individual is unable to complete such practice within such period because of a temporary physical or mental disability, or (2) completion by such individual of such practice within such period would involve extreme hardship to such individual and that failure to so extend such period would be against equity and good conscience.

Subpart X [Reserved]

Subpart Y—Grants for Nurse Practitioner and Nurse Midwifery Programs

AUTHORITY: Sec. 215 of the Public Health Service Act, 58 Stat. 690, as amended, 63 Stat. 35 (42 U.S.C. 216); sec. 822(a) of the Public Health Service Act, 89 Stat. 361, as amended by 99 Stat. 394–395 and 548 (42 U.S.C. 296m).

§ 57.2401 Applicability.

The regulations of this subpart are applicable to the award of grants to public or private nonprofit schools of nursing and public health, public or private nonprofit schools of medicine which received grants under section 822(a) of the Public Health Service Act (42 U.S.C. 296m) prior to October 1, 1985, public or private nonprofit hospitals, and other public or private nonprofit entities under section 822(a) to meet the cost of projects to (a) plan, develop, and operate, (b) expand, or (c) maintain programs for the education of nurse practitioners or nurse midwives.

[57 FR 45741, Oct. 5, 1992]

§ 57.2402 Definitions.

As used in this subpart:

(a) *Act* means the Public Health Service Act, as amended.

(b) *Secretary* means the Secretary of Health and Human Services and any other officer or employee of the Department of Health and Human Services to whom the authority involved has been delegated.

(c) *Council* means the National Advisory Council on Nursing Education and Practice (established by section 851 of the Act).

(d) *School of nursing* means a collegiate associate degree, or diploma school of nursing.

(e) *Collegiate school of nursing* means a department, division, or other administrative unit in a college or university which provides primarily or exclusively a program of education in professional nursing and allied subjects leading to the degree of bachelor of arts, bachelor of science, bachelor of nursing, or to an equivalent degree, or to a graduate degree in nursing, and including advanced education related to such program of education provided by such school, but only if such program, or such unit, college or university is accredited as provided in section 853(6) of the Act.

(f) *Associate degree school of nursing* means a department, division or other administrative unit in a junior college, community college, college, or university which provides primarily or exclusively a 2-year program of education in professional nursing and allied subjects leading to an associate degree in nursing or to an equivalent degree, but only if such program, or such unit, college, or university is accredited as provided in section 853(6) of the Act.

(g) *Diploma school of nursing* means a school affiliated with a hospital or university, or an independent school, which provides primarily or exclusively a program of education in professional nursing and allied subjects leading to a diploma or to equivalent indicia that such program has been satisfactorily completed, but only if such program, or such affiliated school or

such hospital or university or such independent school is accredited as provided in section 853(6) of the Act.

(h) *School of medicine* means a school which provides education leading to a degree of doctor of medicine and which is accredited by a recognized body or bodies approved for such purpose by the Secretary of Education.

(i) *School of public health* means a school which provides education leading to a graduate degree in public health and which is accredited by a recognized body or bodies approved for such purpose by the Secretary of Education.

(j) *Nonprofit* refers to the status of an entity which is a corporation or association or is owned and operated by one or more corporations or associations no part of the net earnings of which inures, or may lawfully inure, to the benefit of any private shareholder or individual.

(k) *State* means, in addition to the several States, the District of Columbia, the Commonwealth of Puerto Rico, the Commonwealth of the Northern Mariana Islands, the Virgin Islands, Guam, American Samoa, the Republic of Palau, the Republic of the Marshall Islands, and the Federated States of Micronesia.

(l) *Program director* means a qualified individual designated by the grantee and approved by the Secretary who is to be functionally responsible for the education program being supported under this subpart.

(m) *Project period* mean the total time for which support for a project has been approved, including any extensions thereof.

(n) *Budget period* means the interval of time into which the approved activity is divided for budgetary and reporting purposes.

(o) *Programs for the education of nurse practitioners or nurse midwives* means full-time educational programs for registered nurses (irrespective of the type of school of nursing in which the nurses received their training) which meets the guidelines prescribed by the Secretary in the Appendix to this subpart and which has as its objective the education of nurses (including pediatric and geriatric nurses) who will, upon completion of their studies in such programs, be qualified to effectively provide primary health care, including primary health care in homes and in ambulatory care facilities, long-term care facilities (where appropriate), and other health care institutions.

(p) *Nurse practitioner* means a registered nurse who has successfully completed a formal program of study designed to prepare registered nurses to perform in an expanded role in the delivery of primary health care including the ability to:

(1) Assess the health status of individuals and families through health and medical history taking, physical examination, and defining of health and developmental problems;

(2) Institute and provide continuity of health care to clients (patients), work with the client to insure understanding of and compliance with the therapeutic regimen within established protocols, and recognize when to refer the client to a physician or other health care provider;

(3) Provide instruction and counseling to individuals, families, and groups in the areas of health promotion and maintenance, including involving such persons in planning for their health care; and

(4) Work in collaboration with other health care providers and agencies to provide, and where appropriate, coordinate services to individuals and families.

(q) *Nurse-midwife* means a registered nurse who has completed a formal program of study designed to prepare registered nurses to perform in an expanded role in the delivery of primary health care to women and babies including the management of normal antepartum, intrapartum, and postpartum care as well as family planning and gynecology.

(r)(1) *Primary health care* means care which may be initiated by the client or provider in a variety of settings and which consists of a broad range of personal health care services including:

(i) Promotion and maintenance of health;

(ii) Prevention of illness and disability;

(iii) Basic care during acute and chronic phases of illness;

(iv) Guidance and counseling of individuals and families;

(v) Referral to other health care providers and community resources when appropriate; and

(vi) Nurse midwifery services (when appropriate).

(2) In providing such services—

(i) The physical, emotional, social, and economic status, as well as the cultural and environmental backgrounds, of individuals, families, and communities (where applicable) are considered;

(ii) The client is provided access to the health care system; and

(iii) A single provider or team of providers, along with the client, is responsible for the continuing coordination and management of all aspects of basic health services needed for individual and family care.

[43 FR 43416, Sept. 25, 1978, as amended at 52 FR 27342, July 21, 1987; 57 FR 45741, Oct. 5, 1992; 61 FR 6126, Feb. 16, 1996]

§ 57.2403 Eligibility.

(a) *Eligible applicants.* To be eligible for a grant under this subpart the applicant shall:

(1) Be a public or private nonprofit school of nursing or public health, a public or private nonprofit school of medicine which received grants under this subpart prior to October 1, 1985, public or private nonprofit hospital; or other public or private nonprofit entity; and

(2) Be located in a State.

(b) *Eligible projects.* A grant under this subpart may be made to an eligible applicant to meet the cost of:

(1) A project to plan, develop, and operate a program for the education of nurse practitioners or nurse midwives (which will be in operation no later than 12 months after the award of a grant under this subpart);

(2) A project to expand a program for the education of nurse practitioners or nurse midwives through one or a combination of the following activities:

(i) A planned increase in student enrollment;

(ii) The addition to the program of one or more fields of clinical practice;

(iii) The addition of a new education site for the total program; or

(3) A project to maintain a program for the education of nurse practitioners and nurse midwives.

[43 FR 43416, Sept. 25, 1978, as amended at 52 FR 27343, July 21, 1987; 57 FR 45741, Oct. 5, 1992]

§ 57.2404 Application.

(a) Each eligible applicant desiring a grant under this subpart shall submit an application in such form and at such time as the Secretary may prescribe.

(b) The application shall be executed by an individual authorized to act for the applicant and to assume on behalf of the applicant the obligations imposed by the terms and conditions of any award, including the regulations of this subpart.

(c) In addition to such other pertinent information as the Secretary may require, an application for a grant under this subpart shall contain the following:

(1) A full and adequate description of the proposed project, including:

(i) Information concerning the need for and significance of the proposed project.

(ii) A description of the setting in which the education program will be conducted and the primary health care needs to which such program will be responsive.

(iii) A detailed description of the planning and developmental activities to be carried out or which have been accomplished by the applicant.

(iv) A detailed time plan for each year of the project period, identifying target dates for project activities and including any plans for continuing such activities beyond the project period.

(v) A description of specific measurable objectives for the proposed project consistent with the purposes of section 822 of the Act.

(vi) A detailed plan for achieving the stated objectives of the proposed project.

(vii) A description of the program curriculum, including course content and the number of hours of classroom instruction, supervised laboratory, and clinical practice.

(viii) A plan and methodology for evaluating the education program in

accordance with the requirements of § 57.2405(c).

(ix) Where the education includes a preceptorship, a description of such preceptorship, including length, type of practice, and amount of faculty supervision.

(x) A description of recruitment plans and criteria for the selection and admission of students.

(xi) An estimate of the number of students to be enrolled during the project period.

(xii) In the case of a project to expand a nurse practitioner or nurse midwifery education program, a description of the manner in which the program is to be expanded and a plan for achieving such expansion during the project period.

(2) Evidence satisfactory to the Secretary that the applicant has secured any required institutional clearances and approvals for the planning, development, and operation of the program.

(3) Information concerning the background and qualifications of the program director, staff, and consultants.

(4) Evidence satisfactory to the Secretary that the applicant will have available adequate faculty, staff facilities, clinical practice settings, and equipment for the conduct of the proposed project.

(5) A description of any written agreements with other institutions or organizations for carrying out the proposed project.

(6) A detailed budget for the proposed project and a justification of the amount of grant funds requested.

(7) A description of financial resources available to the applicant to assure the sound establishment, maintenance, and continuation of the proposed project beyond the project period.

(d) The application shall contain an assurance satisfactory to the Secretary that—

(1) In the case of a project to plan, develop, and operate a program for the education of nurse practitioners or nurse midwives, such program will upon its development meet the guidelines set forth in the Appendix of this subpart, or

(2) In the case of a project to expand or maintain a program for the education of nurse practitioners or nurse midwives, such program meets the guidelines set forth in the appendix to this subpart.

(Approved by the Office of Management and Budget under control number 0915–0060)

[42 FR 60883, Nov. 29, 1977, as amended at 49 FR 38114, Sept. 27, 1984; 52 FR 27343, July 21, 1987; 57 FR 45741, Oct. 5, 1992]

§ 57.2405 Project requirements.

A project supported under this subpart shall be conducted in accordance with the following requirements:

(a) The project shall conduct its program for the education of nurse practitioners or nurse midwives in accordance with the guidelines prescribed by the Secretary and set forth in the Appendix to this subpart.

(b) The program director shall be responsible for the conduct of the education program unless replaced by another individual found by the Secretary to be qualified to carry out such responsibilities. Where the program director becomes unable to function in such capacity, the Secretary shall be notified as soon as possible.

(c) In accordance with the plan set forth in its approved application, the project shall evaluate the effectiveness of the program in relation to its purposes and objectives.

(Approved by the Office of Management and Budget under control number 0915–0060)

[43 FR 43416, Sept. 25, 1978, as amended at 52 FR 27343, July 21, 1987; 61 FR 51788, Oct. 4, 1996]]

§ 57.2406 Evaluation and grant awards.

(a) *Evaluation.* (1) Within the limits of funds available for such purpose, the Secretary, after consultation with the Council, may award grants to those applicants whose projects will in his judgment best promote the purposes of section 822 of the Act, taking into consideration:

(i) The degree to which the project plan adequately provides for meeting the requirements set forth in § 57.2405 and the appendix to this subpart;

(ii) The potential effectiveness of the proposed project in carrying out the education purposes of section 822 of the Act and this subpart;

(iii) The capability of the applicant to carry out the proposed project;

(iv) The extent to which the project has joint program direction by qualified nurse and physician educators;

(v) The soundness of the fiscal plan for assuring effective utilization of grant funds; and

(vi) The potential of the project to continue on a self-sustaining basis after the project period.

(2) Pursuant to section 822(a)(1) of the Act, the Secretary will give special consideration to:

(i) Projects for programs for the education of nurse practitioners or nurse midwives who will practice in health professional shortage areas (designated under section 332 of the Act); and

(ii) Projects for education programs which emphasize education respecting the special problems of geriatric patients (particularly problems in the delivery of preventive care, acute care, and long-term care, including home health care and institutional care to such patients) and education to meet the particular needs of nursing home patients and patients confined to their homes.

(3) In determining the funding of applications approved under paragraph (a)(1) of this section, the Secretary will also consider other special factors relating to national needs as the Secretary may from time to time announce in the FEDERAL REGISTER.

(b) *Grant awards.* (1) The Secretary will determine the amount of any award on the basis of his or her estimate on the sum necessary for the cost (including both direct and indirect costs) of the project.

(2) All grant awards shall be in writing and shall set forth the amount of funds granted and the period for which such funds will be available for obligation by the grantee.

(3) Neither the approval of any project nor the award of any grant shall commit or obligate the United States in any way to make any additional, supplemental, continuation, or other award with respect to any approved project or portion thereof. For continuation support, grantees must make separate application at such times and in such form as the Secretary may prescribe.

(c) *Noncompeting continuation awards.* If a grantee has filed an application for continuation support and within the limits of funds available for this purpose, the Secretary may make a grant award for an additional budget period for any previously approved project if (1) the application is for a project which meets the regulations of this subpart and (2) on the basis of such progress and accounting records as may be required, the Secretary finds that the project's activities during the current budget period justify continued support of the project for an additional budget period. If the Secretary decides to continue support, the amount of the grant award will be determined in accordance with paragraph (b)(1) of this section. If the Secretary decides not to continue supporting a project for an additional budget period, he will notify the grantee in writing before the end of the current budget period. In addition, the Secretary may provide financial support for the orderly phaseout of the supported project, if he determines that such support is necessary.

[43 FR 43416, Sept. 25, 1978, as amended at 52 FR 27343, July 21, 1987; 53 FR 14792, Apr. 26, 1988; 57 FR 45741, Oct. 5, 1992]

§ 57.2407 Grant payments.

The Secretary will from time to time make payments to the grantee of all or a portion of any grant award, either by way of reimbursement for expenses incurred in the budget period, or in advance for expenses to be incurred, to the extent he determines such payments necessary to promote prompt intitiation and advancement of the approved project.

[42 FR 60883, Nov. 29, 1977]

§ 57.2408 Expenditure of grant funds.

(a) Any funds granted pursuant to this subpart shall be expended solely for carrying out the approved project in accordance with section 822 of the Act, the regulations of this subpart, the terms and conditions of the award, and the applicable cost principles prescribed by subpart Q of 45 CFR part 74; *Provided,* That such funds shall not be expended for sectarian instruction or for any religious purpose.

(b) Any balance of federally obligated grant funds remaining unobligated by the grantee at the end of a budget period may be carried forward provided specific approval is granted by the Secretary. If at any time during a budget period it becomes apparent to the Secretary that the amount of Federal funds awarded and available to the grantee for that period, including any unobligated balance carried forward from prior periods, exceeds the grantee's needs for the period, the Secretary may adjust the amounts awarded by withdrawing the excess. A budget period is an interval of time (usually 12 months) into which the project period is divided for funding and reporting purposes.

[43 FR 43416, Sept. 25, 1978, as amended at 52 FR 27343, July 21, 1987; 57 FR 45741, Oct. 5, 1992]

§ 57.2409 What additional Department regulations apply to grantees?

Several other regulations apply to grants under this subpart. These include, but are not limited to:

42 CFR part 50, subpart D—Public Health Service Grant Appeals Procedure.
45 CFR part 16—Procedures of the Departmental Grant Appeals Board.
45 CFR part 46—Protection of Human Subjects.
45 CFR part 74—Administration of Grants.
45 CFR part 75—Informal Grant Appeals Procedures.
45 CFR part 76—Governmentwide Debarment and Suspension (nonprocurement) and Governmentwide Requirements for Drug-Free Workplace (Grants)
45 CFR part 80—Nondiscrimination Under Programs Receiving Federal Assistance Through the Department of Health and Human Services Effectuation of title VI of the Civil Rights Act of 1964.
45 CFR part 81—Practice and Procedure for Hearings Under part 80 of this title.
45 CFR part 83—Regulation for the Administration and Enforcement of sections 794 and 855 of the Public Health Service Act.
45 CFR part 84—Nondiscrimination on the Basis of Handicap in Programs and Activities Receiving or Benefiting From Federal Financial Assistance.
45 CFR part 86—Nondiscrimination on the Basis of Sex in Education Programs and Activities Receiving or Benefiting From Federal Financial Assistance.
45 CFR part 91—Nondiscrimination on the Basis of Age in HHS Programs Activities Receiving Federal Financial Assistance.
45 CFR part 93—New restrictions on lobbying.

[52 FR 27344, July 21, 1987, as amended at 57 FR 45741, Oct. 5, 1992; 61 FR 6126, Feb. 16, 1996]

§ 57.2410 Additional conditions.

The Secretary may with respect to any grant award impose additional conditions prior to or at the time of any award when in his judgment such conditions are necessary to assure or protect advancement of the approved project, the interests of the public health, or the conservation of grant funds.

[43 FR 43416, Sept. 25, 1978. Redesignated at 52 FR 27344, July 21, 1987]

APPENDIX TO SUBPART Y—GUIDELINES FOR NURSE PRACTITIONER AND NURSE MIDWIFERY PROGRAMS

The guidelines set forth below have been prescribed by the Secretary after consultation with appropriate educational organizations and professional nursing and medical organizations, as required by section 822(a)(2)(B) of the Public Health Service Act.

A. *Definitions.* 1. ''Programs for the education of nurse pactitioners or nurse midwives'' means a full-time educational program for registered nurses (irrespective of the type of school of nursing in which the nurses received their training) which meets the guidelines prescribed herein and which has as its objective the education of nurses (including pediatric and geriatric nurses) who will, upon completion of their studies in such program be qualified to effectively provide primary health care, including primary health care in homes and in ambulatory care facilities, long-term care facilities, where appropriate, and other health care institutions.

2. ''Nurse practitioner'' means a registered nurse who has successfully completed a formal program of study designed to prepare registered nurses to perform in an expanded role in the delivery of primary health care including the ability to:

a. Assess the health status of individuals and families through health and medical history taking, physical examination, and defining of health and developmental problems;

b. Institute and provide continuity of health care to clients (patients), work with the client to insure understanding of and compliance with the therapeutic regimen within established protocols, and recognize when to refer the client to a physician or other health care provider;

c. Provide instruction and counseling to individuals, families and groups in the areas

of health promotion and maintenance, including involving such persons in planning for their health care; and

d. Work in collaboration with other health care providers and agencies to provide, and where appropriate, coordinate services to individuals and families.

3. ''Nurse-midwife'' means a registered nurse who has completed a formal program of study designed to prepare registered nurses to perform in an expanded role in the delivery of primary health care to women and babies including the management of normal antepartum, intrapartum, and postpartum care as well as family planning and gynecology.

4. ''Primary health care'' means care which may be initiated by the client or provider in a variety of settings and which consists of a broad range of personal health care services including:

a. Promotion and maintenance of health;

b. Prevention of illness and disability;

c. Basic care during acute and chronic phases of illness;

d. Guidance and counseling of individuals and families; and

e. Referral to other health care providers and community resources when appropriate; and

f. Nurse midwifery services (where appropriate).

In providing such services (i) the physical, emotional, social, and economic status, as well as the cultural and environmental backgrounds of individuals, families, and communities (where applicable) are considered; (ii) the client is provided access to the health care system; and (iii) a single provider or team of providers, along with the client, is responsible for the continuing coordination and management of all aspects of basic health services needed for individual and family care.

B. *Organization and administration.* 1. A nurse practitioner or nurse-midwifery education program shall have active collaboration with nurses and physicians who have expertise relevant to the nurse practitioner or nurse midwife role and primary health care, to assist in the planning, development, and operation of such a program. In addition, where the institution or organization conducting the program is other than a school of nursing, medicine, or public health, such collaboration shall be with nurses and physicians who are affiliated with either a collegiate school of nursing, school of medicine, or school of public health.

2. Co-program directors from nursing and medicine are recommended.

C. *Student enrollment.* 1. A nurse practitioner or nurse midwifery education program shall have an enrollment of not less than six full-time equivalent students in each class.

2. All students enrolled in a nurse practitioner or nurse midwifery education program must be licensed to practice nursing (a) at the time of enrollment, or (b) in the case of a program leading to a graduate degree in nursing, at or prior to the time of completion of a program.

3. The policies for the recruitment and selection of students shall be consistent with the requirements of the sponsoring institution and developed in cooperation with the faculty responsible for conducting the education. Admission criteria shall take into consideration the educational background and work experience of applicants.

D. *Length of program.* A nurse practitioner or nurse midwifery education program shall be a minimum of 1 academic year (or 9 months) in length and shall include at least 4 months (in the aggregate) of classroom instruction.

E. *Curriculum.* 1. A nurse practitioner or nurse midwifery education program shall be a discrete program consisting of classroom instruction and faculty-supervised clinical practice designed to teach registered nurses the knowledge and skills needed to perform the functions of a nurse practitioner or nurse midwife specified in the defintion of that term as set forth in these guidelines. The curriculum shall be developed and implemented cooperatively by nurse educators, physicans, and appropriate representatives of other health disciplines. The following are examples of broad areas of program content which should be included: Communications and interviewing (history taking); basic physical examination including basic pathophysiology; positive health maintenance; care during acute and chronic phases of illness; management of chronic illness; health teaching and counseling; role realignment and establishment of collaborative roles with physicians and other health care providers; and community resources. The program content, both classroom instruction and clinical practice, should be developed so that the nurse practitioner or nurse midwife is prepared to provide primary health care as defined in these guidelines.

2. The curriculum may include a preceptorship, in which the student is assigned to a designated preceptor (a nurse practitioner, nurse midwife, or physician) who is responsible for teaching, supervising, and evaluating the student and for providing the student with an environment which permits observation and active participation in the delivery of primary health care. If a preceptorship is included, it shall be under the direction and supervision of the faculty.

F. *Faculty qualifications.* A nurse practitioner or nurse midwifery education program shall have a sufficient number of qualified nursing and medical (and other related professional) faculty with academic preparation and clinical expertise relevant to their areas

of teaching responsibility and with demonstrated ability in the development and implementation of educational programs.

G. *Resources.* 1. A nurse practitioner or nurse midwifery education program shall have available sufficient educational and clinical resources including a variety of practice settings, particularly in ambulatory care.

2. Clinical practice facilities shall be adequate in terms of space and equipment, number of clients, diversity of client age, and need for care, number of students enrolled in the program, and other students using the facility for education purposes.

3. Where the institution or organization conducting the program does not provide the clinical practice settings itself, it shall provide for such settings through written agreements with other appropriate institutions or organizations.

4. Where the institution or organization conducting the program is other than a school of nursing, medicine, or public health, it shall provide for sufficient educational expertise through writtten agreeements with a collegiate school of nursing, school of medicine, or school of public health.

[42 FR 60883, Nov. 29, 1977, as amended at 43 FR 27837, June 27, 1978; 52 FR 27344, July 21, 1987; 57 FR 45741, Oct. 5, 1992]

Subpart Z—Grants for Advanced Nurse Education Programs

AUTHORITY: Sec. 215 of the Public Health Service Act, 58 Stat. 690, as amended by 63 Stat. 35 (42 U.S.C. 216); sec. 821 of the Public Health Service Act, 89 Stat. 361; as amended by 95 Stat. 930, 99 Stat. 394 and 548, and Pub. L. 102–408, 106 Stat. 2072 (42 U.S.C. 296l).

§ 57.2501 Applicability.

The regulations of this subpart apply to the award of grants to public and private nonprofit collegiate schools of nursing under section 821 of the Public Health Service Act (42 U.S.C. 296l) to meet the costs of projects to:

(a) Plan, develop, and operate new programs; or

(b) Significantly expand existing programs leading to advanced degrees that prepare nurses to serve as nurse educators or public health nurses, or in other clinical nurse specialties determined by the Secretary to require advanced education.

[61 FR 6127, Feb. 16, 1996]

§ 57.2502 Definitions.

As used in this subpart:

Act means the Public Health Service Act, as amended.

Advanced nurse education program means a program of study in a collegiate school of nursing which leads to masters' and doctoral degrees and which prepares nurses to serve as nurse educators, administrators, or researchers or to serve in clinical nurse specialties determined by the Secretary to require advanced education.

Budget period means the interval of time into which the approved activity is divided for budgetary purposes, as specified in the grant award document.

Collegiate school of nursing means a department, division, or other administrative unit in a college or university which provides primarily or exclusively a program of education in professional nursing and allied subjects leading to the degree of bachelor of arts, bachelor of science, bachelor of nursing, or to an equivalent degree, or to masters' and doctoral degrees in nursing, and including advanced education related to this type of educational program provided by the school, but only if the program, or unit, college or university is accredited.

Construction means (1) the construction of new buildings and the acquisition, expansion, remodeling, replacement, and alteration of existing buildings including architects' fees but not including the cost of acquisition of land (except in the case of acquisition of an existing building), offsite improvements, living quarters, or patient-care facilities, and (2) equipping new buildings and existing buildings, whether or not acquired, expanded, remodeled, or altered.

Council means the National Advisory Council on Nurse Education and Practice established by section 851(a) of the Act.

Nonprofit refers to the status of an entity which is a corporation or association, or is owned and operated by one or more corporations or associations no part of the net earnings of which inures, or may lawfully inure, to the benefit of any private shareholder or individual.

Professional nurse means a registered nurse who has received initial nursing preparation from a diploma, associate

degree, or collegiate school of nursing as defined in section 853 of the Act and who is currently licensed to practice nursing.

Project period means the total time for which support for a project has been approved, as specified in the grant award document.

Secretary means the Secretary of Health and Human Services and any other officer or employee of the Department of Health and Human Services to whom the authority involved has been delegated.

State means, in addition to the several States, the District of Columbia, the Commonwealth of Puerto Rico, the Commonwealth of the Northern Mariana Islands, the Virgin Islands, Guam, American Samoa, the Republic of Palau, the Republic of the Marshall Islands, and the Federated States of Micronesia.

[43 FR 43416, Sept. 25, 1978, as amended at 48 FR 45113, Oct. 3, 1983; 52 FR 27346, July 21, 1987; 57 FR 45741, Oct. 5, 1992; 61 FR 6127, Feb. 16, 1996]

§ 57.2503 Eligibility.

(a) *Eligible applicants.* To be eligible for a grant under this subpart the applicant shall:

(1) Be a public or private nonprofit collegiate school of nursing.

(2) Be located in a State.

(b) *Eligible projects.* A grant under this subpart may be made to an eligible applicant to meet the cost of:

(1) A project to plan, develop, and operate an advanced nurse education program. The planning period of this project is limited to 1 year. The project must enroll students before the end of the project period;

(2) A project to significantly expand an advanced nurse education program through one or more of the following activities:

(i) The addition to the masters' or doctoral program of a new clinical, research, or functional (administration or teaching) specialty area,

(ii) A planned increase in student enrollment during the project period, or

(iii) The addition of a new educational site for the program; or

[43 FR 43416, Sept. 25, 1978, as amended at 48 FR 45113, Oct. 3, 1983; 52 FR 27346, July 21, 1987; 57 FR 45741, Oct. 5, 1992; 61 FR 6127, Feb. 16, 1996]

§ 57.2504 Application.

(a) Each eligible applicant desiring a grant under this subpart shall submit an application in the form and at such time as the Secretary may prescribe.

(b) The application shall be signed by an individual authorized to act for the applicant and to assume on behalf of the applicant the obligations imposed by the terms and conditions of any award, including the regulations of this subpart.

(c) In addition to other pertinent information which the Secretary may require, an application for a grant under this subpart shall contain:

(1) A proposal for a project to:

(i) Plan, develop, and operate; or

(ii) Significantly expand an advanced nurse education program;

(2) Information documenting the need for the proposed project;

(3) A description of specific attainable and measurable objectives for the proposed project consistent with the purposes of section 821 of the Act;

(4) A detailed plan for achieving and measuring the stated objectives of the proposed project;

(5) A description of the anticipated impact of the proposed project, including its potential contribution to nursing;

(6) Evidence satisfactory to the Secretary that the applicant will have available adequate resources for the conduct of the proposed project, including adequate faculty, staff, equipment, facilities, and an appropriate clinical practice setting or settings;

(7) A detailed budget for the proposed project and a justification of the amount of grant funds requested;

(8) A description of any Federal financial support related to the proposed project which the applicant is currently receiving;

(9) A detailed timetable for carrying out the activities of the proposed project, including any plans for continuing activities beyond the project period;

(10) A description of the background and qualifications of the project staff and any proposed consultants;

(11) Information concerning the source and number of potential students for the education program and a description of plans, if any, to encourage graduates of the education program to practice in States in need of nurses prepared in the specialty in which education is to be provided;

(12) A plan to sustain the project beyond the period during which Federal assistance is available; and

(13) A plan to attract and retain a higher than average number of minority and financially needy students.

(d) In the case of a project to significantly expand an advanced nurse education program, the application shall contain an assurance satisfactory to the Secretary that the applicant will expend, in carrying out the program for which a grant under this subpart is sought, an amount of non-Federal funds (excluding costs of construction) at least as great as the average amount of non-Federal funds (excluding expenditures of a nonrecurring nature, including costs of construction) expended for this purpose during the 3 fiscal years immediately preceding the fiscal year for which the grant is sought.

(Approved by the Office of Management and Budget under control number 0915–0060)

[43 FR 43416, Sept. 25, 1978, as amended at 48 FR 45113, Oct. 3, 1983; 52 FR 27346, July 21, 1987; 57 FR 45741, Oct. 5, 1992; 61 FR 6127, Feb. 16, 1996]

§ 57.2505 Project requirements.

(a) A project supported under this subpart shall be conducted in accordance with its approved application.

(b) A project supported under this subpart shall enroll professional nurses, as defined in § 57.2502, or students who will be professional nurses, as defined in § 57.2502, at or prior to completion of the advanced nurse education program.

[43 FR 43416, Sept. 25, 1978, as amended at 52 FR 27347, July 21, 1987]

§ 57.2506 Evaluation and grant awards.

(a) *Evaluation.* Within the limits of funds available for this purpose, the Secretary, after consultation with the Council, may award grants to those applicants whose projects will, in his or her judgment, best promote the purposes of section 821 of the Act, taking into consideration among other pertinent factors:

(1) The need for the proposed project including, with respect to projects to provide education in professional nursing specialties determined by the Secretary to require advanced education:

(i) The current or anticipated need for professional nurses educated in the specialty; and

(ii) The relative number of programs offering advanced education in the specialty;

(2) The need for nurses in the specialty in which education is to be provided in the State in which the education program is located, as compared with the need for these nurses in other States;

(3) The degree to which the applicant proposes to recruit students from States in need of nurses in the specialty in which education is to be provided, and to promote their return to these States following education;

(4) The degree to which the applicant proposes to encourage graduates to practice in States in need of nurses in the specialty in which education is to be provided;

(5) The potential effectiveness of the proposed project in carrying out the educational purposes of section 821 of the Act and this subpart;

(6) The capability of the applicant to carry out the proposed project;

(7) The soundness of the fiscal plan for assuring effective utilization of grant funds; and

(8) The potential of the project to continue on a self-sustaining basis after the period of grant support; and

(9) The degree to which the applicant proposes to attract, retain and graduate minority and financially needy students.

(b) *Funding preference.* In determining the funding of applications approved under paragraph (a) of this section, the

Secretary may from time to time announce in the FEDERAL REGISTER special factors relating to national needs.

(c) *Grant awards.* (1) The Secretary will determine the amount of any award on the basis of his or her estimate on the sum necessary for the cost (including both direct and indirect costs) of the project.

(2) All grant awards shall be in writing and shall set forth the amount of funds granted and the period for which the funds will be available for obligation by the grantee.

(3) Neither the approval of any project nor the award of any grant shall commit or obligate the United States in any way to make any additional, supplemental, continuation, or other award with respect to any approved project or portion thereof. For continuation support, grantees must make separate application annually in a form and at the time that the Secretary may require.

(d) *Noncompeting continuation awards.* Within the limits of funds available for this purpose, the Secretary may make a grant award for an additional budget period for any previously approved project on the basis of an application and those progress and accounting records which may be required. If the Secretary finds that the project's activities during the current budget period justify continued support of the project for an additional budget period, and the Secretary decides to continue support, the amount of the grant award will be determined in accordance with paragraph (c)(1) of this section. If the Secretary decides not to continue support for an additional budget period, he or she will notify the grantee in writing before the end of the current budget period. The Secretary may provide financial support for the orderly phase-out of the supported project, if he or she determines that this support is necessary.

[43 FR 43416, Sept. 25, 1978, as amended at 52 FR 27347, July 21, 1987; 52 FR 28511, July 30, 1987; 53 FR 14792, Apr. 26, 1988; 61 FR 6127, Feb. 16, 1996]

§ 57.2507 Grant payments.

The Secretary will from time to time make payments to the grantee of all or a portion of any grant award, either by way of reimbursement for expenses incurred in the budget period, or in advance for expenses to be incurred, to the extent he or she determines these payments necessary to promote prompt initiation and advancement of the approved project.

[43 FR 43416, Sept. 25, 1978]

§ 57.2508 Expenditure of grant funds.

(a) Any funds granted under this subpart as well as other funds to be used in performance of the approved project shall be expended solely for carrying out the approved project in accordance with section 821 of the Act, the regulations of this subpart, the terms and conditions of the award, except that funds shall not be expended for sectarian instruction or for any religious purpose.

(b) Any balance of federally obligated grant funds remaining unobligated by the grantee at the end of a budget period may be carried forward provided specific approval is granted by the Secretary. If at any time during a budget period it becomes apparent to the Secretary that the amount of Federal funds awarded and available to the grantee for that period, including any unobligated balance carried forward from prior periods, exceeds the grantee's needs for the period, the Secretary may adjust the amounts awarded by withdrawing the excess. A budget period is an interval of time (usually 12 months) into which the project period is divided for funding and reporting purposes.

[43 FR 43416, Sept. 25, 1978, as amended at 52 FR 27347, July 21, 1987; 57 FR 45742, Oct. 5, 1992]

§ 57.2509 What additional Department regulations apply to grantees?

Several other regulations apply to grants under this subpart. These include, but are not limited to:

42 CFR part 50, subpart D—Public Health Service Grant Appeals Procedure.

45 CFR part 16—Procedures of the Departmental Grant Appeals Board.

45 CFR part 46—Protection of Human Subjects.

45 CFR part 74—Administration of Grants.

45 CFR part 75—Informal Grant Appeals Procedures.

45 CFR part 76—Governmentwide Debarment and Suspension (nonprocurement) and Governmentwide Requirements for Drug-Free Workplace (Grants)

45 CFR part 80—Nondiscrimination Under Programs Receiving Federal Assistance Through the Department of Health and Human Services Effectuation of title VI of the Civil Rights Act of 1964.

45 CFR part 81—Practice and Procedure for Hearings Under part 80 of this title.

45 CFR part 83—Regulation for the Administration and Enforcement of Section 794 and 855 of the Public Health Service Act.

45 CFR part 84—Nondiscrimination on the Basis of Handicap in Programs and Activities Receiving or Benefiting From Federal Financial Assistance.

45 CFR part 86—Nondiscrimination on the Basis of Sex in Education Programs and Activities Receiving or Benefiting From Federal Financial Assistance.

45 CFR part 91—Nondiscrimination on the Basis of Age in HHS Programs or Activities Receiving Federal Financial Assistance.

45 CFR part 93—New restrictions on lobbying.

[52 FR 27347, July 21, 1987, as amended at 57 FR 45742, Oct. 5, 1992; 61 FR 6127, Feb. 16, 1996]

§ 57.2510 Additional conditions.

The Secretary may with respect to any grant award impose additional conditions prior to or at the time of any award when in his or her judgment such conditions are necessary to assure or protect advancement of the approved project, the interests of the public health, or the conservation of grant funds.

[43 FR 43416, Sept. 25, 1978. Redesignated at 52 FR 27347, July 21, 1987]

Subparts AA–BB [Reserved]

Subpart CC—Scholarships for Students of Exceptional Financial Need

AUTHORITY: Sec. 215 of the Public Health Service Act, 58 Stat. 690, as amended, 63 Stat. 35 (42 U.S.C. 216); sec. 758 of the Public Health Service Act, 90 Stat. 2289, as amended by 102 Stat. 3126–3127 (42 U.S.C. 294z); renumbered as sec. 736, as amended by Pub. L. 102–408, 106 Stat. 2022 (42 U.S.C. 293).

SOURCE: 45 FR 40583, June 16, 1980, unless otherwise noted.

§ 57.2801 To what programs do these regulations apply?

These regulations apply to grants under section 736 of the Public Health Service Act (42 U.S.C. 293) for scholarships for full-time students of exceptional financial need.

[45 FR 40583, June 16, 1980, as amended at 57 FR 45742, Oct. 5, 1992; 61 FR 6127, Feb. 16, 1996]

§ 57.2802 Definitions.

Act means the Public Health Service Act, as amended.

Full-time student means a student enrolled in a school and pursuing a course of study which constitutes a full-time academic workload, as determined by the school, leading to a degree from a health professions school, as specified in section 799(1)(A) of the Act.

Health professions school or *school* means, for this subpart, a public or private nonprofit school of medicine, osteopathic medicine, dentistry, optometry, podiatric medicine, pharmacy, or veterinary medicine providing a course of study, or a portion thereof, as defined in section 799(1)(A) of the Act and as accredited in section 799(1)(E) of the Act.

National of the United States means (1) a citizen of the United States, or (2) a person who, though not a citizen of the United States, owes permanent allegiance to the United States, as defined in the Immigration and Nationality Act, at 8 U.S.C. 1101(a)(22).

Secretary means the Secretary of Health and Human Services and any other officer or employee of the Department to whom the authority involved has been delegated.

State means, in addition to the several States, the District of Columbia, the Commonwealth of Puerto Rico, the Commonwealth of the Northern Mariana Islands, the Virgin Islands, Guam, American Samoa, the Republic of Palau, the Republic of the Marshall Islands, and the Federated States of Micronesia.

[45 FR 40583, June 16, 1980, as amended at 57 FR 45742, Oct. 5, 1992; 61 FR 6127, Feb. 16, 1996]

§ 57.2803 How to apply for a grant.

(a) Any health professions school located in a State may apply for a grant. Each eligible applicant desiring a grant under this subpart shall submit an application in the form and at such time as the Secretary may prescribe.

(b) In addition to other information that the Secretary may require, an application must contain:

(1) A listing of eligible scholarship recipients in order of greatest financial need, indicating resident or nonresident status as well.

(2) The name of the need analysis service used in evaluating the financial status of applicants.

(Approved by the Office of Management and Budget under control number 0915–0028)

[45 FR 40583, June 16, 1980, as amended at 57 FR 45743, Oct. 5, 1992]

§ 57.2804 Students eligible for scholarships.

(a) A scholarship may be awarded only to a student who:

(1) Is a resident of the United States, and either a citizen or national of the United States, an alien lawfully admitted for permanent residence in the United States, a citizen of the Commonwealth of the Northern Mariana Islands, a citizen of the Republic of Palau, a citizen of the Republic of the Marshall Islands, or a citizen of the Federated States of Micronesia.

(2) Has been accepted for enrollment as a full-time student by a health professions school.

(3) Has exceptional financial need as determined under paragraph (b) of this section.

(b)(1) For the purpose of this subpart, a student will have exceptional financial need if the school determines that his or her resources, as described in (b)(2) of this section, do not exceed the lesser of $5,000 or one-half of the cost of attendance at the school.

(2) The school will determine the financial resources of a student by using one of the national need analysis systems or any other procedure approved by the Secretary of Education and other information which the school has regarding the student's financial status. The school must take into account, regardless of the tax status of the student, the expected contribution from parents, spouse, or other family members. Student summer earnings, educational loans, veterans (G.I) benefits and earnings during the school year will not be considered resources for purposes of this subpart.

(3) The school will determine cost of attendance at the school by considering expenses reasonably necessary for the student's attendance at the school, including any special needs and obligations which directly affect the student's ability to attend the school on a full-time basis. The school must document the criteria used for determining these costs.

(c) A recipient of a National Health Service Corps Scholarship, under section 751 of the Act, or an Indian Health Scholarship, under section 757 of the Act, is ineligible for a scholarship under this subpart.

(Approved by the Office of Management and Budget under control number 0915–0028)

[45 FR 40583, June 16, 1980, as amended at 57 FR 45743, Oct. 5, 1992; 61 FR 6127, Feb. 16, 1996]

§ 57.2805 Amount of scholarship award.

A scholarship will consist of:

(a) The tuition of the student in such school year;

(b) The cost of all other reasonable educational expenses including fees, books, and laboratory expenses of the student for the school year; and

(c) A stipend of $400 per month (adjusted in accordance with section 338A(g)(3) of the Act) for 12 consecutive months beginning with the first month of the school year.

[45 FR 40583, June 16, 1980, as amended at 57 FR 45743, Oct. 5, 1992; 61 FR 6127, Feb. 16, 1996]

§ 57.2806 How is the amount of grant award determined?

(a) A school which receives a grant under this subpart must award each scholarship successively to the eligible individual as specified in § 57.2803(b)(1) of greatest financial need at that school.

(b) The Secretary will make a randomized list of all eligible applicant

schools of medicine, dentistry and osteopathic medicine and a second randomized list of all remaining eligible applicant schools. To the extent of available funds, the Secretary will award grant funds sufficient for one scholarship to each eligible applicant school on the first list, and then proceed to the list of all other eligible applicant schools and award one scholarship to each school in the same manner. These scholarships must go to students who have no financial resources for the first year of study at the school, as determined under § 57.2804. The Secretary will then allocate any remaining funds according to paragraph (c) of this section.

(c)(1) Proceeding in sequence through the list of schools of medicine, dentistry and osteopathic medicine, the Secretary will award each school of medicine, dentistry, and osteopathic medicine sufficient grant funds for a second scholarship which must be given to a student with no financial resources as determined under § 57.2804. This procedure will be repeated until all the scholarship requests of the applicant schools of medicine, osteopathic medicine, and dentistry for scholarships for students with no financial resources have been satisfied or until all the available grant funds have been allocated. If there are additional grant funds, the Secretary will then proceed to the list of all other eligible applicant schools and will allocate scholarships for students with no financial resources using the same procedure.

(2) If additional grant funds remain after fulfilling all requests for scholarships for students with no financial resources at all eligible applicant schools, using the method described in paragraph (c)(1) of this section the Secretary will allocate funds for scholarships to students who have resources from one to 500 dollars. With any remaining funds after completion of these awards, the Secretary will, in the same manner, award grants for scholarships to students with resources in increments of $500 until all grant funds are awarded or students who have $5,000 in resources or 50 percent of the cost of education at the school have received awards.

[45 FR 40583, June 16, 1980, as amended at 57 FR 45743, Oct. 5, 1992]

§ 57.2807 For what purposes may grant funds be spent?

(a) A grantee shall only spend funds it receives under this subpart according to the approved application, the authorizing legislation, terms and conditions of the grant award, and these regulations.

(b) The grantee must discontinue all scholarship payments and remit the unused balance of the scholarship to the Federal Government in the event that a recipient ceases to be a full-time student at the school.

§ 57.2808 What additional Department regulations apply to grantees?

Several other regulations apply to these grants. They include, but are not limited to:

42 CFR part 50, subpart D—Public Health Service grant appeals procedure

45 CFR part 16—Procedures of the Departmental Grant Appeals Board

45 CFR part 74—Administration of grants

45 CFR part 76—Governmentwide Debarment and Suspension (nonprocurement) and Governmentwide Requirements for Drug-Free Workplace (Grants).

45 CFR part 80—Nondiscrimination under programs receiving Federal assistance through the Department of Health and Human Services effectuation of title VI of the Civil Rights Act of 1964

45 CFR part 81—Practice and procedure for hearings under part 80 of this title

45 CFR part 83—Regulation for the administration and enforcement of sections 794 and 855 of the Public Health Service Act

45 CFR part 84—Nondiscrimination on the basis of handicap in programs and activities receiving or benefiting from Federal financial assistance

45 CFR part 86—Nondiscrimination on the basis of sex in education programs and activities receiving or benefiting from Federal financial assistance

45 CFR part 91—Nondiscrimination on the basis of age in HHS programs or activities receiving Federal financial assistance

45 CFR part 93—New restrictions on lobbying.

[49 FR 38114, Sept. 27, 1984, as amended at 57 FR 45743, Oct. 5, 1992; 61 FR 6127, Feb. 16, 1996]

§ 57.2809 What other records, audit, and inspection requirements apply to grantees?

(a) Each entity which receives a grant under this subpart must meet the requirements of 45 CFR part 74 concerning audit and inspection.

(b) The grantee must also maintain: (1) A record of all applications for scholarships, and the basis for approving or disapproving each application, including a copy of the total need analysis and determination of resources for each applicant and documentation for any changes made to the need analysis report used by the school; (2) A record of the amount of funds awarded to each recipient.

(Approved by the Office of Management and Budget under control number 0915–0028)

[45 FR 40583, June 16, 1980, as amended at 57 FR 45743, Oct. 5, 1992; 61 FR 6127, Feb. 16, 1996; 61 FR 51020, Sept. 30, 1996]

§ 57.2810 Additional conditions.

The Secretary may impose additional conditions on any grant award before or at the time of an award if he or she determines that these conditions are necessary to assure or protect the advancement of the approved activity, the interest of the public health, or the conservation of grant funds.

Subpart DD—Financial Assistance for Disadvantaged Health Professions Students

AUTHORITY: Sec. 215 of the Public Health Service Act, 58 Stat. 690, as amended by 63 Stat. 35 (42 U.S.C. 216); sec. 787 of the Public Health Service Act, 90 Stat. 2309, as amended by 95 Stat. 923, 99 Stat. 541 (42 U.S.C. 295g–7); renumbered as sec. 740, as amended by Pub. L. 102–408, 106 Stat. 2032–2033 (42 U.S.C. 293d).

SOURCE: 52 FR 18675, May 18, 1987, unless otherwise noted.

§ 57.2901 To what program do these regulations apply?

These regulations apply to grants to eligible schools under section 740(a)(2)(F) and (d) of the Public Health Service Act for financial assistance for disadvantaged health professions students of exceptional financial need.

[52 FR 18675, May 18, 1987, as amended at 61 FR 6128, Feb. 16, 1996]

§ 57.2902 Definitions.

Act means the Public Health Service Act, as amended.

Full-time student means a student enrolled in a school and pursuing a course of study which constitutes a full-time academic workload, as determined by the school, leading to a degree from a school of medicine, school of osteopathic medicine, or school of dentistry, as specified in section 799(1)(A) of the Act.

National of the United States means—

(1) A citizen of the United States; or

(2) A person who, though not a citizen of the United States, owes permanent allegiance to the United States, as defined in the Immigration and Nationality Act, at 8 U.S.C. 1101(a)(22).

School means a public or private nonprofit school of medicine, osteopathic medicine, or dentistry, as defined in section 799(1)(A) of the Act.

School year means the traditional approximately 9-month September to June annual session. For the purpose of computing school year equivalents for students who, during a 12-month period, attend for a longer period than the traditional school year, the school year will be considered to be 9 months in length.

Secretary means the Secretary of Health and Human Services and any other officer or employee of the Department to whom the authority involved has been delegated.

State means, in addition to the several States, the District of Columbia, the Commonwealth of Puerto Rico, the Commonwealth of the Northern Mariana Islands, the Virgin Islands, Guam, American Samoa, the Republic of Palau, the Republic of the Marshall Islands, and the Federated States of Micronesia.

[52 FR 18675, May 18, 1987, as amended at 57 FR 45743, Oct. 5, 1992; 61 FR 6128, Feb. 16, 1996]

§ 57.2903 How to apply for a grant.

(a) Any school located in a State may apply for a grant. Each school seeking a grant must submit an application at the time and in the form and manner that the Secretary may require. The

application must be signed by an individual authorized to act for the applicant and to assume on behalf of the applicant the obligations imposed by the statute, the regulations of this subpart, and the terms and conditions of the award.

(b) Each application will be reviewed to determine eligibility and the reasonableness of the amount of Federal support requested. The Secretary may require the applicant to submit additional data for this purpose.

§ 57.2904 Eligibility and selection of aid recipients.

(a) *Determination of eligibility*. An individual is eligible for consideration for financial assistance under this program if he or she:

(1) Is a resident of the United States and either a citizen or national of the United States, an alien lawfully admitted for permanent residence in the United States, a citizen of the Commonwealth of the Northern Mariana Islands, a citizen of the Republic of Palau, a citizen of the Republic of the Marshall Islands, or a citizen of the Federated States of Micronesia.

(2) Is enrolled or has been accepted for enrollment as a full-time student at a school;

(3) Comes from a disadvantaged background. For purposes of this program, an individual from a disadvantaged background is one who—

(i) Comes from an environment that has inhibited the individual from obtaining the knowledge, skills, and abilities required to enroll in and graduate from a school; or

(ii) Comes from a family with an annual income below a level based on low income thresholds according to family size published by the U.S. Bureau of the Census, adjusted annually for changes in the Consumer Price Index, and adjusted by the Secretary for use in all health professions programs. The Secretary will periodically publish these income levels in the FEDERAL REGISTER; and

(4) Has exceptional financial need. For purposes of this program, a student will have exceptional financial need if the school determines that the student's resources, as described in paragraph (b)(1) of this section, do not exceed the lesser of $5,000 or one-half of the cost of attendance at the school. Student summer earnings, educational loans, veterans (G.I.) benefits, and earnings during the school year will not be considered resources for purposes of determining whether a student has exceptional financial need.

(b) *Selection of aid recipients.* The school will select qualified recipients and determine the amount of aid to be awarded to provide its needy students with the maximum possible benefit.

(1) In determining the amount of aid an eligible student needs to pursue a full-time course of study at the school, the school will take into consideration:

(i) The financial resources available to the student by using one of the national need analysis systems or any other procedure approved by the Secretary of Education in combination with other information which the school has regarding the student's financial status. The school must take into account, regardless of the tax status of the student, the expected contribution from parents, spouse, self, or (as appropriate) other family members. In making this determination, the school must consider photocopies of the parents', student's, and spouse's Federal income tax forms with original signatures for the most recent tax year (or certification that no Federal income tax return was filed and documentation of the total income for the most recent tax year), and may require tax returns that are certified as having been received by the Internal Revenue Service (IRS); and

(ii) The costs reasonably necessary for the student's attendance at the school. The school must document the criteria used for determining these costs. This documentation must include resource materials used by the school to determine the dollar amount for each category of expenses in its standard student budgets.

(2) The school must select aid recipients in order of greatest need, as determined by the school. The school may consider other scholarship, grant, or

fellowship funds that a student has received or will receive for the award period when determining the order of greatest need.

(Approved by the Office of Management and Budget under control number 0915–0028)

[52 FR 18675, May 18, 1987, as amended at 57 FR 45743, Oct. 5, 1992; 61 FR 6128, Feb. 16, 1996]

§ 57.2905 Amount of student award.

(a) The total award made under this program to any student, plus all other sources of aid the student has received or will receive for the award period, may not exceed the amount the school determines that the student needs to meet the costs of education (i.e., tuition, fees, books, equipment, other expenses required by the school, and reasonable living expenses) for the period covered by the award. The total award made under this program to any student may be less than the amount the school determines that the student needs to meet the costs of education for the period covered by the award.

(b) The total award made under this program to any student for a school year may not exceed $10,000. The maximum amount awarded during a 12-month period to any student enrolled in a school which provides a full-time course of study longer than the traditional 9-month school year may be proportionately increased.

(c) The school must disburse this award to the student in payments based on the student's need during each academic period (e.g. semester, quarter, trimester) of a school year.

§ 57.2906 How is the amount of the grant award determined?

(a) The amount of the grant to each eligible school will be the amount requested in its application, except that if the total of the amounts requested for any fiscal year by all schools for these funds exceeds the amount of Federal funds determined by the Secretary at the time of payment to be available for this purpose, the grant to each school will be reduced to whichever is smaller:

(1) The amount requested in the application; or

(2) An amount which bears the same ratio to the total amount of Federal funds determined by the Secretary at the time of grant award to be available for that fiscal year for this program as the number of eligible students at the school bears to the total number of eligible students at all participating schools during that year.

(b) Amounts remaining after the calculation described in paragraph (a) will be distributed in accordance with paragraph (a)(2) of this section among schools whose applications requested more than the amount paid to them, but with whatever adjustments may be necessary to prevent the total grant to any school from exceeding the amount requested by it.

§ 57.2907 For what purposes may grant funds be spent?

(a) A school shall only spend funds it receives under this subpart in accordance with the approved application, the authorizing legislation, terms and conditions of the grant award, and these regulations.

(b) The school must discontinue all payments to a recipient in the event that the recipient ceases to be a full-time student at the school, and must remit any unused balance of funds to the Federal Government in the event it is unable to make full use of its grant award during the award period.

§ 57.2908 What additional Department regulations apply to grants?

Several other regulations apply to these grants. They include, but are not limited to, the following:

42 CFR part 50, subpart D—Public Health Service Grant Appeals Procedure

45 CFR part 16—Procedures of the Departmental Grant Appeals Board

45 CFR part 74—Administration of Grants

45 CFR part 76—Governmentwide Debarment and Suspension (nonprocurement) and Governmentwide Requirements for Drug-Free Workplace (Grants).

45 CFR part 80—Nondiscrimination Under Programs Receiving Federal Assistance Through the Department of Health and Human Services Effectuation of title VI of the Civil Rights Act of 1964

45 CFR part 81—Practice and Procedure for Hearings Under part 80 of this title

45 CFR part 83—Regulation for the Administration and Enforcement of sections 794 and 855 of the Public Health Service Act

45 CFR part 84—Nondiscrimination on the Basis of Handicap in Programs and Activities Receiving or Benefiting From Federal Financial Assistance
45 CFR part 86—Nondiscrimination on the Basis of Sex in Education Programs and Activities Receiving or Benefiting From Federal Financial Assistance
45 CFR part 91—Nondiscrimination on the Basis of Age in HHS Programs or Activities Receiving Federal Financial Assistance
45 CFR part 93—New restrictions on lobbying.

[52 FR 18675, May 18, 1992, as amended at 57 FR 45743, Oct. 5, 1992; 61 FR 6128, Feb. 16, 1996]

§ 57.2909 What other records, audit, and inspection requirements apply to schools?

(a) Each entity which receives a grant under this subpart must meet the requirements of 45 CFR part 74 concerning audit and inspection.

(b) The school must also maintain the following records in computer, electronic, microfiche, microfilm, or paper form:

(1) A record of all recipients of aid under this program which includes, for each recipient, a copy of the total need analysis and determination of resources, documentation for any changes made to the need analysis report used by the school, documentation that the recipient met the eligibility requirements, a copy of the student budget used to determine the recipient's costs of attendance, and documentation of other sources of aid received by the recipient;

(2) A record of the amount of funds awarded to each recipient; and

(3) A record of each institutional application for funding, including documentation to support the number of eligible students listed on each application and how they met the eligibility criteria.

(c) Institutional officials who have information which indicates the potential or actual commission of fraud or other offenses against the United States, involving these funds, should promptly provide this information to the appropriate Regional Office of Inspector General for Investigations.

(Approved by the Office of Management and Budget under control number 0915–0028)

[52 FR 18675, May 18, 1987, as amended at 61 FR 6128, Feb. 16, 1996; 61 FR 51020, Sept. 30, 1996]

§ 57.2910 Additional conditions.

The Secretary may impose additional conditions on any grant award before or at the time of an award if he or she determines that these conditions are necessary to assure or protect the advancement of the approved activity, the interest of the public health, or the conservation of grant funds.

Subpart EE—Grants for Residency Training in Preventive Medicine

AUTHORITY: Sec. 793 of the Public Health Service Act, 95 Stat. 928 (42 U.S.C. 295h–1c); redesignated as section 788(c) of the Public Health Service Act, 102 Stat. 3134–3135 (42 U.S.C. 295g–8(e)); renumbered as sec. 763, as amended by Pub. L. 102–408, 106 Stat. 2047 (42 U.S.C. 294b).

§ 57.3001 To what programs do these regulations apply?

These regulations apply to the award of grants under section 763 of the Public Health Service Act (42 U.S.C. 294b) to schools of medicine, osteopathic medicine and public health to meet the costs of projects to (a) plan and develop new approved residency training programs and to maintain or improve existing approved residency training programs in preventive medicine and (b) provide financial assistance to residency trainees enrolled in such programs.

[51 FR 11031, Apr. 1, 1986, as amended at 57 FR 45743, Oct. 5, 1992; 61 FR 6128, Feb. 16, 1996]

§ 57.3002 Definitions.

Academic year means course work sufficient to satisfy the requirements for the Master of Public Health degree or its equivalent which is required by all approved residency programs. In the usual situation, this course work is taken during a single year.

Act means the Public Health Service Act, as amended.

Approved residency training program means the entirety or that part of a residency training program in preventive medicine which is fully or provisionally accredited by the Accreditation Council for Graduate Medical Education or approved by the American Osteopathic Association.

Clinical year means postgraduate training which provides experience in direct patient care including ambulatory and inpatient experience. The one year of required training can be provided in an accredited program in one of the recognized clinical specialties or through clinical training sponsored by a preventive medicine residency training program. The clinical year is generally a prerequisite for the preventive medicine residency training program or the first year of such program.

Field year means specialized instruction and supervised experience in the resident's selected area of emphasis, and is usually one year in duration. The field year is usually the last year of the preventive medicine residency training program and is generally conducted at a site remote from that of such program.

Fields of Preventive Medicine means the following group of basic components common to all preventive medicine specialties (a) biostatistics, (b) epidemiology, (c) administration of health and medical programs, (d) environmental hazards to health, (e) social, cultural and behavorial factors in medicine, and (f) the application of preventive principles in clinical practice.

Full-time faculty means an individual or individuals who are employed as faculty of a school of medicine, osteopathic medicine or public health on a full-time basis as defined by the general policies of the applicant institution.

Nonprofit refers to the status of an entity which is a corporation or association, or is owned and operated by one or more corporations or associations, no part of the net earnings of which inures, or may lawfully inure, to the benefit of any private shareholder or individual.

Preventive Medicine is a specialized area of medical practice composed of distinct disciplines which use skills focusing on the health of defined populations in order to promote and maintain health and well-being and prevent disease, disability, and premature death. The specialties of preventive medicine are: General preventive medicine, public health, occupational health, and aerospace medicine.

Program Director means an individual appointed by the grantee institution to direct and supervise the residency training program who is certified or otherwise qualified as required by the Accreditation Council for Graduate Medical Education.

Secretary means the Secretary of Health and Human Services, and any other officer or employee of the Department of Health and Human Services to whom the authority involved has been delegated.

State means, in addition to the several States, the District of Columbia, the Commonwealth of Puerto Rico, the Commonwealth of the Northern Mariana Islands, the Virgin Islands, Guam, American Samoa, the Republic of Palau, the Republic of the Marshall Islands, and the Federated States of Micronesia.

[51 FR 11031, Apr. 1, 1986, as amended at 57 FR 45743, Oct. 5, 1992; 61 FR 6128, Feb. 16, 1996]

§ 57.3003 Who is eligible to apply for a grant?

Accredited public or private nonprofit schools of medicine, osteopathic medicine or public health located in a State are eligible to apply for a grant. Each eligible applicant desiring a grant under this subpart shall submit an application at the time and in such a form that the Secretary may prescribe. To be eligible for a grant, an applicant must demonstrate that it has, or will have by the end of 1 year of grant support, full-time faculty with training and experience in the fields of preventive medicine and support from other faculty members trained in public health and other relevant specialties and disciplines.

(Approved by the Office of Management and Budget under control number 0915–0060)

[57 FR 45743, Oct. 5, 1992]

§ 57.3004 Project requirements.

A project supported under this subpart must be conducted in accordance with the following requirements:

(a) Each project must have a project director who works at the grantee institution on an appointment consistent with other major departments, heads or will head the unit, and has relevant training and experience in preventive medicine.

(b) Each project must have an appropriate administrative and organizational plan and appropriate staff and facility resources for the achievement of stated objectives.

(c) Each project must systematically evaluate the educational program, including the performance and competence of trainees and faculty, the administration of the program, and the degree to which program and educational objectives are met.

(d) All field experiences must be supervised by a qualified faculty member.

(e) All applicants must either demonstrate an increase in minority and disadvantaged residents or show evidence of efforts to recruit minority and disadvantaged residents.

(Approved by the Office of Management and Budget under control number 0915—0060)

[51 FR 11031, Apr. 1, 1986, as amended at 57 FR 45744, Oct. 5, 1992]

§ 57.3005 How will applications be evaluated?

(a) As required by section 798(a) of the Act, each application for a grant under this subpart shall be submitted to a peer review group, composed principally of non-Federal experts, for an evaluation of the merits of the proposals made in the application. The Secretary may not approve such an application unless a peer review group has recommended the application for approval. The Secretary will decide which applications to approve by considering, among other factors:

(1) The potential effectiveness of the proposed project in carrying out the training purposes of section 763 of the PHS Act;

(2) The extent of responsiveness to the project requirements described in § 57.3004;

(3) The administrative and management capability of the applicant to carry out the proposed project in a cost-effective manner;

(4) The degree to which the proposed training program emphasizes health promotion and disease prevention;

(5) The degree to which the applicant demonstrates institutional commitment to the proposed program; and

(6) The history of the program including number of residents who successfully completed the program.

(b) In determining the funding of applications approved under paragraph (a) of this section, the Secretary will consider any special factors relating to national needs as the Secretary may from time to time announce in the FEDERAL REGISTER.

[51 FR 11031, Apr. 1, 1986, as amended at 53 FR 14792, Apr. 26, 1988; 57 FR 45744, Oct. 5, 1992; 61 FR 6128, Feb. 16, 1996]

§ 57.3006 How long does grant support last?

(a) The notice of grant award specifies the length of time the Secretary intends to support the project without requiring the project to recompete for funds. This period, called the project period, will not exceed 3 years.

(b) Generally, the grant will initially be funded for 1 year, and subsequent continuation awards will also be for 1 year at a time. Decisions regarding continuation awards and the funding levels of these awards will be made after consideration of such factors as the grantee's progress and management practices, existence of legislative authority, and the availability of funds. In all cases, continuation awards require a determination by the Secretary that continued funding is in the best interest of the Federal Government.

(c) Neither the approval of any application nor the award of any grant shall commit or obligate the United States in any way to make any additional, supplemental, continuation or other award with respect to any approved application or portion of any approved application. For continuation support,

grantees must make separate application at such times and in such a form as the Secretary may prescribe.

[51 FR 11031, Apr. 1, 1986, as amended at 57 FR 45744, Oct. 5, 1992]

§ 57.3007 How is the amount of the grant award determined?

(a) The amount of any award will be limited to that portion of the annual program costs which the Secretary determines, on the basis of the documentation required in the application, cannot reasonably be paid from other available funds. Moreover, the amount of any stipend will be limited to that portion of the annual amount normally paid to other residents by the applicant which the Secretary determines, on the basis of the documentation required in the application, cannot reasonably be paid from other available funds. The applicant must document attempts to pursue other sources of funding.

(b) Stipend support may only be given to residents in the academic and field years of training, and support to each resident is limited to 2 years of training, excluding the clinical year.

(Approved by the Office of Management and Budget under control number 0915–0060)

[51 FR 11031, Apr. 1, 1986, as amended at 57 FR 45744, Oct. 5, 1992]

§ 57.3008 For what purposes may grant funds be spent?

(a) A grantee shall only spend funds it receives under this subpart according to the approved application and budget, the authorizing legislation, terms and conditions of the grant award, applicable cost principles specified in subpart Q of 45 CFR part 74, and these regulations.

(b) Grantees may not spend grant funds for sectarian instruction or for any religious purpose.

(c) Any balance of federally obligated grant funds remaining unobligated by the grantee at the end of a budget period may be carried forward provided specific approval is granted by the Secretary. If at any time during a budget period it becomes apparent to the Secretary that the amount of Federal funds awarded and available to the grantee for that period, including any unobligated balance carried forward from prior periods, exceeds the grantee's needs for the period, the Secretary may adjust the amounts awarded by withdrawing the excess. A budget period is an interval of time (usually 12 months) into which the project period is divided for funding and reporting purposes.

[51 FR 11031, Apr. 1, 1986, as amended at 57 FR 45744, Oct. 5, 1992]

§ 57.3009 What additional Department regulations apply to grantees?

Several other regulations apply to grants under this subpart. These include, but are not limited to:

42 CFR part 50, subpart D—Public Health Service grant appeals procedure

45 CFR part 16—Procedures of the Departmental Grant Appeals Board

45 CFR part 46—Protection of human subjects

45 CFR part 74—Administration of grants

45 CFR part 75—Informal grant appeals procedures

45 CFR part 76—Governmentwide Debarment and Suspension (nonprocurement) and Governmentwide Requirements for Drug-Free Workplace (Grants)

45 CFR part 80—Nondiscrimination under programs receiving Federal assistance through the Department of Health and Human Services effectuation of title VI of the Civil Rights Act of 1964

45 CFR part 81—Practice and procedure for hearings under part 80 of this title

45 CFR part 83—Regulation for the administration and enforcement of sections 794 and 855 of the Public Health Service Act

45 CFR part 84—Nondiscrimination on the basis of handicap in programs and activities receiving or benefiting from Federal financial assistance

45 CFR part 86—Nondiscrimination on the basis of sex in education programs and activities receiving or benefiting from Federal financial assistance

45 CFR part 91—Nondiscrimination on the basis of age in HHS programs or activities receiving Federal financial assistance

45 CFR part 93—New restrictions on lobbying.

[51 FR 11031, Apr. 1, 1986, as amended at 57 FR 45744, Oct. 5, 1992; 61 FR 6128, Feb. 16, 1996]

§ 57.3010 What other audit and inspection requirements apply to grantees?

Each entity which receives a grant under this subpart must meet the requirements of 45 CFR part 74 concerning audit and inspection.

[61 FR 6128, Feb. 16, 1996; 61 FR 51020, Sept. 30, 1996]

§ 57.3011 Additional conditions.

The Secretary may impose additional conditions in the grant award before or at the time of the award if he or she determines that these conditions are necessary to assure or protect the advancement of the approved activity, the interest of the public health, or the conservation of grant funds.

[51 FR 11031, Apr. 1, 1986]

Subpart FF—Grants for Residency Training and Faculty Development in General Internal Medicine and/or General Pediatrics

AUTHORITY: Sec. 215 of the Public Health Service Act, 58 Stat. 690, 63 Stat. 35 (42 U.S.C. 216); sec. 784 of the Public Health Service Act, 90 Stat. 2315, as amended by 95 Stat. 922–923 and 99 Stat. 540 (42 U.S.C. 295g–4); renumbered as sec. 748, as amended by Pub. L. 102–408, 106 Stat. 2043 (42 U.S.C. 293l).

§ 57.3101 To what projects do these regulations apply?

The regulations of this subpart apply to grants to schools of medicine and osteopathic medicine and public or private nonprofit hospitals and other public or private nonprofit entities under section 748 of the Public Health Service Act (42 U.S.C. 293l) to assist in meeting the cost of projects—

(a) To plan, develop and operate approved residency training programs in internal medicine and/or pediatrics which emphasize the training of residents for the practice of general internal medicine and/or general pediatrics;

(b) To provide financial assistance (in the form of traineeships and fellowships) to residents who are participants in this type of program, and who plan to practice general internal medicine and/or general pediatrics;

(c) To plan, develop and operate a program for the training of physicians who plan to teach in a general internal medicine and/or general pediatrics training program; and

(d) To provide financial assistance (in the form of traineeships or fellowships) to physicians who are participants in any such program and who plan to teach in a general internal medicine and/or general pediatrics training program.

[53 FR 50408, Dec. 15, 1988, as amended at 57 FR 45744, Oct. 5, 1992; 61 FR 6128, Feb. 16, 1996]

§ 57.3102 Definitions.

For purposes of this subpart:

Act means the Public Health Service Act, as amended.

Approved residency training program or *program* is the entirety or that part of a residency training program which is fully or provisionally accredited by the Accreditation Council for Graduate Medical Education or approved by the American Osteopathic Association and which emphasizes the training of residents for the practice of general internal medicine or general pediatrics.

Faculty development program means a systematic training program to increase faculty competence in teaching skills and in other areas related to academic responsibility.

Health professional shortage area means an area designated under section 332 of the Act.

Nonprofit refers to the status of an entity which is a corporation or association, or is owned and operated by one or more corporations or associations, no part of the net earnings of which inures, or may lawfully inure, to the benefit of any private shareholder or individual.

Nurse practitioner means a nurse practitioner as defined in 42 CFR 57.2402.

Practice of general internal medicine or general pediatrics means a practice which is limited to adult or child and adolescent medicine respectively, and in which the physician:

(1) Serves as physician of first contact with the patient and provides a timely means of entry into the health care system;

(2) Evaluates the patient's health needs, provides personal health care

and refers the patient, if indicated, to appropriate sources of health care while preserving the continuity of care;

(3) Assumes with the patient responsibility for the patient's longitudinal and comprehensive (including preventive and psychosocial) health care and acts as coordinator of the provision of health services to the patient;

(4) Considers the patient's health care within the context of his or her environment including the community and family or comparable social units; and

(5) Where applicable, plans and shares the above functions with other physicians.

Project director means a fully licensed physician on the faculty of the grantee, designated by the grantee in the grant application and approved by the Secretary to direct the project being supported under this subpart.

School of medicine and osteopathic medicine means a public or private nonprofit school which provides training leading respectively to a degree of doctor of medicine or to a degree of doctor of osteopathic medicine and which is accredited as provided in section 799(1)(E) of the Act.

Secretary means the Secretary of Health and Human Services and any other officer or employee of the Department to whom the authority involved has been delegated.

State means, in addition to the several States, the District of Columbia, the Commonwealth of Puerto Rico, the Commonwealth of the Northern Mariana Islands, the Virgin Islands, Guam, American Samoa, the Republic of Palau, the Republic of the Marshall Islands, and the Federated States of Micronesia.

Trainee means an allopathic or osteopathic general internist or general pediatrician participating in a faculty development training program supported by a grant under section 748 and receiving stipend support for such grant.

[45 FR 51202, Aug. 1, 1980, as amended at 49 FR 6906, Feb. 24, 1984; 53 FR 50408, Dec. 15, 1988; 57 FR 45744, Oct. 5, 1992; 61 FR 6128, Feb. 16, 1996]

§ 57.3103 Who is eligible to apply for a grant?

Any school of medicine or osteophathic medicine, public or private nonprofit hospital or any other public or private nonprofit entity, located in a State, may apply for a grant under this subpart. Each eligible applicant desiring a grant under this subpart shall submit an application in the form and at such time as the Secretary may prescribe.

[57 FR 45744, Oct. 5, 1992]

§ 57.3104 What activities must be addressed in an application?

In addition to other pertinent information which the Secretary may require, an application for a grant under this subpart must contain the following:

(a) A proposal for a project to plan, develop, and operate an approved residency training or faculty development program in internal medicine and/or pediatrics—

(1) Which emphasizes the training of residents for the practice of general internal medicine and/or general pediatrics and faculty for teaching in such programs, and

(2) Which may provide financial assistance to residents and trainees who are participants in the programs and who plan to practice or teach in general internal medicine and/or general pediatrics.

(b) A full and adequate description of the proposed project and of the manner in which the applicant intends to conduct the project and carry out the requirements of this subpart.

(c) A description of the resources to be used by the applicant for the conduct of the proposed project, including faculty, staff, equipment, facilities, and appropriate clinical practice settings (including those which are used to meet the requirements of § 57.3105(j) and (l)).

(d) In programs other than faculty development, a description of the type and amount of training to be offered to residents in each year of each residency program in accordance with the requirements of § 57.3105 with special attention to the requirements of § 57.3105(a)(11).

(e) In programs other than faculty development, the number of residents to be enrolled in each program, at each level of training, for each year of the project period.

(f) A detailed budget for the proposed project and a justification of the amount of grant funds requested.

(g) Documentation showing that funds available from other sources will be insufficient to meet the costs of the project and that grant funds will not be used to supplant other available funds.

(h) If stipend support is requested by an applicant to provide a portion of the salary of residents enrolled in the program, documentation showing that income available from alternative sources, including income derived from the services of the residents in the program, will be insufficient to pay their salaries and that grant funds will not be used to supplant other available funds. Stipend support requested for trainees in the faculty development program must be paid in accordance with established Public Health Service postdoctoral stipend levels.

(Approved by the Office of Management and Budget under control number 0915–0060)

[45 FR 51202, Aug. 1, 1980, as amended at 49 FR 6906, Feb. 24, 1984; 53 FR 50408, Dec. 15, 1988]

§ 57.3105 Project requirements.

(a) For each residency program, a project must:

(1) Have a residency program director.

(2) Employ an individual with relevant experience or training who is responsible for curriculum development and evaluation.

(3) Employ faculty members experienced in the practice of general internal medicine and/or general pediatrics who participate as instructors at principal training settings.

(4) Employ individual(s) with formal education in behavioral sciences who participate in the preparation and implementation of the curriculum and in clinical consultation.

(5) Use a resident recruitment and selection process which assures that residents in the program have applied specifically for training in a program that emphasizes the practice of general internal medicine and/or general pediatrics.

(6) Provide financial assistance from grant funds only to residents who have signed statements of their intention to specialize or work in the practice of general internal medicine and/or general pediatrics.

(7) Have, in each program of a school of medicine, at least four residents in training by the beginning of the second year of Federal support, and at least 12 residents in training by the beginning of the fourth year of Federal support. By the beginning of the fourth year of Federal support, a program may meet this requirement with less than 12 residents in training if the number of internal medicine or pediatric residents in primary care training is at least 50 percent of the total number of internal medicine or pediatric residents at the institution. The Secretary may suspend this requirement for a period which he or she finds appropriate if the Secretary determines that a grantee has made a good faith effort to comply with the requirement and has met the other requirements of this Subpart and the Act, but is unable to have the required number of residents in the program due to circumstances beyond its control.

(8) Have, in each program of a school of osteopathic medicine, at least two residents in training by the beginning of the second year of Federal support; and at least six residents in training in 3-year programs and at least four residents in training in 2-year programs by the beginning of the fourth year of Federal support. The Secretary may suspend any of these requirements for a period which he or she finds appropriate if the Secretary determines a grantee has made a good faith effort to comply with the requirement and has met the other requirements of this Subpart and the Act, but is unable to have the required number of residents in the program due to circumstances beyond its control.

(9) Plan to have residents distributed so that there is no decrease in numbers of residents in successive levels of training by the time the program is fully operational.

(10) Use one or more ambulatory care training settings which actively promote the practice of general internal medicine and/or general pediatrics, and which:

(i) Attract patients for primarily longitudinal and comprehensive (including psychosocial and preventive) health care;

(ii) Organize personnel, including residents, into functional units providing comprehensive health services and provide residents with experience working with various types of health personnel;

(iii) Have systems for referring patients to other specialists, and subspecialists, which assure coordination with the patients' own practitioners of general internal medicine and/or general pediatrics;

(iv) Use an appointment system which facilitates the assignment of patients to their practitioner of general internal medicine and/or general pediatrics or to a particluar team of practitioners; and

(v) Use a medical record system which:

(A) Gives practitioners of general internal medicine and/or general pediatrics ready access to a patient's medical records including data relating to members of the patient's family which is pertinent to the patient's care;

(B) Is suitable for audit by organizations or individuals who perform this work with adequate safeguards against unauthorized disclosures; and

(C) Assures systematic review of the records.

(11) Make provision for each resident to serve a panel of patients and/or families who recognize him or her as their provider of longitudinal and comprehensive (including preventive and psychosocial) health care. The panel must be sufficiently numerous and varied to provide the resident with broad clinical experience. The clinical experience must be scheduled principally in ambulatory care settings as described in paragraph (a)(10) of this section.

(12) Offer ambulatory care training relevant to general internal medicine and/or general pediatrics in settings such as emergency rooms and specialty clinics.

(13) Have a planned curriculum which:

(i) Supplements the residents' inpatient and ambulatory patient care experiences with related educational activities such as courses, presentations, discussions, and reading assignments;

(ii) Emphasizes subjects pertaining to:

(A) Ambulatory care;

(B) Psychosocial skills and topics; and

(C) Non-clinical areas relevant to the practitioner of general internal medicine and/or general pediatrics; and

(iii) Is annually evaluated, using previously established criteria and objectives in a manner which includes the participation of residents.

(14) Develop and use systematic procedures to assess the individual resident's needs and to assist in educational planning and evaluation of the resident's competence.

(b) For each faculty development program, a project must:

(1) Have a project director who is employed by the grantee or training institution, has relevant training and experience, and has been approved by the Secretary to direct the project;

(2) Have an appropriate administrative and organizational plan and appropriate faculty, staff and facility resources to achieve the stated objectives;

(3) Have a curriculum which:

(i) Directly applies to general internal medicine and/or general pediatrics,

(ii) Emphasizes improvement of pedagogical skills and techniques for clinical teaching in classroom and ambulatory health care settings, and

(iii) Uses structured didactic and experiential teaching strategies.

(iv) With respect to training programs of 9 or more months duration, the curriculum must also include:

(A) A research component, with a research project to be completed by each trainee, and

(B) An administrative component which addresses the non-teaching roles and functions of faculty;

(4) Systematically evaluate the educational program, including trainees and faculty, the administration of the program, and the degree to which the

program and educational objectives are met;

(5) Have as trainees only physicians who teach or plan teaching careers in general internal medicine and/or general pediatrics;

(6) To be eligible for stipend support from grant funds, a trainee must:

(i) Be a general internist or a general pediatrician,

(ii) Intend to teach in a general internal medicine and/or general pediatrics program on a full-time basis,

(iii) Be a full-time participant in the training project for at least 3 months, and

(iv) Receive less than full institutional salary during the period of Federal support of stipends; and

(7) Stipend support from grant funds may be no longer than 24 cumulative months for any trainee.

[45 FR 51202, Aug. 1, 1980, as amended at 49 FR 6906, Feb. 24, 1984; 53 FR 50409, Dec. 15, 1988; 54 FR 51745, Dec. 18, 1989; 57 FR 45744, Oct. 5, 1992]

§ 57.3106 How will applications be evaluated?

(a) As required by section 798(a) of the Act, each application for a grant under this subpart shall be submitted to a peer review group, composed principally of non-Federal experts, for an evaluation of the merits of the proposals made in the application. The Secretary may not approve such an application unless a peer review group has recommended the application for approval. The Secretary will award grants to applicants whose projects best promote the purposes of section 748 of the Act. The Secretary will take into consideration, among other factors:

(1) The degree to which the proposed project adequately provides for the project requirements set forth in § 57.3105;

(2) The administrative and management capability of the applicant to carry out the proposed project in a cost-effective manner;

(3) The qualifications of the proposed staff and faculty;

(4) The potential of the project to continue on a self-sustaining basis; and

(5) For faculty development programs, the applicant must demonstrate the institution's commitment to general internal medicine and/or general pediatrics as defined under § 57.3102.

(b) In determining the funding of applications approved under paragraph (a) of this section, the Secretary shall give priority to applicants that demonstrate a commitment to general internal medicine and general pediatrics in their medical education training programs. However, should specific needs warrant, the Secretary will consider any other special factors relating to national needs as the Secretary may from time to time announce in the FEDERAL REGISTER.

[45 FR 51202, Aug. 1, 1980, as amended at 53 FR 14792, Apr. 26, 1988; 53 FR 50409, Dec. 15, 1988; 61 FR 6128, Feb. 16, 1996]

§ 57.3107 How long does grant support last?

(a) The notice of grant award specifies the length of time the Secretary intends to support the project without requiring the project to recompete for funds. This period, called the project period, will not exceed 5 years.

(b) Generally, the grant will initially be funded for 1 year, and subsequent continuation awards will also be for 1 year at a time. Decisions regarding continuation awards and the funding levels of these awards will be made after consideration of such factors as the grantee's progress and management practices, and the availability of funds. In all cases, continuation awards require a determination by the Secretary that continued funding is in the best interest of the Federal Government.

(c) Neither the approval of any application nor the award of any grant shall commit or obligate the United States in any way to make any additional, supplemental, continuation or other award with respect to any approved application or portion of an approved application. For continuation support, grantees must make separate application at such times and in such a form as the Secretary may prescribe.

[45 FR 51202, Aug. 1, 1980, as amended at 53 FR 50409, Dec. 15, 1988; 57 FR 45744, Oct. 5, 1992]

§ 57.3108 How is the amount of the grant award determined?

The amount of any award will be limited to that portion of the annual program costs which the Secretary determines, on the basis of the documentation required in the application, cannot reasonably be paid from other available funds. Further, the amount of any stipend will be limited to that portion of the annual amount normally paid to other residents by the applicant which the Secretary determines, on the basis of the documentation required in the application, cannot reasonably be paid from other available funds, including the incomes derived by the hospital from the residents' services.

[45 FR 51202, Aug. 1, 1980]

§ 57.3109 For what purposes may grant funds be spent?

(a) A grantee shall only spend funds it receives under this subpart according to the approved application and budget, the authorizing legislation, terms and conditions of the grant award, applicable cost principles specified in subpart Q of 45 CFR part 74, and these regulations.

(b) Grantees may not spend grant funds for sectarian instruction or for any religious purpose.

(c) Any balance of federally obligated grant funds remaining unobligated by the grantee at the end of a budget period may be carried forward provided specific approval is granted by the Secretary. If at any time during a budget period it becomes apparent to the Secretary that the amount of Federal funds provided and made available to the grantee for that period, including any unobligated balance carried forward from prior periods, exceeds the grantee's needs for the period, the Secretary may adjust the amounts provided by withdrawing the excess. A budget period is an interval of time (usually 12 months) into which the project period is divided for funding and reporting purposes.

[45 FR 51202, Aug. 1, 1980, as amended at 53 FR 50409, Dec. 15, 1988; 57 FR 45745, Oct. 5, 1992]

§ 57.3110 What additional Department regulations apply to grantees?

Several other regulations apply to grants under this subpart. These include, but are not limited to:

42 CFR part 50, subpart D—Public Health Service grant appeals procedure
45 CFR part 16—Procedures of the Departmental Grant Appeals Board
45 CFR part 46—Protection of human subjects
45 CFR part 74—Administration of grants
45 CFR part 75—Informal grant appeals procedures
45 CFR part 76—Governmentwide Debarment and Suspension (nonprocurement) and Governmentwide Requirements for Drug-Free Workplace (Grants)
45 CFR part 80—Nondiscrimination under programs receiving Federal assistance through the Department of Health and Human Services effectuation of title VI of the Civil Rights Act of 1964
45 CFR part 81—Practice and procedure for hearings under part 80 of this title
45 CFR part 83—Regulation for the administration and enforcement of sections 794 and 855 of the Public Health Service Act
45 CFR part 84—Nondiscrimination on the basis of handicap in programs and activities receiving or benefiting from Federal financial assistance
45 CFR part 86—Nondiscrimination on the basis of sex in education programs and activities receiving or benefiting from Federal financial assistance
45 CFR part 91—Nondiscrimination on the basis of age in HHS programs or activities receiving Federal financial assistance
45 CFR part 93—New restrictions on lobbying.

[49 FR 38115, Sept. 27, 1984, as amended at 57 FR 45745, Oct. 5, 1992; 61 FR 6129, Feb. 16, 1996]

§ 57.3111 What other audit and inspection requirements apply to grantees?

Each entity which receives a grant under this subpart must meet the requirements of 45 CFR part 74 concerning audit and inspection.

[61 FR 6129, Feb. 16, 1996; 61 FR 51020, Sept. 30, 1996]

§ 57.3112 Additional conditions.

The Secretary may impose additional conditions in the grant award before or at the time of the award if he or she determines that these conditions are necessary to assure or protect the advancement of the approved activity,

the interest of the public health, or the conservation of grant funds.

[45 FR 51202, Aug. 1, 1980]

Subpart GG—Payment for Tuition and Other Educational Costs

AUTHORITY: Sec. 215, Public Health Service Act, 58 Stat. 690, as amended by 63 Stat. 35 (42 U.S.C. 216); sec. 711, Public Health Service Act, 90 Stat. 2253; section 710, PHS Act, as redesignated by Pub. L. 97–35, 95 Stat. 915 (42 U.S.C. 292k).

§ 57.3201 To which programs do these regulations apply?

The regulations in this subpart establish the criteria to be used in determining allowable increases in tuition and other educational costs for which the Secretary is responsible for payment under the following sections of the Public Health Service Act: The National Health Service Corps Scholarship Program (sec. 338A) (42 U.S.C. 254l) and the Indian Health Scholarship Program (awarded pursuant to sec. 338A–339G of the PHS Act) (25 U.S.C. 1613a). These programs are referred to herein as the ''scholarship programs.'' The regulations apply to increases in tuition and other educational costs occurring after the school year beginning immediately before October 1, 1981.

[57 FR 45745, Oct. 5, 1992]

§ 57.3202 How will allowable increases be determined?

(a) The Secretary is responsible for increases in tuition and other educational costs only if the same increase is charged to all students in the same category (for example, the same class year or place of residence) and without regard to whether the student is receiving support under the scholarship programs. A student participating in the scholarship programs may not be denied eligibility because of this participation for any discounts or rebates in tuition or other educational costs given to all other students in the same category at the institution.

(b) Institutions whose enrollment contains 25 percent or more students participating in the scholarship programs, and whose percentage increase in tuition and other educational costs in any school year exceeds the previous calendar year's average inflation rate as indicated by the *Consumer Price Index for All Urban Areas,* may be requested to provide the Secretary with detailed cost breakdowns justifying the increase.

(c) In the case of a school which is requested to provide the Secretary with cost increase justification under paragraph (b) of this section, the Secretary will be responsible for increases in tuition and other educational costs charged to students participating in the scholarship programs over the amount charged for the school year immediately preceding the increase only to the extent that they are: (1) Attributable to uncontrollable costs, such as fuel costs, mandated cost-of-living increases in wages, salaries and fringe benefits, (2) attributable to costs of maintaining and improving the quality of the health professions education provided by the institution, such as hiring additional faculty to improve the faculty-student ratio, costs incurred in off-site training of students, and necessary improvements in teaching equipment. Increases in patient care and research costs are allowable as part of an increase in tuition and other educational costs only to the extent that they can be documented as clearly necessary to maintain and improve the quality of the education being supported; or (3) attributable to loss of revenue from other sources which was used solely for the maintenance and improvement of the educational system.

These three categories of valid escalators of tuition and other educational costs are exclusive. However, the examples *within* each category are merely illustrative and not meant to be inclusive.

(d) If the Secretary, after reviewing all available data, information, and justifications submitted by an institution, determines that an increase in tuition and other educational costs is not allowable under the criteria described in paragraph (a) or (c) of this section, the Secretary will provide the affected institution a detailed written explanation of the basis of that determination. The Secretary will be responsible for that portion of tuition

and other educational costs the Secretary determines to be allowable.

[45 FR 71568, Oct. 29, 1980]

Subparts HH–LL [Reserved]

Subpart MM—Area Health Education Center Program

AUTHORITY: Sec. 215, Public Health Service Act, 58 Stat. 690, as amended by 63 Stat. 35 (42 U.S.C. 216); sec. 781, Public Health Service Act, 90 Stat. 2312 (42 U.S.C. 295g–1), as amended.

SOURCE: 48 FR 7446, Feb. 22, 1983, unless otherwise noted.

§ 57.3801 To what programs do these regulations apply?

The regulations of this subpart apply to cooperative agreements entered into by the Secretary under section 781 of the Public Health Service Act (42 U.S.C. 295g–1) with schools of medicine or osteopathy for the planning, development, and operation of area health education center programs.

§ 57.3802 Definitions.

Act means the Public Health Service Act.

Allied health personnel means individuals as defined in 42 CFR 58.502.

Area health education center or *center* means a public or nonprofit private entity which has a cooperative arrangement with one or more schools of medicine or osteopathy for the planning, development, and operation of an area health education center program. A center must be an entity which is recognized under the laws of the State in which it is located and which has as one of its principal functions the operation of the area health education center.

Area health education center program or *project* means a cooperative program among one or more schools of medicine or osteopathy and one or more area health education centers, which is capable of performing the functions described in sections 781(c) and (d) (2) of the Act and § 57.3804 of these regulations, and which is designed to improve the distribution, supply, quality, utilization, and efficiency of health personnel in the health services delivery system and to encourage the regionalization of educational responsibilities of health professions schools.

Cooperative agreement means a legal instrument that reflects an assistance relationship between the Federal Government and the recipient in which substantial programmatic involvement is anticipated between the Federal agency and the recipient during performance of the contemplated activity.

Clerkship means supervised clinical training.

Continuing medical education or *continuing education* means any education for the purpose of maintaining or enhancing the knowledge, attitudes or abilities of a health professional in his or her field which does not lead to any formal advanced standing in the profession.

Health professional means any physician, dentist, optometrist, podiatrist, pharmacist, nurse, nurse practitioner, physician assistant or allied health personnel.

Nurse practitioner means an individual as defined in 42 CFR 57.2402.

Physician assistant means an individual as defined in 42 CFR 57.802.

Preceptorship means an educational experience in which the student works with a designated health professional, the preceptor, who teaches in the student's field of study and personally supervises the student's clinical activity.

School of medicine, osteopathy, dentistry, optometry, podiatry, pharmacy, public health or veterinary medicine means a school as defined in section 701(4) of the Act which is accredited as provided in section 772(b) of the Act.

School of nursing means a collegiate, associate degree or diploma school of nursing as defined in section 853 of the Act.

Training center for allied health professions means a training center as defined in 42 CFR 58.402

Secretary means the Secretary of Health and Human Services and any other officer or employee of the Department of Health and Human Services to whom the authority involved has been delegated.

State means, in addition to the several States, only the District of Columbia, the Commonwealth of Puerto Rico,

the Commonwealth of Northern Mariana Islands, the Virgin Islands, Guam, American Samoa, and the Trust Territory of the Pacific Islands.

§ 57.3803 Who is eligible to apply for a cooperative agreement?

(a) Any public or nonprofit private school of medicine or osteopathy located in a State is eligible to submit a proposal.

(b) More than one accredited school of medicine or osteopathy may submit a joint proposal for the planning, development and operation of an area health education center program. In this case, each school must conduct the activities required by section 781(c) of the Act and § 57.3804(d) of these regulations.

§ 57.3804 Project requirements.

A project supported under this subpart must be conducted in accordance with the following requirements:

(a) Each area health education center program must have a program director who holds a faculty appointment at a medical or osteopathic school participating in the program and who is responsible for the overall direction and coordination of the program.

(b) Each area health education center program must have a program advisory committee to advise the program director on all aspects of the conduct of the program including administration, education and evaluation. This committee must include representatives of schools and programs of health professions which actively participate in the area health education center program under § 57.3804(d)(5) of this subpart and section 781(c)(4) of the Act, individuals with training and experience in the fields of medicine or osteopathy, dentistry, nursing, and an allied health profession, as well as a representative of each of the centers cooperating in the program.

(c) Each area health education center program must annually evaluate its activities to ascertain the extent to which it is meeting the purposes described in section 781(a) of the Act.

(d) *Requirements for schools of medicine or osteopathy*. A school of medicine or osteopathy participating in an area health education program (with the exception of a school whose only function is to provide resources by purchase agreement to a center) must meet the following requirements. However, a school of medicine or osteopathy must fulfill the requirement of § 57.3804(d)(4) only if no other school of medicine or osteopathy participating in the program meets this requirement. Each school of medicine or osteopathy must:

(1) Have a cooperative arrangement with an area health education center, as evidenced by a written agreement. This agreement must provide at a minimum that the schools participating in the program will perform the following functions:

(i) Provide faculty to assist in the conduct of the center's educational activities, as necessary;

(ii) Provide an agreed upon amount of funds to the center to assist the center in meeting the costs of its activities, including those described in section 781(d)(2) of the Act;

(iii) Be responsible for the quality of the education received in the center, including evaluating the quality of the educational programs required by section 781(d)(2) of the Act and the performance of its students while receiving clinical training in the center. The area health education center must agree to conduct the activities described in section 781(d)(2) of the Act and these regulations, and assist the schools participating in the program in meeting the requirements in section 781(c) of the Act and these regulations.

(2) Provide for the active participation in the program by individuals who are associated with the administration of the school, and staff or faculty members of each of the departments (or specialties if the school has no departments) of internal medicine, pediatrics, obstetrics and gynecology, surgery, psychiatry and family medicine. These persons may participate in the program in either the school or center and must perform, among others, the following functions: provide guidance on educational program or curriculum development and operation; instruct students (including residents and other practicing health professionals); perform student or program evaluation; and assist in program administration.

(3) Conduct no less than 10 percent of all undergraduate medical or osteopathic clinical education of the school in one or more centers and in clinical settings which are part of or affiliated with a center and in which the center arranges and supports the clinical education. The school shall assure that, annually, the ratio of student weeks of clinical education received by its undergraduate students in centers to the total number of student weeks of clinical education received by its undergraduate students, in any location, is no less than 0.10. For purposes of this paragraph, undergraduate medical or osteopathic clinical education means any clerkships, preceptorships, or other educational activities which are offered in the following fields: family medicine, internal medicine and its subspecialties, pediatrics and its subspecialties, dermatology, obstetrics and gynecology, surgery and its subspecialties, anesthesiology, psychiatry and its subspecialties, neurology, physical medicine and rehabilitation, emergency medicine, nuclear medicine and general preventive medicine, including community medicine. Courses, seminars, and other educational programs which are entirely didactic or laboratory in nature or which are primarily in anatomy, biochemistry, physiology, microbiology, pharmacology, or pathology are not included in this definition.

(i) The Secretary may waive, for good cause shown, all or part of the requirement of this paragraph if another such school participating in the same program meets the requirement.

(ii) To obtain a waiver, a school must submit a written request to the Secretary fully describing and documenting the good cause and stating which school meets the requirement. This request must include the following information:

(A) The extent to which the school for which the waiver has been requested has attempted to meet this requirement. A description of efforts and the reasons why the school cannot meet the requirement must demonstrate that the school has made a good faith effort, but constraints beyond its control have caused these efforts to be unsuccessful.

(B) The length of time for which this waiver is requested, and a plan and timetable for meeting the requirement.

(C) The alternative mechanisms the schools will use to provide clinical experiences in locations removed from the site of the teaching facilities where the major part of the educational program of any participating schools is conducted if the waiver is granted.

(4) Be responsible for, or conduct a program for the training of physician assistants, which meets the requirements of 42 CFR part 57, subpart I, or nurse practitioners, which meets the requirements of 42 CFR part 57, subpart Y, appendix. If one school which is participating in the area health education center program provides for or conducts a program for the training of physician assistants or nurse practitioners meeting this requirement, other schools participating in the program may, but need not, provide for or conduct a physician assistant or nurse practitioner program. Where the school is responsible for, but does not conduct one of these programs, it must participate in the presentation, review, and evaluation of one of these programs at an affiliated institution so that at least part of the education in the program is provided by faculty of the school. The school must give special consideration to the enrollment in these programs of individuals from or who plan to practice in the area served by the center by either:

(i) Giving preference to applicants whose place of residence has been in the area served by the center at any time prior to application; or

(ii) Obtaining a signed statement from applicants, indicating an intent to practice the skills acquired in the program in the areas.

(5) Provide for the active participation of at least two schools or programs of other health professions in the educational program conducted in the area served by the center(s). In meeting this requirement:

(i) One of the participating schools or programs must be a school of dentistry, if there is one affiliated with the university with which the school of medicine or osteopathy is affiliated;

(ii) Only the following schools or programs of other health professions may

be included to meet the requirement of this paragraph:

(A) Training centers for the allied health professions;

(B) Schools of nursing;

(C) Schools of optometry;

(D) Schools of pharmacy;

(E) Schools of podiatry; or

(F) Schools of public health.

(iii) Each school or program participating in the area health education center program under this paragraph must have a written agreement with the school(s) of medicine or osteopathy, under which the school or program agrees to assist and participate, as is appropriate, in the activities of each center as required under section 781(d)(2) of the Act.

(iv) Each school or program participating in the area health education center under this paragraph must have a written agreement with each center, under which the school or program agrees to provide some or all of its students with educational experiences in the center or in settings affiliated with the center, and the center agrees to arrange for and support the provision of the educational programs. This agreement may be part of the agreement required by paragraph (d)(1) of this section.

(e) *Requirements for area health education centers.* Each area health education center participating in an area health education center program must:

(1) Designate either a geographic area or medically underserved population which it will serve (''the area served by the center''). This area or population must be in a location remote from the main site of the teaching facilities of the schools which participate in the program. For purposes of this requirement,

(i) A medically underserved population means the population of a geographic area designated as a primary medical personnel shortage area under section 332 of the Act or a population group designated under section 332 of the Act as having a shortage of primary medical care personnel;

(ii) An area or population will meet this requirement if its location is removed from the site of the teaching facilities where the major part of the educational program of any participating school is conducted. The area served by the center must not duplicate, in whole or in part, the area served by any other center.

(2) Provide for or conduct training in health education services, in the area served by the center. This training must consist of courses and programs to train health professionals to instruct the public or patients in medical self-help, disease prevention, accident prevention, nutrition, physical fitness, and other subjects relating to health maintenance, and must include the principles of nutrition, the evaluation of nutritional status, and nutritional counseling. The training must be oriented toward the ethnic and cultural backgrounds of the people in the area.

(3) Assess the health manpower needs of the area served by the center and assist in the planning and development of training programs to meet these needs. In meeting this requirement, the center should work with existing health systems agencies designated for the area served by the center and other appropriate entities by cooperatively developing and sharing data on health personnel needs of the area for the next 10 years and in developing a plan for training programs to meet these needs. In areas where HSAs exist, the planned training programs must be consistent with the health personnel projections developed by the health systems agencies. At a minimum, the center must assess the need for (i) personnel to provide health education and nutrition counseling services; (ii) primary care health personnel including physicians in family practice, general internal medicine, general pediatrics, and obstetrics and gynecology, physician assistants, and nurse practitioners; (iii) mental health practitioners; (iv) dentists; and (v) nurses. In carrying out its responsibility to assess health personnel needs in the area, the center shall, to the maximum extent practicable, use existing data (including data used for the designation of shortage areas under sections 332 and 836(h) of the Act).

(4) Provide for or conduct a rotating osteopathic internship or medical residency training program in family practice, general internal medicine or general pediatrics, or osteopathy in which

no fewer than six persons are enrolled in first-year positions in the program. If one center which is participating in the area health education center program provides for or conducts a medical residency training program meeting this requirement, other centers participating in the program may, but need not, provide for or conduct a medical residency training program in these fields. In meeting this requirement:

(i) A family practice residency for allopathic and osteopathic physicians must meet the requirements of section 786(a) of the Act, and implementing regulations.

(ii) A general internal medicine or general pediatrics residency must meet the requirements of 42 CFR 57.3104, except for the requirements in paragraphs (h) and (i) of that section.

(iii) The center must conduct the medical residency training program at a site which is part of the center or provide for the conduct of this program, by written affiliation agreement with an appropriate entity located in the area served by the center.

(5) Provide opportunities for continuing medical education (including education in disease prevention) to all physicians and other health professionals practicing within the area served by the center. This continuing medical education must include courses, seminars, lectures, grand rounds, clinical pathological conferences, mini-residencies, library services, or in-house training, as appropriate, for all health professionals in the area. In meeting this requirement:

(i) The center must assess the need for providing continuing medical education taking into consideration the numbers, needs and location of health professionals in the area as well as educational activities available through other entities.

(ii) The center must announce the availability of continuing medical education activities offered in the center, as well as those provided through other entities in the area, through appropriate and usual distribution channels.

(6) Provide continuing medical education and other educational support services to the National Health Service Corps (Corps) members assigned to the area served by the center, after notification of the assignment(s) by the Secretary. In meeting this requirement, the center must:

(i) Establish an organized program which will provide for the assessment of the continuing medical education needs of the members of the Corps and offer to members of the Corps, at a cost not to exceed the cost to any other participant, continuing medical education relevant to these identified needs.

(ii) Assist in identifying resources for and encouraging the provision of:

(A) Consultation services, if needed, including telephone consultation to Corps personnel.

(B) A patient referral system, if necessary, to Corps patients and assistance to these patients in obtaining laboratory and pathological services at accessible locations.

(C) Supervision and consultation for non-physician and non-dentist members of the Corps in the area.

(D) Temporary substitutes for Corps personnel, as needed.

(7) Encourage the utilization of nurse practitioners and physician assistants in the area and the recruitment of individuals for training in these professions at the participating medical or osteopathic schools. In meeting this requirement, the center must:

(i) Inform potential employers in the area regarding the following, among other subjects;

(A) The function and utilization of nurse practitoners and physician assistants;

(B) State laws and regulations governing nurse practitioners and physician assistants; and

(C) Reimbursement and malpractice coverage for services rendered by nurse practitioners and physician assistants.

(ii) Determine employment opportunities for nurse practitioners and physician assistants and participate in referral and recruitment of persons for these positions.

(iii) Distribute information in the area concerning the nurse practitioner or physician assistant training program(s) provided for or conducted by the schools of medicine or osteopathy participating in the program, and participate in recruiting persons in the area for the programs.

(8) Arrange and support educational opportunities for medical and other students at affiliated health facilities, ambulatory care centers, and health agencies throughout the area served by the center. In meeting this requirement, the center must:

(i) Coordinate the conduct of the following programs, including assisting in their planning and development, obtaining the necessary resources and providing administrative support services for:

(A) Clinical education for undergraduate medical or osteopathic students in at least family practice, general internal medicine or general pediatrics;

(B) Education for undergraduate and, as appropriate, graduate students, at a school of dentistry, if one is participating in the program;

(C) Education for students of the other schools or programs participating in the area health education center program under paragraph (d)(5) of this section; and

(D) Orientation for high school and post-high school students in schools in the area to develop awareness of health careers and health opportunities.

(9) Have an advisory board of which at least 75 percent of the members are persons from the area served by the center, including health service providers and consumers. For this purpose, health service providers are individuals who derive more than 10 percent of their annual income from the health care industry. In meeting this requirement:

(i) The advisory board must be reasonably divided between:

(A) Providers of health care, including at least one physician, dentist, nurse, and allied health professional who is actively engaged in the practice of his or her profession in the area served by the center; and

(B) Consumers, including students, who reside in the area and are broadly representative of the population in the area in terms of demographic factors, such as race, ethnic background and sex. The advisory board shall advise the chief administrative official of the center on all major policies concerning the operation of the center, on the establishment of center program priorities and on other issues, as necessary.

§ 57.3805 When do the requirements of § 57.3804 apply?

(a) The period of time in which any entity will have to meet all the requirements or § 57.3804 will be negotiated on a case-by-case basis, depending upon the nature and scope of the planned area health education center program. No cooperative agreement, however, shall provide funds solely for the planning or development of a program for a period of longer than two years.

(b) Each area health education center program must begin planning for at least one center during the first year of support so that at least one center is fully operational and meets all the applicable requirements of § 57.3804 during the third year of support. Additional centers may be phased in during the first four years of Federal support except that once planning for any center is initiated, it must become fully operational and meet all the applicable requirements of § 57.3804 within three years.

(c) Each school with which the Secretary enters into a cooperative agreement under this subpart must meet all the requirements of § 57.3804 during the first four years of Federal support, except that once planning to add any school is initiated, it must meet all the applicable requirements of § 57.3804 within three years.

§ 57.3806 How will applications be evaluated?

(a) After consulting with the National Advisory Council on Health Professions Education established by section 702 of the Act, the Secretary will award cooperative agreements to applicants whose projects will best promote the purposes of section 781 of the Act and these regulations, taking into consideration among other factors:

(1) The degree to which the proposed project adequately provides for the program requirements set forth in § 57.3804;

(2) The capability of the applicant to carry out the proposed project; and

(3) The extent of the need of the area to be served by the proposed area health education center.

(b) In determining the funding of applications approved under paragraph (a) of this section, the Secretary will consider any special factors relating to national needs as the Secretary may from time to time announce in the FEDERAL REGISTER.

[48 FR 7446, Feb. 22, 1983, as amended at 53 FR 14792, Apr. 26, 1988]

§ 57.3807 How is the amount of the award determined?

(a) The amount of the award will be based on the Secretary's estimate of the sum necessary for the approved activity.

(b) The Secretary will not provide in any year under this subpart more than 75 percent of the total operating funds of an area health education center program.

§ 57.3808 How long does support under a cooperative agreement last?

(a) The cooperative agreement will specify the length of time the Secretary intends to support the project without requiring the project to recompete for funds. In addition, the maximum period during which a project may be funded will be specified in each cooperative agreement.

(b) Generally, the project will initially be funded for one year, and subsequent continuation awards will also be for one year at a time. A school which enters into a cooperative agreement must submit a separate application to have the support continued for each subsequent year. Decisions regarding continuation awards and the funding levels of these continuation awards will be made after consideration of such factors as the applicant's progress and management practices, and the availability of funds. In all cases, continuation awards require a determination by the Secretary that continued funding is in the best interest of the Federal Government.

(c) Neither the approval of any application nor the entering into of any cooperative agreement commits or obligates the Federal Government in any way to make any additional, supplemental, continuation or other award with respect to any approved application or portion of an approved application.

(d) Any balance of federally obligated funds remaining unobligated by the school at the end of a budget period may be carried forward to the next budget period, for use as prescribed by the Secretary, provided a continuation award is made. If at any time during a budget period it becomes apparent to the Secretary that the amount of Federal funds awarded and available to the school for that period, including any unobligated balance carried forward from prior periods, exceeds the school's needs for the period, the Secretary may adjust the amounts awarded by withdrawing the excess. A budget period is an interval of time (usually 12 months) into which the project period is divided for funding and reporting purposes.

§ 57.3809 For what purposes may cooperative agreement funds be spent?

(a) A school which is awarded a cooperative agreement shall only spend funds it receives under this subpart according to the approved application and budget, the authorizing legislation, terms and conditions of the cooperative agreement award, applicable cost principles specified in subpart Q of 45 CFR part 74, and these regulations.

(b) The area health education center program must spend at least 75 percent of the funds provided under this subpart in any year in area health education centers.

(c) Schools which are awarded cooperative agreements may not spend cooperative agreement funds for sectarian instruction or for any religious purpose.

§ 57.3810 How will the Department participate in a cooperative agreement?

The Secretary anticipates substantial Federal involvement in the management of the project supported under the cooperative agreement. This involvement may include, as determined necessary, the following activities, among others:

(a) Reviewing and approving plans, upon which continuation of the cooperative agreement is contingent, to permit appropriate direction and conduct of activities;

(b) Reviewing and approving all contracts between the cooperating school of medicine, other health professions schools, and area health education centers;

(c) Participating with project staff in the development of funding projections;

(d) Developing with project staff data collection systems and procedures; and

(e) Participating with project staff in the design of project evaluation protocols and methodologies.

§ 57.3811 What additional Department regulations apply to awardees?

Several other regulations apply to cooperative agreements under this subpart. These include, but are not limited to:

42 CFR part 50, subpart D—Public Health Service grant appeals procedure

45 CFR part 16—Procedures of the Departmental Grant Appeals Board

45 CFR part 46—Protection of human subjects

45 CFR part 74—Administration of grants

45 CFR part 75—Informal grant appeals procedures

45 CFR part 76—Debarment and suspension from eligibility for financial assistance

45 CFR part 80—Nondiscrimination under programs receiving Federal assistance through the Department of Health and Human Services effectuation of title VI of the Civil Rights Act of 1964

45 CFR part 81—Practice and procedure for hearings under part 80 of this title

45 CFR part 83—Regulation for the administration and enforcement of sections 799A and 845 of the Public Health Service Act[1]

45 CFR part 84—Nondiscrimination on the basis of handicap in programs and activities receiving or benefiting from Federal financial assistance

45 CFR part 86—Nondiscrimination on the basis of sex in education programs and activities receiving or benefiting from Federal financial assistance

45 CFR part 91—Nondiscrimination on the basis of age in HHS programs or activities receiving Federal financial assistance

[49 FR 38115, Sept. 27, 1984]

§ 57.3812 What other audit and inspection requirements apply?

Each school which enters into a cooperative agreement must, in addition to the requirements of 45 CFR part 74, meet the requirements of section 705 of the Act concerning audit and inspection.

§ 57.3813 Additional conditions.

The Secretary may impose additional conditions on any award before or at the time of any award if the Secretary determines that these conditions are necessary to assure or protect the advancement of the approved activity, the continued viability of the school, the interest of the public health, or the conservation of public funds.

Subpart NN [Reserved]

Subpart OO—Grants for Geriatric Education Centers

AUTHORITY: Sec. 215 of the Public Health Service Act, 58 Stat. 690, 67 Stat. 631 (42 U.S.C. 216); sec. 788(d) of the Public Health Service Act, 99 Stat. 542 (42 U.S.C. 295g–8); redesignated as sec. 789(a), as amended by Pub. L. 100–607, 102 Stat. 3136–37 (42 U.S.C. 295g–9(a)); renumbered as sec. 777(a), as amended by Pub. L. 102–408, 106 Stat. 2052–54 (42 U.S.C. 294o).

SOURCE: 54 FR 5617, Feb. 6, 1989, unless otherwise noted.

§ 57.4001 To what projects do these regulations apply?

These regulations apply to grants to eligible schools and programs under section 777(a) of the Public Health Service Act for geriatric training projects.

[54 FR 5617, Feb. 6, 1989, as amended at 57 FR 45746, Oct. 5, 1992; 58 FR 66298, Dec. 20, 1993]

§ 57.4002 Definitions.

Act means the Public Health Service Act, as amended.

Allied health professional means a health professional who has received a certificate, an associate's degree, a bachelor's degree, a master's degree, a

[1] Section 799A of the Public Health Service Act was redesignated as section 704 by Pub. L. 94–484; section 845 of the Public Health Service Act was redesignated as section 855 by Pub. L. 94–63.

doctoral degree, or postbaccalaureate training, in a science relating to health care and meets the requirements as established in section 799(5) of the Act.

Budget period means the interval of time into which the project period is divided for budgetary and reporting purposes, as specified in the grant award document.

Continuing education means structured educational programs for practicing health professionals and allied health professionals for the purpose of improving the knowledge and skills in geriatrics of such practitioners with respect to treatment of the health problems of elderly individuals.

Geriatrics is the total health and social care of the elderly.

Geriatric Medicine means the prevention, diagnosis, care and treatment of illness and disability as required by the distinct needs of the elderly.

Graduate program in clinical social work and *graduate program in marriage and family therapy* means an accredited graduate program as defined in section 799(1)(C) of the Act.

Graduate program in mental health practice means a graduate program in clinical psychology, clinical social work, or marriage and family therapy (section 799(1)(D) of the Act).

Health professional means, for purposes of this subpart, any allopathic or osteopathic physician, dentist, optometrist, podiatrist, pharmacist, professional nurse (as defined in § 57.2502), and nurse practitioner (as defined in § 57.2402), physician assistant, chiropractor, clinical psychologist, health administrator, or allied health professional.

Health professions schools means any school of medicine, dentistry, osteopathic medicine, pharmacy, optometry, podiatric medicine, veterinary medicine, public health, chiropractic, graduate programs in health administration, or graduate programs in clinical psychology, as defined in section 799(1)(A), (B), (C), and (D) of the Act and as accredited in section 799(1)(E) of the Act.

Nonprofit refers to the status of an entity which is a corporation or association, or is owned and operated by one or more corporations or associations no part of the net earnings of which inures, or may lawfully inure, to the benefit of any private shareholder or individual.

Program for the training of physician assistants means any educational programs as defined in section 799(3) of the Act.

Project director means an individual designated by the grantee in the grant application and approved by the Secretary to direct the project being supported under this subpart.

Project period means the total time for which support for a project has been approved including any extensions of the project.

School of allied health means a public or private nonprofit junior college, college, university or hospital-based educational entity which provides or is accredited to provide a program of education to enable individuals to become allied health professionals or to provide additional training for allied health professionals and which meets the criteria set forth in section 799(4) of the Act.

School of nursing means a collegiate, associate degree, or diploma school of nursing in a State (section 853(2) of the Act).

Secretary means the Secretary of Health and Human Services and any other officer or employee of the Department of Health and Human Services to whom the authority involved has been delegated.

State means, in addition to the several States, the District of Columbia, the Commonwealth of Puerto Rico, the Commonwealth of the Northern Mariana Islands, the Virgin Islands, Guam, American Samoa, the Republic of Palau, the Republic of the Marshall Islands, and the Federated States of Micronesia.

Training and retraining of faculty means a program to train and retrain faculty to provide geriatric instruction which is not a 1-year retraining program for faculty in schools of medicine and osteopathic medicine in geriatrics or a 1-year or 2-year internal medicine or family medicine fellowship program as identified in section 777(3)(A) and (B) of the Act.

[54 FR 5617, Feb. 6, 1989, as amended at 57 FR 45746, Oct. 5, 1992; 58 FR 66298, Dec. 20, 1993; 61 FR 6129, Feb. 16, 1996]

§ 57.4003 Who is eligible to apply for a grant?

Any public or private nonprofit health professions school, school of allied health, or program for the training of physician assistants located in a State may apply for a grant under this subpart. Each eligible applicant desiring a grant under this subpart shall submit an application in the form and at the time the Secretary may prescribe.

[54 FR 5617, Feb. 6, 1989, as amended at 57 FR 45746, Oct. 5, 1992]

§ 57.4004 Program requirements.

(a) The Secretary will award grants to meet the cost of carrying out one or more of the following six purposes:

(1) Improve the training of health professionals in geriatrics;

(2) Develop and disseminate curricula relating to the treatment of the health problems of elderly individuals;

(3) Expand and strengthen instruction in methods of geriatric treatment;

(4) Support the training and retraining of faculty;

(5) Support continuing education of health professionals and allied health professionals who provide geriatric treatment; and

(6) Establish new affiliations with nursing homes, chronic and acute disease hospitals, ambulatory care centers, and senior centers in order to provide students with clinical training in geriatric medicine.

(b) Projects must include one or more of the activities in paragraphs (a) (1) through (6) of this section for four or more types of health professionals as defined in § 57.4002 of this subpart.

(c) Each project must evaluate the program systematically, including the determination of a baseline at the outset of the project and the measurement of the degree to which program and educational objectives are met.

[54 FR 5617, Feb. 6, 1989, as amended at 58 FR 66299, Dec. 20, 1993]

§ 57.4005 How will applications be evaluated?

(a) As required by section 798(a) of the Act, each application for a grant under this subpart shall be submitted to a peer review group, composed principally of non-Federal experts, for an evaluation of the merits of the proposals made in the application. The Secretary may not approve such an application unless a peer review group has recommended the application for approval. The Secretary will decide which applications to approve by considering, among other factors:

(1) The degree to which the proposed project adequately provides for the project requirement described in § 57.4004;

(2) The extent to which the rationale and specific objectives of the project are based upon a needs assessment of the status of geriatrics training in the institutions to be assisted and/or the geographic area to be served;

(3) The ability of the project to achieve the project objectives within the proposed geographic area;

(4) The adequacy of educational facilities and clinical training settings to accomplish objectives;

(5) The adequacy of organizational arrangement involving professional schools and other organizations necessary to carry out the project;

(6) The adequacy of the qualifications and experience in geriatrics of the project director, staff and faculty;

(7) The administrative and managerial ability of the applicant to carry out the proposed project in a cost-effective manner; and

(8) The potential of the project to continue on a self-sustaining basis.

(b) In determining the funding of applications approved under paragraph (a) of this section, the Secretary will consider any special factors relating to national needs as the Secretary may from time to time announce in the FEDERAL REGISTER.

[54 FR 5617, Feb. 6, 1989, as amended at 57 FR 45746, Oct. 5, 1992; 58 FR 66299, Dec. 20, 1993]

§ 57.4006 How long does grant support last?

(a) The notice of grant award specifies the length of time the Secretary intends to support the project without requiring the project to recompete for funds. This period, called the project period, will not exceed 3 years. The maximum period of support, including

the initial project period and competitive extensions, may not exceed 6 years.

(b) Generally, the grant will initially be funded for 1 year, and subsequent continuation awards will also be for 1 year at a time. Decisions regarding continuation awards and the funding levels of these awards will be made after consideration of such factors as the grantee's progress and management practices, existence of legislative authority, and the availability of funds. In all cases, continuation awards require a determination by the Secretary that continued funding is in the best interest of the Federal Government.

(c) Neither the approval of any application nor the award of any grant shall commit or obligate the United States in any way to make any additional, supplemental, continuation or other award with respect to any approved application or portion of an approved application. For continuation support, grantees must make separate application at such times and in such a form as the Secretary may prescribe.

[54 FR 5617, Feb. 6, 1989, as amended at 58 FR 66299, Dec. 20, 1993]

§ 57.4007 For what purposes may grant funds be spent?

(a) A grantee shall only spend funds it receives under this subpart according to the approved application and budget, the authorizing legislation, terms and conditions of the grant award, applicable cost principles specified in subpart Q of 45 CFR part 74, and these regulations.

(b) Grantees may not spend grant funds for sectarian instruction or for any religious purpose.

(c) Any balance of federally obligated grant funds remaining unobligated by the grantee at the end of a budget period may be carried forward provided specific approval is granted by the Secretary. If at any time during a budget period it becomes apparent to the Secretary that the amount of Federal funds awarded and available to the grantee for that period, including any unobligated balance carried forward from prior periods, exceeds the grantee's needs for the period, the Secretary may adjust the amounts awarded by withdrawing the excess. A budget period is an interval of time (usually 12 months) into which the project period is divided for funding and reporting purposes.

[54 FR 5617, Feb. 6, 1989, as amended at 57 FR 45746, Oct. 5, 1992]

§ 57.4008 What additional Department regulations apply to grantees?

Several other regulations apply to grants under this subpart.

These include, but are not limited to:

42 CFR part 50, subpart D—Public Health Service grant appeals procedure
45 CFR part 16—Procedures of the Departmental Grant Appeals Board
45 CFR part 46—Protection of human subjects
45 CFR part 74—Administration of grants
45 CFR part 75—Informal grant appeals procedures
45 CFR part 76—Governmentwide Debarment and Suspension (nonprocurement) and Governmentwide Requirements for Drug-Free Workplace (Grants)
45 CFR part 80—Nondiscrimination under programs receiving Federal assistance through the Department of Health and Human Services effectuation of title VI of the Civil Rights Act of 1964
45 CFR part 81—Practice and procedure for hearings under part 80 of this title
45 CFR part 83—Regulation for the administration and enforcement of sections 794 and 855 of the Public Health Service Act
45 CFR part 84—Nondiscrimination on the basis of handicap in programs and activities receiving or benefiting from Federal financial assistance
45 CFR part 86—Nondiscrimination on the basis of sex in education programs and activities receiving or benefiting from Federal financial assistance
45 CFR part 91—Nondiscrimination on the basis of age in HHS programs or activities receiving Federal financial assistance
45 CFR part 93—New restrictions on lobbying.

[54 FR 5617, Feb. 6, 1989, as amended at 57 FR 45746, Oct. 5, 1992; 61 FR 6129, Feb. 16, 1996]

§ 57.4009 What other audit and inspection requirements apply to grantees?

Each entity which receives a grant under this subpart must meet the requirements of 45 CFR part 74 concerning audit and inspection.

[61 FR 6129, Feb. 16, 1996; 61 FR 51020, Sept. 30, 1996]

§ 57.4010 Additional conditions.

The Secretary may impose additional conditions in the grant award before or at the time of the award if he or she determines that these conditions are necessary to assure or protect the advancement of the approved activity, the interest of the public health, or the conservation of grant funds.

Subpart PP—Grants for Faculty Training Projects in Geriatric Medicine and Dentistry

AUTHORITY: Sec. 215 of the Public Health Service Act, 58 Stat. 690, 67 Stat. 631 (42 U.S.C. 216); sec. 789(b) of the PHS Act, as amended by Public Law 100–607, 102 Stat. 3136–3138 (42 U.S.C. 295g–9(b)); renumbered as sec. 777(b), as amended by Pub. L. 102–408, 106 Stat. 2052–54 (42 U.S.C. 294o).

SOURCE: 55 FR 37481, Sept. 12, 1990, unless otherwise noted.

§ 57.4101 To what projects do these regulations apply?

These regulations apply to grants to eligible schools and programs under section 777(b) of the Act (42 U.S.C. 294o) for the purpose of providing support for projects to train physicians and dentists who plan to teach geriatric medicine, geriatric psychiatry, or geriatric dentistry, including traineeships, and fellowships for participation in these programs.

[59 FR 63902, Dec. 12, 1994]

§ 57.4102 Definitions.

Act means the Public Health Service Act, as amended.

Budget period means the interval of time (usually 12 months) into which the project period is divided for budgetary and funding purposes.

Elderly means a population with health care conditions and needs which differ significantly from those of younger people, which are often complicated by the physical, behavioral, and social changes associated with aging. This would include all persons over 60, but may include slightly younger people who are subject to similar physical and/or mental conditions.

Extended care facility means a health care institution or distinct part of an institution that furnishes, in lieu of hospitalization, room and board and medically-prescribed skilled nursing care or rehabilitative services 24 hours a day by an organized health care staff.

Fellow means an allopathic physician, osteopathic physician, or dentist participating in a retraining program or fellowship program supported by a grant under section 777(b).

Fellowship program means a 2-year organized training effort sponsored by an allopathic or osteopathic medical school, a teaching hospital, or a graduate medical education program which is designated to provide training for—

(1) Physicians who have completed a graduate medical education program in internal medicine, family medicine (including osteopathic general practice), psychiatry, neurology, gynecology, or rehabilitation medicine; and

(2) Dentists who have demonstrated a commitment to an academic career and who have completed postdoctoral dental training, including postdoctoral dental education programs or who have relevant advanced training or experience.

Full-time teaching physician means an allopathic or osteopathic physician who is a faculty member of the grantee institution and who is engaged in teaching, research, clinical, and administrative activities normally performed by teaching faculty employed on a full-time basis, as defined by the grantee institution.

Full-time teaching dentist means a dentist who is a faculty member and who is engaged in teaching, research, clinical, and administrative activities normally performed by teaching faculty employed on a full-time basis, as defined by the institution. The dental faculty member does not have to be employed by the grantee institution but can be a dental faculty member at another institution which has an affiliation agreement with the grantee institution.

Full-time training means full-time training, as defined by the grantee institution.

Geriatric dentistry means the provision of dental care for elderly persons, particularly those with one or more chronic or debilitating, physical or

mental illnesses with associated medication or psychosocial problems.

Geriatric medicine means the prevention, diagnosis, and medical treatment of illness and disability as required by the needs of the elderly.

Geriatric psychiatry means the prevention, diagnosis, evaluation and treatment of mental disorders and disturbances seen in older adults.

Graduate medical education program means a program sponsored by a school of medicine, a school of osteopathic medicine, a hospital, or a public or private nonprofit institution, which:

(1) Offers postgraduate medical training in the specialties and subspecialties of medicine; and

(2) Has been accredited by the Accreditation Council for Graduate Medical Education or the American Osteopathic Association through its Committee on Postdoctoral Training.

Grantee means an entity that receives a grant and assumes legal and financial responsibility both for the awarded funds and for the performance of the grant-supported activity.

Longitudinal care means the provision of medical or dental care to the same panel of elderly patients for a period of at least 9 months in each year of training.

Part-time teaching dentist means a dentist who is a faculty member and who is engaged in teaching, research, clinical, and administrative activities normally performed by teaching faculty employed on a part-time basis, as defined by the institution. The dental faculty member does not have to be employed by the grantee institution but can be a dental faculty member at another institution which has an affiliation agreement with the grantee institution.

Postdoctoral dental education program means a program sponsored by a school of dentistry, a hospital, or a public or private nonprofit institution, which:

(1) Offers postdoctoral training in the specialties of dentistry, advanced education in general dentistry, or a dental general practice residency; and

(2) Has been accredited by the Commission on Dental Accreditation.

Primary care means health care which may be initiated by the patient or the provider, or both, in a variety of settings, and which consists of a broad range of personal health care services including promotion and maintenance of health, prevention of illness and disability, basic care during acute and chronic phases of illness, guidance and counseling of individuals and families, and referral to other health care providers and community resources when appropriate. In providing the services:

(1) The physical, emotional, social, and economic status of the patient is considered in the context of his or her cultural and environmental back ground, including the family and community; and

(2) The patient is provided timely access to the health care system.

Project means all activities, including training programs, specified or described in a grant application as approved for funding.

Project director means an individual designated by the recipient and approved by the Secretary to direct the project being supported under section 777(b).

Project period means the total time for which support for a project has been approved, including any extension thereof, by the awarding unit.

Relevant advanced training or experience means at least one of the following: (1) Completion of at least a 12-month graduate training program in a health-related discipline, the basic sciences, or education; (2) a minimum of 2 years of teaching experience in an accredited dental education program of which at least 12 months were devoted in part to issues pertaining to the care of older adults; or (3) a minimum of 2 years of clinical practice, of which at least 12 months were devoted in part to managing older dental patients in a hospital, long-term care facility, or other setting.

Retraining program means a 1-year program of full-time individualized training in clinical geriatrics and geriatric research for physicians who are faculty members in departments of internal medicine, family medicine (including osteopathic general practice), gynecology, geriatrics, or psychiatry at schools of medicine and osteopathic medicine, and dentists who are faculty members at schools of dentistry or at hospital departments of dentistry.

School of medicine or *school of osteopathic medicine* means a public or private nonprofit school which provides training leading, respectively, to a degree of doctor of medicine or a degree of doctor of osteopathic medicine, and which is accredited as provided in section 799(1)(E) of the Act.

Secretary means the Secretary of Health and Human Services, and any other officer or employee of the Department of Health and Human Services to whom the authority involved has been delegated.

State means, in addition to the several States, the District of Columbia, the Commonwealth of Puerto Rico, the Commonwealth of the Northern Mariana Islands, the Virgin Islands, Guam, American Samoa, the Republic of Palau, the Republic of the Marshall Islands, and the Federated States of Micronesia.

Teaching hospital means a public or private nonprofit hospital which is:

(1) Accredited by the Joint Commission on Accreditation of Hospitals or the American Osteopathic Association; and

(2) Operates at least one postdoctoral training program which is fully or provisionally accredited by the Accreditation Council for Graduate Medical Education or approved by the American Osteopathic Association.

[55 FR 37481, Sept. 12, 1990, as amended at 56 FR 29194, June 26, 1991; 57 FR 45746, Oct. 5, 1992; 59 FR 63902, Dec. 12, 1994; 61 FR 6129, Feb. 16, 1996]

§ 57.4103 Who is eligible to apply for a grant?

Public or private nonprofit schools of medicine, schools of osteopathic medicine, teaching hospitals, and graduate medical education programs located in a State are eligible to apply for a grant under this subpart. Each eligible applicant desiring a grant under this subpart shall submit an application in the form and at such time as the Secretary may prescribe.

(Approved by the Office of Management and Budget under control number 0915–0060)

[54 FR 5617, Feb. 6, 1989, as amended at 57 FR 45746, Oct. 5, 1992]

§ 57.4104 For what projects may grant funds be requested?

Each eligible applicant must propose a fellowship program or a retraining program.

[54 FR 5617, Feb. 6, 1989, as amended at 57 FR 45746, Oct. 5, 1992]

§ 57.4105 Project requirements.

A project supported under this subpart must be conducted in accordance with the following requirements:

(a) The project must have a project director who is employed full time by the grantee institution;

(b) Projects must have an appropriate administrative and organizational plan, and adequate faculty, physical, and administrative resources for the achievement of stated objectives;

(c) Projects must systematically evaluate the training program, including the performance and competence of trainees and faculty, the administration of the program, and the degree to which program and educational objectives are met;

(d) The project must be under the programmatic control of a graduate medical education program in internal medicine or family medicine (including osteopathic general practice) or in a department of geriatrics or psychiatry;

(e) The project must be staffed by at least two physicians in full-time teaching positions who have experience or training in geriatric medicine or geriatric psychiatry and be staffed, or enter into an agreement with an institution staffed, by at least one dentist who is employed in a full- or part-time teaching position and has experience or training in geriatrics;

(f) The project must provide fellows with training in geriatrics and exposure to the physical and mental disabilities of a diverse population of elderly individuals. The population must include:

(1) Elderly in various levels of wellness from fully independent and well, to patients confined to bed with serious illness; and

(2) Elderly from a range of socioeconomic, racial and ethnic backgrounds;

(g) The project must provide medical and dental training experiences in:

(1) An ambulatory care setting;
(2) An inpatient service; and
(3) An extended care facility,

During the course of the training, each fellow must receive experience in primary care, consultation, and longitudinal care;

(h) Fellowship programs must have a curriculum which includes training in clinical geriatrics, teaching skills, administrative skills, and research skills for physicians and dentists;

(i) Retraining programs must provide 1 year of full-time training suited to the individual needs of each fellow. To assure that the needs of all fellows can be met, each retraining program must have the resources available to provide clinical, research, administrative, and teacher-training experience; and

(j) Effective in the second year of grant support, a minimum of three entering fellows, including at least one physician and one dentist, must be enrolled in each training program for which grant support is received. The Secretary may suspend this requirement if the Secretary determines that a grantee has made a good faith effort to comply with this requirement through the various recruitment means available in its institution and at the national level, and has met the other requirements stated in this section but is unable to have the required number of fellows in the program due to circumstances beyond its control.

[55 FR 37481, Sept. 12, 1990, as amended at 56 FR 29194, June 26, 1991; 57 FR 45746, Oct. 5, 1992; 59 FR 63902, Dec. 12, 1994]

§ 57.4106 How will applications be evaluated?

(a) As required by section 798(a) of the Act, each application for a grant under this subpart shall be submitted to a peer review group, composed principally of non-Federal experts, for an evaluation of the merits of the proposals made in the application. The Secretary may not approve such an application unless a peer review group has recommended the application for approval. The Secretary will award grants to applicants whose projects will best promote the purposes of section 777(b) of the Act and these regulations. The Secretary will consider, among other factors:

(1) The extent to which the proposed training program will prepare physicians and dentists to perform the research, teaching, administrative and clinical duties of a faculty member specializing in geriatrics;

(2) The degree to which the project plan adequately provides for meeting the requirements set forth in § 57.4105;

(3) The administrative, management and resource capability of the applicant to carry out the proposed project in a cost-effective manner;

(4) The potential for the applicant to continue the program without Federal support after completion of the requested project period; and

(5) The extent to which the project will increase the number of geriatric fellowship and retraining positions available for individuals who want to prepare for academic careers in geriatric medicine, psychiatry, or dentistry.

(b) In determining the funding of applications approved under paragraph (a) of this section, the Secretary will consider any special factors relating to national needs as the Secretary may from time to time announce in the FEDERAL REGISTER.

[55 FR 37481, Sept. 12, 1990, as amended at 59 FR 63902, Dec. 12, 1994]

§ 57.4107 How long does grant support last?

(a) The notice of grant award specifies the length of time the Secretary intends to support the project without requiring the project to recompete for funds. This period, called the project period, will not exceed 5 years.

(b) Generally, the grant will initially be funded for 1 year, and subsequent continuation awards will also be for 1 year at a time. Decisions regarding continuation awards and the funding levels of these awards will be made after consideration of such factors as the grantee's progress and management practices, existence of legislative authority, and the availability of funds. In all cases, continuation awards require a determination by the Secretary that continued funding is in the best interest of the Federal Government.

(c) Neither the approval of any application nor the award of any grant shall

commit or obligate the United States in any way to make any additional, supplemental, continuation, or other award with respect to any approved application or portion of an approved application. For continuation support, grantees must make separate application at such time and in such a form as the Secretary may prescribe.

[55 FR 37481, Sept. 12, 1990, as amended at 57 FR 45746, Oct. 5, 1992]

§ 57.4108 What financial support is available to fellows?

Expenditures from funds are limited to:

(a) Tuition and fees, in accordance with the established rates of the institution, except as limited by the Secretary;

(b) Stipend support, in accordance with established Public Health Service postdoctoral stipend levels; and

(c) Travel to field training if the site is beyond a reasonable commuting distance and requires the fellow to establish a temporary new residence. However, fellowship funds may not be used for daily commuting from the new place of residence to the field training headquarters.

§ 57.4109 Who is eligible for financial assistance as a fellow?

To be eligible for a fellowship an individual must:

(a) Be a resident of the United States and either a citizen or national of the United States, an alien lawfully admitted for permanent residence in the United States, a citizen of the Commonwealth of the Northern Mariana Islands, a citizen of the Republic of Palau, a citizen of the Republic of the Marshall Islands, or a citizen of the Federated States of Micronesia;

(b) Be a physician or a dentist enrolled in a ''fellowship program'' or a ''retraining program'' as defined in § 57.4102; and

(c) Not be receiving concurrent support for the same training from another Federal education award which provides a stipend or otherwise duplicates financial provisions except education benefits under the Veteran's Readjustment Benefits Act, and loans from Federal sources.

[55 FR 37481, Sept. 12, 1990, as amended at 61 FR 6129, Feb. 16, 1996]

§ 57.4110 What are the requirements for fellowships and the appointment of fellows?

(a) The grantee must complete a statement which documents the appointment of each fellow. To complete this statement the grantee must require the provision of information and documentation of eligibility by each fellow. The statement of appointment must be completed by the beginning of the training period or as soon thereafter as possible if the fellow receives notice of his or her fellowship appointment after the training period has begun. The statement of appointment must include information to document the eligibility of the fellow and certify that there will be compliance with all applicable Public Health Service terms and conditions governing the appointment. The program director must sign the statement on behalf of the grantee, and the fellow must sign it thus certifying the statements are true and complete. The original copy of the statement must be retained by the grantee to be available for program review and financial audit. A copy shall be provided to the fellow for his or her records.

(b) The grantee may not require fellows to perform work which is not an integral part of the geriatric training program, or to perform services which detract from or prolong their training.

(Approved by the Office of Management and Budget under control number 0915–0060)

[55 FR 37481, Sept. 12, 1990, as amended at 56 FR 29194, June 26, 1991]

§ 57.4111 Termination of fellowships.

(a) The grantee must terminate a fellowship:

(1) Upon request of the fellow;

(2) If the fellow withdraws from the grantee institution; or

(3) If the grantee determines that:

(i) The fellow is no longer an active participant in the training program; or

(ii) The fellow is not eligible or able to continue in accordance with its standards and practices.

(b) The grantee must deposit any Federal portion of the tuition refund owed to a fellow into the grant account and provide written notice to the fellow that it is doing so.

(Approved by the Office of Management and Budget under control number 0915–0060)

[55 FR 37481, Sept. 12, 1990, as amended at 56 FR 29194, June 26, 1991. Redesignated at 59 FR 63902, Dec. 12, 1994]

§ 57.4112 For what purposes may grant funds be spent?

(a) A grantee shall only spend funds it receives under this subpart according to the approved application and budget, the authorizing legislation, terms and conditions of the grant award, applicable cost principles specified in subpart Q of 45 CFR part 74, and this subpart.

(b) Grantees may not spend grant funds for sectarian instruction or for any religious purpose.

(c) Any balance of federally-obligated grant funds remaining unobligated by the grantee at the end of a budget period may be carried forward provided specific approval is granted by the Secretary. If at any time during a budget period, it becomes apparent to the Secretary that the amount of Federal funds awarded and available to the grantee for that period, including any unobligated balance carried forward from prior periods, exceeds the grantee's needs for the period, the Secretary may adjust the amounts awarded by withdrawing the excess. A budget period is an interval of time (usually 12 months) into which the project period is divided for funding and reporting purposes.

[55 FR 37481, Sept. 12, 1990, as amended at 57 FR 45746, Oct. 5, 1992. Redesignated at 59 FR 63903, Dec. 12, 1994]

§ 57.4113 What additional Department regulations apply to grantees?

Several other regulations apply to grants under this subpart. These include, but are not limited to:

42 CFR part 50, subpart D—Public Health Service grant appeals procedure
45 CFR part 16—Procedures of the Departmental Grant Appeals Board
45 CFR part 46—Protection of human subjects
45 CFR part 74—Administration of grants
45 CFR part 75—Informal grant appeals procedures
45 CFR part 76—Governmentwide Debarment and Suspension (nonprocurement) and Governmentwide Requirements for Drug-Free Workplace (Grants)
45 CFR part 80—Nondiscrimination under programs receiving Federal assistance through the department of Health and Human Services effectuation of title VI of the Civil Rights Act of 1964
45 CFR part 81—Practice and procedure for hearings under part 80 of this title
45 CFR part 83—Regulation for the administration and enforcement of sections 794 and 855 of the Public Health Services Act
45 CFR part 84—Nondiscrimination on the basis of handicap in programs and activities receiving or benefiting from Federal financial assistance
45 CFR part 86—Nondiscrimination on the basis of sex in education programs and activities receiving or benefiting from Federal financial assistance
45 CFR part 91—Nondiscrimination on the basis of age in HHS programs or activities receiving Federal financial assistance
45 CFR part 93—New restrictions on lobbying

[55 FR 37481, Sept. 12, 1990, as amended at 57 FR 45746, Oct. 5, 1992. Redesignated at 59 FR 63903, Dec. 12, 1994; 61 FR 6129, Feb. 16, 1996]

§ 57.4114 What other audit and inspection requirements apply to grantees?

Each entity which receives a grant under this subpart must meet the requirements of 45 CFR part 74 concerning audit and inspection.

[59 FR 63903, Dec. 12, 1994]

§ 57.4115 Additional conditions.

The Secretary may impose additional conditions on any grant award before or at the time of any award if he or she determines that these conditions are necessary to assure or protect the advancement of the approved activity, the interest of the public health, or the conservation of grant funds.

[55 FR 37481, Sept. 12, 1990. Redesignated at 59 FR 63903, Dec. 12, 1994]

PART 58—GRANTS FOR TRAINING OF PUBLIC HEALTH AND ALLIED HEALTH PERSONNEL

Subparts A–B [Reserved]

Subpart C—Grants for Public Health Traineeships for Students in Schools of Public Health and in Other Graduate Public Health Programs

Sec.
58.201 To what grant program do these regulations apply?
58.202 Definitions.
58.203 Who is eligible to apply for a grant?
58.204 How will applications be evaluated?
58.205 How is the amount of the award determined?
58.206 How long does grant support last?
58.207 For what purposes may grant funds be spent?
58.208 What are the requirements for appointment of trainees?
58.209 Who is eligible for financial assistance as a trainee?
58.210 What financial support is available to trainees?
58.211 Duration of traineeships.
58.212 Termination of traineeships.
58.213 What additional Department regulations apply to grantees?
58.214 What other audit and inspection requirements apply to grantees?
58.215 Additional conditions.

Subpart D—Grants for Health Administration Traineeships and Special Projects Program

58.221 To what grant program do these regulations apply?
58.222 Definitions.
58.223 Who is eligible to apply for a grant?
58.224 How will applications be evaluated?
58.225 How is the amount of the award determined?
58.226 How long does grant support last?
58.227 For what purposes may grant funds be spent?
58.228 Who is eligible for financial assistance as a trainee?
58.229 What financial support is available to trainees?
58.230 Duration of traineeships.
58.231 Termination of traineeships.
58.232 What additional Department regulations apply to grantees?
58.233 What other audit and inspection requirements apply to grantees?
58.234 Additional conditions.

Subparts E–F [Reserved]

Subparts A–B [Reserved]

Subpart C—Grants for Public Health Traineeships for Students in Schools of Public Health and in Other Graduate Public Health Programs

AUTHORITY: Sec. 215 of the Public Health Service Act, 58 Stat. 690, as amended by 63 Stat. 35 (42 U.S.C. 216); sec. 748 of the Public Health Service Act, 90 Stat. 2279, as amended by 91 Stat. 1505; as amended and redesignated as sec. 792 of the Public Health Service Act by 95 Stat. 927 (42 U.S.C. 295h–1b); renumbered as sec. 761, as amended by Pub. L. 102–408, 106 Stat. 2045 (42 U.S.C. 294).

SOURCE: 45 FR 73661, Nov. 6, 1980, unless otherwise noted.

§ 58.201 To what grant program do these regulations apply?

These regulations apply to the award of grants to eligible educational entities under section 761 of the Public Health Service Act (42 U.S.C. 294) to provide funds for traineeships for students enrolled in graduate or specialized training in public health.

[47 FR 54439, Dec. 3, 1982, as amended by 61 FR 6129, Feb. 16, 1996]

§ 58.202 Definitions.

Act means the Public Health Service Act, as amended.

Educational entity means a school, college, or university which is accredited by a body or bodies recognized for this purpose by the Secretary of Education or an institution which provides specialized training in public health.

Fiscal year means the Federal fiscal year, beginning October 1 and ending the following September 30.

Full-time student means a student who is either (1) in a residency program in preventive medicine or dentistry or (2) is enrolled on a full-time basis in a graduate program in public health and who is enrolled for a sufficient number of credit hours in a semester or other academic term to enable the student to complete the course of study within not more than the number of semesters of other academic terms normally required to complete that course of study on a full-time basis at the school in which the student is enrolled.

Graduate program or *graduate training* means a program of education leading to a master's degree or equivalent or doctoral degree or equivalent.

National of the United States means (as defined in the Immigration and Nationality Act at 8 U.S.C. 1101(a)(22)) (1) a citizen of the United States or (2) a person who, though not a citizen of the United States, owes permanent allegiance to the United States.

Nonprofit refers to the status of an entity which is a corporation or association, or is owned and operated by one or more corporations or associations no part of the net earnings of which inures, or may lawfully insure, to the benefit of any private shareholder or individual.

School of Public Health means a public or non-profit private school which provides training leading to a graduate degree in public health or equivalent degree and is accredited according to section 799(1)(E) of the Public Health Service Act.

Secretary means the Secretary of the Department of Health and Human Services or any officer or employee of the Department to whom the authority involved has been delegated.

Specialized training in public health or *specialized training in preventive medicine or denistry* means a residency training program approved by the Liaison Committee on Graduate Medical Education or by the Commission on Dental Accreditation leading to board eligibility in a specialty in preventive medicine or dental public health respectively.

State means, in addition to the several States, the District of Columbia, the Commonwealth of Puerto Rico, the Commonwealth of the Northern Mariana Islands, the Virgin Islands, Guam, American Samoa, the Republic of Palau, the Republic of the Marshall Islands, and the Federated States of Micronesia.

Trainee means a student who is receiving traineeship funds from a grant made under these regulations.

[45 FR 73661, Nov. 6, 1980, as amended at 47 FR 54439, Dec. 3, 1982; 61 FR 6129, Feb. 16, 1996]

§ 58.203 Who is eligible to apply for a grant?

The following are eligible for grants:

(a) Any accredited school of public health which is located in a State; and

(b) Any other public or nonprofit private eduational entity which is located in a State and provides graduate or specialized training in public health. However, no entity of this type may obtain an award under this subpart to support traineeships in health administration, hospital administration, or health policy analysis and planning.[1]

[45 FR 73661, Nov. 6, 1980, as amended at 47 FR 54439, Dec. 3, 1982; 61 FR 6130, Feb. 16, 1996]

§ 58.204 How will applications be evaluated?

(a) The Secretary will award a grant to each eligible school of public health which submits an application containing all the information and assurances requested in the required form and time.

(b) For public and nonprofit educational entities other than schools of public health, the Secretary will decide which applications to approve by considering, among other factors:

(1) The administrative and management ability of the applicant to carry out the proposed project in a cost-effective manner;

(2) The degree of need for the professionals to be trained; and

(3) The adequacy of the staff and faculty; and

(4) Whether the applicant's graduate programs in environmental or occupational health or dietetics and nutrition, or both, meet the requirements in paragraphs § 58.208 (c) and (d).

Within the limits of funds available for competing awards the Secretary will award grants to those approved applicants whose traineeship programs will best promote the purposes of section 761 of the Act.

[45 FR 73661, Nov. 6, 1980, as amended at 47 FR 54439, Dec. 3, 1982; 61 FR 6130, Feb. 16, 1996]

[1] For traineeships in health administration, hospital administration, or health policy analysis and planning, eduational entities which are *not* accredited schools of public health may only apply under section 771 of the Act.

§ 58.205 How is the amount of the award determined?

(a) *Grants to schools of public health.* The Secretary will use a formula to determine the amount of the grant to be awarded to each school of public health with an approved application.

This formula is

$$G = \frac{SS}{TS} \times AF$$

G is the amount of the grant award; SS is the number of eligible full-time and full-time equivalent students of each applicant enrolled in severe shortage occupations targeted for support (epidemiology, environmental health, biostatistics, toxicology, public health nutrition, and maternal and child health); TS is the total number of students enrolled in graduate and specialized training in all schools of public health with approved applications; and AF is the amount of traineeship funds under this program that the Secretary has designated for award to schools of public health for that fiscal year. The Secretary will determine the number of students enrolled in graduate and specialized training in public health at the school (SS) with the formula

$$SS = FTS + \frac{PTC}{9}$$

FTS is the number of full-time students, and PTC is the total number of credit hours in which part-time students are enrolled. If necessary, the figure for

$$\frac{PTC}{9}$$

will be rounded to the next highest number. Students will be counted as of October 15 of the fiscal year in which application is made. The amount of a grant will never exceed the amount requested by the applicant.

(b) *Grants to public and nonprofit private educational entities.* The remaining funds will be available to meet continuation commitments and to award on a competitive basis to eligible public or nonprofit private educational entities other than schools of public health. The Secretary will determine the amount of these awards by estimating the sum necessary during the budget period to cover the tuition, fees, stipends, and allowances (including travel costs approved by the Secretary) for full-time students, and the tuition and fees for part-time students which the applicant proposes to provide to its trainees.

[45 FR 73661, Nov. 6, 1980, as amended at 47 FR 54440, Dec. 3, 1982; 61 FR 6130, Feb. 16, 1996]

§ 58.206 How long does grant support last?

(a) The written notice of grant award specifies the period during which formula grant funds are available for obligation by the grantee, or the period during which the recipient of a competitive grant award need not recompete for funds. This period will not exceed one year for formula grants and 3 years for competitve grants. The period during which recompetition is not necessary is called the project period.

(b) Generally a competitive grant will initially be funded for one year, and subsequent continuation awards will also be for one year at a time. A grantee must submit a separate application to have the support continued for each subsequent year. Decisions regarding continuation awards and the funding levels of these awards will be made after consideration of such factors as the grantee's progress and management practices, and the availability of funds. In all cases, continuation awards require a determination by the Secretary that continued funding is in the best interest of the Federal Government.

(c) Neither the approval of any application nor the award of any grant commits or obligates the Federal Government in any way to make any additional, supplemental, continuation or other award with respect to any approved application or portion of an approved application.

(d) Any balance of federally obligated grant funds remaining unobligated by the grantee at the end of a budget period may be carried forward to the next budget period, for use as prescribed by the Secretary, provided a continuation award is made. If at any time during a budget period it becomes apparent to the Secretary that the amount of Federal funds awarded and available to the grantee for that period, including any unobligated balance carried forward

from prior periods, exceeds the grantee's needs for the period, the Secretary may adjust the amounts awarded by withholding the excess. A budget period is an interval of time (usually 12 months) into which the project period is divided for funding and reporting purposes.

§ 58.207 For what purposes may grant funds be spent?

(a) A grantee shall only spend funds it receives under this subpart according to the approved application and budget, the authorizing legislation, terms and conditions of the grant award, applicable cost principles specified in subpart Q of 45 CFR part 74, and these regulations. Use of grant funds to meet the direct or indirect administrative costs of the training institution is not authorized.

(b) Grantees may not spend grant funds for sectarian instruction or for any religious purpose.

§ 58.208 What are the requirements for appointment of trainees?

(a) The grantee must require each trainee to complete a statement of appointment by the beginning of the training period, or as soon as possible if the trainee receives notice of his or her traineeship appointment after the training period has begun. The program director must sign the statement on behalf of the grantee and the original copy of the statement must be retained by the grantee to be available for program review and financial audit. The grantee must also send a copy of the statement to the Secretary upon request.

(b) The grantee must require full-time trainees to sign a statement that they will not undertake employment during their traineeships which would interfere with their ability to satisfactorily complete the training program in a timely fashion.

(c) The grantee may not require trainees to perform any work which is not an integral part of their training program and required of all students in the program, or to perform services which detract from or prolong their training.

(d) The grantee must advise each trainee who is enrolled in a course of study which requires more than twelve months that continued support under this program is contingent upon the continued availability of grant funds.

(Approved by the Office of Management and Budget under control number 0915–0060)

[45 FR 73661, Nov. 6, 1980, as amended at 47 FR 54440, Dec. 3, 1982; 61 FR 6130, Feb. 16, 1996]

§ 58.209 Who is eligible for financial assistance as a trainee?

(a) To be eligible for a traineeship, an individual must meet the following conditions:

(1) Trainees must be United States citizens, non-citizen nationals, or foreign nationals having in their possession a visa permitting permanent residence in the United States.

(2) New trainees must be pursuing a graduate degree in a health professions field in which there is a severe shortage of health professionals (including the fields of epidemiology, environmental health, biostatistics, toxicology, public health nutrition, and maternal and child health). Ongoing traineeship commitment will be continued.

(3) All trainees must meet the school's admission requirements specified in the approved grant application.

(b) Traineeship support may not be provided to:

(1) Individuals who do not meet the qualifications for admission as specified in the approved application;

(2) Full-time Federal employees unless they are on Leave Without Pay status;

(3) Students pursuing training at the undergraduate level;

(4) Students in programs designed to prepare them for careers in research;

(5) Preventive medicine and dental public health residents (section 763 of the Act may be used for these students); or

(6) Individuals on temporary or student visas.

[61 FR 6130, Feb. 16, 1996]

§ 58.210 What financial support is available to trainees?

(a) Expenditures are limited to:

(1) Tuition and fees, in accordance with the established rates of the institution except as limited by the Secretary.

(2) Stipends, for full time students, in whatever amount the grantee determines that each trainee needs to pursue the training program, as long as that amount does not exceed the limits established by the Secretary.

(3) Transportation allowances on an individual basis when prior approval has been obtained from the Secretary in the following circumstances:

(i) In cases of extreme need, the grantee may pay a trainee an allowance from grant funds for travel from his or her residence to the training site.

(ii) The grantee may pay a trainee an allowance from grant funds for travel to field training if the site is beyond a reasonable commuting distance and requires the trainee to establish a temporary new residence. However, the grantee may not pay an allowance for daily commuting from the new place of residence to the field training headquarters.

(iii) The grantee may pay a trainee an allowance from grant funds for domestic travel to conduct research to meet dissertation requirements.

(b) The grantee may not give a stipend or allowance to a part-time trainee, but may give a traineeship award to pay a part-time trainee's tuition and fees.

§ 58.211 Duration of traineeships.

Traineeships must be for a full academic year, except an appointment for less than a full academic year may be made when the student will complete the program of study at the termination of the appointment, or when joint-degree programs require enrollment at another unit of the grantee institution for part of the academic year. A traineeship may not exceed 12 months in duration. However, consecutive or subsequent traineeship appointments may be made if a student's required program of study exceeds 12 months. Training for which the student receives a traineeship must begin during the period for which funds are made available, but may extend beyond the end of this period.

§ 58.212 Termination of traineeship.

The grantee must terminate a traineeship:

(a) Upon request of the trainee;

(b) If the trainee withdraws from the grantee institution; or

(c) If the grantee determines that

(1) The trainee is no longer an enrolled student; or

(2) The trainee is not eligible or able to continue in attendance in accordance with its standards and practices.

§ 58.213 What additional Department regulations apply to grantees?

Several other regulations apply to grantees. They include, but are not limited to:

42 CFR part 50—subpart D—Public Health Service grant appeals procedure

45 CFR part 16—Procedures of the Departmental Grant Appeals Board

45 CFR part 46—Protection of human subjects

45 CFR part 74—Administration of grants

45 CFR part 80—Nondiscrimination under programs receiving Federal financial assistance through the Department of Health and Human Services effectuation of title VI of the Civil Rights Act of 1964

45 CFR part 81—Practice and procedure for hearings under part 80 of this title

45 CFR part 83—Regulation for the administration and enforcement of sections 794 and 855 of the Public Health Service Act

45 CFR part 84—Nondiscrimination on the basis of handicap in programs and activities receiving or benefiting from Federal financial assistance

45 CFR part 86—Nondiscrimination on the basis of sex in education programs and activities receiving or benefiting from Federal financial assistance

45 CFR part 91—Nondiscrimination on the basis of age in HHS programs or activities receiving Federal financial assistance

45 CFR part 93—New restrictions on lobbying

[49 FR 38116, Sept. 27, 1984, as amended at 61 FR 6130, Feb. 16, 1996]

§ 58.214 What other audit and inspection requirements apply to grantees?

Each entity which receives a grant under this subpart must meet the requirements of 45 CFR part 74 concerning audit and inspection.

[61 FR 6130, Feb. 16, 1996; 61 FR 51020, Sept. 30, 1996]

§ 58.215 Additional conditions.

The Secretary may impose additional conditions in the grant award before or at the time of the award if he or she determines that these conditions are necessary to assure or protect the advancement of the approved activity, the interest of the public health, or the conservation of grant funds.

Subpart D—Grants for Health Administration Traineeships and Special Projects Program

AUTHORITY: Sec. 215 of the Public Health Service Act. 58 Stat. 690, 67 Stat. 631 (42 U.S.C. 216); sec. 749 of the Public Health Service Act, 90 Stat. 2280, Pub. L. 94–484 (42 U.S.C. 294s); redesignated as sec. 791A, amended by 95 Stat. 927, Pub. L. 97–35 and 96 Stat. 2061, Pub. L. 97–414 (42 U.S.C. 295h–1a); renumbered as sec. 771, amended by 106 Stat. 2049, Pub. L. 102–408 (42 U.S.C. 294i).

SOURCE: 45 FR 73658, Nov. 6, 1980, unless otherwise noted.

§ 58.221 To what grant program do these regulations apply?

These regulations apply to the award of grants to eligible educational entities under section 771 of the Public Health Service Act (42 U.S.C. 294i) to provide funds for traineeships for students enrolled in graduate programs in health administration, hospital administration, or health policy analysis and planning.

[45 FR 73658, Nov. 6, 1980, as amended at 49 FR 21535, May 22, 1984; 61 FR 6130, Feb. 16, 1996]

§ 58.222 Definitions.

Act means the Public Health Service Act, as amended.

Educational entity means a school, college, or university which is accredited by a body or bodies recognized for this purpose by the Secretary of Education.

Fiscal year means the Federal fiscal year, beginning October 1 and ending the following September 30.

Full-time student means a student who is enrolled on a full-time basis in a graduate program in health administration, hospital administration, or health policy analysis and planning, and who is enrolled for a sufficient number of credit hours in any semester or other academic term to enable him or her to complete the course of study within not more than the number of semesters or other academic terms normally required to complete that course of study at the school in which the student is enrolled.

Graduate program means a program of education leading to a master's degree or equivalent or a doctoral degree or equivalent.

National of the United States (as defined in 8 U.S.C. 110(a)(22), the Immigration and Nationality Act) means: (1) A citizen of the United States or (2) a person who, though not a citizen of the United States, owes permanent allegiance to the United States.

Nonprofit refers to the status of an entity which is a corporation or association, or is owned and operated by one or more corporations or associations no part of the net earnings of which inures, or may lawfully inure, to the benefit of any private shareholder or individual.

Secretary means the Secretary of the Department of Health and Human Services or any officer or employee of the Department to whom the authority involved has been delegated.

School of public health means a public or private school in a State providing education leading to a graduate degree in public health or an equivalent degree, including advanced training related to public health, which is accredited as provided for in section 799(1)(E) of the Act.

State means, in addition to the several States, the District of Columbia, the Commonwealth of Puerto Rico, the Commonwealth of the Northern Mariana Islands, the Virgin Islands, Guam, American Samoa, the Republic of Palau, the Republic of the Marshall Islands, and the Federated States of Micronesia.

Trainee means a student who is receiving traineeship funds from a grant made under these regulations.

[45 FR 73658, Nov. 6, 1980, as amended at 49 FR 21535, May 22, 1984; 61 FR 6130, Feb. 16, 1996]

§ 58.223 Who is eligible to apply for a grant?

Any public or nonprofit private educational entity (excluding schools of public health) located in a State is eligible to apply for a grant to support traineeships in its graduate program in health administration, hospital administration, or health policy analysis and planning which has been accredited, or is about to be accredited, according to section 799(1)(E) of the Act.

[49 FR 21535, May 22, 1984, as amended at 61 FR 6130, Feb. 16, 1996]

§ 58.224 How will applications be evaluated?

(a) As required by section 798(a) of the Act, each application for a grant under this subpart shall be submitted to a peer review group, composed principally of non-Federal experts, for an evaluation of the merits of the proposals made in the application. The Secretary may not approve such an application unless a peer review group has recommended the application for approval.

(b) The following criteria will be used for review of applications:

(1) The administrative and management ability of the applicant to carry out the proposed project in a cost-effective manner;

(2) The adequacy of the staff and faculty;

(3) The adequacy of institutional resources available to conduct graduate level education, to include the adequacy of teaching facilities;

(4) The adequacy of recruitment and placement assistance for students in accord with the legislative purpose and intent; and

(5) The extent to which the application justifies the purpose, scope, and need for traineeship and or special project grant.

(Approved by the Office of Management and Budget under control number 0915–0060)

[61 FR 6130, Feb. 16, 1996]

§ 58.225 How is the amount of the award determined?

The Secretary will use a formula to determine the amount of the grant award for each entity with an approved application. This formula is:

$$G = \frac{SS}{TS} \times AF$$

G is the amount of the grant award; SS is the number of students enrolled in approved graduate programs in health administration, hospital administration, or health policy analysis and planning at the school; TS is the total number of students in these programs at all schools with approved applications, and AF is the amount of available funds authorized under section 771 for traineeships in a given fiscal year. The Secretary will determine the number of students enrolled in these programs at the school (SS) with the formula:

$$SS = FTS + \frac{PTC}{9}$$

FTS is the number of full-time students enrolled in these programs and PTC is the total number of credit hours in which part-time students are enrolled. If necessary, the figure for PTC/9 will be rounded to the next highest number. Students will be counted as of October 15 of the fiscal year in which application is made. The amount of a grant will never exceed the amount requested by the applicant.

[45 FR 73658, Nov. 6, 1980, as amended at 49 FR 21536, May 22, 1984; 61 FR 6131, Feb. 16, 1996]

§ 58.226 How long does grant support last?

(a) The notice of grant award specifies the period during which funds are available for obligation by the grantee. This period will not exceed one year. If at any time during the period of the grant it becomes apparent to the Secretary that the amount of Federal funds awarded and available to the grantee for that period, exceeds the grantee's needs for that period, the Secretary may adjust the amounts awarded by withdrawing the excess.

(b) Neither the approval of any application nor the award of any grant commits or obligates the Federal Government in any way to make any additional, supplemental, continuation or other award with respect to any approved application or portion of an approved application.

§ 58.227 For what purposes may grant funds be spent?

(a) A grantee shall only spend funds it receives under this subpart according to the approved application and budget, the authorizing legislation, terms and conditions of the grant award, applicable cost principles in subpart Q of 45 CFR part 74, and these regulations. Use of traineeship funds to meet the direct or indirect administrative costs of the training institution is not authorized.

(b) Grantees may not spend grant funds for sectarian instruction or for any religious purpose.

§ 58.228 Who is eligible for financial assistance as a trainee?

To be eligible for a traineeship, an individual must meet the following conditions:

(a) The individual must be a resident of the United States and either a citizen or national of the United States, an alien lawfully admitted for permanent residence in the United States, a citizen of the Commonwealth of the Northern Mariana Islands, a citizen of the Republic of Palau, a citizen of the Republic of the Marshall Islands or a citizen of the Federated States of Micronesia.

(b) The individual must be accepted for enrollment, or be enrolled in a grantee's accredited graduate program in health administration, hospital administration, or health policy analysis and planning;

(c) The individual may not be receiving concurrent support for the same training from another Federal source except education benefits under the Veteran's Readjustment Benefits Act.

[45 FR 73658, Nov. 6, 1980, as amended at 49 FR 21536, May 22, 1984. Redesignated and amended at 61 FR 6131, Feb. 16, 1996]

§ 58.229 What financial support is available to trainees?

(a) The grantee may use grant funds to pay for:

(1) Tuition and fees, in accordance with the established rates of the institution except as limited by the Secretary;

(2) Stipends, for full time trainees in whatever amount the grantee determines that each trainee needs to pursue the training program, as long as that amount does not exceed the limits established by the Secretary;

(3) Transportation allowances on an individual basis when prior approval has been obtained from the Secretary in the following circumstances:

(i) In cases of extreme need, the grantee may pay a trainee an allowance from grant funds for travel from his or her residence to the training site.

(ii) The grantee may pay a trainee an allowance from grant funds for travel to field training if the site is beyond a reasonable commuting distance and requires the trainee to establish a temporary new residence. However, the grantee may not pay an allowance for daily commuting from the new place of residence to the field training headquarters.

(iii) The grantee may pay a trainee an allowance from grant funds for domestic travel to conduct research to meet dissertation requirements.

(b) The grantee may not give a stipend or allowance to a part-time trainee, but may give a traineeship award to pay a part-time trainee's tuition and fees.

[45 FR 73658, Nov. 6, 1980. Redesignated at 61 FR 6131, Feb. 16, 1996]

§ 58.230 Duration of traineeships.

A traineeship must be for a full academic year except that an appointment for less than a full academic year may be made to a student who will complete his or her program of study in a lesser time or when joint-degree programs require enrollment at another unit of the grantee institution for part of the academic year. A traineeship may not exceed 12 months in duration. However a grantee may make consecutive or subsequent traineeship appointments to students whose required program of study exceeds 12 months. The training for which a student receives a traineeship must begin during the period for which funds are made available, but may extend beyond that period.

[45 FR 73658, Nov. 6, 1980. Redesignated at 61 FR 6131, Feb. 16, 1996]

§ 58.231 Termination of traineeships.

The grantee must terminate a traineeship:

(a) Upon request of the trainee;

(b) If the trainee withdraws from the grantee institution; or

(c) If the grantee determines that:

(1) The trainee is no longer an enrolled student; or

(2) The trainee is not eligible or able to continue in attendance in accordance with its standards and practices.

[45 FR 73658, Nov. 6, 1980. Redesignated at 61 FR 6131, Feb. 16, 1996]

§ 58.232 What additional Department regulations apply to grantees?

Several other Department regulations apply to grantees. They include, but are not limited to:

42 CFR part 50, subpart D—Public Health Service grant appeals procedure
45 CFR part 16—Procedures of the Departmental Grant Appeals Board
45 CFR part 46—Protection of human subjects
45 CFR part 74—Administration of grants
45 CFR part 80—Nondiscrimination under programs receiving Federal assistance through the Department of Health and Human Services effectuation of title VI of the Civil Rights Act of 1964
45 CFR part 81—Practice and procedure for hearings under part 80 of this title
45 CFR part 83—Regulation for the administration and enforcement of sections 794 and 855 of the Public Health Service Act
45 CFR part 84—Nondiscrimination on the basis of handicap in programs and activities receiving or benefiting from Federal financial assistance
45 CFR part 86—Nondiscrimination on the basis of sex in education programs and activities receiving or benefiting from Federal financial assistance
45 CFR part 91—Nondiscrimination on the basis of age in HHS programs or activities receiving Federal financial assistance
45 CFR part 93—New restrictions on lobbying

[49 FR 38116, Sept. 27, 1984. Redesignated and amended at 61 FR 6131, Feb. 16, 1996]

§ 58.233 What other audit and inspection requirements apply to grantees?

Each entity which receives a grant under this subpart must meet the requirements of 45 CFR part 74 concerning audit and inspection.

[61 FR 6131, Feb. 16, 1996; 61 FR 51020, Sept. 30, 1996]

§ 58.234 Additional conditions.

The Secretary may impose additional conditions in the grant award before or at the time of the award if he or she determines that these conditions are necessary to assure or protect the advancement of the approved activity, the interest of the public health, or the conservation of grant funds.

[45 FR 73658, Nov. 6, 1980. Redesignated at 61 FR 6131, Feb. 16, 1996]

Subparts E–F [Reserved]

PART 59—GRANTS FOR FAMILY PLANNING SERVICES

Subpart A—Project Grants for Family Planning Services

Sec.
59.1 To what programs do these regulations apply?
59.2 Definitions.
59.3 Who is eligible to apply for a family planning services grant?
59.4 How does one apply for a family planning services grant?
59.5 What requirements must be met by a family planning project?
59.6 What procedures apply to assure the suitability of informational and educational material?
59.7 Standards of compliance with prohibition on abortion.
59.8 Prohibition on counseling and referral for abortion services; limitation of program services to family planning.
59.9 Maintenance of program integrity.
59.10 Prohibition on activities that encourage, promote or advocate abortion.
59.11 What criteria will the Department of Health and Human Services (HHS) use to decide which family planning services projects to fund and in what amount?
59.12 How is a grant awarded?
59.13 For what purposes may grant funds be used?
59.14 What other HHS regulations apply to grants under this subpart?
59.15 Confidentiality.
59.16 Inventions or discoveries.
59.17 Additional conditions.

Subpart B [Reserved]

Subpart C—Grants for Family Planning Service Training

59.201 Applicability.
59.202 Definitions.
59.203 Eligibility.
59.204 Application for a grant.

59.205 Project requirements.
59.206 Evaluation and grant award.
59.207 Payments.
59.208 Use of project funds.
59.209 Civil rights.
59.210 Inventions or discoveries.
59.211 Publications and copyright.
59.212 Grantee accountability.
59.213 [Reserved]
59.214 Additional conditions.
59.215 Applicability of 45 CFR part 74.

Subpart A—Project Grants for Family Planning Services

AUTHORITY: 42 U.S.C. 300a–4.

SOURCE: 45 FR 37436, June 3, 1980, unless otherwise noted.

EDITORIAL NOTE: At 58 FR 7462–7463, Feb. 5, 1993, the Secretary of Health and Human Services (HHS) suspended the effectiveness of the provisions of Subpart A issued at 53 FR 2922, Feb. 2, 1988. The actions taken on Feb. 2, 1988, were:

1. The authority citation for subpart A of 42 CFR part 59 is revised.

2. In 42 CFR 59.2, the following definitions are added:

Family planning

Grantee

Prenatal care

Program and *project*

Title X

Title X program and *Title X project*

3. In 42 CFR 59.5(a), paragraph (a)(5) is removed and paragraphs (a)(6) through (a)(11) are redesignated as paragraphs (a)(5) through (a)(10), respectively.

4. 42 CFR 59.5(b)(3)(i) is revised.

5. In 42 CFR part 59, § 59.7 through § 59.13 are redesignated as § 59.11 through § 59.17 respectively, and new § 59.7 through § 59.10 are added.

6. In addition to the amendments set forth above, in 42 CFR part 59 remove the words ''project'' or ''projects'' or ''project's'' and add in their place, the words ''Title X project'' or ''Title X projects'' or ''Title X project's'' respectively, in the following places:

(a) Section 59.2 definition of ''low income family'';
(b) Section 59.5(a)(1);
(c) Section 59.5(b) introductory text;
(d) Section 59.5(b)(3)(iii);
(e) Section 59.5(b)(4);
(f) Section 59.5(b)(7);
(g) Section 59.5(b)(10);
(h) Section 59.6(a);
(i) Newly redesignated § 59.11(a);
(k) Newly redesignated § 59.11(a)(7);
(l) Newly redesignated § 59.11(b);
(m) Newly redesignated § 59.11(c);
(n) Newly redesignated § 59.12(a), the first time it appears;
(o) Newly redesignated § 59.15;
(p) Newly redesignated § 59.16(a).

§ 59.1 To what programs do these regulations apply?

The regulations of this subpart are applicable to the award of grants under section 1001 of the Public Health Service Act (42 U.S.C. 300) to assist in the establishment and operation of voluntary family planning projects. These projects shall consist of the educational, comprehensive medical, and social services necessary to aid individuals to determine freely the number and spacing of their children.

§ 59.2 Definitions.

As used in this subpart:

Act means the Public Health Service Act, as amended.

Family means a social unit composed of one person, or two or more persons living together, as a household.

Family planning means the process of establishing objectives for the number and spacing of one's children and selecting the means by which those objectives may be achieved. These means include a broad range of acceptable and effective methods and services to limit or enhance fertility, including contraceptive methods (including natural family planning and abstinence) and the management of infertility (including adoption). Family planning services includes preconceptional counseling, education, and general reproductive health care (including diagnosis and treatment of infections which threaten reproductive capability). Family planning does not include pregnancy care (including obstetric or prenatal care). As required by section 1008 of the Act, abortion may not be included as a method of family planning in the title X project. Family planning, as supported under this subpart, should reduce the incidence of abortion.

Grantee means the organization to which a grant is awarded under section 1001 of the Act.

Low income family means a family whose total annual income does not exceed 100 percent of the most recent Community Services Administration

Income Poverty Guidelines (45 CFR 1060.2). *Low-income family* also includes members of families whose annual family income exceeds this amount, but who, as determined by the title X project director, are unable, for good reasons, to pay for family planning services. For example, unemancipated minors who wish to receive services on a confidential basis must be considered on the basis of their own resources.

Nonprofit, as applied to any private agency, institution, or organization, means that no part of the entity's net earnings benefit, or may lawfully benefit, any private shareholder or individual.

Prenatal care means medical services provided to a pregnant woman to promote maternal and fetal health.

Program and *project* are used interchangeably and mean a coherent assembly of plans, activities and supporting resources contained within an administrative framework.

Secretary means the Secretary of Health and Human Services and any other officer or employee of the Department of Health and Human Services to whom the authority involved has been delegated.

State means one of the 50 States, the District of Columbia, Puerto Rico, Guam, the Virgin Islands, American Samoa, Northern Marianas, or the Trust Territory of the Pacific Islands.

Title X means title X of the Act, 42 U.S.C. 300, *et seq.*

Title X program and *title X project* are used interchangeably and mean the identified program which is approved by the Secretary for support under section 1001 of the Act, as the context may require. Title X project funds include all funds allocated to the title X program, including but not limited to grant funds, grant-related income or matching funds.

[45 FR 37436, June 3, 1980, as amended at 48 FR 3614, Jan, 26, 1983; 49 FR 38118, Sept. 27, 1984; 53 FR 2944, 2946, Feb. 2, 1988]

EDITORIAL NOTE: For provisions of §59.2 which have been suspended, see the EDITORIAL NOTE following the SOURCE of Subpart A.

§59.3 Who is eligible to apply for a family planning services grant?

Any public or nonprofit private entity in a State may apply for a grant under this subpart.

§59.4 How does one apply for a family planning services grant?

(a) Application for a grant under this subpart shall be made on an authorized form.

(b) An individual authorized to act for the applicant and to assume on behalf of the applicant the obligations imposed by the terms and conditions of the grant, including the regulations of this subpart, must sign the application.

(c) The application shall contain—

(1) A description, satisfactory to the Secretary, of the project and how it will meet the requirements of this subpart;

(2) A budget and justification of the amount of grant funds requested;

(3) A description of the standards and qualifications which will be required for all personnel and for all facilities to be used by the project; and

(4) Such other pertinent information as the Secretary may require.

§59.5 What requirements must be met by a family planning project?

(a) Each project supported under this part must:

(1) Provide a broad range of acceptable and effective medically approved family planning methods (including natural family planning methods) and services (including infertility services and services for adolescents). If an organization offers only a single method of family planning, such as natural family planning, it may participate as part of a title X project as long as the entire title X project offers a broad range of family planning services.

(2) Provide services without subjecting individuals to any coercion to accept services or to employ or not to employ any particular methods of family planning. Acceptance of services must be solely on a voluntary basis and may not be made a prerequisite to eligibility for, or receipt of, any other

service, assistance from or participation in any other program of the applicant.[1]

(3) Provide services in a manner which protects the dignity of the individual.

(4) Provide services without regard to religion, race, color, national origin, handicapping condition, age, sex, number of pregnancies, or marital status.

(5) Provide that priority in the provision of services will be given to persons from low-income families.

(6) Provide that no charge will be made for services provided to any person from a low-income family except to the extent that payment will be made by a third party (including a Government agency) which is authorized to or is under legal obligation to pay this charge.

(7) Provide that charges will be made for services to persons other than those from low-income families in accordance with a schedule of discounts based on ability to pay, except that charges to persons from families whose annual income exceeds 250 percent of the levels set forth in the most recent CSA Income Poverty Guidelines (45 CFR 1060.2) will be made in accordance with a schedule of fees designed to recover the reasonable cost of providing services.

(8) If a third party (including a Government agency) is authorized or legally obligated to pay for services, all reasonable efforts must be made to obtain the third-party payment without application of any discounts. Where the cost of services is to be reimbursed under title XIX or title XX of the Social Security Act, a written agreement with the title XIX or title XX agency is required.

(9)(i) Provide that if an application relates to consolidation of service areas or health resources or would otherwise affect the operations of local or regional entities, the applicant must document that these entities have been given, to the maximum feasible extent, an opportunity to participate in the development of the application. Local and regional entities include existing or potential subgrantees which have previously provided or propose to provide family planning services to the area proposed to be served by the applicant.

(ii) Provide an opportunity for maximum participation by existing or potential subgrantees in the ongoing policy decisionmaking of the project.

(10) Provide for an Advisory Committee as required by § 59.6.

(b) In addition to the requirements of paragraph (a) of this section, each title X project must meet each of the following requirements unless the Secretary determines that the title X project has established good cause for its omission. Each title X project must:

(1) Provide for medical services related to family planning (including physician's consultation, examination prescription, and continuing supervision, laboratory examination, contraceptive supplies) and necessary referral to other medical facilities when medically indicated, and provide for the effective usage of contraceptive devices and practices.

(2) Provide for social services related to family planning, including counseling, referral to and from other social and medical service agencies, and any ancillary services which may be necessary to facilitate clinic attendance.

(3) Provide for informational and educational programs designed to (i) achieve community understanding of the objectives of the title X program, (ii) inform the community of the availability of services, and (iii) promote continued participation in the title X project by persons to whom family planning services may be beneficial.

(4) Provide for orientation and in-service training for all title X project personnel.

[1] Section 205 of Pub. L. 94–63 states: ''Any (1) officer or employee of the United States, (2) officer or employee of any State, political subdivision of a State, or any other entity, which administers or supervises the administration of any program receiving Federal financial assistance, or (3) person who receives, under any program receiving Federal assistance, compensation for services, who coerces or endeavors to coerce any person to undergo an abortion or sterilization procedure by threatening such person with the loss of, or disqualification for the receipt of, any benefit or service under a program receiving Federal financial assistance shall be fined not more than $1,000 or imprisoned for not more than one year, or both.''

(5) Provide services without the imposition of any durational residency requirement or requirement that the patient be referred by a physician.

(6) Provide that family planning medical services will be performed under the direction of a physician with special training or experience in family planning.

(7) Provide that all services purchased for title X project participants will be authorized by the title X project director or his designee on the title X project staff.

(8) Provide for coordination and use of referral arrangements with other providers of health care services, local health and welfare departments, hospitals, voluntary agencies, and health services projects supported by other Federal programs.

(9) Provide that if family planning services are provided by contract or other similar arrangements with actual providers of services, services will be provided in accordance with a plan which establishes rates and methods of payment for medical care. These payments must be made under agreements with a schedule of rates and payment procedures maintained by the grantee. The grantee must be prepared to substantiate that these rates are reasonable and necessary.

(10) Provide, to the maximum feasible extent, an opportunity for participation in the development, implementation, and evaluation of the title X project by persons broadly representative of all significant elements of the population to be served, and by others in the community knowledgeable about the community's needs for family planning services.

(Sec. 215, Public Health Service Act, 58 Stat. 690, 42 U.S.C. 216; sec. 1006(a), Public Health Service Act, 84 Stat. 1507, 42 U.S.C. 300a–4(a); sec. 931(b)(1) of Pub. L. 97–35, 95 Stat. 570, 42 U.S.C. 300(a))

[45 FR 37436, June 3, 1980, as amended at 49 FR 38118, Sept. 27, 1984; 53 FR 2944, 2946, Feb. 2, 1988]

EDITORIAL NOTE: For provisions of §59.5 which have been suspended, see the EDITORIAL NOTE following the SOURCE of Subpart A.

§59.6 What procedures apply to assure the suitability of informational and educational material?

(a) A grant under this section may be made only upon assurances satisfactory to the Secretary that the title X project shall provide for the review and approval of informational and educational materials developed or made available under the title X project by an Advisory Committee prior to their distribution, to assure that the materials are suitable for the population or community to which they are to be made available and the purposes of title X of the Act. The title X project shall not disseminate any such materials which are not approved by the Advisory Committee.

(b) The Advisory Committee referred to in paragraph (a) of this section shall be established as follows:

(1) *Size.* The Committee shall consist of no fewer than five but not more than nine members, except that this provision may be waived by the Secretary for good cause shown.

(2) *Composition.* The Committee shall include individuals broadly representative (in terms of demographic factors such as race, color, national origin, handicapped condition, sex, and age) of population or community for which the materials are intended.

(3) *Function.* In reviewing materials, the Advisory Committee shall:

(i) Consider the educational and cultural backgrounds of individuals to whom the materials are addressed;

(ii) Consider the standards of the population or community to be served with respect to such materials;

(iii) Review the content of the material to assure that the information is factually correct;

(iv) Determine whether the material is suitable for the population or community to which it is to be made available; and

(v) Establish a written record of its determinations.

[45 FR 37436, June 3, 1980, as amended at 53 FR 2946, Feb. 2, 1988]

EDITORIAL NOTE: For provisions of §59.6 which have been suspended, see the EDITORIAL NOTE following the SOURCE of Subpart A.

§ 59.7 Standards of compliance with prohibition on abortion.

A project may not receive funds under this subpart unless it provides assurance satisfactory to the Secretary that it does not include abortion as a method of family planning. Such assurance must include, as a minimum, representations (supported by such documentation as the Secretary may request) as to compliance with each of the requirements in § 59.8 through § 59.10. A project must comply with such requirements at all times during the period for which support under title X is provided.

[53 FR 2944, Feb. 2, 1988]

EDITORIAL NOTE: For provisions of § 59.7 which have been suspended, see the EDITORIAL NOTE following the SOURCE of Subpart A.

§ 59.8 Prohibition on counseling and referral for abortion services; limitation of program services to family planning.

(a)(1) A title X project may not provide counseling concerning the use of abortion as a method of family planning or provide referral for abortion as a method of family planning.

(2) Because title X funds are intended only for family planning, once a client served by a title X project is diagnosed as pregnant, she must be referred for appropriate prenatal and/or social services by furnishing a list of available providers that promote the welfare of mother and unborn child. She must also be provided with information necessary to protect the health of mother and unborn child until such time as the referral appointment is kept. In cases in which emergency care is required, however, the title X project shall be required only to refer the client immediately to an appropriate provider of emergency medical services.

(3) A title X project may not use prenatal, social service or emergency medical or other referrals as an indirect means of encouraging or promoting abortion as a method of family planning, such as by weighing the list of referrals in favor of health care providers which perform abortions, by including on the list of referral providers health care providers whose principal business is the provision of abortions, by excluding available providers who do not provide abortions, or by ''steering'' clients to providers who offer abortion as a method of family planning.

(4) Nothing in this subpart shall be construed as prohibiting the provision of information to a project client which is medically necessary to assess the risks and benefits of different methods of contraception in the course of selecting a method; *provided,* that the provision of this information does not include counseling with respect to or otherwise promote abortion as a method of family planning.

(b) *Examples.* (1) A pregnant client of a title X project requests prenatal care services, which project personnel are qualified to provide. Because the provision of such services is outside the scope of family planning supported by title X, the client must be referred to appropriate providers of prenatal care.

(2) A title X project discovers an ectopic pregnancy in the course of conducting a physical examination of a client. Referral arrangements for emergency medical care are immediately provided. Such action is in compliance with the requirements of paragraph (a)(2) of this section.

(3) A pregnant woman asks the title X project to provide her with a list of abortion providers in the area. The title X project tells her that it does not refer for abortion but provides her a list which includes, among other health care providers, a local clinic which principally provides abortions. Inclusion of the clinic on the list is inconsistent with paragraph (a)(3) of this section.

(4) A pregnant woman asks the title X project to provide her with a list of abortion providers in the area. The project tells her that it does not refer for abortion and provides her a list which consists of hospitals and clinics and other providers which provide prenatal care and also provide abortions. None of the entries on the list are providers that principally provide abortions. Although there are several appropriate providers of prenatal care in the area which do not provide or refer for abortions, none of these providers are included on the list. Provision of the list is inconsistent with paragraph (a)(3) of this section.

(5) A pregnant woman requests information on abortion and asks the title X project to refer her to an abortion provider. The project counselor tells her that the project does not consider abortion an appropriate method of family planning and therefore does not counsel or refer for abortion. The counselor further tells the client that the project can help her to obtain prenatal care and necessary social services, and provides her with a list of such providers from which the client may choose. Such actions are consistent with paragraph (a) of this section.

(6) Title X project staff provide contraceptive counseling to a client in order to assist her in selecting a contraceptive method. In discussing oral contraceptives, the project counselor provides the client with information contained in the patient package insert accompanying a brand of oral contraceptives, referring to abortion only in the context of a discussion of the relative safety of various contraceptive methods and in no way promoting abortion as a method of family planning. The provision of this information does not constitute abortion counseling or referral.

[53 FR 2945, Feb. 2, 1988]

EDITORIAL NOTE: For provisions of §59.8 which have been suspended, see the EDITORIAL NOTE following the SOURCE of Subpart A.

§59.9 Maintenance of program integrity.

A title X project must be organized so that it is physically and financially separate, as determined in accordance with the review established in this section, from activities which are prohibited under section 1008 of the Act and §59.8 and §59.10 of these regulations from inclusion in the title X program. In order to be physically and financially separate, a title X project must have an objective integrity and independence from prohibited activities. Mere bookkeeping separation of title X funds from other monies is not sufficient. The Secretary will determine whether such objective integrity and independence exist based on a review of facts and circumstances. Factors relevant to this determination shall include (but are not limited to):

(a) The existence of separate accounting records;

(b) The degree of separation from facilities (*e.g.*, treatment, consultation, examination, and waiting rooms) in which prohibited activities occur and the extent of such prohibited activities;

(c) The existence of separate personnel;

(d) The extent to which signs and other forms of identification of the title X project are present and signs and material promoting abortion are absent.

[53 FR 2945, Feb. 2, 1988]

EDITORIAL NOTE: For provisions of §59.9 which have been suspended, see the EDITORIAL NOTE following the SOURCE of Subpart A.

§59.10 Prohibition on activities that encourage, promote or advocate abortion.

(a) A title X project may not encourage, promote or advocate abortion as a method of family planning. This requirement prohibits actions to assist women to obtain abortions or increase the availability or accessibility of abortion for family planning purposes. Prohibited actions include the use of title X project funds for the following:

(1) Lobbying for the passage of legislation to increase in any way the availability of abortion as a method of family planning;

(2) Providing speakers to promote the use of abortion as a method of family planning;

(3) Paying dues to any group that as a significant part of its activities advocates abortion as a method of family planning;

(4) Using legal action to make abortion available in any way as a method of family planning; and

(5) Developing or disseminating in any way materials (including printed matter and audiovisual materials) advocating abortion as a method of family planning.

(b) *Examples.* (1) Clients at a title X project are given brochures advertising an abortion clinic. Provision of the brochure violates paragraph (a) of this section.

(2) A title X project makes an appointment for a pregnant client with

an abortion clinic. The title X project has violated paragraph (a) of this section.

(3) A title X project pays dues to a state association which, among other activities, lobbies at state and local levels for the passage of legislation to protect and expand the legal availability of abortion as a method of family planning. The association spends a significant amount of its annual budget on such activity. Payment of dues to the association violates paragraph (a)(3) of this section.

(4) An organization conducts a number of activities, including operating a title X project. The organization uses non-project funds to pay dues to an association which, among other activities, engages in lobbying to protect and expand the legal availability of abortion as a method of family planning. The association spends a significant amount of its annual budget on such activity. Payment of dues to the association by the organization does not violate paragraph (a)(3) of this section.

(5) An organization that operates a title X project engages in lobbying to increase the legal availability of abortion as a method of family planning. The project itself engages in no such activities and the facilities and funds of the project are kept separate from prohibited activities. The project is not in violation of paragraph (a)(1) of this section.

(6) Employees of a title X project write their legislative representatives in support of legislation seeking to expand the legal availability of abortion, using no project funds to do so. The title X project has not violated paragraph (a)(1) of this section.

(7) On her own time and at her own expense, a title X project employee speaks before a legislative body in support of abortion as a method of family planning. The title X project has not violated paragraph (a) of this section.

[53 FR 2945, Feb. 2, 1988]

EDITORIAL NOTE: For provisions of § 59.10 which have been suspended, see the EDITORIAL NOTE following the SOURCE of Subpart A.

§ 59.11 What criteria will the Department of Health and Human Services use to decide which family planning services projects to fund and in what amount?

(a) Within the limits of funds available for these purposes, the Secretary may award grants for the establishment and operation of those title X projects which will in the Department's judgment best promote the purposes of section 1001 of the Act, taking into account:

(1) The number of patients and, in particular, the number of low-income patients to be served;

(2) The extent to which family planning services are needed locally;

(3) The relative need of the applicant;

(4) The capacity of the applicant to make rapid and effective use of the Federal assistance;

(5) The adequacy of the applicant's facilities and staff;

(6) The relative availability of non-Federal resources within the community to be served and the degree to which those resources are committed to the project; and

(7) The degree to which the title X project plan adequately provides for the requirements set forth in these regulations.

(b) The Secretary shall determine the amount of any award on the basis of his estimate of the sum necessary for the performance of the title X project. No grant may be made for less than 90 percent of the title X project's costs, as so estimated, unless the grant is to be made for a title X project which was supported, under section 1001, for less than 90 percent of its costs in fiscal year 1975. In that case, the grant shall not be for less than the percentage of costs covered by the grant in fiscal year 1975.

(c) No grant may be made for an amount equal to 100 percent of the title X project's estimated costs.

[45 FR 37436, June 3, 1980. Redesignated and amended at 53 FR 2944, 2946, Feb. 2, 1988]

EDITORIAL NOTE: For provisions of § 59.11 which have been suspended, see the EDITORIAL NOTE following the SOURCE of Subpart A.

§ 59.12 How is a grant awarded?

(a) The notice of grant award specifies how long HHS intends to support the title X project without requiring the project to recompete for funds. This period, called the project period, will usually be for 3 to 5 years.

(b) Generally the grant will initially be for 1 year and subsequent continuation awards will also be for 1 year at a time. A grantee must submit a separate application to have the support continued for each subsequent year. Decisions regarding continuation awards and the funding level of such awards will be made after consideration of such factors as the grantee's progress and management practices, and the availability of funds. In all cases, continuation awards require a determination by HHS that continued funding is in the best interest of the Government.

(c) Neither the approval of any application nor the award of any grant commits or obligates the United States in any way to make any additional, supplemental, continuation, or other award with respect to any approved application or portion of an approved application.

[45 FR 37436, June 3, 1980. Redesignated and amended at 53 FR 2944, 2946, Feb. 2, 1988]

EDITORIAL NOTE: For provisions of § 59.12 which have been suspended, see the EDITORIAL NOTE following the SOURCE of Subpart A.

§ 59.13 For what purpose may grant funds be used?

Any funds granted under this subpart shall be expended solely for the purpose for which the funds were granted in accordance with the approved application and budget, the regulations of this subpart, the terms and conditions of the award, and the applicable cost principles prescribed in subpart Q of 45 CFR part 74.

[45 FR 37436, June 3, 1980. Redesignated at 53 FR 2944, Feb. 2, 1988]

EDITORIAL NOTE: For provisions of § 59.13 which have been suspended, see the EDITORIAL NOTE following the SOURCE of Subpart A.

§ 59.14 What other HHS regulations apply to grants under this subpart?

Attention is drawn to the following HHS Department-wide regulations which apply to grants under this subpart: These include:

42 CFR part 50, subpart D—Public Health Service grant appeals procedure
42 CFR part 122, subpart E—Health Systems Agency review of certain proposed uses of Federal health funds
45 CFR part 16—Procedures of the Departmental Grant Appeals Board
45 CFR part 19—Limitations on payment or reimbursement for drugs
45 CFR part 74—Administration of grants
45 CFR part 80—Nondiscrimination under programs receiving Federal assistance through the Department of Health and Human Services effectuation of title VI of the Civil Rights Act of 1964
45 CFR part 81—Practice and procedure for hearings under part 80 of this title
45 CFR part 84—Nondiscrimination on the basis of handicap in programs and activities receiving or benefiting from Federal financial assistance
45 CFR part 91—Nondiscrimination on the basis of age in HHS programs or activities receiving Federal financial assistance

[49 FR 38116, Sept. 27, 1984. Redesignated at 53 FR 2944, Feb. 2, 1988]

EDITORIAL NOTE: For provisions of § 59.14 which have been suspended, see the EDITORIAL NOTE following the SOURCE of Subpart A.

§ 59.15 Confidentiality.

All information as to personal facts and circumstances obtained by the title X project staff about individuals receiving services must be held confidential and must not be disclosed without the individual's consent, except as may be necessary to provide services to the patient or as required by law, with appropriate safeguards for confidentiality. Otherwise, information may be disclosed only in summary, statistical, or other form which does not identify particular individuals.

[45 FR 37436, June 3, 1980. Redesignated and amended at 53 FR 2944, 2946, Feb. 2, 1988]

EDITORIAL NOTE: For provisions of § 59.15 which have been suspended, see the EDITORIAL NOTE following the SOURCE of Subpart A.

§ 59.16 Inventions or discoveries.

(a) A title X project grant award is subject to the regulations of HHS as set forth in 45 CFR parts 6 and 8, as amended. These regulations shall apply to any activity of the title X project for which grant funds are used, whether the activity is part of an approved title X project or is an unexpected by-product of that title X project.

(b) The grantee and the Secretary shall take appropriate measures to assure that no contracts, assignments, or other arrangements inconsistent with the grant obligation are continued or entered into and that all personnel involved in the grant activity are aware of and comply with such obligations.

[45 FR 37436, June 3, 1980. Redesignated and amended at 53 FR 2944, 2946, Feb. 2, 1988]

EDITORIAL NOTE: For provisions of § 59.16 which have been suspended, see the EDITORIAL NOTE following the SOURCE of Subpart A.

§ 59.17 Additional conditions.

The Secretary may, with respect to any grant, impose additional conditions prior to or at the time of any award, when in the Department's judgment these conditions are necessary to assure or protect advancement of the approved program, the interests of public health, or the proper use of grant funds.

[45 FR 37436, June 3, 1980. Redesignated at 53 FR 2944, Feb. 2, 1988]

EDITORIAL NOTE: For provisions of § 59.17 which have been suspended, see the EDITORIAL NOTE following the SOURCE of Subpart A.

Subpart B [Reserved]

Subpart C—Grants for Family Planning Service Training

AUTHORITY: Sec. 6(c), 84 Stat. 1507, 42 U.S.C. 300a–4; sec. 6(c), 84 Stat. 1507, 42 U.S.C. 300a–1.

SOURCE: 37 FR 7093, Apr. 8, 1972, unless otherwise noted.

§ 59.201 Applicability.

The regulations in this subpart are applicable to the award of grants pursuant to section 1003 of the Public Health Service Act (42 U.S.C. 300a–1) to provide the training for personnel to carry out family planning service programs described in sections 1001 and 1002 of the Public Health Service Act (42 U.S.C. 300, 300a).

§ 59.202 Definitions.

As used in this subpart:

(a) *Act* means the Public Health Service Act.

(b) *State* means one of the 50 States, the District of Columbia, Puerto Rico, Guam, the Virgin Islands, American Samoa, or the Trust Territory of the Pacific Islands.

(c) *Nonprofit* private entity means a private entity no part of the net earnings of which inures, or may lawfully inure, to the benefit of any private shareholder or individual.

(d) *Secretary* means the Secretary of Health and Human Services and any other officer or employee of the Department of Health and Human Services to whom the authority involved has been delegated.

(e) *Training* means job-specific skill development, the purpose of which is to promote and improve the delivery of family planning services.

§ 59.203 Eligibility.

(a) *Eligible applicants.* Any public or nonprofit private entity located in a State is eligible to apply for a grant under this subpart.

(b) *Eligible projects.* Grants pursuant to section 1003 of the Act and this subpart may be made to eligible applicants for the purpose of providing programs, not to exceed three months in duration, for training family planning or other health services delivery personnel in the skills, knowledge, and attitudes necessary for the effective delivery of family planning services: *Provided,* That the Secretary may in particular cases approve support of a program whose duration is longer than three months where he determines (1) that such program is consistent with the purposes of this subpart and (2) that the program's objectives cannot be accomplished within three months because of the unusually complex or

specialized nature of the training to be undertaken.

[37 FR 7093, Apr. 8, 1972, as amended at 40 FR 17991, Apr. 24, 1975]

§ 59.204 Application for a grant.

(a) An application for a grant under this subpart shall be submitted to the Secretary at such time and in such form and manner as the Secretary may prescribe.[1] The application shall contain a full and adequate description of the project and of the manner in which the applicant intends to conduct the project and carry out the requirements of this subpart, and a budget and justification of the amount of grant funds requested, and such other pertinent information as the Secretary may require.

(b) The application shall be executed by an individual authorized to act for the applicant and to assume for the applicant the obligations imposed by the regulations of this subpart and any additional conditions of the grant.

(Sec. 6(c), Public Health Service Act, 84 Stat. 1506 and 1507 (42 U.S.C. 300, 300a–1, and 300a–4))

[37 FR 7093, Apr. 8, 1972, as amended at 49 FR 38116, Sept. 27, 1984]

§ 59.205 Project requirements.

An approvable application must contain each of the following unless the Secretary determines that the applicant has established good cause for its omission:

(a) Assurances that:

(1) No portion of the Federal funds will be used to train personnel for programs where abortion is a method of family planning.

(2) No portion of the Federal funds will be used to provide professional training to any student as part of his education in pursuit of an academic degree.

(3) No project personnel or trainees shall on the grounds of sex, religion, or creed be excluded from participation in, be denied the benefits of, or be subjected to discrimination under the project.

(b) Provision of a methodology to assess the particular training (e.g., skills, attitudes, or knowledge) that prospective trainees in the area to be served need to improve their delivery of family planning services.

(c) Provision of a methodology to define the objectives of the training program in light of the particular needs of trainees defined pursuant to paragraph (b) of this section.

(d) Provision of a method for development of the training curriculum and any attendant training materials and resources.

(e) Provision of a method for implementation of the needed training.

(f) Provision of an evaluation methodology, including the manner in which such methodology will be employed, to measure the achievement of the objectives of the training program.

(g) Provision of a method and criteria by which trainees will be selected.

§ 59.206 Evaluation and grant award.

(a) Within the limits of funds available for such purpose, the Secretary may award grants to assist in the establishment and operation of those projects which will in his judgment best promote the purposes of section 1003 of the Act, taking into account:

(1) The extent to which a training program will increase the delivery of services to people, particularly low-income groups, with a high percentage of unmet need for family planning services;

(2) The extent to which the training program promises to fulfill the family planning services delivery needs of the area to be served, which may include, among other things:

(i) Development of a capability within family planning service projects to provide pre- and in-service training to their own staffs;

(ii) Improvement of the family planning services delivery skills of family planning and health services personnel;

(iii) Improvement in the utilization and career development of paraprofessional and paramedical manpower in family planning services;

[1] Applications and instructions may be obtained from the Program Director, Family Planning Services, at the Regional Office of the Department of Health and Human Services for the region in which the project is to be conducted, or the Office of Family Planning, Office of the Assistant Secretary for Health, Washington, DC 20201.

(iv) Expansion of family planning services, particularly in rural areas, through new or improved approaches to program planning and deployment of resources;

(3) The capacity of the applicant to make rapid and effective use of such assistance;

(4) The administrative and management capability and competence of the applicant;

(5) The competence of the project staff in relation to the services to be provided; and

(6) The degree to which the project plan adequately provides for the requirements set forth in § 59.205.

(b) The amount of any award shall be determined by the Secretary on the basis of his estimate of the sum necessary for all or a designated portion of direct project costs plus an additional amount for indirect costs, if any, which will be calculated by the Secretary either: (1) On the basis of his estimate of the actual indirect costs reasonably related to the project, or (2) on the basis of a percentage of all, or a portion of, the estimated direct costs of the project when there are reasonable assurances that the use of such percentage will not exceed the approximate actual indirect costs. Such award may include an estimated provisional amount for indirect costs or for designated direct costs (such as travel or supply costs) subject to upward (within the limits of available funds) as well as downward adjustments to actual costs when the amount properly expended by the grantee for provisional items has been determined by the Secretary.

(c) Allowability of costs shall be in conformance with the applicable cost principles prescribed by Subpart Q of 35 CFR part 74.

(d) All grant awards shall be in writing, shall set forth the amount of funds granted and the period for which support is recommended.

(e) Neither the approval of any project nor any grant award shall commit or obligate the United States in any way to make any additional, supplemental, continuation, or other award with respect to any approved project or portion thereof. For continuation support, grantees must make separate application annually at such times and in such form as the Secretary may direct.

[37 FR 7093, Apr. 8, 1972, as amended at 38 FR 26199, Sept. 19, 1973]

§ 59.207 Payments.

The Secretary shall from time to time make payments to a grantee of all or a portion of any grant award, either in advance or by way of reimbursement for expenses incurred or to be incurred in the performance of the project to the extent he determines such payments necessary to promote prompt initiation and advancement of the approved project.

§ 59.208 Use of project funds.

(a) Any funds granted pursuant to this subpart as well as other funds to be used in performance of the approved project shall be expended solely for carrying out the approved project in accordance with the statute, the regulations of this subpart, the terms and conditions of the award, and, except as may otherwise be provided in this subpart, the applicable cost principles prescribed by subpart Q of 45 CFR part 74.

(b) Prior approval by the Secretary of revision of the budget and project plan is required whenever there is to be a significant change in the scope or nature of project activities.

(c) The Secretary may approve the payment of grant funds to trainees for:

(1) Return travel to the trainee's point of origin.

(2) Per diem during the training program, and during travel to and from the program, at the prevailing institutional or governmental rate, whichever is lower.

[37 FR 7093, Apr. 8, 1972, as amended at 38 FR 26199, Sept. 19, 1973]

§ 59.209 Civil rights.

Attention is called to the requirements of Title VI of the Civil Rights Act of 1964 (78 Stat. 252, 42 U.S.C. 2000d *et seq.*) and in particular section 601 of such Act which provides that no person in the United States shall, on the grounds of race, color, or national origin be excluded from participation in,

be denied the benefits of, or be subjected to discrimination under any program or activity receiving Federal financial assistance. A regulation impelmenting such title VI, which applies to grants made under this part, has been issued by the Secretary of Health and Human Services with the approval of the President (45 CFR part 80).

§ 59.210 Inventions or discoveries.

Any grant award pursuant to § 59.206 is subject to the regulations of the Department of Health and Human Services as set forth in 45 CFR parts 6 and 8, as amended. Such regulations shall apply to any activity for which grant funds are in fact used whether within the scope of the project as approved or otherwise. Appropriate measures shall be taken by the grantee and by the Secretary to assure that no contracts, assignments or other arrangements inconsistent with the grant obligation are continued or entered into and that all personnel involved in the supported activity are aware of and comply with such obligations. Laboratory notes, related technical data, and information pertaining to inventions and discoveries shall be maintained for such periods, and filed with or otherwise made available to the Secretary, or those he may designate at such times and in such manner, as he may determine necessary to carry out such Department regulations.

§ 59.211 Publications and copyright.

Except as may otherwise be provided under the terms and conditions of the award, the grantee may copyright without prior approval any publications, films or similar materials developed or resulting from a project supported by a grant under this part, subject, however, to a royalty-free, nonexclusive, and irrevocable license or right in the Government to reproduce, translate, publish, use, disseminate, and dispose of such materials and to authorize others to do so.

§ 59.212 Grantee accountability.

(a) *Accounting for grant award payments.* All payments made by the Secretary shall be recorded by the grantee in accounting records separate from the records of all other grant funds, including funds derived from other grant awards. With respect to each approved project the grantee shall account for the sum total of all amounts paid by presenting or otherwise making available evidence satisfactory to the Secretary of expenditures for direct and indirect costs meeting the requirements of this part: *Provided, however,* That when the amount awarded for indirect costs was based on a predetermined fixed-percentage of estimated direct costs, the amount allowed for indirect costs shall be computed on the basis of such predetermined fixed-percentage rates applied to the total, or a selected element thereof, of the reimbursable direct costs incurred.

(b) [Reserved]

(c) *Accounting for grant-related income*—(1) *Interest.* Pursuant to section 203 of the Intergovernmental Cooperation Act of 1968 (42 U.S.C. 4213), a State will not be held accountable for interest earned on grant funds, pending their disbursement for grant purposes. A State, as defined in section 102 of the Intergovernmental Cooperation Act, means any one of the several States, the District of Columbia, Puerto Rico, any territory or possession of the United States, or any agency or instrumentality of a State, but does not include the governments of the political subdivisions of the State. All grantees other than a State, as defined in this subsection, must return all interest earned on grant funds to the Federal Government.

(d) *Grant closeout*—(1) *Date of final accounting.* A grantee shall render, with respect to each approved project, a full account, as provided herein, as of the date of the termination of grant support. The Secretary may require other special and periodic accounting.

(2) *Final settlement.* There shall be payable to the Federal Government as final settlement with respect to each approved project the total sum of:

(i) Any amount not accounted for pursuant to paragraph (a) of this section;

(ii) Any credits for earned interest pursuant to paragraph (c)(1) of this section;

(iii) Any other amounts due pursuant to subparts F, M, and O of 45 CFR part 74.

Such total sum shall constitute a debt owed by the grantee to the Federal Government and shall be recovered from the grantee or its successors or assignees by setoff or other action as provided by law.

[36 FR 18465, Sept. 15, 1971, as amended at 38 FR 26199, Sept. 19, 1973]

§ 59.213 [Reserved]

§ 59.214 Additional conditions.

The Secretary may with respect to any grant award impose additional conditions prior to or at the time of any award when in his judgment such conditions are necessary to assure or protect advancement of the approved project, the interests of public health, or the conservation of grant funds.

§ 59.215 Applicability of 45 CFR part 74.

The provisions of 45 CFR part 74, establishing uniform administrative requirements and cost principles, shall apply to all grants under this subpart to State and local governments as those terms are defined in subpart A of that part 74. The relevant provisions of the following subparts of part 74 shall also apply to grants to all other grantee organizations under this subpart.

45 CFR PART 74

Subpart:
A General.
B Cash Depositories.
C Bonding and Insurance.
D Retention and Custodial Requirements for Records.
F Grant-Related Income.
G Matching and Cost Sharing.
K Grant Payment Requirements.
L Budget Revision Procedures.
M Grant Closeout, Suspension, and Termination.
O Property.
Q Cost Principles.

[38 FR 26199, Sept. 19, 1973]

PART 59a—NATIONAL LIBRARY OF MEDICINE GRANTS

Subpart A—Grants for Establishing, Expanding, and Improving Basic Resources

Sec.
59a.1 Programs to which these regulations apply.
59a.2 Definitions.
59a.3 Who is eligible for a grant?
59a.4 How are grant applications evaluated?
59a.5 Awards.
59a.6 How may funds or materials be used?
59a.7 Other HHS regulations that apply.

Subpart B—Establishment of Regional Medical Libraries

59a.11 Programs to which these regulations apply.
59a.12 Definitions.
59a.13 Who is eligible for a grant?
59a.14 How to apply.
59a.15 Awards.
59a.16 What other conditions apply?
59a.17 Other HHS regulations that apply.

SOURCE: 56 FR 29189, June 26, 1991, unless otherwise noted.

Subpart A—Grants for Establishing, Expanding, and Improving Basic Resources

AUTHORITY: 42 U.S.C. 286b–2, 286b–5.

§ 59a.1 Programs to which these regulations apply.

(a) The regulations of this subpart apply to grants of funds, materials, or both, for establishing, expanding, and improving basic medical library resources as authorized by section 474 of the Act (42 U.S.C. 286b–5).

(b) This subpart also applies to cooperative agreements awarded for this purpose. In these circumstances, references to ''grant(s)'' shall include ''cooperative agreements(s).''

§ 59a.2 Definitions.

Undefined terms have the same meaning as provided in the Act. As used in this subpart:

Act means the Public Health Service Act, as amended (42 U.S.C. 201 *et seq.*).

Project period—See § 59a.5(c).

Related instrumentality means a public or private institution, organization, or agency, other than a medical library, whose primary function is the acquisition, preservation, dissemination, and/or processing of information relating to the health sciences.

Secretary means the Secretary of Health and Human Services and any other official of the Department of Health and Human Services to whom the authority involved is delegated.

§59a.3 Who is eligible for a grant?

Except as otherwise prohibited by law, any public or private nonprofit institution, organization, or agency authorized or qualified to carry on the functions of a medical library, and any public or private related instrumentality, is eligible for a grant under this subpart.

§59a.4 How are grant applications evaluated?

The Secretary shall evaluate grant applications using the officers and employees, and experts, consultants, or groups engaged by the Secretary for that purpose. The Secretary's evaluation shall consider the scope of library or related services for the population and purposes served by the applicant. This evaluation shall include consideration of the following information which must be set forth in the grant application and such other information the Secretary considers pertinent:

(a) Evidence of the applicant's efficiency in providing services,

(b) Amount of available equipment and other resources on hand to satisfy the needs of the area served by the facility,

(c) Extent of coordination with other libraries and related facilities, and

(d) Potential for testing or demonstration of new or improved techniques in health-sciences informational services.

(Approved by the Office of Management and Budget under control number 0925–0276)

§59a.5 Awards.

(a) *General.* Within the limits of funds available, the Secretary may award grants to those applicants whose proposals for establishments, expansion, or improvement will, in the Secretary's judgment, best promote the purposes of section 474 of the Act (42 U.S.C. 286b–5).

(b) *Determination of award amount.* An Award may not exceed $1,000,000 or other amount established by law for any fiscal year.

(1) The scope of medical-library or related services provided by the applicant for the population and purposes it serves considering:

(i) The number of graduate and undergraduate students, and physicians and other practitioners in health-related sciences making use of the applicant's library resources;

(ii) The type and availability of library support staff;

(iii) The type, size, and qualifications of the faculty of any school with which the applicant is affiliated;

(iv) The staff of any hospitals or clinics with which the applicant's library is affiliated;

(v) The geographic area served and, within that area, the medical-library or related services otherwise available; and

(2) The amount adequate to insure continuing financial support from non-Federal sources of the applicant's proposed activity during and after the period of award. The Secretary shall consider the level of non-Federal support for the proposed activity for periods prior to the fiscal year in which a grant is made. The Secretary shall require the applicant's assurance that non-Federal support will not be diminished as a result of the award and that adequate support for this activity will be continued during and after the period of Federal assistance.

(c) *Project period.* (1) the notice of grant award specifies how long the Secretary intends to support the project without requiring the project to recompete for funds. This period, called the project period, will usually be for one to five years.

(2) Generally, the grant will initially be for one year at a time and subsequent continuation awards will also be for one year at a time. A grantee must submit a separate application to have the support continued for each subsequent year. Decisions regarding continuation awards and the funding level

of these awards will be made after consideration of such factors as the grantee's progress and management practices, and the availability of funds. In all cases, continuation awards require a determination by the Secretary that continued funding is in the best interest of the Federal Government.

(3) Neither the approval of any application nor the award of any grant commits or obligates the Federal Government in any way to make any additional, supplemental, continuation, or other award for any approved application or portion of an approved application.

[56 FR 29189, June 26, 1991, as amended at 59 FR 59168, Nov. 16, 1994]

§ 59a.6 How may funds or materials be used?

The grantee shall expend funds or use materials provided by a grant under this subpart solely for the purposes for which the funds or materials were granted, in accordance with the pertinent provisions of the approved application and budget, the regulations of this subpart, the terms and conditions of the award, and the applicable cost principles in subpart Q of 45 CFR part 74.

§ 59a.7 Other HHS regulations that apply.

Several other regulations apply to grants under this subpart. These include, but are not necessarily limited to:

42 CFR part 50, subpart D—Public Health Service grant appeals procedure
45 CFR parts 6 and 8—Inventions and patents
45 CFR part 16—Procedures of the Departmental Grant Appeals Board
45 CFR part 74—Administration of grants
45 CFR part 75—Informal grant appeals procedures
45 CFR part 76 subparts A–F—Government-wide debarment and suspension (nonprocurement) and requirements for drug-free workplace (grants)
45 CFR part 80—Nondiscrimination under programs receiving Federal assistance through the Department of Health and Human Services—effectuation of title VI of the Civil Rights Act of 1964
45 CFR part 81—Practice and procedure for hearings under part 80 of this title
45 CFR part 84—Nondiscrimination on the basis of handicap in programs and activities receiving or benefiting from Federal financial assistance
45 CFR part 86—Nondiscrimination on the basis of sex in education programs and activities receiving or benefiting from Federal financial assistance
45 CFR part 91—Nondiscrimination on the basis of age in HHS programs or activities receiving Federal financial assistance
45 CFR part 92—Uniform administrative requirements for grants and cooperative agreements to state and local governments

Subpart B—Establishment of Regional Medical Libraries

AUTHORITY: 42 U.S.C. 286b–2, 286b–6.

§ 59a.11 Programs to which these regulations apply.

(a) This subpart applies to grants made under section 475 of the Act (42 U.S.C. 286b–6). Grants are awarded to medical libraries to enable them to serve as regional medical libraries for their geographic areas. The purpose of the program is to develop a national system of regional medical libraries, each of which would have sufficient facilities to supplement the services of other medical libraries in its region.

(b) The purpose of the program may also be supported by contracts. Since the primary purpose of these contracts is to assist regional libraries and is not for the purpose of acquiring supplies or services for use of the Federal Government, the provisions of the Federal Acquisition Regulation (48 CFR chapter 1) do not apply. Any contract awarded pursuant to section 475 of the Act shall be subject to the applicable provisions of this subpart.

§ 59a.12 Definitions.

Underfined terms have the same meaning as provided in the Act.

As used in this subpart:

Act means the Public Health Service Act, as amended (42 U.S.C. 201 *et seq.*).

Annual operating expenses means the average annual operating expenses for the actual years of operation or an estimated amount based on the expenses of libraries or institutions of similar size and function.

Board means the Board of Regents of the National Library of Medicine established by section 466 of the Act (42 U.S.C. 286a).

Geographic area means an area that forms an academically and professionally integrated region. Factors considered are location and extent of communication facilities and systems, presence and distribution of educational and medical and health facilities and programs and other activities which, in the Secretary's opinion, justify the establishment and operation of a regional medical library.

Modify and increase means the use of Federal funds or materials to supplement rather than supplant non-Federal funds available for library resources and services.

Project period—See § 59a.15(b).

Secretary means the Secretary of Health and Human Services and any other official of the Department of Health and Human Services to whom the authority involved is delegated.

§ 59a.13 Who is eligible for a grant?

Except as otherwise prohibited by law, any public or private nonprofit organization which is authorized and qualified to operate a medical library is eligible for a grant under this subpart.

§ 59a.14 How to apply.

In addition to any other pertinent information which the Secretary may require, the applicant shall submit a grant application containing a detailed description of a program to provide health-sciences informational services for the geographic area in which it is located. The description shall include:

(a) The need for services;

(b) The adequacy of the applicant's existing or proposed facilities and resources to attain the purposes stated in the application;

(c) The size and nature of the population to be served;

(d) The region to be served;

(e) Cooperative arrangements in effect, or proposed, with other qualified organizations; and

(f) The justification for the funds requested.

(Approved by the Office of Management and Budget under control number 0925–0276)

§ 59a.15 Awards.

(a) *General.* The Secretary, with the advice of the Board in each case, shall award grants to those applicants whose arrangements and proposed services will, in the Secretary's judgment, have the greatest potential for fulfilling the need for a regional medical library. The Secretary, in determining the priority assigned an applicant, must consider:

(1) The adequacy of the applicant's library in terms of collections, personnel, equipment, and other facilities; and

(2) The size and nature of the population to be served in the applicant's region.

(b) *Project period.* (1) The notice of grant award specifies how long the Secretary intends to support the project without requiring the project to recompete for funds. This period, called the project period, will usually be for one to five years.

(2) Generally, the grant will initially be for one year and subsequent continuation awards will also be for one year at a time. A grantee must submit a separate application to have the support continued for each subsequent year. Decisions regarding continuation awards and the funding level of these awards will be made after consideration of such factors as the grantee's progress and management practices, and the availability of funds. In all cases, continuation awards require a determination by the Secretary that continued funding is in the best interest of the Federal Government.

(3) Neither the approval of any application nor the award of any grant commits or obligates the Federal Government in any way to make any additional, supplemental, continuation, or other award for any approved application or portion of an approved application.

§ 59a.16 What other conditions apply?

Although the Secretary may approve exceptions which are consistent with program purposes, in addition to other terms, conditions, and assurances required by law, each grantee must meet the following requirements:

(a) *Use of funds.* Any funds granted under this subpart shall be expended

solely for the purpose for which the funds were granted in accordance with the approved application and budget, the regulations of this subpart, the terms and conditions of the award, and the applicable cost principles in subpart Q of 45 CFR part 74.

(b) *Library resources*—(1) *Provision of services.* The grantee shall modify and increase its library resources to provide supportive services to other health-sciences informational activities.

(2) *Access to and fees for services.* The grantee shall provide free loan services to qualified users or, in lieu of loans, make available photoduplicated or facsimile copies of biomedical materials which qualified requesters may retain. Reasonable fees may be charged for copies or other services (other than free loan services) provided by a grantee under this subpart: *Provided,* That equal access to the health-information resources of the region or of the national network is assured. These fees shall be designed to recover expenses. The grantee's access policies shall determine the qualifications of individuals or organizations for access to the services provided under the grant, so long as those policies are consistent with the mandatory service undertakings of the program. The Secretary may review the grantee's access policies to assure compliance with this requirement.

(Approved by the Office of Management and Budget under control number 0925–0276)

§ 59a.17 Other HHS regulations that apply.

Several other regulations apply to grants under this subpart. These include, but are not necessarily limited to:

42 CFR part 50, subpart A—Responsibilities of PHS awardee and applicant institutions for dealing with and reporting possible misconduct in science
42 CFR part 50, subpart D—Public Health Service grant appeals procedure
45 CFR parts 6 and 8—Inventions and patents
45 CFR part 16—Procedures of the Departmental Grant Appeals Board
45 CFR part 74—Administration of grants
45 CFR part 75—Informal grant appeals procedures
45 CFR part 76, subparts A–F—Government-wide debarment and suspension (nonprocurement) and requirements for drug-free workplace (grants)
45 CFR part 80—Nondiscrimination under programs receiving Federal assistance through the Department of Health and Human Services—effectuation of title VI of the Civil Rights Act of 1964
45 CFR part 81—Practice and procedure for hearings under part 80 of this title
45 CFR part 84—Nondiscrimination on the basis of handicap in programs and activities receiving or benefiting from Federal financial assistance
45 CFR part 86—Nondiscrimination on the basis of sex in education programs and activities receiving or benefiting from Federal financial assistance
45 CFR part 91—Nondiscrimination on the basis of age in HHS programs or activities receiving Federal financial assistance
45 CFR part 92—Uniform administrative requirements for grants and cooperative agreements to state and local governments

PART 60—HEALTH EDUCATION ASSISTANCE LOAN PROGRAM

Subpart A—General Program Description

Sec.
60.1 What is the HEAL program?

Subpart B—The Borrower

60.5 Who is an eligible student borrower?
60.6 Who is an eligible nonstudent borrower?
60.7 The loan application process.
60.8 What are the borrower's major rights and responsibilities?

Subpart C—The Loan

60.10 How much can be borrowed?
60.11 Terms of repayment.
60.12 Deferment.
60.13 Interest.
60.14 The insurance premium.
60.15 Other charges to the borrower.
60.16 Power of attorney.
60.17 Security and endorsement.
60.18 Consolidation of HEAL loans.
60.19 Forms.
60.20 The Secretary's collection efforts after payment of a default claim.
60.21 Refunds.

Subpart D—The Lender and Holder

60.30 Which organizations are eligible to apply to be HEAL lenders and holders?
60.31 The application to be a HEAL lender or holder.
60.32 The HEAL lender or holder insurance contract.

60.33 Making a HEAL loan.
60.34 HEAL loan account servicing.
60.35 HEAL loan collection.
60.36 Consequence of using an agent.
60.37 Forbearance.
60.38 Assignment of a HEAL loan.
60.39 Death and disability claims.
60.40 Procedures for filing claims.
60.41 Determination of amount of loss on claims.
60.42 Records, reports, inspection, and audit requirements for HEAL lenders and holders.
60.43 Limitation, suspension, or termination of the eligibility of a HEAL lender or holder.

Subpart E—The School

60.50 Which schools are eligible to be HEAL schools?
60.51 The student loan application.
60.52 The student's loan check.
60.53 Notification to lender or holder of change in enrollment status.
60.54 Payment of refunds by schools.
60.55 Administrative and fiscal procedures.
60.56 Records.
60.57 Reports.
60.58 Federal access to school records.
60.59 Records and federal access after a school is no longer a HEAL school.
60.60 Limitation, suspension, or termination of the eligibility of a HEAL school.
60.61 Responsibilities of a HEAL school.

AUTHORITY: Sec. 215, of the Public Health Service Act, 58 Stat. 690, as amended, 63 Stat. 35 (42 U.S.C. 216); secs. 727–739A of the Public Health Service Act, 90 Stat. 2243, as amended, 93 Stat. 582, 99 Stat. 529–532, 102 Stat. 3122–3125 (42 U.S.C. 294–294*l*–1); renumbered as secs. 701–720, as amended by 106 Stat. 1994–2011 (42 U.S.C. 292–292p).

SOURCE: 48 FR 38988, Aug. 26, 1983, unless otherwise noted.

Subpart A—General Program Description

§60.1 What is the HEAL program?

(a) The Health Education Assistance Loan (HEAL) program is a program of Federal insurance of educational loans to graduate students in the fields of medicine, osteopathic medicine, dentistry, veterinary medicine, optometry, podiatric medicine, pharmacy, public health, chiropractic, health administration and clinical psychology. The basic purpose of the program is to encourage lenders to make loans to students in these fields who desire to borrow money to pay for their educational costs. In addition, certain nonstudents (such as doctors serving as interns or residents) can borrow in order to pay the current interest charges accruing on earlier HEAL loans. By taking a HEAL loan, the borrower is obligated to repay the lender or holder the full amount of the money borrowed, plus all interest which accrues on the loan.

(b) HEAL loans may be made by schools, banks, credit unions, State agencies, and other institutions eligible as lenders under §60.30. HEAL school eligibility is described in §60.50.

(c) The Secretary insures each lender or holder for the losses of principal and interest it may incur in the event that a borrower dies; becomes totally and permanently disabled; files for bankruptcy under chapter 11 or 13 of the Bankruptcy Act; files for bankruptcy under chapter 7 of the Bankruptcy Act and files a compliant to determine the dischargeability of the HEAL loan; or defaults on his or her loan. In these instances, if the lender or holder has complied with all HEAL statutes and regulations, and with the lender's or holder's insurance contract, and the Secretary pays the amount of the loss to the lender or holder, the borrower's loan is then assigned to the Secretary. Only at that time, the United States Government becomes the borrower's direct creditor and will actively pursue the borrower for repayment of the debt, including reporting the borrower's default on the loan to consumer credit reporting agencies or to the Internal Revenue Service for purposes of locating such taxpayer or for income tax refund offset, and referral to the Department of Justice for litigation.

(d) Any person who knowingly makes a false statement or misrepresentation in a HEAL loan transaction, bribes or attempts to bribe a Federal official, fraudulently obtains a HEAL loan, or commits any other illegal action in connection with a HEAL loan is subject to possible fine and imprisonment under Federal statute.

(e) *Calculating time periods.* In counting the number of days allowed to comply with any provisions of these regulations, Saturdays, Sundays, and holidays are to be included. However, if a

due date falls on a Saturday, Sunday, or Federal holiday, the due date is the next Federal work day.

[48 FR 38988, Aug. 26, 1983, as amended at 52 FR 745, Jan. 8, 1987; 56 FR 42700, Aug. 29, 1991; 57 FR 28793, June 29, 1992]

Subpart B—The Borrower

§ 60.5 Who is an eligible student borrower?

To receive a HEAL loan, a student must satisfy the following requirements:

(a) He or she must be a citizen, national, or lawful permanent resident of the United States, permanent resident of the Trust Territory of the Pacific Islands (the Republic of Palau), the Republic of the Marshall Islands, the Federated States of Micronesia, the Commonwealth of the Northern Mariana Islands, or American Samoa, or lawful permanent resident of the Commonwealth of Puerto Rico, the Virgin Islands or Guam;

(b) He or she must be enrolled or accepted for enrollment at a HEAL school in a course of study that leads to one of the following degrees:

Doctor of Medicine
Doctor of Osteopathic Medicine
Doctor of Dentistry or equivalent degree
Doctor of Veterinary Medicine or equivalent degree
Doctor of Optometry or equivalent degree
Doctor of Podiatric Medicine or equivalent degree
Bachelor or Master of Science in Pharmacy or equivalent degree
Graduate or equivalent degree in Public Health
Doctor of Chiropractic or equivalent degree
Doctoral degree in Clinical Psychology
Masters or doctoral degree in Health Administration

(c) He or she must be carrying or plan to carry, during the period for which the loan is intended, the normal work load of a full-time student, as determined by the school. The student's work load may include any combination of courses, work experience, research or special studies that the school considers sufficient to classify the student as full time.

(d) If currently enrolled in school, he or she must be in good standing, as determined by the school.

(e)(1) In the case of a pharmacy student, he or she must have satisfactorily completed 3 years of training toward the pharmacy degree. These 3 years of training may have been taken at the pharmacy school or at a different school whose credits are accepted on transfer by the pharmacy school.

(2) The Doctor of Pharmacy degree is considered to be an equivalent degree if it is taken in a school that does not require the Bachelor or Master of Science in pharmacy as a prerequisite for the Doctor of Pharmacy degree.

(f) In the case of a medical, dental or osteopathic student enrolled in a 6-year program that the student may enter directly from secondary school, the student must be enrolled in the last 4 years of the program.

(g) He or she must agree that all funds received under the proposed loan will be used solely for tuition, other reasonable educational expenses, including fees, books, supplies and equipment, and laboratory expenses, reasonable living expenses, reasonable transportation costs (only to the extent that they are directly related to the borrower's education), and the HEAL insurance premium.

(h) He or she must require the loan to pursue the course of study at the school. This determination of the maximum amount of the loan will be made by the school, applying the considerations in § 60.51(f).

(i) If required under section 3 of the Military Selective Service Act to present himself for and submit to registration under such section, he must have presented himself and submitted to registration under such section.

[48 FR 38988, Aug. 26, 1983, as amended at 51 FR 30644, Aug. 28, 1986; 52 FR 745, Jan. 8, 1987; 57 FR 28793, June 29, 1992]

§ 60.6 Who is an eligible nonstudent borrower?

To receive a HEAL loan, a person who is not a student must satisfy all of the following requirements:

(a) He or she must have received a HEAL loan prior to August 13, 1981, for which he or she is required to make payments of interest, but not principal, during the period for which the new loan is intended. This may be the grace

period or a period of internship, residency or deferment.

(b) He or she must continue to meet the citizenship, nationality, or residency qualifications required of student borrowers.

(c) He or she must agree that all funds received under the proposed loan will be used solely for payment of currently accruing interest on HEAL loans and the HEAL insurance premium.

(d) If required under section 3 of the Military Selective Service Act to present himself for and submit to registration under such section, he must have presented himself and submitted to registration under such section.

[48 FR 38988, Aug. 26, 1983, as amended at 51 FR 30644, Aug. 28, 1986]

§60.7 The loan application process.

(a)(1)(i) A student seeking a HEAL loan applies to a participating lender for a HEAL loan by submitting an application form supplied by the school.

(ii) The applicant must fill out the applicant sections of the form completely and accurately.

(2) The student applicant must be informed of the Federal debt collection policies and procedures in accordance with the Department's Claims Collection Regulation (45 CFR part 30) prior to the student receiving the loan. The applicant must sign a certification statement attesting that the applicant has been notified of the actions the Federal Government can take in the event that the applicant fails to meet the scheduled payments. This signed statement must be maintained by the school and the lender or holder as part of the borrower's official record.

(3) A student applicant must have his or her school complete a portion of the application providing information relating to:

(i) The applicant's eligibility for the loan.

(ii) The cost of his or her education; and

(iii) The total financial resources that are actually available to the applicant for his or her costs of education for the period covered by the proposed HEAL loan, as determined in accordance with §60.51(f), and other student aid that the applicant has received or will receive for the period covered by the proposed HEAL loan.

(4) The student applicant must certify on the application that the information provided reflects the applicant's total financial resources actually available for his or her costs of education for the period covered by the proposed HEAL loan and the applicant's total indebtedness, and that the applicant has no other financial resources that are available to the applicant or that the applicant will receive for the period covered by the proposed HEAL loan.

(5) A student applicant must certify on the application that if required under section 3 of the Military Selective Service Act to present himself for and submit to registration under such section, he has presented himself and submitted to registration under such section.

(b) The applicant pursuing a full-time course of study at an institution of higher education that is a ''participating school'' in the Guaranteed Student Loan Program but is not pursuing a course of study listed in §60.5(b), applies for a HEAL loan as a nonstudent under paragraph (c) of this section.

(c)(1)(i) A nonstudent seeking a HEAL loan applies to a participating lender for a HEAL loan by submitting an application form supplied by the lender.

(ii) The applicant must fill out the applicant sections of the form completely and accurately.

(2) The nonstudent applicant must be informed of the Federal debt collection policies and procedures in accordance with the Department's Claims Collection Regulation (45 CFR part 30) prior to the nonstudent receiving the loan. The applicant must sign a certification statement attesting that the applicant has been notified of the actions the Federal Government can take in the event that the applicant fails to meet the scheduled payments. This signed statement will be maintained by the lender or holder as part of the borrower's official record.

(3) A nonstudent applicant must have his or her employer or institution, whichever is relevant, certify on the application that the applicant is:

(i) Enrolled as a full-time student in an eligible school, as described in § 60.12;

(ii) A participant in an accredited internship or residency program, as described in § 60.11(a);

(iii) A member of the Armed Forces of the United States;

(iv) A Peace Corps volunteer;

(v) A member of the National Health Service Corps; or

(vi) A full-time VISTA volunteer under Title I of the Domestic Volunteer Service Act of 1973.

(4) The nonstudent applicant seeking a HEAL loan during the grace period applies to the lender directly.

(5) A nonstudent applicant must certify on the application that if required under section 3 of the Military Selective Service Act to present himself for and submit to registration under such section, he has presented himself and submitted to registration under such section.

(6) The nonstudent applicant must certify on the application that the information provided reflects the applicant's total financial resources and indebtedness.

(Approved by the Office of Management and Budget under control numbers 0915–0038 and 0915–0108)

[48 FR 38988, Aug. 26, 1983, as amended at 51 FR 30644, Aug. 28, 1986; 52 FR 746, Jan. 8, 1987; 57 FR 28794, June 29, 1992]

§ 60.8 What are the borrower's major rights and responsibilities?

(a) *The borrower's rights.* (1) Once the terms of the HEAL loan have been established, the lender or holder may not change them without the borrower's consent.

(2) The lender must provide the borrower with a copy of the completed promissory note when the loan is made. The lender or holder must return the original note to the borrower when the loan is paid in full.

(3) A lender must disburse HEAL loan proceeds as described in § 60.33(f).

(4) The lender or holder must provide the borrower with a copy of the repayment schedule before repayment begins.

(5) If the loan is sold from one lender or holder to another lender or holder, or if the loan is serviced by a party other than the lender or holder, the buyer must notify the borrower within 30 days of the transaction.

(6) The borrower does not have to begin repayment until 9 full months after leaving school or an accredited internship or residency program as described in § 60.11.

(7) The borrower is entitled to deferment from repayment of the principal and interest installments during periods described in § 60.12.

(8) The borrower may prepay the whole or any portion of the loan at any time without penalty.

(9) The lender or holder must allow the borrower to repay a HEAL loan according to a graduated repayment schedule.

(10) The borrower's total loan obligation is cancelled in the event of death or total and permanent disability.

(11) To assist the borrower in avoiding default, the lender or holder may grant the borrower forbearance. Forbearance, including circumstances in which the lender or holder must grant forbearance, is more fully described in § 60.37.

(12) Any borrower who received a fixed interest rate HEAL loan in excess of 12 percent per year may enter into an agreement with the lender which made this loan for the reissuance of the loan in accordance with section 739A of the Public Health Service Act.

(b) *The borrower's responsibilities.* (1) The borrower must pay any insurance premium that the lender may require as more fully described in § 60.14.

(2) The borrower must pay all interest charges on the loan as required by the lender or holder.

(3) The borrower must immediately notify the lender or holder in writing in the event of:

(i) Change of address;

(ii) Change of name;

(iii) Failure to enroll in a HEAL school for the period for which the loan is intended;

(iv) Transfer to another school;

(v) Withdrawal from a HEAL school or change in status to less than full-time attendance at a HEAL school;

(vi) Graduation;

(vii) Failure to enter into or interruption in an internship or residency program; or

(viii) Change of status that authorizes deferment.

(4) The borrower must repay the loan in accordance with the repayment schedule.

(5) A borrower may not have a HEAL loan discharged in bankruptcy during the first 5 years of the repayment period. This prohibition against the discharge of a HEAL loan applies to bankruptcy under *any* chapter of the Bankruptcy Act, including Chapter 13. A borrower may have a HEAL loan discharged in bankruptcy after the first 5 years of the repayment period only upon a finding by the Bankruptcy Court that the non-discharge of such debt would be unconscionable and upon the condition that the Secretary shall not have waived his or her rights to reduce any Federal reimbursements or Federal payments for health services under any Federal law in amounts up to the balance of the loan.

(6) If the borrower fails to make payments on the loan on time, the total amount to be repaid by the borrower may be increased by additional interest, late charges, attorney's fees, court costs, and other collection charges. In addition, the Secretary may offset amounts attributable to an unpaid loan from reimbursements or payment for health services provided under any Federal law to a defaulted borrower practicing his or her profession.

(Approved by the Office of Management and Budget under control number 0915–0108)

[48 FR 38988, Aug. 26, 1983, as amended at 52 FR 746, Jan. 8, 1987; 57 FR 28794, June 29, 1992]

Subpart C—The Loan

§60.10 How much can be borrowed?

(a) *Student borrower.* An eligible student may borrow an amount to be used solely for expenses, as described in §60.5(g), incurred or to be incurred over a period of up to an academic year and disbursed in accordance with §60.33(f). The maximum amount he or she may receive for that period shall be determined by the school in accordance with §60.51(f) within the following limitations:

(1) A student enrolled in a school of medicine, osteopathic medicine, dentistry, veterinary medicine, optometry or podiatric medicine may borrow up to $80,000 under this part. The amount received may not exceed $20,000 in any academic year.

(2) A student enrolled in a school of public health, pharmacy, chiropractic, or a graduate program in health administration, clinical psychology, or allied health may borrow up to $50,000 under this part. The amount received may not exceed $12,500 per academic year.

(3) For purposes of this paragraph, an academic year means the traditional approximately 9-month September-to-June annual session. For the purpose of computing academic year equivalents for students who, during a 12-month period, attend for a longer period than the traditional academic year, the academic year will be considered to be 9 months in length.

(4) The student's estimated cost of attendance shall not exceed the estimated cost of attendance of all students in like circumstances pursuing a similar curriculum at that school.

(b) *Non-student borrower.* An eligible nonstudent may borrow amounts under this authority with the following restrictions:

(1) In no case may an eligible nonstudent borrower receive a loan that is greater than the sum of the HEAL insurance premium plus the interest that is expected to accrue and must be paid on the borrower's HEAL loans during the period for which the new loan is intended.

(2) An eligible nonstudent in the field of medicine, ostepathic medicine, dentistry, veterinary medicine, optometry, or podiatric medicine may borrow up to $80,000 under this part including loans obtained while the borrower was a student. The loan amount may not exceed $20,000 in any 12-month period.

(3) An eligible nonstudent in the field of pharmacy, public health, chiropractic, health administration, or clinical psychology may borrow up to $50,000 under this part including loans obtained while the borrower was a student. The loan amount received under this part may not exceed $12,500 in any 12-month period.

[48 FR 38988, Aug. 26, 1983, as amended at 51 FR 30644, Aug. 28, 1986; 52 FR 746, Jan. 8, 1987; 57 FR 28794, June 29, 1992]

§ 60.11 Terms of repayment.

(a) *Commencement of repayment.* (1) The borrower's repayment period must begin the first day of the 10th month after the month he or she ceases to be a full-time student at a HEAL school. The 9-month period before the repayment period begins is popularly called the ''grace period.''

(i) *Postponement for internship or residency program.* However, if the borrower becomes an intern or resident in an accredited program within 9 full months after leaving school, then the borrower's repayment period must begin the first day of the 10th month after the month he or she ceases to be an intern or resident. For a borrower who receives his or her first HEAL loan on or after October 22, 1985, this postponement of the beginning of the repayment period for participation in an internship or residency program is limited to 4 years.

(ii) *Postponement for fellowship training or educational activity.* For any HEAL loan received on or after October 22, 1985, if the borrower becomes an intern or resident in an accredited program within 9 full months after leaving school, and subsequently enters into a fellowship training program or an educational activity, as described in § 60.12(b)(1) and (2), within 9 months after the completion of the accredited internship or residency program or prior to the completion of such program, the borrower's repayment period begins on the first day of the 10th month after the month he or she ceases to be a participant in the fellowship training program or educational activity. Postponement of the commencement of the repayment period for either activity is limited to 2 years.

(iii) *Non-student borrower.* If a nonstudent borrower obtains another HEAL loan during the grace period or period of internship, residency, or deferment (as defined in § 60.12), the borrower must begin to repay this loan when repayment on the borrower's other HEAL loans begins or resumes.

(2) An accredited internship or residency program must be approved by one of the following accrediting agencies:

(i) Accreditation Council for Graduate Medical Education.

(ii) Council on Optometric Education.

(iii) Commission on Accreditation of Dental and Dental Auxiliary Programs.

(iv) American Osteopathic Association.

(v) Council on Podiatry Education.

(vi) American Council on Pharmaceutical Education.

(vii) Council on Education for Public Health.

(viii) American College of Veterinary Surgeons.

(ix) Council on Chiropractic Education.

(b) *Length of repayment period.* In general, a lender or holder must allow a borrower at least 10 years, but not more than 25 years, to repay a loan calculated from the beginning of the repayment period. A borrower must fully repay a loan within 33 years from the date that the loan is made.

(1) For a HEAL borrower who received any HEAL loan prior to October 22, 1985, periods of deferment (as described in § 60.12) are not included when calculating the 10 to 25 or 33 year limitations.

(2) For a borrower who receives his or her first HEAL loan on or after October 22, 1985, periods of deferment (as described in § 60.12) are included when calculating the 33 year limitation, but are not included when calculating the 10 to 25 year limitation.

(c) *Prepayment.* The borrower may prepay the whole or any part of the loan at any time without penalty.

(d) *Minimum annual payment.* During each year of repayment, a borrower's payments to all holders of his or her HEAL loans must total the interest that accrues during the year on all of the loans, unless the borrower, in the promissory note or other written agreement, agrees to make payments during any year or any repayment period in a lesser amount.

(e) *Repayment schedule agreement.* At least 30 and not more than 60 days before the commencement of the repayment period, a borrower must contact the holder of the loan to establish the precise terms of repayment. The borrower may select a monthly repayment

schedule with substantially equal installment payments or a monthly repayment schedule with graduated installment payments that increase in amount over the repayment period. If the borrower does not contact the lender or holder and does not respond to contacts from the lender or holder, the lender or holder may establish a monthly repayment schedule with substantially equal installment payments, subject to the terms of the borrower's HEAL note.

(f) *Supplemental repayment agreement.* (1) A lender or holder and a borrower may enter into an agreement supplementing the regular repayment schedule agreement. Under a supplemental repayment agreement, the lender or holder agrees to consider that the borrower has met the terms of the regular repayment schedule as long as the borrower makes payments in accordance with the supplemental schedule.

(2) The purpose of a supplemental repayment agreement is to permit a lender or holder, at its option, to offer a borrower a repayment schedule based on other than equal or graduated payments. (For example, a supplemental repayment agreement may base the amount of the borrower's payments on his or her income.)

(3) The supplemental schedule must contain terms which, according to the Secretary, do not unduly burden the borrower and do not extend the Secretary's insurance liability beyond the number of years specified in paragraph (b) of this section. The supplemental schedule must be approved by the Secretary prior to the start of repayment.

(4) The lender or holder may establish a supplemental repayment agreement over the borrower's objection only if the borrower's written consent to enter into a supplemental agreement was obtained by the lender at the time the loan was made.

(5) A lender or holder may assign a loan subject to a supplemental repayment agreement only if it specifically notifies the buyer of the terms of the supplemental agreement. In such cases, the loan and the supplemental agreement must be assigned together.

(Approved by the Office of Management and Budget under control numbers 0915–0043 and 0915–0108)

[48 FR 38988, Aug. 26, 1983, as amended at 51 FR 30644, Aug. 28, 1986; 53 FR 6097, Feb. 29, 1988; 57 FR 28794, June 29, 1992]

§60.12 Deferment.

(a) After the repayment period has commenced, installments of principal and interest need not be paid during any period:

(1) During which the borrower is pursuing a full-time course of study at a HEAL school or at an institution of higher education that is a ''participating school'' in the Guaranteed Student Loan Program;

(2) Up to 4 years during which the borrower is a participant in an accredited internship or residency program, as described in §60.11(a)(2). For a borrower who receives his or her first HEAL loan on or after October 22, 1985, this total of 4 years for an internship or residency program includes any period of postponement of the repayment period, as described in §60.11(a)(1);

(3) Up to 3 years during which the borrower is a member of the Armed Forces of the United States;

(4) Up to 3 years during which the borrower is in service as a volunteer under the Peace Corps Act;

(5) Up to 3 years during which the borrower is a member of the National Health Service Corps; or

(6) Up to 3 years during which the borrower is a full-time volunteer under title I of the Domestic Volunteer Service Act of 1973.

(b) For any HEAL loan received on or after October 22, 1985, after the repayment period has commenced, installments of principal and interest need not be paid during any period for up to 2 years during which the borrower is a participant in:

(1) A fellowship training program, which:

(i) Is directly related to the discipline for which the borrower received the HEAL loan;

(ii) Begins within 12 months after the borrower ceases to be a participant in

an accredited internship or residency program, as described in § 60.11(a)(2), or prior to the completion of the borrower's participation in such program;

(iii) Is a full-time activity in reasearch or reserch training or health care policy;

(iv) Is not a part of, an extension of, or associated with an internship or residency program, as described in § 60.11(a)(2);

(v) Pays no stipend or one which is not more than the annual stipend level established by the Public Health Service for the payment of uniform levels of financial support for trainees receiving graduate and professional training under Public Health Service grants, as in effect at the time the borrower requests the deferment; and

(vi) Is a formally established fellowship program which was not created for a specific individual; or

(2) A full-time educational activity at an institution defined by section 435(b) of the Higher Education Act of 1965 which:

(i) Is directly related to the discipline for which the borrower received the HEAL loan;

(ii) Begins within 12 months after the borrower ceases to be a participant in an accredited internship or residency program, as described in § 60.11(a)(2), or prior to the completion of the borrower's participation in such program;

(iii) Is not a part of, an extension of, or associated with an internship or residency program, as described in § 60.11(a)(2); and

(iv) Is required for licensure, registration, or certification in the State in which the borrower intends to practice the discipline for which the borrower received the HEAL program loan.

(c) (1) To receive a deferment, including a deferral of the onset of the repayment period (see § 60.11(a)), a borrower must at least 30 days prior to, but not more than 60 days prior to, the onset of the activity and annually thereafter, submit to the lender or holder evidence of his or her status in the deferment activity and evidence that verifies deferment eligibility of the activity (with the full expectation that the borrower will begin the activity). It is the responsibility of the borrower to provide the lender or holder with all required information or other information regarding the requested deferment. If written evidence that verifies eligibility of the activity and the borrower for the deferment, including a certification from an authorized official (e.g., the director of the fellowship activity, the dean of the school, etc.), is received by the lender or holder within the required time limit, the lender or holder must approve the deferment. The lender or holder may rely in good faith upon statements of the borrower and the authorized official, except where those statements or other information conflict with information available to the lender or holder. When those verification statements or other information conflict with information available to the lender or holder, to indicate that the applicant fails to meet the requirements for deferment, the lender or holder may not approve the deferment until those conflicts are resolved.

(2) For those activities described in paragraphs (b)(1) or (b)(2) of this section, the borrower may request that the Secretary review a decision by the lender or holder denying the deferment by sending to the Secretary copies of the application for deferment and the lender's or holder's denial of the request. However, if information submitted to the lender or holder conflicts with other information available to the lender or holder, to indicate that the borrower fails to meet the requirements for deferment, the borrower may not request a review until such conflicts have been resolved. During the review process, the lender or holder must comply with any requests for information made by the Secretary. If the Secretary determines that the fellowship or educational activity is eligible for deferment and so notifies the lender or holder, the lender or holder must approve the deferment.

(Approved by the Office of Management and Budget under control numbers 0915–0034 and 0915–0108)

[48 FR 38988, Aug. 26, 1983, as amended at 51 FR 30644, Aug. 28, 1986; 53 FR 6097, Feb. 29, 1988; 57 FR 28795, June 29, 1992]

§ 60.13 Interest.

(a) *Rate.* At the lender's option, the interest rate on the HEAL loan may be calculated on a fixed rate or on a variable rate basis. However, whichever method is selected must continue over the life of the loan, except where the loan is consolidated with another HEAL loan.

(1) For all loans made on or after October 22, 1985, for each calendar quarter, the Secretary determines the maximum annual HEAL interest rate by determining the average of the bond equivalent rates reported for the 91-day U.S. Treasury bills auctioned for the preceding calendar quarter, adding 3 percentage points, and rounding that amount to the next higher one-eighth of 1 percent.

(2) Interest that is calculated on a fixed rate basis is determined for the life of the loan during the calendar quarter in which the loan is executed. It may not exceed the rate determined for that quarter by the Secretary under paragraph (a)(1) of this section.

(3) Interest that is calculated on a variable rate basis varies every calendar quarter throughout the life of the loan as the market price of U.S. Treasury bills changes. For any quarter it may not exceed the rate determined by the Secretary under paragraph (a)(1) of this section.

(4) The Secretary announces the rate determined under paragraph (a)(1) of this section on a quarterly basis through a notice published in the FEDERAL REGISTER.

(b) *Compounding of interest.* Interest accrues from the date the loan is disbursed until the loan is paid in full. Unpaid accrued interest shall be compounded not more frequently than semiannually and added to principal. However, a lender or holder may postpone the compounding of interest before the beginning of the repayment period or during periods of deferment or forbearance and add interest to principal at the time repayment of principal begins or resumes.

(c) *Payment.* Repayment of principal and interest is due when the repayment period begins. A lender or holder must permit a borrower to postpone paying interest before the beginning of the repayment period or during a period of deferment or forbearance. In these cases, payment of interest begins or resumes on the date repayment of principal begins or resumes.

(d) *Usury laws.* No provision of any Federal or State law that limits the rate or amount of interest payable on loans shall apply to a HEAL loan.

[48 FR 38988, Aug. 26, 1983, as amended at 51 FR 30644, Aug. 28, 1986; 57 FR 28795, June 29, 1992]

§ 60.14 The insurance premium.

(a) *General.* (1) The Secretary insures each lender or holder for the losses of principal and interest it may incur in the event that a borrower dies; becomes totally and permanently disabled; files for bankruptcy under chapter 11 or 13 of the Bankruptcy Act; files for bankruptcy under chapter 7 of the Bankruptcy Act and files a complaint to determine the dischargeability of the HEAL loan; or defaults on his or her loan. For this insurance, the Secretary charges the lender an insurance premium. The insurance premium is due to the Secretary on the date of disbursement of the HEAL loan.

(2) The lender may charge the borrower an amount equal to the cost of the insurance premium. The cost of the insurance premium may be charged to the borrower by the lender in the form of a one-time special charge with no subsequent adjustments required. The lender may bill the borrower separately for the insurance premium or may deduct an amount attributable to it from the loan proceeds before the loan is disbursed. In either case, the lender must clearly identify to the borrower the amount of the insurance premium and the method of calculation.

(3) If the lender does not pay the insurance premium on or before 30 days after disbursement of the loan, a late fee will be charged on a daily basis at the same rate as the interest rate that the lender charges for the HEAL loan for which the insurance premium is past due. The lender may not pass on this late fee to the borrower.

(4) HEAL insurance coverage ceases to be effective if the insurance premium is not paid within 60 days of the disbursement of the loan.

(5) Except in cases of error, premiums are not refundable by the Secretary,

and need not be refunded by the lender to the borrower, even if the borrower graduates or withdraws from the school, defaults, dies or becomes totally and permanently disabled.

(b) *Rate.* The rate of the insurance premium shall not exceed the statutory maximum. The Secretary announces changes in the rate of the insurance premium through a notice published in the FEDERAL REGISTER.

(c) *Method of calculation*—(1) *Student borrowers.* For loans disbursed prior to July 22, 1986, the lender must calculate the insurance premium on the basis of the number of months beginning with the month following the month in which the loan proceeds are disbursed to the student borrower and ending 9 full months after the month of the student's anticipated date of graduation. For loans disbursed on or after July 22, 1986, the insurance premium shall be calculated as a one-time flat rate on the principal of the loan at the time of disbursement.

(2) *Non-student borrowers.* For loans disbursed prior to July 22, 1986, the lender must calculate the insurance premium for nonstudent borrowers on the basis of the number of months beginning with the month following the month in which the loan proceeds are disbursed to the borrower and ending at the conclusion of the month preceding the month in which repayment of principal is expected to begin or resume on the borrower's previous HEAL loans. For loans disbursed on or after July 22, 1986, the insurance premium shall be calculated as a one-time flat rate on the principal of the loan at the time of disbursement.

(3) *Multiple installments.* In cases where the lender disburses the loan in multiple installments, the insurance premium is calculated for each disbursement.

[48 FR 38988, Aug. 26, 1983, as amended at 51 FR 30644 Aug. 28, 1986; 52 FR 746, Jan. 8, 1987; 56 FR 42700, Aug. 29, 1991; 57 FR 28795, June 29, 1992]

§ 60.15 Other charges to the borrower.

(a) *Late charges.* If the borrower fails to pay all of a required installment payment or fails to provide written evidence that verifies eligibility for the deferment of the payment within 30 days after the payment's due date, the lender or holder will require that the borrower pay a late charge. A late charge must be equal to 5 percent of the unpaid portion of the payment due.

(b) *Collection charges.* The lender or holder may also require that the borrower pay the holder of the note for reasonable costs incurred by the holder or its agent in collecting any installment not paid when due. These costs may include attorney's fees, court costs, telegrams, and long-distance phone calls. The holder may not charge the borrower for the normal costs associated with preparing letters and making personal and local telephone contacts with the borrower. A service agency's fee for normal servicing of a loan may not be passed on to the borrower, either directly or indirectly. No charges, other than those authorized by this section, may be passed on to the borrower, either directly or indirectly, without prior approval of the Secretary.

(c) *Other loan making costs.* A lender may not pass on to the borrower any cost of making a HEAL loan other than the costs of the insurance premium.

[48 FR 38988, Aug. 26, 1983, as amended at 52 FR 747, Jan. 8, 1987; 57 FR 28795, June 29, 1992]

§ 60.16 Power of attorney.

Neither a lender nor a school may obtain a borrower's power of attorney or other authorization to endorse a disbursement check on behalf of a borrower. The borrower must personally endorse the check and may not authorize anyone else to endorse it on his or her behalf.

§ 60.17 Security and endorsement.

(a) A HEAL loan must be made without security.

(b) With one exception, it must also be made without endorsement. If a borrower is a minor and cannot under State law create a legally binding obligation by his or her own signature, a lender may require an endorsement by another person on the borrower's HEAL note. For purposes of this paragraph, an ''endorsement'' means a signature of anyone other than the borrower who is to assume either primary or secondary liability on the note.

§ 60.18 Consolidation of HEAL loans.

HEAL loans may be consolidated as follows provided that the lender or holder must first inform the borrower of the effect of the consolidation on the interest rate and explain to the borrower that he or she is not required to agree to the consolidation:

(a) If a lender or holder holds two or more HEAL loans made to the same borrower, the lender or holder and the borrower may agree to consolidate the loans into a single HEAL loan obligation evidenced by one promissory note.

(b) A HEAL loan may be consolidated with any other loan only if:

(1) The consolidation will not result in terms less favorable to the borrower than if no consolidation had occurred, and

(2) The Federal Government does not, as a result of the consolidation, become liable for any payment of principal or interest for a Guaranteed Student Loan under the provisions of section 439(o) of the Higher Education Act of 1965.

(Approved by the Office of Management and Budget under control number 0915–0108)

[48 FR 38988, Aug. 26, 1983, as amended at 57 FR 28795, June 29, 1992]

§ 60.19 Forms.

All HEAL forms are approved by the Secretary and may not be changed without prior approval by the Secretary. HEAL forms shall not be signed in blank by a borrower, a school, a lender or holder, or an agent of any of these. The Secretary may prescribe who must complete the forms, and when and to whom the forms must be sent. All HEAL forms must contain a statement that any person who knowingly makes a false statement or misrepresentation in a HEAL loan transaction, bribes or attempts to bribe a Federal official, fraudulently obtains a HEAL loan, or commits any other illegal action in connection with a HEAL loan is subject to possible fine and imprisonment under Federal statute.

[52 FR 747, Jan. 8, 1987, as amended at 57 FR 28795, June 29, 1992]

§ 60.20 The Secretary's collection efforts after payment of a default claim.

After paying a default claim on a HEAL loan, the Secretary attempts to collect from the borrower and any valid endorser in accordance with the Federal Claims Collection Standards (4 CFR parts 101 through 105), the Office of Management and Budget Circular A–129, issued May 9, 1985, and the Department's Claims Collection Regulation (45 CFR part 30). The Secretary attempts collection of all unpaid principal, interest, penalties, administrative costs, and other charges or fees, except in the following situations:

(a) *The borrower has a valid defense on the loan.* The Secretary refrains from collection against the borrower or endorser to the extent of any defense that the Secretary concludes is valid. Examples of a valid defense include expiration of the statute of limitations and infancy.

(b) *A school owes the borrower a refund for the period covered by the loan.* In this situation, the Secretary refrains from collection to the extent of the unpaid refund if the borrower assigns to the Secretary the right to receive the refund.

(c) *The school or lender or holder is the subject of a lawsuit or Federal administrative proceeding.* In this situation, if the Secretary determines that the proceeding involves allegations that, if proven, would provide the borrower with a full or partial defense on the loan, then the Secretary may suspend collection activity on all or part of a loan until the proceeding ends. The Secretary suspends collection activity only for so long as the proceeding is being energetically prosecuted in good faith and the allegations that relate to the borrower's defense are reasonably likely to be proven.

(d) *The borrower dies or becomes totally and permanently disabled.* In this situation, the Secretary terminates all collection activity against the borrower. If the borrower dies or becomes totally and permanently disabled, the Secretary also terminates all collection activity against any endorser.

[48 FR 38988, Aug. 26, 1983, as amended at 52 FR 747, Jan. 8, 1987; 57 FR 28795, June 29, 1992]

§ 60.21 Refunds.

(a) *Student authorization.* By applying for a HEAL loan, a student authorizes a participating school to make payment of a refund that is allocable to a HEAL loan directly to the original lender (or to a subsequent holder of the loan note, if the school has knowledge of the holder's identity).

(b) *Treatment by lenders or holders.* (1) A holder of a HEAL loan must treat a refund payment received from a HEAL school as a downward adjustment in the principal amount of the loan.

(2) When a lender receives a school refund check for a loan it no longer holds, the lender must transfer that payment to the holder of the loan and either inform the borrower about the refund check and where it was sent or, if the borrower's address is unknown, notify the current holder that the borrower was not informed. The current holder must provide the borrower with a written notice of the refund payment.

(Approved by the Office of Management and Budget under control number 0915–0108)

[48 FR 38988, Aug. 26, 1983, as amended at 57 FR 28795, June 29, 1992]

Subpart D—The Lender and Holder

§ 60.30 Which organizations are eligible to apply to be HEAL lenders and holders?

(a) A HEAL lender may make and hold loans under the HEAL program.

(b) The following types of organizations are eligible to apply to the Secretary to be HEAL lenders:

(1) A financial or credit institution (including a bank, savings and loan association, credit union, or insurance company) which is subject to examination and supervision in its capacity as a lender by an agency of the United States or of the State in which it has its principal place of business;

(2) A pension fund approved by the Secretary;

(3) An agency or instrumentality of a State;

(4) A HEAL school; and

(5) A private nonprofit entity, designated by the State, regulated by the State, and approved by the Secretary.

(c) The following types of organizations are eligible to apply to the Secretary to be HEAL holders:

(1) Public entities in the business of purchasing student loans;

(2) The Student Loan Marketing Association (popularly known as ''Sallie Mae''); and

(3) Other eligible lenders.

(d) HEAL holders must comply with any provisions in the regulations required of HEAL lenders including, but not limited to, provisions regarding applications, contracts, and due diligence.

[48 FR 38988, Aug. 26, 1983, as amended at 57 FR 28795, June 29, 1992]

§ 60.31 The application to be a HEAL lender or holder.

(a) In order to be a HEAL lender or holder, an eligible organization must submit an application to the Secretary annually.

(b) In determining whether to enter into an insurance contract with an applicant and what the terms of that contract should be, the Secretary may consider the following criteria:

(1) Whether the applicant is capable of complying with the requirements in the HEAL regulations applicable to lenders and holders;

(2) The amount and rate of loans which are currently delinquent or in default, if the applicant has had prior experience with similar Federal or State student loan programs; and

(3) The financial resources of the applicant.

(c) The applicant must develop and follow written procedures for making, servicing and collecting HEAL loans. These procedures must be reviewed during the biennial audit required by § 60.42(d). If the applicant uses procedures more stringent than those required by §§ 60.34 and 60.35 for its other loans of comparable dollar value, on which it has no Federal, State, or other third party guarantee, it must include those more stringent procedures in its written procedures for servicing and collecting its HEAL loans.

(d) The applicant must submit sufficient materials with his or her application to enable the Secretary to fairly

evaluate the application in accordance with these criteria.

(Approved by the Office of Management and Budget under control numbers 0915–0034 and 0915–0108)

[48 FR 38988, Aug. 26, 1983, as amended at 52 FR 747, Jan. 8, 1987; 57 FR 28796, June 29, 1992]

§ 60.32 The HEAL lender or holder insurance contract.

(a)(1) If the Secretary approves an application to be a HEAL lender or holder, the Secretary and the lender or holder must sign an insurance contract. Under this contract, the lender or holder agrees to comply with all the laws, regulations, and other requirements applicable to its participation in the HEAL program and the Secretary agrees to insure each eligible HEAL loan held by the lender or holder against the borrower's default, death, total and permanent disability, bankruptcy under chapter 11 or 13 of the Bankruptcy Act, or bankruptcy under chapter 7 of the Bankruptcy Act when the borrower files a complaint to determine the dischargeability of the HEAL loan. The Secretary's insurance covers 100 percent of the lender's or holder's losses on both unpaid principal and interest, except to the extent that a borrower may have a defense on the loan other than infancy.

(2) HEAL insurance, however, is not unconditional. The Secretary issues HEAL insurance on the implied representations of the lender that all the requirements for the initial insurability of the loan have been met. HEAL insurance is further conditioned upon compliance by the holder of the loan with the HEAL statute and regulations, the lender's or holder's insurance contract, and its own loan management procedures set forth in writing pursuant to § 60.31(c). The contract may contain a limit on the duration of the contract and the number or amount of HEAL loans a lender may make or hold. Each HEAL lender has either a standard insurance contract or a comprehensive insurance contract with the Secretary, as described below.

(b) *Standard insurance contract.* A lender with a standard insurance contract must submit to the Secretary a borrower's loan application for HEAL insurance on each loan that the lender determines to be eligible. The Secretary notifies the lender whether the loan is or is not insurable, the amount of the insurance, and the expiration date of the insurance commitment. A loan which has been disbursed under a standard contract of insurance prior to the Secretary's approval of the application is considered not to have been insured.

(c)(1) *Comprehensive insurance contract.* A lender with a comprehensive insurance contract may disburse a loan without submitting an individual borrower's loan application to the Secretary for approval. All eligible loans made by a lender with this type of contract are insured immediately upon disbursement.

(2) The Secretary will revoke the comprehensive contract of any lender who utilizes procedures which are inconsistent with the HEAL statute and regulations, the lender's insurance contract, or its own loan management procedures set forth in writing pursuant to § 60.31(c), and require that such lenders disburse HEAL loans only under a standard contract. When the Secretary determines that the lender is in compliance with the HEAL statute and regulations and its own loan management procedures set forth in writing pursuant to § 60.31(c), the lender may reapply for a comprehensive contract.

(3) In providing comprehensive contracts, the Secretary shall give priority to eligible lenders that:

(i) Make loans to students at interest rates below the rates prevailing during the period involved; or

(ii) Make loans under terms that are otherwise favorable to the student relative to the terms under which eligible lenders are generally making loans during the period involved.

(Approved by the Office of Management and Budget under control number 0915–0108)

[48 FR 38988, Aug. 26, 1983, as amended at 52 FR 747, Jan. 8, 1987; 56 FR 42701, Aug. 29, 1991; 57 FR 28796, June 29, 1992]

§ 60.33 Making a HEAL loan.

The loan-making process includes the processing of necessary forms, the approval of a borrower for a loan, determination of a borrower's creditworthiness, the determination of the loan

amount (not to exceed the amount approved by the school), the explanation to a borrower of his or her responsibilities under the loan, the execution of the promissory note, and the disbursement of the loan proceeds. A lender may rely in good faith upon statements of an applicant and the HEAL school contained in the loan application papers, except where those statements are in conflict with information obtained from the report on the applicant's credit history, or other information available to the lender. Except where the statements are in conflict with information obtained from the applicant's credit history or other information available to the lender, a lender making loans to nonstudent borrowers may rely in good faith upon statements by the borrower and authorizing officials of internship, residency, or other programs for which a borrower may receive a deferment.

(a) *Processing of forms.* Before making a HEAL loan, a lender must determine that all required forms have been completed by the borrower, the HEAL school, the lender, and the authorized official for an internship, a residency, or other deferment activity.

(b) *Approval of borrower.* A lender may make a HEAL loan only to an eligible student or nonstudent borrower.

(c) *Lender determination of the borrower's creditworthiness.* The lender may make HEAL loans only to an applicant that the lender has determined to be creditworthy. This determination must be made at least once for each academic year during which the applicant applies for a HEAL loan. An applicant will be determined to be ''creditworthy'' if he or she has a repayment history that has been satisfactory on any loans on which payments have become due. The lender may not determine that an applicant is creditworthy if the applicant is currently in default on any loan (commercial, consumer, or educational) until the delinquent account is made current or satisfactory arrangements are made between the affected lender(s) and the HEAL applicant. The lender must obtain documentation, such as a letter from the authorized official(s) of the affected lender(s) or a corrected credit report indicating that the HEAL applicant has taken satisfactory actions to bring the account into good standing. It is the responsibility of the HEAL loan applicant to assure that the lender receives each such documentation. No loan may be made to an applicant who is delinquent on any Federal debt until the delinquent account is made current or satisfactory arrangements are made between the affected agency and the HEAL applicant. The lender must receive a letter from the authorized Federal official of the affected Federal agency stating that the borrower has taken satisfactory actions to bring the account into good standing. It is the responsibility of the loan applicant to assure that the lender has received each such letter. The absence of any previous credit, however, is not an indication that the applicant is not creditworthy and is not to be used as a reason to deny the status of creditworthy to an applicant. The lender must determine the creditworthiness of the applicant using, at a minimum, the following:

(1) A report of the applicant's credit history obtained from an appropriate consumer credit reporting agency, which must be used in making the determinations required by paragraph (c) of this section; and

(2) For student applicants only, the certification made by the applicant's school under § 60.51(e).

(d) *Determination of loan amount.* A lender may not make a HEAL loan in an amount that exceeds the permissible annual and aggregate maximums described in § 60.10.

(e) *Promissory note.* (1) Each loan must be evidenced by a promissory note approved by the Secretary. A lender must obtain the Secretary's prior approval of the note form before it makes a HEAL loan evidenced by a promissory note containing any deviation from the provisions of the form most currently approved by the Secretary. The lender must give the borrower a copy of each executed note.

(2) The lender must explain to the borrower that the loan must be repaid and that the loan proceeds may be applied toward educational expenses only.

(f) *Disbursement of HEAL loan.* (1) A lender must disburse HEAL loan proceeds:

(i) To a student borrower, by means of a check or draft payable jointly to the student borrower and the HEAL school. Except where a lender is also a school, a lender must mail the check or draft to the school. A lender may not disburse the loan proceeds earlier than is reasonably necessary to meet the cost of education for the period for which the loan is made.

(ii) To a nonstudent borrower, by means of a check or draft payable to the borrower. However, when a previous loan is held by a different lender, the current lender must make the HEAL loan disbursement check or draft payable jointly to the borrower and the holder of the previous HEAL loan for which interest is payable.

(2) Effective July 1, 1987, a lender must disburse the HEAL loan proceeds in two or more installments unless the loan is intended to cover a period of no more than one-half an academic year. The amount disbursed at one time must correspond to the borrower's educational expenses for the period for which the disbursement is made, and must be indicated by the school on the borrower's application. If the loan is intended for more than one-half an academic year, the school must indicate on the borrower's application both the approximate dates of disbursement and the amount the borrower will need on each such date. In no case may the lender disburse the proceeds earlier than is reasonably necessary to meet the costs of education for the period for which the disbursement or the loan is made.

(g) If the lender determines that the applicant is not creditworthy, pursuant to paragraph (c) of this section, the lender must not approve the HEAL loan request. If the applicant is a student, the lender must notify the applicant and the applicant's school named on the application form of the denial of a HEAL loan, stating the reason for the denial.

(h) The lender must report a borrower's HEAL indebtedness to one or more national credit bureaus within 120 days of the date the final disbursement on the loan is made.

(Approved by the Office of Management and Budget under control numbers 0915–0043, 0915–0108, and 0915–0144)

[48 FR 38988, Aug. 26, 1983, as amended at 51 FR 30645, Aug. 28, 1986; 52 FR 748, Jan. 8, 1987; 57 FR 28796, June 29, 1992; 58 FR 67349, Dec. 21, 1993]

§ 60.34 HEAL loan account servicing.

HEAL loan account servicing involves the proper maintenance of records, and the proper review and management of accounts. Generally accepted account servicing standards ensure that collections are received and accounted for, delinquent accounts are identified promptly, and reports are produced comparing actual results to previously established objectives.

(a) *Borrower inquiries.* A lender or holder must respond on a timely basis to written inquiries and other communications from a borrower and any endorser of a HEAL loan.

(b) *Conversion of loan to repayment status.* (1) At least 30 and not more than 60 days before the commencement of the repayment period, the lender or holder must contact the borrower in writing to establish the terms of repayment. Lenders or holders may not charge borrowers for the additional interest or other charges, penalties, or fees that accrue when a lender or holder does not contact the borrower within this time period and a late conversion results.

(2) Terms of repayment are established in a written schedule that is made a part of, and subject to the terms of, the borrower's original HEAL note.

(3) The lender or holder may not surrender the original promissory note to the borrower until the loan is paid in full. At that time, the lender or holder must give the borrower the original promissory note.

(c) *Borrower contacts.* The lender or holder must notify each borrower by a written contact, which has an address correction request on the envelope, of the balance owed for principal, interest, insurance premiums, and any other charges or fees owed to the lender, at least every 6 months from the time the loan is disbursed. The lender or holder

must use this notice to remind the borrower of the option, without penalty, to pay all or part of the principal and accrued interest at any time.

(d) *Skip-tracing.* If, at any time, the lender or holder is unable to locate a borrower, the lender or holder must initiate skip-tracing procedures as described in § 60.35(a)(2).

(Approved by the Office of Management and Budget under control numbers 0915–0043 and 0915–0108)

[48 FR 38988, Aug. 26, 1983, as amended at 52 FR 748, Jan. 8, 1987; 57 FR 28796, June 29, 1992]

§ 60.35 HEAL loan collection.

A lender or holder must exercise due diligence in the collection of a HEAL loan with respect to both a borrower and any endorser. In order to exercise due diligence, a lender or holder must implement the following procedures when a borrower fails to honor his or her payment obligations:

(a)(1) When a borrower is delinquent in making a payment, the lender or holder must remind the borrower within 15 days of the date the payment was due by means of a written contact. If payments do not resume, the lender or holder must contact both the borrower and any endorser at least 3 more times at regular intervals during the 120-day delinquent period following the first missed payment of that 120-day period. The second demand notice for a delinquent account must inform the borrower that the continued delinquent status of the account will be reported to consumer credit reporting agencies if payment is not made. Each of the required four contacts must consist of at least a written contact which has an address correction request on the envelope. The last contact must consist of a telephone contact, in addition to the required letter, unless the borrower cannot be contacted by telephone. The lender or holder may choose to substitute a personal contact for a telephone contact. A record must be made of each attempt to contact and each actual contact, and that record must be placed in the borrower's file. Each contact must become progressively firmer in tone. If the lender or holder is unable to locate the borrower and any endorser at any time during the period when the borrower is delinquent, the lender or holder must initiate the skip-tracing procedures described in paragraph (a)(2) of this section.

(2) If the lender or holder is unable to locate either the borrower or the endorser at any time, the lender or holder must initiate and use skip-tracing activities which are at least as extensive and effective as those it uses to locate borrowers delinquent in the repayment of its other loans of comparable dollar value. To determine the correct address of the borrower, these skip-tracing procedures should include, but need not be limited to, contacting any other individual named on the borrower's HEAL application or promissory note, using such sources as telephone directories, city directories, postmasters, drivers license records in State and local government agencies, records of members of professional associations, consumer credit reporting agencies, skip locator services, and records at any school attended by the borrower. All skip-tracing activities used must be documented. This documentation must consist of a written record of the action taken and its date and must be presented to the Secretary when requesting preclaim assistance or when filing a default claim for HEAL insurance.

(b) When a borrower is 90 days delinquent in making a payment, the lender or holder must immediately request preclaim assistance from the Public Health Service. The Secretary does not pay a default claim if the lender or holder fails to request preclaim assistance.

(c) Prior to the filing of a default claim, a lender or holder must use, at a minimum, collection practices that are at least as extensive and effective as those used by the lender or holder in the collection of its other loans. These practices must include, but need not be limited to:

(1) Using collection agents, which may include its own collection department or other internal collection agents;

(2) Immediately notifying an appropriate consumer credit reporting agency regarding accounts overdue by more than 60 days; and

(3) Commencing and prosecuting an action for default unless:

(i) In the determination of the Secretary that:

(A) The lender or holder has made reasonable efforts to serve process on the borrower involved and has been unsuccessful in these efforts; or

(B) Prosecution of such an action would be fruitless because of the financial or other circumstances of the borrower;

(ii) For loans made before November 4, 1988, the loan involved was made in an amount of less than $5,000; or

(iii) For loans made on or after November 4, 1988, the loan involved was made in an amount of less than $2,500.

(d) If the Secretary's preclaim assistance locates the borrower, the lender or holder must implement the loan collection procedures described in this section. When the Secretary's preclaim assistance is unable to locate the borrower, a default claim may be filed by the lender as described in §60.40. The Secretary does not pay a default claim if the lender or holder has not complied with the HEAL statute and regulations or the lender's or holder's insurance contract.

(e) If a lender or holder does not sue the borrower, it must send a final demand letter to the borrower and any endorser at least 30 days before a default claim is filed.

(f) If a lender or holder sues a defaulted borrower or endorser, it may first apply the proceeds of any judgment against its reasonable attorney's fees and court costs, whether or not the judgment provides for these fees and costs.

(g) *Collection of chapter 7 bankruptcies.* (1) If a borrower files for bankruptcy under chapter 7 of the Bankruptcy Act and does not file a complaint to determine the dischargeability of the HEAL loan, the lender or holder is responsible for monitoring the bankruptcy case in order to pursue collection of the loan after the bankruptcy proceedings have been completed.

(i) For any loan for which the lender or holder had not begun to litigate against the borrower prior to the imposition of the automatic stay, the period of the automatic stay is to be considered as an extended forbearance authorized by the Secretary, in addition to the 2-year period of forbearance which lenders and holders are authorized to grant without prior approval from the Secretary. Only periods of delinquency following the date of receipt (as documented by a date stamp) of the discharge of debtor notice (or other written notification from the court or the borrower's attorney of the end of the automatic stay imposed by the Bankruptcy Court) can be included in determining default, as described in §60.40(c)(1)(i). The lender or holder must attempt to reestablish repayment terms with the borrower in writing no more than 30 days after receipt of the discharge of debtor notice (or other written notification from the court or the borrower's attorney of the end of the automatic stay imposed by the Bankruptcy Court), in accordance with the procedures followed at the end of a forbearance period. If the borrower fails to make a payment as scheduled, the lender or holder must attempt to obtain repayment through written and telephone contacts in accordance with the intervals established in paragraph (a)(1) of this section, and must perform the other HEAL loan collection activities required in this section, before filing a default claim.

(ii) For any loan for which the lender or holder had begun to litigate against the borrower prior to the imposition of the automatic stay, the lender or holder must, upon written notification from the court or the borrower's attorney that the bankruptcy proceedings have been completed, either resume litigation or treat the loan in accordance with paragraph (g)(1)(i) of this section.

(2) If the lender or holder has not received written notification of discharge within 12 months of the date that the borrower filed for bankruptcy, the lender or holder must contact the court and the borrower's attorney (if known) within 30 days to determine if the bankruptcy proceedings have been completed. If no response is received within 30 days of the date of these contacts, the lender or holder must resume its collection efforts, in accordance with paragraph (g)(1) of this section. If a written response from the court or the borrower's attorney indicates that the bankruptcy proceedings are still underway, the lender or holder is not

to pursue further collection efforts until receipt of written notice of discharge, except that follow-up in accordance with this paragraph must be done at least once every 12 months until the bankruptcy proceedings have been completed.

(3) If, despite the lender or holder's compliance with required procedures, a loan subject to the requirements of paragraph (g)(1) of this section is discharged, the lender or holder must file a claim with the Secretary within 10 days of the initial date of receipt (as documented by a date stamp) of written notification of the discharge from the court or the borrower's attorney, in accordance with the procedures set forth in § 60.40(c)(4). The lender or holder also must file with the bankruptcy court an objection to the discharge of the HEAL loan, and must include with the claim documentation showing that the bankruptcy proceedings were handled properly and expeditiously (e.g., all documents sent to or received from the bankruptcy court, including evidence which shows the period of the bankruptcy proceedings).

(Approved by the Office of Management and Budget under control numbers 0915–0100 and 0915–0108)

[48 FR 38988, Aug. 26, 1983, as amended at 52 FR 749, Jan. 8, 1987; 57 FR 28796, June 29, 1992]

§ 60.36 Consequence of using an agent.

The delegation of functions to a servicing agency or other party does not relieve a lender or holder of its responsibilities under the HEAL program.

[57 FR 28797, June 29, 1992]

§ 60.37 Forbearance.

(a) *Forbearance* means an extension of time for making loan payments or the acceptance of smaller payments than were previously scheduled to prevent a borrower from defaulting on his or her payment obligations. A lender or holder must notify each borrower of the right to request forbearance.

(1) Except as provided in paragraph (a)(2) of this section, a lender or holder must grant forbearance whenever the borrower is temporarily unable to make scheduled payments on a HEAL loan and the borrower continues to repay the loan in an amount commensurate with his or her ability to repay the loan. Any circumstance which affects the borrower's ability to repay the loan must be fully documented.

(2) If the lender or holder determines that the default of the borrower is inevitable and that forbearance will be ineffective in preventing default, the lender or holder may submit a claim to the Secretary rather than grant forbearance. If the Secretary is not in agreement with the determination of the lender or holder, the claim will be returned to the lender or holder as disapproved and forbearance must be granted.

(b) A lender or holder must exercise forbearance in accordance with terms that are consistent with the 25- and 33-year limitations on the length of repayment (described in § 60.11) if the lender or holder and borrower agree in writing to the new terms. Each forbearance period may not exceed 6 months.

(c) A lender or holder may also exercise forbearance for periods of up to 6 months in accordance with terms that are inconsistent with the minimum annual payment requirement if the lender or holder complies with the requirements listed in paragraphs (c) (1) through (4) of this section. Subsequent renewals of the forbearance must also be documented in accordance with the following requirements:

(1) The lender or holder must reasonably believe that the borrower intends to repay the loan but is currently unable to make payments in accordance with the terms of the loan note. The lender or holder must state the basis for its belief in writing and maintain that statement in its loan file on that borrower.

(2) Both the borrower and an authorized official of the lender or holder must sign a written agreement of forbearance.

(3) If the agreement between the borrower and lender or holder provides for deferment of all payments, the lender or holder must contact the borrower at least every 3 months during the period of forbearance in order to remind the borrower of the outstanding obligation to repay.

(4) The total period of forbearance (with or without interruption) granted

by the lender or holder to any borrower must not exceed 2 years. However, when the borrower and the lender or holder believe that there are bona fide reasons why this period should be extended, the lender or holder may request a reasonable extension beyond the 2-year period from the Secretary. This request must document the reasons why the extension should be granted. The lender or holder may grant the extension for the approved time period if the Secretary approves the extension request.

(Approved by the Office of Management and Budget under control number 915–0108)

[57 FR 28797, June 29, 1992]

§60.38 Assignment of a HEAL loan.

A HEAL note may not be assigned except to another HEAL lender, the Student Loan Marketing Association (popularly known as ''Sallie Mae''), or a public entity in the business of purchasing student loans, and except as provided in §60.40. In this section ''seller'' means any kind of assignor and ''buyer'' means any kind of assignee.

(a) *Procedure.* A HEAL note assigned from one lender or holder to another must be subject to a blanket endorsement together with other HEAL notes being assigned or must individually bear effective words of assignment. Either the blanket endorsement or the HEAL note must be signed and dated by an authorized official of the seller. Within 30 days of the transaction, the buyer must notify the following parties of the assignment:

(1) The Secretary;

(2) The borrower. The notice to the borrower must contain a clear statement of all the borrower's rights and responsibilities which arise from the assignment of the loan, including a statement regarding the consequences of making payments to the seller subsequent to receipt of the notice; and

(3) The borrower's school, as shown on the application form supporting the loan purchased by the buyer, if the borrower is enrolled in school.

(b) *Risks assumed by the buyer.* Upon acquiring a HEAL loan, a new holder assumes responsibility for the consequences of any previous violations of applicable statutes, regulations, or the terms of the note except for defects under §60.41(d). A HEAL note is not a negotiable instrument, and a subsequent holder is not a holder in due course. If the borrower has a valid legal defense that could be asserted against the previous holder, the borrower can also assert the defense against the new holder. In this situation, if the new holder files a default claim on a loan, the Secretary denies the default claim to the extent of the borrower's defense. Furthermore, when a new holder files a claim on a HEAL loan, it must provide the Secretary with the same documentation that would have been required of the original lender.

(c) *Warranty.* Nothing in this section precludes the buyer of a HEAL loan from obtaining a warranty from the seller covering certain future reductions by the Secretary in computing the amount of insurable loss, if any, on a claim filed on the loan. The warranty may only cover reductions which are attributable to an act or failure to act of the seller or other previous holder. The warranty may not cover matters for which the buyer is charged with responsibility under the HEAL regulations.

(d) *Bankruptcy.* If a lender or holder assigns a HEAL loan to a new holder, or a new holder acquires a HEAL loan under 20 U.S.C. 1092a (the Combined Payment Plan authority), and the previous holder(s) subsequently receives court notice that the borrower has filed for bankruptcy, the previous holder(s) must forward the bankruptcy notice to the purchaser within 10 days of the initial date of receipt, as documented by a date stamp, except that if it is a chapter 7 bankruptcy with no complaint for dismissal, the previous holder(s) must file the notice with the purchaser within 30 days of the initial date of receipt, as documented by a date stamp. The previous holder(s) also must file a statement with the court notifying it of the change of ownership. Notwithstanding the above, the current holder will not be held responsible for any loss due to the failure of the prior holder(s) to meet the deadline for giving notice if such failure occurs

after the current holder purchased the loan.

(Approved by the Office of Management and Budget under control numbers 0915–0034 and 0915–0108)

[48 FR 38988, Aug. 26, 1983, as amended at 52 FR 749, Jan. 8, 1987; 56 FR 42701, Aug. 29, 1991; 57 FR 28797, June 29, 1992]

§ 60.39 Death and disability claims.

(a) *Death*. The Secretary will discharge a borrower's liability on the loan in accordance with section 738 of the Act upon the death of the borrower. The holder of the loan may not attempt to collect on the loan from the borrower's estate or any endorser. The holder must secure a certification of death or whatever official proof is conclusive under State law. The holder must return to the sender any payments, except for refunds under § 60.21, received from the estate of the borrower or paid on behalf of the borrower after the date of death.

(b) *Disability*. (1) The Secretary will discharge a borrower's liability on the loan in accordance with section 738 of the Act if the borrower is found to be permanently and totally disabled on recommendation of the holder of the loan and as supported by whatever medical certification the Secretary may require. A borrower is totally and permanently disabled if he or she is unable to engage in any substantial gainful activity because of a medically determinable impairment, which the Secretary expects to continue for a long and indefinite period of time or to result in death.

(2) After being notified by the borrower or the borrower's representative that the borrower claims to be totally and permanently disabled, the holder of the loan may not attempt to collect on the loan from the borrower or any endorser. The holder must promptly request that the Secretary determine whether a borrower has become totally and permanently disabled. With its request, the holder must submit medical evidence no more than 4 months old that it has obtained from the borrower or the borrower's representative.

(3) If the Secretary determines that the borrower is totally and permanently disabled, the lender or holder must return to the borrower any payments, except for refunds under § 60.21, that it receives after being notified that the borrower claims to be totally and permanently disabled.

(Approved by the Office of Management and Budget under control number 0915–0108)

[48 FR 38988, Aug. 26, 1983, as amended at 57 FR 28797, June 29, 1992]

§ 60.40 Procedures for filing claims.

(a) A lender or holder must file an insurance claim on a form approved by the Secretary. The lender or holder must attach to the claim all documentation necessary to litigate a default, including any documents required to be submitted by the Federal Claims Collection Standards, and which the Secretary may require. Failure to submit the required documentation and to comply with the HEAL statute and regulations or the lender's or holder's insurance contract will result in a claim not being honored. The Secretary may deny a claim that is not filed within the period specified in this section. The Secretary requires for all claims at least the following documentation:

(1) The original promissory note;

(2) An assignment to the United States of America of all right, title, and interest of the lender or holder in the note;

(3) The loan application;

(4) The history of the loan activities from the date of loan disbursement through the date of claim, including any payments made; and

(5) A Borrower Status Form (HRSA–508), documenting each deferment granted under § 60.12 or a written statement from an appropriate official stating that the borrower was engaged in an activity for which he or she was entitled to receive a deferment at the time the deferment was granted.

(b) The Secretary's payment of a claim is contingent upon receipt of all required documentation and an assignment to the United States of America of all right, title, and interest of the lender or holder in the note underlying the claim. The lender or holder must warrant that the loan is eligible for HEAL insurance.

(c) In addition, the lender or holder must comply with the following requirements for the filing of default,

death, disability, and bankruptcy claims:

(1) *Default claims. Default* means the persistent failure of the borrower to make a payment when due or to comply with other terms of the note or other written agreement evidencing a loan under circumstances where the Secretary finds it reasonable to conclude that the borrower no longer intends to honor the obligation to repay the loan. In the case of a loan repayable (or on which interest is payable) in monthly installments, this failure must have persisted for 120 days. In the case of a loan repayable (or on which interest is payable) in less frequent installments, this failure must have persisted for 180 days. If, for a particular loan, an automatic stay is imposed on collection activities by a Bankruptcy Court, and the lender or holder receives written notification of the automatic stay prior to initiating legal proceedings against the borrower, the 120- or 180-day period does not include any period prior to the end of the automatic stay.

(i) If a lender or holder determines that it is not appropriate to commence and prosecute an action against a default borrower pursuant to §60.35(c)(3), it must file a default claim with the Secretary within 30 days after a loan has been determined to be in default.

(ii) If a lender files suit against a defaulted borrower and does not pursue collection of the judgment obtained as a result of the suit, it must file a default claim with the Secretary within 60 days of the date of issuance of the judgment. If a lender or holder files suit against a defaulted borrower, and pursues collection of the judgment obtained as a result of the suit, these collection activities must begin within 60 days of the date of issuance of the judgment. If the lender or holder is unable to collect the full amount of principal and interest owed, a claim must be filed within 30 days of completion of the post-judgment collection activities. In either case, the lender or holder must assign the judgment to the Secretary as part of the default claim.

(iii) In addition to the documentation required for all claims, the lender or holder must submit with its default claim at least the following:

(A) Repayment schedule(s);

(B) A collection history, if any;

(C) A final demand letter;

(D) The original or a copy of all correspondence relevant to the HEAL loan to or from the borrower (whether received by the original lender, a subsequent holder, or an independent servicing agent);

(E) A claims collection litigation report; and

(F) If the defaulted borrower filed for bankruptcy under chapter 7 of the Bankruptcy Act and did not file a complaint to determine the dischargeability of the loan, all documents sent to or received from the bankruptcy court, including evidence which shows the period of the bankruptcy proceedings.

(iv) If a lender or holder files a default claim on a loan and subsequently receives written notice from the court or the borrower's attorney that the borrower has filed for bankruptcy under chapter 11 or 13 of the Bankruptcy Act, or under chapter 7 with a complaint to determine the dischargeability of the loan, the lender or holder must file that notice with the Secretary within 10 days of the lender or holder's initial date of receipt, as documented by a date stamp. If the borrower is declaring bankruptcy under chapter 7 of the Bankruptcy Act, and has not filed a complaint to determine the dischargeability of the loan, the lender or holder must file the written notice with the Secretary within 30 days of the lender's or holder's initial date of receipt, as documented by a date stamp. If the Secretary has not paid the claim at the time the lender or holder receives that notice, upon receipt of the notice, the lender or holder must file with the bankruptcy court a proof of claim, if applicable, and an objection to the discharge or compromise of the HEAL loan. If the Secretary has paid the claim, the lender or holder must file a statement with the court notifying it that the loan is owned by the Secretary.

(2) *Death claims.* A lender or holder must file a death claim with the Secretary within 30 days after the lender or holder obtains documentation that a borrower is dead. In addition to the documentation required for all claims,

the lender or holder must submit with its death claim those documents which verify the death, including an official copy of the Death Certificate.

(3) *Disability claims.* A lender or holder must file a disability claim with the Secretary within 30 days after it has been notified that the Secretary has determined a borrower to be totally and permanently disabled. In addition to the documentation required for all claims, the lender or holder must submit with its claim evidence of the Secretary's determination that the borrower is totally and permanently disabled.

(4) *Bankruptcy claims.* For a bankruptcy under chapter 11 or 13 of the Bankruptcy Act, or a bankruptcy under chapter 7 of the Bankruptcy Act when the borrower files a complaint to determine the dischargeability of the HEAL loan, the current holder must file a claim with the Secretary within 10 days of the initial date of receipt of court notice or written notice from the borrower's attorney that the borrower has filed for bankruptcy under chapter 11 or chapter 13, or has filed a complaint to determine the dischargeability of the HEAL loan under chapter 7. The initial date of receipt of the written notice must be documented by a date stamp. The lender or holder must file with the bankruptcy court a proof of claim, if applicable, and an objection to the discharge or compromise of the HEAL loan. In addition to the documentation required for all claims, with its claim the lender or holder must submit to the Secretary at least the following:

(i) Repayment schedule(s);

(ii) A collection history, if any;

(iii) A proof of claim, where applicable;

(iv) An assignment to the United States of America of its proof of claim, where applicable;

(v) All pertinent documents sent to or received from the bankruptcy court; and

(vi) A statement of any facts of which the lender is aware that may form the basis for an objection to the bankrupt's discharge or an exception to the discharge.

(vii) The notice of the first meeting or creditors, or an explanation as to why this is not included;

(viii) In cases where there is defective service, a declaration or affidavit attesting to the fact that the lender or holder was not directly served with the notice of meeting of creditors. This declaration or affidavit must also indicate when and how the lender or holder learned of the bankruptcy; and

(ix) In cases where there is defective service due to the borrower's failure to list the proper creditor, a copy of the letter sent to the borrower at the time of purchase of the HEAL loan by the current holder, or a sample letter with documentation indicating when the letter was sent to the borrower.

(Approved by the Office of Management and Budget under control numbers 0915–0036 and 0915–0108)

[48 FR 38988, Aug. 26, 1983, as amended at 52 FR 750, Jan. 8, 1987; 56 FR 42701, Aug. 29, 1991; 57 FR 28798, June 29, 1992]

§ 60.41 Determination of amount of loss on claims.

(a) *General rule.* HEAL insurance covers the unpaid balance of principal and interest on an eligible HEAL loan, less the amount of any judgment collected pursuant to default proceedings commenced by the eligible lender or holder involved. In determining whether to approve an insurance claim for payment, the Secretary considers legal defects affecting the initial validity or insurability of the loan. The Secretary also deducts from a claim any amount that is not a legally enforceable obligation of the borrower except to the extent that the defense of infancy applies. The Secretary further considers whether all holders of the loan have complied with the requirements of the HEAL regulations, including those concerned with the making, servicing, and collecting of the loan, the timely filing of claims, and the submission of documents with a claim.

(b) *Special rules for loans acquired by assignment.* If a claim is filed by a lender or holder that obtained a loan by assignment, that lender or holder is not entitled to any payment under this section greater than that to which a previous holder would have been entitled. In particular, the Secretary deducts

from the claim any amounts that are attributable to payments made by the borrower to a prior holder of the loan before the borrower received proper notice of the assignment of the loan.

(c) *Special rules for loans made by school lenders.* (1) If the loan for which a claim is filed was originally made by a school and the claim is filed by that school, the Secretary deducts from the claim an amount equal to any unpaid refund that the school owes the borrower.

(2) If the loan for which a claim is filed was originally made by a school but the claim is filed by another lender of holder that obtained the note by assignment, the Secretary deducts from the claim an amount equal to any unpaid refund that the school owed the borrower prior to the assignment.

(d) *Circumstances under which defects in claims may be cured or excused.* The Secretary may permit a lender or holder to cure certain defects in a specified manner as a condition for payment of a default claim. The Secretary may excuse certain defects if the holder submitting the default claim satisfies the Secretary that the defect did not contribute to the default or prejudice the Secretary's attempt to collect the loan from the borrower. The Secretary may also excuse certain defects if the defect arose while the loan was held by another lender or holder and the holder submitting the default claim satisfies the Secretary that the assignment of the loan was an arm's length transaction, that the present holder did not know of the defect at the time of the sale and that the present holder could not have become aware of the defect through an examination of the loan documents.

(e) *Payment of insured interest.* The payment on an approved claim covers the unpaid principal balance and interest that accrues through the date the claim is paid, except:

(1) If the lender or holder failed to submit a claim within the required period after the borrower's default; death; total and permanent disability; or filing of a petition in bankrupty under chapter 11 or 13 of the Bankruptcy Act, or under chapter 7 where the borrower files a complaint to determine the dischargeability of the HEAL loan; the Secretary does not pay interest that accrued between the end of that period and the date the Secretary received the claim.

(2) If the Secretary returned the claim to the lender or holder for additional documentation necessary for the approval of the claim, the Secretary pays interest only for the first 30 days following the return of the claim to the lender or holder.

[48 FR 38988, Aug. 26, 1983, as amended at 56 FR 42702, Aug. 29, 1991; 57 FR 28798, June 29, 1992]

§ 60.42 Records, reports, inspection, and audit requirements for HEAL lenders and holders.

(a) *Records.* (1) A lender or holder must keep complete and accurate records of each HEAL loan which it holds. The records must be organized in a way that permits them to be easily retrievable and allows the ready identification of the current status of each loan. The required records include:

(i) The loan application;

(ii) The original promissory note;

(iii) The repayment schedule agreement;

(iv) Evidence of each disbursement of loan proceeds;

(v) Notices of changes in a borrower's address and status as a full-time student;

(vi) Evidence of the borrower's eligibility for a deferment;

(vii) The borrower's signed statement describing his or her rights and responsibilities in connection with a HEAL loan;

(viii) The documents required for the exercise of forbearance;

(ix) Documentation of the assignment of the loan; and

(x) Evidence of a borrower's creditworthiness, including the borrower's credit report.

(2) The lender or holder must maintain for each borrower a payment history showing the date and amount of each payment received on the borrower's behalf, and the amounts of each payment attributable to principal and interest. A lender or holder must

also maintain for each loan a collection history showing the date and subject of each communication with a borrower or endorser for collection of a delinquent loan. Furthermore, a lender or holder must keep any additional records which are necessary to make any reports required by the Secretary.

(3) A lender or holder must retain the records required for each loan for not less than 5 years following the date the loan is repaid in full by the borrower. However, in particular cases the Secretary may require the retention of records beyond this minimum period. A lender or holder must keep the original copy of an unpaid promissory note, but may store all other records in microform or computer format.

(4) The lender or holder must maintain accurate and complete records on each HEAL borrower and related school activities required by the HEAL program. All HEAL records shall be maintained under security and protected from fire, flood, water leakage, other environmental threats, electronic data system failures or power fluctuations, unauthorized intrusion for use, and theft.

(b) *Reports.* A lender or holder must submit reports to the Secretary at the time and in the manner required by the Secretary.

(c) *Inspections.* Upon request, a lender or holder must afford the Secretary, the Comptroller General of the United States, and any of their authorized representatives access to its records in order to assure the correctness of its reports.

(d) The lender or holder must comply with the Department's biennial audit requirements of section 705 of the Act.

(e) Any lender or holder who has information which indicates potential or actual commission of fraud or other offenses against the United States, involving these loan funds, must promptly provide this information to the appropriate Regional Office of Inspector General for Investigations.

(Approved by the Office of Management and Budget under control numbers 0915–0043 and 0915–0108)

[48 FR 38988, Aug. 26, 1983, as amended at 52 FR 750, Jan. 8, 1987; 57 FR 28798, June 29, 1992]

§ 60.43 Limitation, suspension, or termination of the eligibility of a HEAL lender or holder.

(a) The Secretary may limit, suspend, or terminate the eligibility under the HEAL program of an otherwise eligible lender or holder that violates or fails to comply with any provision of title VII, part A, subpart I of the Act as amended (42 U.S.C. 292–292p), these regulations, or agreements with the Secretary concerning the HEAL program. Prior to terminating a lender or holder's participation in the program, the Secretary will provide the entity an opportunity for a hearing in accordance with the procedures under paragraph (b) of this section.

(b) The Secretary will provide any lender or holder subject to termination with a written notice, sent by certified mail, specifying his or her intention to terminate the lender or holder's participation in the program and stating that the entity may request, within 30 days of the receipt of this notice, a formal hearing. if the entity requests a hearing, it must, within 90 days of the receipt of the notice, submit material, factual issues in dispute to demonstrate that there is cause for a hearing. These issues must be both substantive and relevant. The hearing will be held in the Washington, DC metropolitan area. The Secretary will deny a hearing if:

(1) The request for a hearing is untimely (i.e., fails to meet the 30-day requirement);

(2) The lender or holder does not provide a statement of material, factual issues in dispute within the 90-day required period; or

(3) The statement of factual issues in dispute is frivolous or inconsequential.

In the event that the Secretary denies a hearing, the Secretary will send a written denial, by certified mail, to the lender or holder setting forth the reasons for denial. If a hearing is denied, or if as a result of the hearing, termination is still determined to be necessary, the lender or holder will be terminated from participation in the program. An entity will be permitted to reapply for participation in the program when it demonstrates, and the Secretary agrees, that it is in compliance with all HEAL requirements.

(c) This section does not apply to a determination that a HEAL lender fails to meet the statutory definition of an ''eligible lender.''

(d) This section also does not apply to administrative action by the Department of Health and Human Services based on any alleged violation of:

(1) Title VI of the Civil Rights Act of 1964, which is governed by 45 CFR part 80;

(2) Title IX of the Education Amendments of 1972, which is governed by 45 CFR part 86;

(3) The Family Educational Rights and Privacy Act of 1974 (section 438 of the General Education Provisions Act, as amended), which is governed by 34 CFR part 99; or

(4) Title XI of the Right to Financial Privacy Act of 1978, Pub. L. 95–630 (12 U.S.C. 3401–3422).

(Approved by the Office of Management and Budget under control number 0915–0144)

[48 FR 38988, Aug. 26, 1983, as amended at 57 FR 28799, June 29, 1992; 58 FR 67349, Dec. 21, 1993]

Subpart E—The School

§ 60.50 Which schools are eligible to be HEAL schools?

(a) In order to participate in the HEAL program, a school must enter into a written agreement with the Secretary. In the agreement, the school promises to comply with provisions of the HEAL law and the HEAL regulations. For initial entry into this agreement and for the agreement to remain in effect, a school must satisfy the following requirements:

(1) The school must be legally authorized within a State to conduct a course of study leading to one of the following degrees:

Doctor of Medicine
Doctor of Osteopathic Medicine
Doctor of Dentistry or equivalent degree
Bachelor or Master of Science in Pharmacy or equivalent degree
Doctor of Optometry or equivalent degree
Doctor of Veterinary Medicine or equivalent degree
Doctor of Podiatric Medicine or equivalent degree
Graduate or equivalent degree in Public Health
Doctor of Chiropractic or equivalent degree
Doctoral degree of Clinical Psychology
Masters or doctoral degree in Health Administration

For the purposes of this section, the term ''State'' includes, in addition to the several States, the District of Columbia, the Commonwealth of Puerto Rico, the Commonwealth of the Northern Mariana Islands, the Virgin Islands, Guam, American Samoa, the Trust Territory of the Pacific Islands (the Republic of Palau), the Republic of the Marshall Islands, and the Federated States of Micronesia.

(2)(i) The school must be accredited by a recognized agency approved for that course of study by the Secretary of Education, as described in paragraph (a)(2)(ii) of this section, except where a school is not eligible for accreditation solely because it is too new. A new school is eligible if the Secretary of Education determines that it can reasonably expect to be accredited before the beginning of the academic year following the normal graduation date of its first entering class. The Secretary of Education makes this determination after consulting with the appropriate accrediting agency and receiving reasonable assurance to that effect.

(ii) The approved accrediting agencies are:

(A) Liaison Committee on Medical Education.

(B) American Osteopathic Association.

(C) Commission on Dental Accreditation.

(D) Council on Education of American Veterinary Medical Association.

(E) Council on Optometric Education.

(F) Council on Podiatric Medical Education.

(G) American Council on Pharmaceutical Education.

(H) Council on Education for Public Health.

(I) Council on Chiropractic Education.

(J) Accrediting Commission on Education for Health Services Administration.

(K) Committee on Accreditation of American Psychological Association.

(b) If a HEAL school undergoes a change of controlling ownership or form of control, its agreement automatically expires at the time of that change. The school must enter into a

new agreement with the Secretary in order to continue its participation in the HEAL program.

[48 FR 38988, Aug. 26, 1983, as amended at 52 FR 751, Jan. 8, 1987; 57 FR 28799, June 29, 1992]

§ 60.51 The student loan application.

When the student completes his or her portion of the student loan application and submits it to the school, the school must do the following:

(a) Accurately and completely fill out its portion of the HEAL application;

(b) Verify, to the best of its ability, the information provided by the student on the HEAL application, including, but not limited to, citizenship status and Social Security number. To comply with this requirement, the school may request that the student provide a certified copy of his or her birth certificate, his or her naturalization papers, and an original Social Security card or copy issued by the Federal Government, or other documentation that the school may require. The school must assure that the applicant's I–151 or I–551 is attached to the application, if the applicant is required to possess such identification by the United States;

(c) Certify that the student is eligible to receive a HEAL loan, according to the requirements of § 60.5;

(d) Review the financial aid transcript from each institution previously attended by the applicant on at least a half-time basis to determine whether the applicant is in default on any loans or owes a refund on any grants. The school may not approve the HEAL application or disburse HEAL funds if the borrower is in default on any loans or owes a refund on any educational grants, unless satisfactory arrangements have been made between the borrower and the affected lender or school to resolve the default or the refund on the grant. If the financial aid transcript has been requested, but has not been received at the time the applicant submits his or her first HEAL application, the school may approve the application and disburse the first HEAL installment prior to receipt of the transcript. Each financial aid transcript must include at least the following data:

(1) Student's name;

(2) Amounts and sources of loans and grants previously received by the student for study at an institution of higher education;

(3) Whether the student is in default on any of these loans, or owes a refund on any grants;

(4) Certification from each institution attended by the student that the student has received no financial aid, if applicable; and

(5) From each institution attended, the signature of an official authorized by the institution to sign such transcripts on behalf of the institution.

(e) State that it has no reason to believe that the borrower may not be willing to repay the HEAL loan;

(f) Make reasonable determinations of the maximum loan amount approvable, based on the student's circumstances. The student applicant determines the amount he or she wishes to borrow, up to this maximum amount. Only then may the school certify an eligible application. In determining the maximum loan amount approvable, the school will calculate the difference between:

(1) The total financial resources available to the applicant for his or her costs of education for the period covered by the proposed HEAL loan, and other student aid that the applicant has received or will receive during the period covered by the proposed HEAL loan. To determine the total financial resources available to the applicant for his or her costs of education for the period covered by the proposed HEAL loan (including familial, spousal, or personal income or other financial assistance that the applicant has received or will receive), the school must consider information provided through one of the national need analysis systems or any other procedure approved by the Secretary of Education, in addition to any other information which the school has regarding the student's financial situation. The school may make adjustments to the need analysis information only when necessary to accurately reflect the applicant's actual resources, and must maintain in the borrower's record documentation to support the basis for any adjustments to the need analysis information; and

(2) The costs reasonably necessary for each student to pursue the same or similar curriculum or program within the same class year at the school for the period covered by the proposed HEAL loan, using a standard student budget. The school must maintain in its general office records the criteria used to develop each standard student budget. Adjustments to the standard student budget may be made only to the extent that they are necessary for the student to complete his or her education, and documentation must be maintained in the borrower's record to support the basis for any adjustments to the standard student budget.

(g) Comply with the requirements of § 60.61.

(Approved by the Office of Management and Budget under control numbers 0915–0038 and 0915–0108)

[52 FR 751, Jan. 8, 1987, as amended at 57 FR 28799, June 29, 1992]

§ 60.52 The student's loan check.

(a) When a school receives from a HEAL lender a loan disbursement check or draft payable jointly to the school and to one of its students, it must:

(1) If the school receives the instrument after the student is enrolled, obtain the student's endorsement, retain that portion of funds due the school, and disburse the remaining funds to the student.

(2) If the school receives the instrument before the student is enrolled, it must, prior to endorsing the instrument, send the instrument to the student to endorse and return to the school. The school may then retain that portion of funds then due the school but must hold the remaining funds for disbursement to the student at the time of enrollment. However, if the student is unable to meet other educational expenses due before the time of enrollment, the school may obtain the student's endorsement and disburse to the student that portion of funds required to meet these other educational expenses.

(b) If a school determines that a student does not plan to enroll, the school must return a loan disbursement check or draft to the lender within 30 days of this determination.

[48 FR 38988, Aug. 26, 1983, as amended at 52 FR 751, Jan. 8, 1987]

§ 60.53 Notification to lender or holder of change in enrollment status.

Each school must notify the holder of a HEAL loan of any change in the student's enrollment status within 30 days following the change in status. Each notice must contain the student's full name under which the loan was received, the student's current name (if different), the student's Social Security number, the date of the change in the enrollment status, or failure to enroll as scheduled for any academic period as a full-time student, the student's latest known permanent and temporary addresses, and other information which the school may decide is necessary to identify or locate the student. If the school does not know the identity of the current holder of the HEAL loan, it must notify the HEAL Program Office of a change in the student's enrollment status. This notification is not required for vacation periods and leaves of absence or other temporary interruptions which do not exceed one academic term.

(Approved by the Office of Management and Budget under control number 0915–0108)

[52 FR 751, Jan. 8, 1987, as amended at 57 FR 28799, June 29, 1992]

§ 60.54 Payment of refunds by schools.

A participating school must pay that portion of a refund that is allocable to a HEAL loan directly to the original lender (or to a subsequent holder of the loan note, if the school has knowledge of the holder's identity). At the same time, the school must provide to the borrower written notice that it is doing so.

(Approved by the Office of Management and Budget under control number 0915–0108)

[48 FR 38988, Aug. 26, 1983, as amended at 57 FR 28799, June 26, 1992]

§ 60.55 Administrative and fiscal procedures.

Each school must establish and maintain administrative and fiscal procedures necessary to achieve the following objectives:

(a) Proper and efficient administration of the funds received from students who have HEAL loans;

(b) Protection of the rights of students under the HEAL program;

(c) Protection of the United States from unreasonable risk of loss due to defaults; and

(d) Compliance with applicable requirements for HEAL schools.

§ 60.56 Records.

(a) In addition to complying with the requirements of section 739(b) of the Act, each school must maintain an accurate, complete, and easily retrievable record with respect to each student who has a HEAL loan. The record must contain all of the following information:

(1) Student's name, address, academic standing and period of attendance;

(2) Name of the HEAL lender, amount of the loan, and the period for which the HEAL loan was intended;

(3) If a noncitizen, documentation of the student's alien registration status.

(4) Amount and source of other financial assistance received by the student during the period for which the HEAL loan was made;

(5) Date the school receives the HEAL check or draft and the date it either gives it to the student or returns it to the lender (if the school is not the lender);

(6) Date the school disburses the loan to a student (if the school is the lender);

(7) Date the school signs the loan check or draft (if the school is a copayee);

(8) Amount of tuition, fees and other charges paid by the student to the school for the academic period covered by the loan and the dates of payment;

(9) Photocopy of each HEAL check or draft received by the student;

(10) Documentation of each entrance interview, including the date of the entrance interview and the signature of the borrower indicating that the entrance interview was conducted;

(11) Documentation of the exit interview, including the date of the exit interview and the signature of the borrower indicating that the exit interview was conducted, or documentation of the date that the school mailed exit interview materials to the borrower if the borrower failed to report for the exit interview;

(12) A photocopy made by the school of the borrower's I–151 or I–551, if the borrower is required to possess such identification by the United States, or other documentation, if obtained by the school, to verify citizenship status and Social Security number (e.g., a certified copy of the borrower's birth certificate or a photocopy made by the school of the borrower's original Social Security card or copy issued by the Federal government);

(13) Documentation of the calculations made which compare the financial resources of the applicant with the cost of his or her education at the school;

(14) Copy(s) of the borrower's financial aid transcript(s);

(15) The standard budget used for the student, and documentation to support the basis for any deviations made to the standard budget;

(16) Copies of all correspondence between the school and the borrower or between the school and the lender or its assignee regarding the loan;

(17) Copy of each form used by the school in connection with the loan; and

(18) Expected postgraduate destination of borrower.

(b) The school must maintain the record for not less than 5 years following the date the student graduates, withdraws or fails to enroll as a full-time student. The school may store the records in microform or computer format.

(c) The school must comply with the Department's biennial audit requirements of section 705 of the Act.

(d) The school must develop and follow written procedures for the receipt, verification of amount, and disbursement of HEAL checks or drafts. These procedures must be maintained in the school's policies and procedures manuals or other general office records.

(Approved by the Office of Management and Budget under control number 0915–0108)

[48 FR 38988, Aug. 26, 1983, as amended at 52 FR 751, Jan. 8, 1987; 57 FR 28799, June 29, 1992]

§ 60.57 Reports.

A school must submit reports to the Secretary at the times and in the manner the Secretary may reasonably prescribe. The school must retain a copy of each report for not less than 5 years following the report's completion, unless otherwise directed by the Secretary. A school must also make available to a HEAL lender or holder, upon the lender's or holder's request, the name, address, postgraduate destination and other reasonable identifying information for each of the school's students who has a HEAL loan.

(Approved by the Office of Management and Budget under control number 0915–0108)

[57 FR 28799, June 29, 1992]

§ 60.58 Federal access to school records.

For the purposes of audit and examination, a HEAL school must provide the Secretary of Health and Human Services, the Comptroller General of the United States, and any of their authorized representatives access to the records that the school is required to keep and to any documents and records pertinent to the administration of the HEAL Program.

§ 60.59 Records and Federal access after a school is no longer a HEAL school.

In the event a school ceases to participate in the HEAL program, the school (or its successor, in the case of a school which undergoes a change in ownership) must retain all required HEAL records and provide the Secretary of Health and Human Services, the Comptroller General of the United States, and any of their authorized representatives access to them.

§ 60.60 Limitation, suspension, or termination of the eligibility of a HEAL school.

(a) The Secretary may limit, suspend, or terminate the eligibility under the HEAL program of an otherwise eligible school that violates or fails to comply with any provision of title VII, part A, subpart I of the Act as amended (42 U.S.C. 292–292p), these regulations, or agreements with the Secretary concerning the HEAL program. Prior to terminating a school's participation in the program, the Secretary will provide the school an opportunity for a hearing in accordance with the procedures under paragraph (b) of this section.

(b) The Secretary will provide any school subject to termination with a written notice, sent by certified mail, specifying his or her intention to terminate the school's participation in the program and stating that the school may request, within 30 days of the receipt of this notice, a formal hearing. If the school requests a hearing, it must, within 90 days of the receipt of the notice, submit material, factual issues in dispute to demonstrate that there is cause for a hearing. These issues must be both substantive and relevant. The hearing will be held in the Washington, DC metropolitan area. The Secretary will deny a hearing if:

(1) The request for a hearing is untimely (i.e., fails to meet the 30-day requirement);

(2) The school does not provide a statement of material, factual issues in dispute within the 90-day required period; or

(3) The statement of factual issues in dispute is frivolous or inconsequential.

In the event that the Secretary denies a hearing, the Secretary will send a written denial, by certified mail, to the school setting forth the reasons for denial. If a hearing is denied, or if as a result of the hearing, termination is still determined to be necessary, the school will be terminated from participation in the program. A school will be permitted to reapply for participation in the program when it demonstrates, and the Secretary agrees, that it is in compliance with all HEAL requirements.

(c) This section does not apply to a determination that a HEAL school fails to meet the statutory definition of an ''eligible school.''

(d) This section does not apply to administrative action by the Department of Health and Human Services based on any alleged violation of The Family Educational Rights and Privacy Act of

1974 (section 438 of the General Education Provisions Act, as amended), as governed by 34 CFR part 99.

(Approved by the Office of Management and Budget under control number 0915–0144)

[48 FR 38988, Aug. 26, 1983, as amended at 52 752, Jan. 8, 1987; 58 FR 67350, Dec. 21, 1993]

§ 60.61 Responsibilities of a HEAL school.

(a) A HEAL school is required to carry out the following activities for each HEAL applicant or borrower:

(1) Conduct and document an entrance interview with each student (individually or in groups) no later than prior to the loan recipient's first HEAL disbursement in each academic year that the loan recipient obtains a HEAL loan. The school must inform the loan recipient during the entrance interview of his or her rights and responsibilities under a HEAL loan, including the consequences for noncompliance with those responsibilities, and must gather personal information which would assist in locating the loan recipient should he or she depart from the school without receiving an exit interview. A school may meet this requirement through correspondence where the school determines that a face-to-face meeting is impracticable.

(2) Conduct and document an exit interview with each HEAL loan recipient (individually or in groups) within the final academic term of the loan recipient's enrollment prior to his or her anticipated graduation date or other departure date from the school. The school must inform the loan recipient in the exit interview of his or her rights and responsibilities under each HEAL loan, including the consequences for noncompliance with those responsibilities. The school must also collect personal information from the loan recipient which would assist the school or the lender or holder in skiptracing activities and to direct the loan recipient to contact the lender or holder concerning specific repayment terms and options. A copy of the documentation of the exit interview, including the personal information collected for skiptracing activities, and any other information required by the Secretary regarding the exit interview must be sent to the lender or holder of each HEAL loan within 30 days of the exit interview. If the loan recipient departs from the school prior to the anticipated date or does not receive an exit interview, the exit interview information must be mailed to the loan recipient by the school within 30 days of the school's knowledge of the departure or the anticipated departure date, whichever is earlier. The school must request that the loan recipient forward any required information (e.g., skiptracing information, request for deferment, etc.) to the lender or holder. The school must notify the lender or holder of the loan recipient's departure at the same time it mails the exit interview material to the loan recipient.

(3) Verify the accuracy and completeness of information provided by each student on the HEAL loan application, particularly in regard to the HEAL eligibility requirements, by comparing the information with previous loan applications or other records or information provided by the student to the school. Notify the potential lender of any discrepancies which were not resolved between the school and the student.

(4) Develop and implement procedures relating to check receipt and release which keep these functions separate from the application preparation and approval process and assure that the amount of the HEAL loan check(s) does(do) not exceed the approved total amount of the loan and the statutory maximums. Checks must not be cashed without the borrower's personal endorsement. Documentation of these procedures and their usage shall be maintained by the school.

(5) Maintain accurate and complete records on each HEAL borrower and related school activities required by the HEAL program. All HEAL records shall be properly safeguarded and protected from environmental threats and unauthorized intrusion for use and theft.

(6) Maintain documentation of the criteria used to develop the school's standard student budgets in the school's general records, readily available for audit purposes, and maintain in each HEAL borrower's record a copy of the standard budget which was actually used in the determination of the

maximum loan amount approvable for the student, as described in §60.51.

(7) Notify the lender or its assignee of any changes in the student's name, address, status, or other information pertinent to the HEAL loan not more than 30 days after receiving information indicating such a change.

(b) Any school which has information which indicates potential or actual commission of fraud or other offenses against the United States involving these loan funds must promptly provide this information to the appropriate Regional Office of Inspector General for Investigations.

(c) The school will be considered responsible and the Secretary may seek reimbursement from any school for the amount of a loan in default on which the Secretary has paid an insurance claim, if the Secretary finds that the school did not comply with the applicable HEAL statute and regulations, or its written agreement with the Secretary. The Secretary may excuse certain defects if the school satisfies the Secretary that the defect did not contribute to the default or prejudice the Secretary's attempt to collect the loan from the borrower.

(d) A school is authorized to withhold services from a HEAL borrower who is in default on a HEAL loan received while enrolled in that school, except in instances where the borrower has filed for bankruptcy. Such services may include, but are not limited to academic transcripts and alumni services. Defaulted HEAL borrowers who have filed for bankruptcy shall provide court documentation that verifies the filing for bankruptcy upon the request of the school. Schools will also supply this information to the Secretary upon request. All academic and financial aid transcripts that are released on a defaulted HEAL borrower must indicate on the transcript that the borrower is in default on a HEAL loan. It is the responsibility of the borrower to provide the school with documentation from the lender, holder, or Department when a default has been satisfactorily resolved, in order to obtain access to services that are being withheld, or to have the reference to default removed from the academic and financial aid transcripts.

(Approved by the Office of Management and Budget under control number 0915–0108)

[52 FR 752, Jan. 8, 1987, as amended at 57 FR 28799, June 29, 1992; 58 FR 67350, Dec. 21, 1993]

SUBCHAPTER E—FELLOWSHIPS, INTERNSHIPS, TRAINING

PART 61—FELLOWSHIPS

Subpart A—Regular Fellowships

Sec.
61.1 Definitions.
61.2 Applicability.
61.3 Purpose of regular fellowships.
61.4 Establishment and conditions.
61.5 Qualifications.
61.6 Method of application.
61.7 Review of applications; committees; awards.
61.8 Benefits: Stipends; dependency allowances; travel allowances; vacation.
61.9 Payments: Stipends; dependency allowances; travel allowances.
61.10 Benefits: Tuition and other expenses.
61.11 Payments: Tuition and other expenses.
61.12 Accountability.
61.13 Duration and continuation.
61.14 Separate consideration of information concerning moral character or loyalty.
61.15 Moral character or loyalty; reference to Special Review Committee; review and recommendation.
61.16 Termination of or refusal to continue award on grounds relating to moral character or loyalty; hearing.
61.17 Termination on grounds other than those relating to moral character or loyalty.
61.18 Publications.
61.19 Copyright and reproduction.
61.20 Inventions or discoveries.
61.21 Interest.
61.22 Nondiscrimination.

Subpart B—Service Fellowships

61.30 Definitions.
61.31 Applicability.
61.32 Purpose of service fellowships.
61.33 Establishment of service fellowships.
61.34 Qualifications.
61.35 Method of application.
61.36 Selection and appointment of service fellows.
61.37 Stipends, allowances, and benefits.
61.38 Duration of service fellowships.

Subpart A—Regular Fellowships

AUTHORITY: Sec. 215, 58 Stat. 690, as amended, sec. 8, 77 Stat. 400; 42 U.S.C. 216, 1857g; secs. 301, 402, 58 Stat. 691, as amended, 707, secs. 412, 422, 62 Stat. 464, 598, sec. 433, 64 Stat. 444, as amended, sec. 308, 74 Stat. 364, sec. 444, 76 Stat. 1073, sec. 3, 77 Stat. 394, secs. 394, 395, 79 Stat. 1062; 42 U.S.C. 241, 282, 287a, 288a, 289c, 242f, 289g, 1857b, 280b–4, 280b–5.

SOURCE: 31 FR 12096, Sept. 16, 1966, unless otherwise noted.

§ 61.1 Definitions.

As used in this part:

(a) *Continuation award* is an award made by the Surgeon General, within the period of support recommended by a fellowship committee, without necessity for further action by the committee.

(b) *Noncitizen national* means any person who, though not a citizen of the United States, owes permanent allegiance to the United States.

(c) *Regular fellowship* means an award to support activity not requiring performance of services for the Public Health Service.

(d) *Surgeon General* means the Surgeon General of the U.S. Public Health Service or his delegate.

(e) *Continental United States* does not include Hawaii or Alaska.

§ 61.2 Applicability.

The regulations in this subpart apply to the establishment, award, and operation of all regular fellowships awarded under the Public Health Service Act and the Clean Air Act.

§ 61.3 Purpose of regular fellowships.

Regular fellowships are provided to encourage and promote:

(a) Research and training for research relating to (1) the physical and mental diseases and impairments of man, (2) the organization, provision, and financing of health services, (3) the causes, prevention, and control of air pollution, and (4) medical library and related health sciences and communication of information.

(b) Special scientific projects for the compilation of existing, or writing of original, contributions relating to scientific, social, or cultural advancements in sciences related to health.

§ 61.4 Establishment and conditions.

All regular fellowships in the Public Health Service shall be established by the Surgeon General. In establishing a fellowship or series of fellowships, the Surgeon General shall prescribe in

writing the conditions (in addition to those provided in the regulations in this part) under which the fellowships are to be awarded and held.

§61.5 Qualifications.

In order to qualify for a regular fellowship, an applicant must:

(a) Meet the Public Health Service requirements of general suitability, including professional and personal fitness.

(b) Have been accepted by a public or other nonprofit institution for the purpose of the activity for which the fellowship is sought.

(c) Be free from any disease or disability that would interfere with the accomplishment of the fellowship purpose.

(d) If a citizen or noncitizen national of the United States, sign and file with the Surgeon General the following statement:

> I do solemnly swear (or affirm) that I bear true faith and allegiance to the United States of America and will support and defend the Constitution and laws of the United States against all its enemies, foreign and domestic.

(e) Comply with such other requirements as may be prescribed by the Surgeon General.

§61.6 Method of application.

Application for a regular fellowship shall be made on forms prescribed by the Surgeon General. In addition to the information supplied by the applicant in his application, such further information may be required as is necessary to determine his qualifications and fitness.

§61.7 Review of applications; committees; awards.

The Surgeon General shall appoint one or more fellowship committees to examine the qualifications of applicants for fellowships and the merits of their proposals for research, training, or special scientific projects. A fellowship committee shall submit to the Surgeon General its recommendations concerning appointments. Awards of regular fellowships shall be made in writing by the Surgeon General.

§61.8 Benefits: Stipends; dependency allowances; travel allowances; vacation.

Individuals awarded regular fellowships shall be entitled to such of the following benefits as are authorized for the particular series of fellowship:

(a) Stipend.

(b) Dependency allowances.

(c) When authorized in advance, separate allowances for travel. Such allowances may not exceed amounts prescribed by the Surgeon General for

(1) Travel to the place where the fellow is to be located during the fellowship term, and

(2) Travel to return the fellow at the end of the fellowship term to his home or other place he left to carry out the fellowship, provided that (unless otherwise prescribed by the Surgeon General) such return travel is to or from a place outside the continental United States.

No allowances will be granted for shipping personal effects or household goods and no allowances will be granted for transporting dependents, except as authorized by the Surgeon General for travel undertaken by dependents (spouse and/or dependent children only) to or from a place outside the continental United States where the fellow is to be located during the fellowship term and for return from such place or except as otherwise prescribed by the Surgeon General for a particular series of fellowships.

(d) Vacation. Stipends and allowances will not be increased, or be paid beyond the term of a fellowship, on account of vacation an individual might have been entitled to but did not take.

§61.9 Payments: Stipends; dependency allowances; travel allowances.

Payments for stipends, dependency allowances, and the travel allowances specified in §61.8 may be made directly to the fellow or to the sponsoring institution for payment to the fellow.

§61.10 Benefits: Tuition and other expenses.

The Surgeon General may authorize allowances for payment of expenses, in whole or in part, of tuition, fees, equipment, supplies, attendance at meetings required to carry out the purposes of

the fellowship, or other expenses of the activities of the fellow.

§ 61.11 Payments: Tuition and other expenses.

(a) *Tuition and fees.* Allowances for tuition and fees may be made to the fellow or sponsoring institution.

(b) *Other expenses; standard or maximum allowances.* Any allowances for equipment, supplies, attendance at meetings, and other expenses shall, except as may otherwise be prescribed herein or by the Surgeon General, be paid to the sponsoring institution. The Surgeon General may establish a standard allowance or a maximum allowance for payment to the sponsoring institution for such expenses.

(c) *Attendance at meetings—fellows sponsored by Federal agencies.* Allowances for expenses of attendance at meetings by fellows who are sponsored by Federal agencies may be paid directly to such fellows.

(d) *Installments.* Payments to sponsoring institutions and to fellows under this section or under §61.9 may be made in advance or by way of reimbursement and, except as may otherwise be prescribed by the Surgeon General, in monthly installments.

§ 61.12 Accountability.

Payments shall be subject to such requirements relating to accountability as may be specified by the Surgeon General.

§ 61.13 Duration and continuation.

An award period may be any period not in excess of 2 years. The Surgeon General may make one or more continuation awards for an additional period upon a finding of satisfactory progress toward accomplishment of the purposes of the initial fellowship award. Additional support may be provided on appropriate justification after expiration of the period of support involved in the previous award.

§ 61.14 Separate consideration of information concerning moral character or loyalty.

No information in the records or possession of the Public Health Service concerning the moral character or loyalty of a fellow will be made available to any fellowship committee involved in recommending appointments of fellows.

§ 61.15 Moral character or loyalty; reference to Special Review Committee; review and recommendation.

(a) *Moral character or loyalty; reference to Special Review Committee.* Whenever the Surgeon General has substantial evidence with respect to any fellow (1) that the statement filed pursuant to §61.5(d) was not made in good faith; or (2) that a fellow has (i) been convicted of a crime involving moral turpitude or (ii) engaged in conduct involving moral turpitude (unless in the case of either paragraph (a)(2) (i) or (ii) of this section, it is established that the fellow is, nevertheless, then a person of good moral character), the Surgeon General shall refer the pertinent records to a Special Review Committee established as prescribed in paragraph (b) of this section.

(b) *Special Review Committee; composition.* The Special Review Committee shall be composed of a representative of the Office of the Surgeon General designated by the Surgeon General as chairman but nonvoting member, the appropriate Associate Director or comparable official of the bureau involved, the Chief of the Division of Research Grants, the Director of the Institute or the Chief of the Division which awarded the fellowship in question, or their delegates, and two additional members appointed by the Surgeon General.

(c) *Information; supplementation.* The Committee may supplement the information referred to it by such correspondence, personal interviews, or other informal methods as necessary in order to make its recommendation as provided in paragraph (d) of this section.

(d) *Review and recommendation.* The Committee shall review the pertinent records, determine whether there is substantial reason to believe that the award should be terminated or not continued either on grounds relating to moral character or on the ground that the statement filed pursuant to §61.5(d) was not made in good faith, and make its recommendation to the Surgeon

General in writing, with reasons therefor, accordingly.

§61.16 Termination of or refusal to continue award on grounds relating to moral character or loyalty; hearing.

If, after review of the recommendation of the Special Review Committee, the Surgeon General believes that the award should be terminated or should not be continued, he shall notify the fellow and sponsoring institution in writing that unless a request for a hearing is made by the fellow within 20 days after the fellow's receipt of such notice, his fellowship will be terminated or his application for continuation of the award denied. A copy of the regulations under this subpart and a copy of part 10 of title 45, Code of Federal Regulations, shall be enclosed with the notice. The notice shall set forth, as specifically as security permits, the grounds for the questions pertaining to moral character or loyalty. Any such request for a hearing shall be promptly submitted by the Surgeon General to the Chairman of the Departmental Fellowship Review Panel for handling in accordance with such part 10.

§61.17 Termination on grounds other than those relating to moral character or loyalty.

The Surgeon General may terminate a fellowship upon receipt from the fellow of a written request for termination. The Surgeon General shall terminate any fellowship prior to the date it would otherwise expire if he determines that the fellow's performance is unsatisfactory or that the fellow or the sponsoring institution is unfit or unable to carry out the purpose of the fellowship. The fellow and the sponsoring institution shall be notified in writing of such termination.

§61.18 Publications.

Publication, distribution, and disposition of all manuscripts and other materials resulting from a fellowship awarded hereunder shall be subject to the conditions that all such materials shall bear appropriate acknowledgment of Public Health Service support, that fellows shall furnish copies of such publications or other materials as may be requested by the Surgeon General, and to such other conditions as the Surgeon General may prescribe.

§61.19 Copyright and reproduction.

Where the work accomplished under a fellowship award results in a book or other copyrightable material, the author is free to copyright the work, but the Public Health Service reserves a royalty-free, nonexclusive, and irrevocable license to reproduce, publish, or otherwise use, and to authorize others to use, all copyrightable or copyrighted material resulting from the fellowship award.

§61.20 Inventions or discoveries.

Any fellowship award made hereunder is subject to the regulations of the Department of Health and Human Services set forth in title 45 CFR parts 6 and 8, as amended. Such regulations shall apply to any activity for which fellowship funds are in fact used, whether within the scope of the fellowship as approved or otherwise. Appropriate measures shall be taken by the fellow, the sponsoring institution, and the Surgeon General to assure that no contracts, assignments, or other arrangements inconsistent with the fellowship obligation are entered into or continued and that all personnel involved in the supported activity are aware of and comply with such obligation. Laboratory notes, related technical data and information pertaining to inventions or discoveries shall be maintained for such periods, and filed with or otherwise made available to the Surgeon General or those whom he may designate at such times and in such manner as he may determine necessary to comply with such Department regulations.

§61.21 Interest.

Any interest earned through deposit or investment by the sponsoring institution of funds paid pursuant to the provisions of this subpart shall be paid to the United States as such interest is received by the sponsoring institution.

§61.22 Nondiscrimination.

Attention is called to the fact that funds paid to a sponsoring institution

pursuant to §61.11 in order to meet the expenses of the activities of a fellow are considered Federal financial assistance to such institution. The institution is thus subject in this respect to the prohibition against discrimination on the basis of race, color, or national origin imposed by title VI, Civil Rights Act of 1964, and the implementing Regulation of the Department of Health and Human Services (45 CFR part 80).

Subpart B—Service Fellowships

AUTHORITY: 42 U.S.C. 209, 210, 216.

SOURCE: 31 FR 12098, Sept. 16, 1966, unless otherwise noted.

§ 61.30 Definitions.

As used in this part:

Continental United States does not include Hawaii or Alaska.

Secretary means the Secretary of Health and Human Services and any other officer or employee of the Department of Health and Human Services to whom the authority involved may be delegated.

Service Fellowship is one which requires the performance of services, either full or part time, for the Public Health Service.

[63 FR 9950, Feb. 27, 1998]

§ 61.31 Applicability.

The regulations in this part apply to the establishment of service fellowships in the Public Health Service, the designation of persons to receive such fellowships, and the appointment of service fellows under authority of section 207(g) of the Public Health Service Act.

§ 61.32 Purpose of service fellowships.

Service fellowships in the Public Health Service are for the purpose of encouraging and promoting research, studies, and investigations related to health. Such fellowships may be provided to secure the services of talented scientists for a period of limited duration for health-related research, studies, and investigations where the nature of the work or the character of the individual's services render customary employing methods impracticable or less effective.

§ 61.33 Establishment of service fellowships.

All service fellowships shall be established by the Secretary. In establishing a service fellowship, or a series of service fellowships, the Secretary shall prescribe in writing the conditions (in addition to those provided in the regulations in this part) under which service fellows will be appointed and will hold their fellowships.

[63 FR 9950, Feb. 27, 1998]

§ 61.34 Qualifications.

Scholastic and other qualifications shall be prescribed by the Secretary for each service fellowship, or series of service fellowships. Each individual appointed to a service fellowship shall:

(a) Have presented satisfactory evidence of general suitability, including professional and personal fitness; and

(b) Possess any other qualifications as reasonably may be prescribed.

[63 FR 9950, Feb. 27, 1998]

§ 61.35 Method of application.

Application for a service fellowship shall be made in accordance with procedures established by the Secretary.

[63 FR 9950, Feb. 27, 1998]

§ 61.36 Selection and appointment of service fellows.

The Secretary shall:

(a) Prescribe a suitable professional and personal fitness review and an examination of the applicant's qualifications;

(b) Designate in writing persons to receive service fellowships; and

(c) Establish procedures for the appointment of service fellows.

[63 FR 9950, Feb. 27, 1998]

§ 61.37 Stipends, allowances, and benefits.

(a) *Stipends.* Service fellows shall be entitled to such stipend as is authorized by the Secretary for each service fellowship or series of service fellowships.

(b) *Travel and transportation allowances.* Under conditions prescribed by the Secretary, an individual appointed as a service fellow may be authorized

personal travel allowances or transportation and per diem, travel allowances or transportation for his or her immediate family, and transportation of household goods and personal effects, in conjunction with travel authorized by the Secretary.

(1) From place of residence, within or outside the continental United States, to first duty station,

(2) For any change of duty station ordered by the Service during the term of the fellowship, and

(3) From last duty station to the place of residence which he left to accept the fellowship, or to some other place at no greater cost to the Government.

(4) A service fellow shall be entitled to travel allowances or transportation and per diem while traveling on official business away from his or her permanent duty station during the term of the fellowship. Except as otherwise provided herein, a service fellow shall be entitled to travel and transportation allowances authorized in this part at the same rates as may be authorized by law and regulations for other civilian employees of the Public Health Service. If a service fellow dies during the term of a fellowship, and the place of residence that was left by the service fellow to accept the fellowship was outside the continental United States, the payment of expenses of preparing the remains for burial and transporting them to the place of residence for interment may be authorized. In the case of deceased service fellows whose place of residence was within the continental United States, payment of the expenses of preparing the remains and transporting them to the place of residence for interment may be authorized as provided for other civilian employees of the Public Health Service.

(c) *Benefits.* In addition to other benefits provided herein, service fellows shall be entitled to benefits as provided by law or regulation for other civilian employees of the Public Health Service.

(d) *Training.* Service fellows are eligible for training at Government expense on the same basis as other civilian employees.

[31 FR 12098, Sept. 16, 1966, as amended at 63 FR 9950, Feb. 27, 1998]

§ 61.38 Duration of service fellowships.

Initial appointments to service fellowships may be made for varying periods not in excess of 5 years. Such an appointment may be extended for varying periods not in excess of 5 years for each period in accordance with procedures and requirements established by the Secretary.

[63 FR 9951, Feb. 27, 1998]

PART 62—NATIONAL HEALTH SERVICE CORPS SCHOLARSHIP AND LOAN REPAYMENT PROGRAMS

Subpart A—National Health Service Corps Scholarship Program

Sec.

62.1 What is the scope and purpose of the National Health Service Corps scholarship program?
62.2 Definitions.
62.3 Who is eligible to apply for a scholarship program award?
62.4 To whom will scholarship program awards be available in addition to those individuals pursuing courses of study leading to degrees in medicine, osteopathy or dentistry?
62.5 How is application made for a scholarship program award?
62.6 How will individuals be selected to participate in the scholarship program?
62.7 What will an individual be awarded for participating in the scholarship program?
62.8 What does an individual have to do in return for the scholarship program award?
62.9 Under what circumstances can the period of obligated service be deferred to complete approved graduate training?
62.10 What will happen if an individual does not comply with the terms and conditions of participating in the scholarship program?
62.11 When can a scholarship program payment obligation be discharged in bankruptcy?
62.12 Under what circumstances can the service or payment obligation be canceled, waived or suspended?
62.13 What are the limitations on the receipt of concurrent benefits?
62.14 What are the special provisions relating to recipients of awards under the PH/NHSC scholarship training program who will also receive awards under the scholarship program?

Subpart B—National Health Service Corps Loan Repayment Program

62.21 What is the scope and purpose of the National Health Service Corps Loan Repayment Program?
62.22 Definitions.
62.23 How will individuals be selected to participate in the Loan Repayment Program?
62.24 Who is eligible to apply for the Loan Repayment Program?
62.25 What does the Loan Repayment Program provide?
62.26 What does an individual have to do in return for loan repayments received under the Loan Repayment Program?
62.27 What will happen if an individual does not comply with the terms and conditions of participation in the Loan Repayment Program?
62.28 Under what circumstances can the service or payment obligation be canceled, waived or suspended?
62.29 Under what circumstances can the Loan Repayment Program obligation be discharged in bankruptcy?
62.30 What other regulations and statutes apply?

Subpart C—Grants for State Loan Repayment Programs

62.51 What is the scope and purpose of the State Loan Repayment Program?
62.52 Definitions.
62.53 Who is eligible for this program?
62.54 What must applications for the State Loan Repayment Program contain?
62.55 What State Program Elements are required to ensure similarity with the NHSC Loan Repayment Program?
62.56 How are the Federal grant funds and State matching funds to be used under this program?
62.57 How will States be selected to participate in this program?
62.58 What other regulations apply?

Subpart D—Special Repayment Program

62.71 What is the scope and purpose of the Special Repayment Program?
62.72 Definitions.
62.73 What are the procedures for participation in the Special Repayment Program?
62.74 How much credit will a Program participant receive for monetary repayments made, or approved service performed, before beginning service under the Special Repayment Program?
62.75 Will individuals serving under the Special Repayment Program receive credit for partial service?
62.76 How will amounts of money due under the option under section 204(c)(1) of Public Law 100–177 be required to be repaid?

AUTHORITY: Sec. 215 of the Public Health Service Act, 58 Stat. 690, as amended, 63 Stat. 35 (42 U.S.C. 216); sec. 751 of the Public Health Service Act, 90 Stat. 2281 (42 U.S.C. 294t), unless otherwise noted.

SOURCE: 45 FR 55429, Aug. 20, 1980, unless otherwise noted.

Subpart A—National Health Service Corps Scholarship Program

§ 62.1 What is the scope and purpose of the National Health Service Corps scholarship program?

These regulations apply to the award of scholarships under the National Health Service Corps Scholarship Program authorized by section 751 of the Public Health Service Act (42 U.S.C. 294t) to students receiving academic training in medicine, osteopathy, dentistry, and other health professions. The purpose of this program is to assure an adequate supply of trained health professionals for the National Health Service Corps which is used by the Secretary to improve the delivery of health services in health manpower shortage areas.

§ 62.2 Definitions.

As used in this part:

Acceptable level of academic standing means the level at which a full-time student retains eligibility to continue in attendance in school under the school's standards and practices.

Act means the Public Health Service Act, as amended.

Approved graduate training means those programs of graduate training in medicine, osteopathy, dentistry or other health professions which (a) lead to eligibility for board certification or which provide other evidence of completion, and (b) have been approved by the appropriate health professions body as determined by the Secretary.

Full-time student means an individual pursuing a course of study leading to a degree in medicine, osteopathy, dentistry or an equivalent credential for a particular health profession who is enrolled for a sufficient number of credit hours in any academic term to complete the course of study within not more than the number of academic terms normally required at the school.

If an individual is enrolled in a school and is pursuing a course of study which is designed to be completed in more than 4 years, the individual will be considered a full-time student for only the last 4 years of the course of study.

Health manpower shortage area means the geographic area, the population group, the public or nonprofit private medical facility, or other public facility which has been determined by the Secretary to have a shortage of health manpower under section 332 of the Act and its implementing regulations (42 CFR part 5).

National of the United States means a citizen of the United States or a person who, though not a citizen of the United States, owes permanent allegiance to the United States.

Public Health and National Health Service Corps Scholarship Training Program, or *PH/NHSC Scholarship Training Program*, means the program authorized by section 225 of the Act as in effect on September 30, 1977, and repealed on October 1, 1977.

Scholarship Program means the National Health Service Corps Scholarship Program authorized by section 751 of the Act (42 U.S.C. 294t).

Scholarship Program participant or *participant* means an individual whose application to the Scholarship Program has been approved and whose contract has been accepted and signed by the Secretary.

School means a school of medicine, osteopathy, dentistry, or other health profession which (a) provides training leading to a degree of doctor of medicine, doctor of osteopathy, doctor of dentistry, or an equivalent credential for a particular health profession, and (b) which is accredited by a body or bodies recognized for accreditation purposes by the Secretary of Education.

School year means all or part of the 12-month period from July 1 through June 30 during which an applicant is enrolled in a school as a full-time student.

Service means the United States Public Health Service.

Secretary means the Secretary of Health and Human Services and any other officer or employee of the Department of Health and Human Services to whom the authority involved has been delegated.

State means one of the several States, the District of Columbia, the Commonwealth of Puerto Rico, the Northern Mariana Islands, the Virgin Islands, Guam, American Samoa, and the Trust Territory of the Pacific Islands.

§62.3 Who is eligible to apply for a scholarship program award?

(a) To be eligible for a scholarship under this part an applicant must:

(1) Be accepted for enrollment, or be enrolled, as a full-time student in a school located in a State;

(2) Be pursuing a course of study or program offered by the school leading to a degree in medicine, osteopathy, dentistry, or an equivalent credential for a particular health profession;

(3) Be eligible for, or hold, an appointment as a commissioned officer in the Regular or Reserve Corps of the Service or be eligible for selection for civilian service in the National Health Service Corps;

(4) Be a National of the United States; and

(5) Submit an application to participate in the Scholarship Program together with a signed contract as described in section 751(f) of the Act.

(b) Any applicant who owes an obligation for professional practice to a State or other entity under an agreement entered into before filing an application under this part is ineligible for an award unless a written statement satisfactory to the Secretary is submitted from the State or entity that (1) there is no potential conflict in fulfilling the service obligation to the State or entity and the Scholarship Program, and that (2) the Scholarship Program service obligation will be served before the service obligation for professional practice owed to the State or entity.

(c) Any individual who receives a scholarship under the Indian Health Service Scholarship Program (section 757 of the Act) or the Scholarship Program for First-Year Students of Exceptional Financial Need (section 758 of the Act) is ineligible to participate in the Scholarship Program during the

School year(s) for which the scholarships under sections 757 or 758 of the Act were awarded.

§ 62.4 To whom will scholarship program awards be available in addition to those individuals pursuing courses of study leading to degrees in medicine, osteopathy, or dentistry?

The Secretary will, from time-to-time, publish in the FEDERAL REGISTER a list of those health professions in addition to medicine, osteopathy, and dentistry for which the National Health Service Corps has need and for which support is available. The Secretary will also publish any other eligibility criteria, in addition to those in § 62.3, that may be required to assure that participants can be utilized during their periods of obligated service in a manner that will best meet the needs of the National Health Service Corps.

§ 62.5 How is application made for a scholarship program award?

Each individual desiring a scholarship under this part must submit an application (including a signed contract as required under section 751(f) of the Act) in the form and at the time prescribed by the Secretary.

§ 62.6 How will individuals be selected to participate in the scholarship program?

(a) *General.* In deciding which applications for participation in the Scholarship Program will be approved, the Secretary will place the applications into categories based upon the selection priorities described in paragraph (b) of this section. Except for continuation awards (see paragraph (e) of this section) the Secretary will then evaluate each applicant under paragraph (c) of this section.

(b) *Priorities.* (1) First priority will be given to individuals who have previously received a scholarship under the PH/NHSC Scholarship Training Program, a scholarship under this Scholarship Program, or a scholarship under section 758 of the Act, authorizing scholarships for first-year students of exceptional financial need. (2) Second priority will be given to applicants who are entering their first year of study.

(c) *Selection.* (1) In selecting participants, the Secretary will take into consideration those factors which he or she determines necessary to assure effective participation in the Scholarship Program. These factors may include, but not be limited to (i) work experience, (ii) community background, (iii) career goals, (iv) faculty recommendation, and (v) academic performance.

(2) Special consideration will be given to (i) medical and osteopathic students who indicate their intention to enter family practice, internal medicine, pediatrics, or osteopathic general practice residencies, (ii) dental students who indicate their intention to undertake general practice training following graduation or who plan no postgraduate training, and (iii) those individuals who indicate an intent to pursue other types of clinical practice or specialized training for which the National Health Service Corps has a particular need.

(d) *Duration of Scholarship award.* Subject to the availability of funds for the Scholarship Program, the Secretary will award a participant a scholarship under this part for a period of 1 school year.

(e) *Continuation awards.* Subject to the availability of funds for the Scholarship Program, the Secretary will award a continuation scholarship if (1) the participant requests a continuation, (2) the award will not extend the total period of Scholarship Program support beyond 4 years, and (3) the participant is eligible for continued participation in the Scholarship Program.

§ 62.7 What will an individual be awarded for participating in the scholarship program?

(a) *Amount of scholarship.* (1) A scholarship award for each school year will consist of (i) tuition, (ii) reasonable educational expenses, including required fees, books, supplies, and required educational equipment, and (iii) a monthly stipend for the 12-month period beginning with the first month of each school year in which the individual is a participant. For purposes of this section ''required fees'' means those fees which are charged by the

school to all students pursuing a similar curriculum and ''required educational equipment'' means educational equipment which must be rented or purchased by all students pursuing a similar curriculum at that school.

(2) The Secretary may enter into a contract with the school in which the participant is enrolled for the direct payment of tuition and reasonable educational expenses in the participant's behalf.

(b) *Payment of scholarship: Leave-of-absence; repeated course work.* The Secretary will suspend scholarship payments to or on behalf of a participant if the school (1) approves a leave-of-absence for the participant for health, personal, or other reasons, or (2) requires the participant to repeat course work for which the Secretary has previously made scholarship payments under §62.7. However, if the repeated course work does not delay the participant's graduation date, scholarship payments will continue except for any additional costs relating to the repeated course work. Any scholarship payments suspended under this paragraph will be resumed by the Secretary upon notification by the school that the participant has returned from the leave-of-absence or has completed the repeated course work and is pursuing as a full-time student the course of study for which the scholarship was awarded.

§62.8 What does an individual have to do in return for the scholarship program award?

(a) *General.* Except as provided in paragraphs (d), (f), and (g) of this section, each participant is obligated to (1) become a member of the National Health Service Corps employed as a Commissioned Officer in the Regular or Reserve Corps of the Service or as a Federal civilian in the full-time clinical practice of the participant's profession and (2) serve in the health manpower shortage area to which the participant is assigned by the National Health Service Corps.

(b) *Beginning of service.* (1) The period of obligated service will begin when the Scholarship Program participant begins to provide services in the health manpower shortage area to which he or she is assigned by the Secretary. Except for those participants who receive a deferral under §62.9 (a) or (b), this assignment will be made by the Secretary as soon as possible following: (i) the completion of the participant's course of study leading to a degree in medicine, osteopathy, dentistry, or an equivalent credential for a particular health profession, and (ii) appointment of the participant as a Commissioned Officer in the Regular or Reserve Corps of the Service or as a civilian member of the National Health Service Corps.

(2) For purposes of this paragraph, ''appointment'' means only those appointments as Commissioned Officers in the Regular or Reserve Corps of the Service or as civilian members of the National Health Service Corps made specifically for the purpose of serving a participant's period of obligated service.

(c) *Duration of service.* Except as provided in §62.14(b)(1), the period for which the Scholarship Program participant is obligated to serve is equal to 1 year for each school year for which the participant receives a scholarship award under this part, or 2 years, whichever is greater.

(d) *Service by detail.* If the Secretary determines that there is no need in a health manpower shortage area for a member of the profession in which the Scholarship Program participant is obligated to provide service, the Scholarship Program participant may be detailed to serve the period of obligated service as a full-time member of the profession for which the participant has been trained, in any unit of the Department of Health and Human Services as the Secretary may determine.

(e) *Creditability of approved graduate training.* Except as provided in §62.14(b)(2), no period of approved graduate training will be credited toward satisfying the period of obligated service incurred under the Scholarship Program.

(f) *Service under the National Research Service Award Program.* (1) A Scholarship Program participant who demonstrates exceptional promise for medical research may perform the period of obligated service owed under this section by participating in the National

Research Service Award Program for individual postdoctoral fellows authorized under section 472 of the Act.

(2) Exceptional promise for medical research will be demonstrated if the participant applies for a National Research Service Award for individual postdoctoral fellows, is selected to participate in this research program, and accepts the offer of participation. A Scholarship Program participant in the National Research Service Award Program will receive credit toward satisfying the period of obligated service incurred under this section for any period of time he or she is engaged in activities which meet the service requirements of the National Research Service Award Program.

(3) If the time served under the National Research Service Award Program is less than the total period of obligated service owed under the Scholarship Program, the participant will serve the remainder of the Scholarship Program service obligation (i) in activities which meet the criteria for service under the National Research Service Award Program, as approved by the Secretary or (ii) as a member of the National Health Service Corps providing health services in the full-time clinical practice of his or her health profession. A participant who fails to begin or complete the service requirements under the National Research Service Award Program may be subject to the default penalty under § 62.10(c) of this part and the default penalties under the National Research Service Award Program.

(g) *Release from service obligation to engage in private practice.* The Secretary will release a participant from all or part of the service obligation if the participant applies for a release under section 753 of the Act and agrees in writing to engage for a period equal to the remaining period of the participant's service obligation in the full-time private clinical practice of the participant's health profession, under the requirements of section 753 of the Act.

§ 62.9 Under what circumstances can the period of obligated service be deferred to complete approved graduate training?

(a) *Requested deferment.* Upon the request of any participant receiving a degree from a school of medicine, osteopathy, or dentistry, veterinary medicine, optometry, podiatry or pharmacy, the Secretary will defer the beginning date of the obligated service to allow the participant to complete an approved graduate training program. The period of this deferment may not exceed (1) three years for any participant receiving a degree from a school of medicine, osteopathy or dentistry, or (2) one year for any participant recieving a degree from a school of veterinary medicine, optometry, podiatry or pharmacy. The Secretary may, however, extend this period of deferment if the Secretary determines that the extension is consistent with the needs of the National Health Service Corps.

(b) *Required deferment.* Each participant receiving a degree in medicine or osteopathy who does not intend to enter training which can be completed within the deferment period granted under paragraph (a) of this section must complete at least one year of approved graduate training before beginning the period of obligated service. This one year of training must be in (1) an allopathic flexible first-year program whose sponsorship includes approved residencies in family practice, internal medicine, pediatrics, or a categorical first-year program in family practice, internal medicine, or pediatrics; (2) a rotating internship in osteopathic medicine; or (3) such other programs as the Secretary determines provides comparable experience. Any participant receiving a degree in medicine or osteopathy who fails to complete the one year of required training or an approved graduate training program for which a deferment was granted under paragraph (a) of this section will be subject to the default penalties of § 62.10(c).

(c) *Altering deferment.* Before altering the length or type of approved graduate training for which the period of obligated service was deferred under

paragraphs (a) or (b) of this section, the participant must request and obtain the Secretary's approval of the alteration.

(d) *Additional terms of deferment.* The Secretary may prescribe additional terms and conditions for deferment under paragraphs (a), (b), and (c) of this section as necessary to carry out the purposes of the Scholarship Program.

(e) *Beginning of service after deferment.* Any participant whose period of obligated service has been deferred under paragraphs (a) or (b) of this section must begin the obligated service when the participant begins to provide health services in the health manpower shortage area to which he or she is assigned by the Secretary. This assignment will be made by the Secretary as soon as possible following (1) the completion of the requested or required graduate training for which the deferment was granted, and (2) appointment as a Commissioned Officer in the Regular or Reserve Corps of the Service or as a civilian member of the National Health Service Corps.

§62.10 What will happen if an individual does not comply with the terms and conditions of participating in the scholarship program?

(a) If a participant, other than one described in paragraph (b) of this section, fails to accept payment or instructs the school not to accept payment of the scholarship provided by the Secretary, the participant must, in addition to any service or other obligation incurred under the contract, pay to the United States the amount of $1,500 liquidated damages. Payment of this amount must be made within 30 days of the date on which the participant fails to accept payment of the scholarship award or instructs the school not to accept payment.

(b) When a participant fails to maintain an acceptable level of academic standing, is dismissed from the school for disciplinary reasons, or voluntarily terminates the course of study or program for which the scholarship was awarded before completing the course of study or program, the participant must, instead of performing any service obligation, pay to the United States an amount equal to all scholarship funds awarded under §62.7. Payment of this amount must be made within 3 years of the date the participant becomes liable to make payment under this paragraph.

(c) If a participant fails to begin or complete the period of obligated service incurred under §62.8, including failing to comply with the applicable terms and conditions of a deferment granted by the Secretary, the participant must pay to the United States an amount determined by the formula set forth in section 754(c) of the Act. Payment of this amount shall be made within 1 year of the date that the participant failed to begin or complete the period of obligated service, as determined by the Secretary.

§62.11 When can a scholarship program payment obligation be discharged in bankruptcy?

In accordance with section 754(d)(3) of the Act, any payment obligation incurred under §62.10 may not be discharged in bankruptcy under title XI of the United States Code until 5 years after the date on which the payment obligation is due.

§62.12 Under what circumstances can the service or payment obligation be canceled, waived or suspended?

(a) Any obligation of a participant for service or payment will be canceled upon the death of the participant.

(b)(1) A participation may seek a waiver or suspension of the service or payment obligations incurred under this part by written request to the Secretary setting forth the bases, circumstances, and causes which support the requested action. The Secretary may approve a request for a suspension for a period of 1 year. A renewal of this suspension may also be granted.

(2) The Secretary may waive or suspend any service or payment obligation incurred by a participant whenever compliance by the participant (i) is impossible, or (ii) would involve extreme hardship to the participant and if enforcement of the service or payment obligation would be against equity and good conscience.

(c) Compliance by a participant with a service or payment obligation will be considered impossible if the Secretary

determines, on the basis of information and documentation as may be required, that the participant suffers from a physical or mental disability resulting in the permanent inability of the participant to perform the service or other activities which would be necessary to comply with the obligation.

(d) In determining whether to waive or suspend any or all of the service or payment obligations of a participant as imposing an undue hardship and being against equity and good conscience, the Secretary, on the basis of information and documentation as may be required, will consider:

(1) The participant's present financial resources and obligations;

(2) The participant's estimated future financial resources and obligations; and

(3) The extent to which the participant has problems of a personal nature, such as physical or mental disability, terminal illness in the immediate family which so intrude on the participant's present and future ability to perform as to raise a presumption that the individual will be unable to perform the obligation incurred.

§ 62.13 What are the limitations on the receipt of concurrent benefits?

Under section 741(f) or 836(h) of the Act, the Secretary may agree to repay a portion of an individual's educational loans in return for the individual's agreement to practice his or her profession in an area in need of health manpower. However, a Scholarship Program participant may not enter into an agreement with the Secretary under section 741(f) or 836(h) of the Act, until either:

(a) The participant has completed the service obligation under the Scholarship Program,

(b) The Secretary has recovered from the participant an amount determined under § 62.10, or

(c) Any service or payment obligation has been waived under § 62.12.

In no case shall a scholarship received under these regulations be considered an educational loan for the purposes of section 741(f) or 836(h) of the Act.

§ 62.14 What are the special provisions relating to recipients of awards under the PH/NHSC scholarship training program who will also receive awards under the scholarship program?

(a) Except as provided in paragraph (b) of this section, if a participant has previously received an award under the PH/NHSC Scholarship Training Program and also receives an award under the Scholarship Program, the terms and conditions of these regulations will apply to the participant's entire obligation incurred under both the PH/NHSC Scholarship Training Program and the Scholarship Program.

(b) If a participant has received an award under the PH/NHSC Scholarship Training Program and also receives an award under the Scholarship Program, the following conditions apply:

(1) *Period of obligated service—carry over.* The period of obligated service owed by the participant is equal to the total number of school years for which scholarship support was awarded under both the PH/NHSC Scholarship Training Program and the Scholarship Program without regard to either Program's minimum support requirement under 42 CFR 62.7(a) (1976) as adopted on May 22, 1974 (see 39 FR 17962), and under § 62.8(c) of this part.

(2) *Credit for internship and residency training.* (i) If a participant received a scholarship under the PH/NHSC Scholarship Training Program for any school year beginning before October 12, 1976, the participant will receive credit toward satisfying the periods of obligated service incurred under the PH/NHSC Scholarship Training Program and under § 62.8 of this part for any periods of internship or residency training served in a Service or National Health Service Corps facility.

(ii) If a participant received a scholarship for the first time during the 1977–78 school year under the PH/NHSC Scholarship Training Program, the participant will only receive 1 year of credit toward satisfying the period of obligated service incurred under the PH/NHSC Scholarship Training Program for internship or residency training served in a Service or National Health Service Corps facility.

(3) *Default penalties.* The PH/NHSC Scholarship Training Program default penalty will apply to a participant who fails to begin or complete the active duty service obligation incurred under that Program, and the § 62.10 default penalties will apply to a participant who fails to begin or complete the service obligation incurred under § 62.8 of these regulations. In determining which default penalty to apply when an individual who has received a Scholarship award under both the PH/NHSC Scholarship Training Program and the Scholarship Program fails to begin or complete his service obligation, the service obligations will be considered to have been served in the order in which they were incurred.

Subpart B—National Health Service Corps Loan Repayment Program

AUTHORITY: Sec. 215 of the Public Health Service Act, 58 Stat. 690, as amended, 63 Stat. 35 (42 U.S.C. 216); sec. 338B of the Public Health Service Act, 101 Stat. 992 (42 U.S.C. 2541–1).

SOURCE: 54 FR 13462, Apr. 3, 1989, unless otherwise noted.

§ 62.21 What is the scope and purpose of the National Health Service Corps Loan Repayment Program?

The regulations of this subpart apply to the award of health professions educational loan payments under the National Health Service Corps Loan Repayment Program authorized by section 338B of the Public Health Service Act (42 U.S.C. 2541–1). The purpose of the Program is to assure an adequate supply of trained health professionals for the National Health Service Corps. These professionals will be assigned by the Secretary to provide necessary health services to persons living in designated health manpower shortage areas.

§ 62.22 Definitions.

The definitions in § 62.2 of this part will apply for the purpose of this subpart, except for the definition of *approved graduate training.* The following definitions will also apply for purposes of this subpart:

Approved graduate training means a program of graduate training in allopathic or osteopathic medicine, dentistry or other health profession which (a) leads to eligibility for board certification or which provides other evidence of completion, (b) has been approved by the appropriate health professions body as determined by the Secretary and (c) is in the specialty or type of training specified by the Program participant in the Loan Repayment Program Contract or, at the Program participant's request and at the Secretary's option, is in a specialty or area of training determined by the Secretary to be consistent with the needs of the National Health Service Corps.

Commercial loans means loans made by banks, credit unions, savings and loan associations, insurance companies, schools, and other financial or credit institutions which are subject to examination and supervision in their capacity as lenders by an agency of the United States or of the State in which the lender has its principal place of business.

Educational expenses means the costs of the health professions education, exclusive of the tuition, such as fees, books, supplies, and educational equipment and materials.

Government loans means loans which are made by Federal, State, county or city agencies which are authorized by law to make such loans.

Living expenses means the costs of room and board, transportation and commuting costs and other costs incurred during an individual's attendance at a health professions school.

Loan Repayment Program means the National Health Service Corps Loan Repayment Program authorized by section 338B of the Act (42 U.S.C. 2541–1).

Loan Repayment Program Contract means the agreement, which is signed by an applicant and the Secretary, for the Loan Repayment Program wherein the applicant agrees to accept repayment of health professions educational loans and to serve in accordance with the provisions of section 338B of the Act and this subpart for a prescribed period of obligated service.

Medically underserved area means *health manpower shortage area* as defined in § 62.2.

Program participant means an individual whose application to the Loan Repayment Program has been approved and whose contract has been accepted and signed by the Secretary.

Qualifying loans means government and commercial loans for actual costs paid for tuition, reasonable educational expenses, and reasonable living expenses relating to the obtainment of a degree in allopathic or osteopathic medicine, dentistry, or other health profession. Such loans must have documentation which is contemporaneous with the training received in a health professions school. If health professions educational loans are refinanced, the original documentation of the loan(s) will be required to be submitted to the Secretary to establish the contemporaneous nature of such loans.

Reasonable educational and living expenses means those educational and living expenses which are equal to or less than the sum of the school's estimated standard student budgets for educational and living expenses for the degree program and for the year(s) during which the Program participant is/was enrolled in the school. However, if the school attended by the Program participant does/did not have a standard student budget or if a Program participant requests repayment for educational and living expenses which are in excess of the standard student budgets described in the preceding sentence, the Program participant must submit documentation, as required by the Secretary, to substantiate the reasonableness of all educational and living expenses incurred by the Program participant. To the extent that the Secretary determines, upon review of the Program participant's documentation, that all or a portion of the educational and living expenses are reasonable, these expenses will qualify for repayment.

§ 62.23 How will individuals be selected to participate in the Loan Repayment Program?

(a) In determining which applications from eligible individuals for participation in the Loan Repayment Program will be accepted for consideration, the Secretary will apply the following criteria:

(1) The extent to which an individual's training is in a health profession or specialty determined by the Secretary to be needed by the National Health Service Corps;

(2) The individual's commitment to serve in medically underserved areas;

(3) The availability of the individual for service, with highest consideration being given to individuals who will be available for service at the earliest dates;

(4) The length of the individual's proposed service obligation, with greatest consideration being given to persons who agree to serve for longer periods of time; and

(5) The individual's academic standing, prior professional experience in a health manpower shortage area, board certification, residency achievements, peer recommendations, depth of past residency practice experience and other criteria related to professional competence or conduct.

(b) Among qualified applicants, the Secretary will give priority to applications from individuals whose health professions or specialties are most needed by the NHSC and who are, in the Secretary's judgement, most committed to practice in medically underserved areas.

(c) By notice published in the FEDERAL REGISTER from time to time, the Secretary will specify the professions and specialties most needed by the National Health Service Corps.

§ 62.24 Who is eligible to apply for the Loan Repayment Program?

(a) To be eligible to participate in the Loan Repayment Program an individual must:

(1)(i) Be enrolled as a full-time student in the final year of a course of study or program approved by the Secretary which leads to a degree in allopathic or osteopathic medicine, dentistry or other health profession and which is offered by an accredited school in a State or

(ii) Be enrolled in an approved graduate training program in allopathic or osteopathic medicine or dentistry or other health profession in a State, or

(iii) Have a degree in allopathic or osteopathic medicine or dentistry or

other health profession and have completed an approved graduate training program in a State (or received a waiver of the completion requirement under § 62.26(d) of this subpart) and have a current and valid license to practice such health profession in a State;

(2) Be eligible for, or hold, an appointment as a commissioned officer in the Regular or Reserve Corps of the Public Health Service or be eligible for selection for civilian service in the National Health Service Corps;

(3) Submit an application to participate in the Loan Repayment Program; and

(4) Sign and submit to the Secretary, at the time of the submission of such application, a written contract agreeing to accept repayment of health professions educational loans and to serve (in accordance with this subpart) for the applicable period of obligated service in a health manpower shortage area as determined by the Secretary.

(b) Any individual who owes an obligation for health professional service to the Federal Government or a State or other entity under an agreement with such Federal, State or other entity is ineligible for the Loan Repayment Program unless such obligation will be completely satisfied prior to the beginning of service under this Program.

(c) Individuals in breach of a written contract entered into under section 338A of the Act and liable to the United States under section 338E(b) of the Act, in breach of a written contract entered into under section 225 of the Act (as in effect on September 30, 1977) and liable to the United States under section 225(f)(1) of the Act (as in effect on September 30, 1977) or in breach of any other obligation for health professional service to a Federal, State or local government entity are not eligible for participation in the Loan Repayment Program.

(Approved by the Office of Management and Budget under control number 0915–0127)

§ 62.25 What does the Loan Repayment Program provide?

(a) *Loan repayment.* For each year of service the individual agrees to serve, with a minimum of 2 years of obligated service, the Secretary may pay:

(1) Except as provided in paragraph (a)(2) of this section, up to $20,000 per year of a Program participant's qualifying loans or

(2) Up to $25,000 per year for a Program participant's qualifying loans if the Program participant agrees to provide obligated service in the Indian Health Service or a health facility or program operated by a tribe or tribal organization under the Indian Self-Determination Act.

The Secretary may establish different levels of annual loan repayment to encourage Program participants to serve in a manner which is in the best interest of the Loan Repayment Program. No loan repayments will be made for any professional practice performed prior to the effective date of the Loan Repayment Program Contract. Once a loan repayment contract has been signed by both parties, the Secretary will obligate such funds as will be necessary to ensure that sufficient funds will be available to make loan repayments for the duration of the period of obligated service.

(b) *Site visit.* The Secretary may reimburse an individual for the actual and reasonable travel expenses associated with one trip from the individual's residence to a site for the purpose of evaluating such site for service under the the Loan Repayment Program.

(c) *Tax liability payments.* The Secretary may, upon a Program participant's written request, make payments in a reasonable amount, as determined by the Secretary, to reimburse the Program participant for all or part of the increased Federal, State and local tax liability resulting from loan repayments received under the Loan Repayment Program. To maximize the Federal resources available for placing participants in HMSAs, supplementary payments for increased tax liability will only be made under unusual circumstances, and in no cases will these tax liability payments exceed 20% of the annual amounts of the loans being repaid. Program participants wishing to receive tax liability payments must submit their requests for such payments in a manner prescribed by the Secretary and must provide the Secretary with any documentation the Secretary determines is necessary to

establish a Program participant's increased tax liability. The Secretary will determine, based on the availability of funds and such other factors as the Secretary determines, the amounts of any such payments that may be made.

(Information collection requirements contained in paragraph (c) were approved by the Office of Management and Budget under control number 0915–0131)

[54 FR 13462, Apr. 3, 1989, as amended at 57 FR 56996, Dec. 2, 1992]

§ 62.26 What does an individual have to do in return for loan repayments received under the Loan Repayment Program?

(a) A Program participant whose eligibility for the Loan Repayment Program is based on § 62.24(a)(1)(i) of this subpart must maintain full-time enrollment, at an acceptable level of academic standing, in that course of study until its completion. Upon completion of that course of study, a Program participant who received a degree in allopathic or osteopathic medicine must enter approved graduate training and a Program participant who received a degree in a health profession other than allopathic or osteopathic medicine may enter approved graduate training. Once a Program participant enters approved graduate training, he or she must also meet the requirements set forth in paragraphs (b) (1), (2), (3), and (4) of this section. If a Program participant who received a degree in a health profession other than allopathic or osteopathic medicine does not enter approved graduate training; service, in accordance with paragraph (e) of this section, must commence as soon as possible upon the Program participant's completion of the course of study leading to his or her health professions degree.

(b) A Program participant whose eligibility for the Loan Repayment Program is based on § 62.24(a)(1)(ii) of this subpart must: (1) Continue in his or her approved graduate training program at an acceptable level of academic standing; (2) provide the Secretary with annual documentation of continued participation in that approved graduate training program at an acceptable level of academic standing; (3) successfully complete that approved graduate training program; and (4) commence service, in accordance with paragraph (e) of this section, as soon as possible upon completion of approved graduate training.

(c) A Program participant whose eligibility for the Loan Repayment Program is based on § 62.24(a)(1)(iii) of this subpart must commence service, in accordance with paragraph (e) of this section, as soon as possible after the effective date of the Loan Repayment Program Contract.

(d) If a Program participant fails to complete approved graduate training, the Secretary may, on his or her own initiative or at the Program participant's request, waive, for good cause, the completion requirement. Good cause will be deemed to exist if the Secretary determines that the Program participant has sufficient health professions training to be utilized by and make a substantial contribution to the National Health Service Corps. If waiver of the completion requirement in paragraph (b) of this section is granted; service, in accordance with paragraph (e) of this section, must commence as soon as possible after the granting of the waiver.

(e) Except for Program participants who fail to complete their course of study leading to a health professions degree or who fail to complete approved graduate training and do not receive a waiver pursuant to paragraph (d) of this section, each program participant must:

(1) Serve in a health manpower shortage area to which he or she is assigned by the Secretary as a member of the National Health Service Corps or serve pursuant to section 338D of the Act in a health manpower shortage area selected by the Secretary and

(2) Accept employment in a full-time clinical practice of the Program participant's profession, as

(i) A commissioned officer in the Regular or Reserve Corps of the Public Health Service,

(ii) A civilian member of the National Health Service Corps who is an employee of the United States,

(iii) A member of the National Health Service Corps who is not an employee of the United States, or

(iv) A private practitioner who is providing obligated service under the provisions of section 338D of the Act.

(f) The minimum length of obligated service is two years, or such longer period as the Program participant may agree to. The maximum length of obligated service is four years. If a Program participant agrees to an original contract of two or three years, such contract may be extended, subject to the availability of appropriated funding, for one year or two years (up to the four-year maximum). A one-year extension will not reactivate the statutory minimum requirement of two years of service.

(Information collection requirements contained in paragraph (b)(2) were approved by the Office of Management and Budget under control number 0915–0131)

§62.27 What will happen if an individual does not comply with the terms and conditions of participation in the Loan Repayment Program?

Program participants who default on their Loan Repayment Program Contracts will be subject to the applicable monetary payment provisions set forth at section 338E of the Act. Payment of any amount owed under section 338E of the Act shall be made within one year of the date the participant breached his or her Loan Repayment Contract, as determined by the Secretary.

§62.28 Under what circumstances can the service or payment obligation be canceled, waived or suspended?

A service or payment obligation under the Loan Repayment Program will be canceled or may be waived or suspended as provided in §62.12 of this part of the regulations.

§62.29 Under what circumstances can the Loan Repayment Program obligation be discharged in bankruptcy?

Any payment obligation incurred under §62.27 of this subpart may be released by a discharge in bankruptcy under title 11 of the United States Code only if such discharge is granted after the expiration of the five-year period beginning on the first date that payment was required, and only if the bankruptcy court finds that nondischarge of the obligation would be unconscionable.

§62.30 What other regulations and statutes apply?

Other regulations and statutes which apply to this subpart include but are not limited to:

Debt Collection Act of 1982, Pub. L. 97–365 (5 U.S.C. 5514) including Section 4, Requirement that Applicant Furnish Taxpayer Identifying Number;

Fair Credit Reporting Act (15 U.S.C. 1681 *et seq.*);

Privacy Act of 1974 (5 U.S.C. 552a);

Section 215(a) of the Public Health Service Act, as amended (42 U.S.C. 216(a)), for PHS commissioned officers, and 5 U.S.C. 3301 for civil service employees both of which authorize verification of an individual's suitability for employment;

Privacy Act of 1974; Alteration of System of Records, 52 FR 21622–21627, June 8, 1987, regarding the collection, maintenance and allowable use of personal information requested from program applicants.

Subpart C—Grants for State Loan Repayment Programs

AUTHORITY: Sec. 215 of the Public Health Service Act, 58 Stat. 690 as amended, 63 Stat. 35 (42 U.S.C. 216); sec. 338H of the Public Health Service Act, 101 Stat. 999 (42 U.S.C. 254q–1).

SOURCE: 54 FR 13464, Apr. 3, 1989, unless otherwise noted.

§62.51 What is the scope and purpose of the State Loan Repayment Program?

The regulations of this subpart apply to the award of grants authorized by section 338H of the Public Health Service Act (42 U.S.C. 254q–1) to support the establishment of State programs similar to the National Health Service Corps Loan Repayment Program authorized by section 338B of the Public Health Service Act (42 U.S.C. 2541–1). The purpose of this program is to improve the delivery of health services in medically underserved areas.

§62.52 Definitions.

In addition to the definitions in §62.2 of this part, the following definitions will apply for purposes of this subpart:

The definitions of *Qualifying loans, Commercial loans, Government loans, Educational expenses,* and *Living expenses* as contained in § 62.22 of this part will apply for purposes of this subpart.

Medically underserved area means *health manpower shortage area* or an area which has been designated by a State pursuant to standards described in § 62.54(b)(1) of this subpart which the Secretary has deemed acceptable.

State Loan Repayment Program or *program* means a State loan repayment program authorized under section 338H (42 U.S.C. 254q–1) of the Act.

§ 62.53 Who is eligible for this program?

Any State is eligible to apply for a grant under this subpart.

§ 62.54 What must applications for the State Loan Repayment Program contain?

(a) An application for a grant under this subpart shall be submitted to the Secretary at such time and in such form and manner as the Secretary requires.

(b) The application shall contain a budget and narrative statement describing the manner in which the applicant intends to conduct the project and carry out the requirements of this subpart. In addition, applications must include:

(1) A description of the State's standards for the designation of medically underserved areas, except that no description of designation standards will be required if the State elects to use health manpower shortage areas designated by the Secretary;

(2) An assessment of the need and demand in medically underserved areas within the State for health professions manpower with special emphasis on individuals whose training is in a health profession or specialty identified by the Secretary pursuant to § 62.23(b) of this part. This assessment should include such demographic indicators of the need as the economic accessibility of health care services in the State as measured by poverty levels, the percentage of the service area population without health insurance, and the health status of the population as measured by the rates of infant mortality, low birth weight, geographic barriers and other indicators;

(3) A proposal for the placement of the health profession providers in medically underserved areas with the greatest need and demand in accordance with the need/demand assessment completed in compliance with paragraph (b)(2) of this section;

(4) Adequate assurances that sufficient current year State funds are available to cover the non-Federal share of State Loan Repayment Program costs;

(5) A description of how the program would meet the requirements of § 62.55 to demonstrate its similarity to the NHSC Loan Repayment program;

(6) A description of the source of, and plans for the use of, State matching funds;

(7) A description of how the program would be coordinated with Federal, State and other organized activities within the State which relate to health manpower services and resources;

(8) Identification of the State entity and key personnel who would administer the grant and a description of the qualifications and experience of that entity and its personnel concerning the State's health service delivery system and health manpower needs;

(9) A description of the State's plans for administration of the State's Loan Repayment Program which may include such provisions as annual levels of loan repayment to be made under the program, the number of health professionals to be funded, the frequency and timing of the loan repayments, program incentives for longer periods of service, procedures for monitoring the service of program participants and placing professionals in default for failure to complete their service obligation, penalties for default, provisions for waivers and suspensions, and a description of the contract/obligation process to be used by the State to obligate individuals receiving State loan repayments;

(10) A description of the State's need for Federal assistance in obtaining health professions resources and demonstrated inability to obtain such resources without Federal assistance;

(11) A description of how the State will accord special consideration to medically underserved areas with large minority populations; and

(12) The signature of an individual authorized to act for the State and to assume on behalf of the State the obligations imposed by the statute, the applicable regulations of this subpart and any additional conditions of the grant.

(Approved by the Office of Management and Budget under control number 0915–0131)

§ 62.55 What State Program Elements are required to ensure similarity with the NHSC Loan Repayment Program?

A State Loan Repayment Program supported under this subpart must:

(a) Establish priorities for loan repayment applicants consistent with the provisions of § 62.23 of this part;

(b) Contract only with a person who is (1) enrolled as a full-time student in the final year of a course of study or program in an accredited school in a State leading to a degree in allopathic or osteopathic medicine, dentistry or other health profession, or (2) enrolled in an accredited graduate training program in a State in allopathic or osteopathic medicine or dentistry or other health profession, or (3) a practitioner licensed by a State who has completed training in an accredited graduate training program in allopathic or osteopathic medicine, dentistry or other health profession;

(c) Provide that health professionals participating in a State Loan Repayment Program shall:

(1) Serve for at least 2 years in a medically underserved area identified pursuant to § 62.54(b)(3) of this subpart in the full-time clinical practice of their profession,

(2) Charge for his or her professional services at the usual and customary rate prevailing in the area in which such services are provided, except that if a person is unable to pay such charge, such person shall be charged at a reduced rate or not charged any fee,

(3) In providing health services, not discriminate against any person on the basis of such person's ability to pay for such services or because payment for the health services provided to such person will be made under the insurance program established under part A or B of title XVIII of the Social Security Act or under a State plan for medical assistance approved under title XIX of such Act, and

(4) Agree to accept an assignment under section 1842(b)(3)(B)(ii) of such Act for all services for which payment may be made under part B of title XVIII of such Act and enter into an appropriate agreement with the State agency which administers the State plan for medical assistance under title XIX of such Act to provide service to individuals entitled to medical assistance under the plan;

(d) Repay qualifying loans for participating health professionals;

(e) Provide that the loans of health professionals will be repaid on a periodic basis after the receipt of obligated services by such participant for such period; and

§ 62.56 How are the Federal grant funds and State matching funds to be used under this program?

The Federal share of any program shall not exceed 75 percent of the cost of the approved State program. The Federal share must be used to repay the qualifying loans of health professionals. No portion of the Federal share shall be used to pay for administrative costs of any State Loan Repayment Program. The State's share of the program may be used to repay qualifying loans of health professionals or administrative costs of the State's Loan Repayment Program, or a combination of both. All program administrative costs are to be borne by the State. No portion of the State's share of the program shall consist of Federal funds.

§ 62.57 How will States be selected to participate in this program?

Within the limits of funds available under section 338H of the Act, the Secretary may award grants to State applicants whose proposed Loan Repayment Programs will, in his or her judgment, best promote the purposes of section 338H of the Act, taking into account, among other pertinent factors:

(a) The need of the State for health professions manpower;

(b) The number and type of providers the State proposes to support through this program;

(c) The acceptableness of the State's standards for the designation of medically underserved areas and the appropriateness of the proposed placements of obligated providers;

(d) The degree of similarity between the proposed State Loan Repayment Program and the National Health Service Corps Loan Repayment Program;

(e) The adequacy of the qualifications, the administrative and managerial ability and the experience of the State staff to administer and carry out the proposed project;

(f) The suitability of the applicant's approach and the degree to which the applicant's project is coordinated with Federal, State and other organized activities for meeting the State's health professions manpower needs and resources, including mechanisms for an ongoing evaluation of the program's activities;

(g) The source and plans for use of the State match (including the percentage of the State's match that is proposed to be used for loan repayments), the degree to which the State match exceeds 25% or has increased over time, and the amount of the match relative to the needs and resources of the States; and

(h) The extent to which special consideration will be extended to medically underserved areas with large minority populations.

§ 62.58 What other regulations apply?

Other regulations which apply to this subpart include but are not limited to:

45 CFR part 80—Nondiscrimination under programs receiving Federal assistance through the Department of Health and Human Services-Effectuation of title VI of the Civil Rights Act of 1964

45 CFR part 81—Practice and procedure for hearings under part 80 of this title

45 CFR part 84—Nondiscrimination on the basis of handicap in programs and activities receiving or benefiting from Federal financial assistance

45 CFR part 86—Nondiscrimination on the basis of sex in programs and activities receiving or benefiting from Federal financial assistance

45 CFR part 91—Nondiscrimination on the basis of age in HHS programs or activities receiving Federal financial assistance

45 CFR part 50—Policies of general applicability: Subpart D—Public Health Service grant appeals procedure

45 CFR part 16—Procedures of the Departmental Grant Appeals Board

45 CFR part 74—Administration of grants

45 CFR part 75—Informal grant appeals procedures

45 CFR part 92—Administrative Requirements for grants and cooperative agreements to State and local governments (effective October 1, 1988)

Subpart D—Special Repayment Program

AUTHORITY: Sec. 215 of the Public Health Service Act 58 Stat. 690, as amended, 63 Stat. 35 (42 U.S.C. 216); sec. 204, Pub. L. 100–177, 101 Stat. 1000.

SOURCE: 56 FR 56597, Nov. 6, 1991, unless otherwise noted.

§ 62.71 What is the scope and purpose of the Special Repayment Program?

These regulations apply to the Special Repayment Program authorized under section 204 of Pub. L. 100–177, which provides a time-limited opportunity for persons who were, on November 1, 1987, in breach of a written contract under the Public Health and National Health Service Corps Scholarship Training Program or the National Health Service Corps Scholarship Program to satisfy their scholarship obligations through full-time clinical service. These regulations do not apply to any Public Health and National Health Service Corps Scholarship Training Program or National Health Service Corps Scholarship Program obligation which the Secretary has determined was completely satisfied through service or monetary payment prior to November 1, 1987. The purpose of this program is to supply trained health professionals for the National Health Service Corps, which is used by the Secretary to improve the delivery of health services in health manpower shortage areas.

§ 62.72 Definitions.

In addition to the definitions in § 62.2 of this part, the following definitions will apply for purposes of this subpart:

Eligible defaulters means those individuals who, as of November 1, 1987, were:

(1) In breach of a written contract entered into under section 338A of the Act and liable to the United States under section 338E(b) of the Act and/or in breach of a written contract entered into under section 225 of the Act (as in effect on September 30, 1977) and liable to the United States under section 225(f)(1) of the Act (as in effect on September 30, 1977); and

(2) Not already serving their obligations on December 1, 1987, under a judgment, forbearance agreement, or other written agreement to serve.

HPOL means the Health Manpower Shortage Area Placement Opportunity List described in section 204(b) of Pub. L. 100–177.

Match means that the Secretary has received documentation of:

(1) An offer of employment from a HPOL or SHPOL site which specifies at least the agreed upon salary and start date; and

(2) The Program participant's acceptance of that offer. Provided, however, that if the Program participant would be self-employed, a *match* means that the Secretary has approved a program participant's private practice option application under section 338D(a) of the Act.

Prior approved service means service performed prior to a Program participant's service start date under the Special Repayment Program:

(1) As a member of the National Health Service Corps pursuant to an assignment by the Secretary under section 333 of the Act;

(2) Under a written private practice option agreement signed by the Secretary pursuant to section 338D of the Act; or

(3) In compliance with section 338C(e) of the Act.

Program participant means an eligible defaulter whose contract under section 204 of Pub. L. 100–177 has been accepted and signed by the Secretary.

Scholarship amount means the sum of any amounts paid to, or on the behalf of, a scholarship recipient under the PH/NHSC Scholarship Training Program and/or the Scholarship Program.

SHPOL means the Supplemental Health Manpower Shortage Area Placement Opportunity List described in section 204(d) of Pub. L. 100–177.

Special Repayment Program or *Program* means the program authorized by section 204 of Pub. L. 100–177.

Total debt means the debt that would be owed by a Program participant under section 225(f)(1) of the Act, as in effect on September 30, 1977, and/or section 338E(b) of the Act, as if no payments had been made on the debt.

§ 62.73 What are the procedures for participation in the Special Repayment Program?

(a) *Notice of eligibility for participation in the program.* On or before February 29, 1988, the Secretary will, subject to paragraph (h) of this section, send written notice to each eligible defaulter of the opportunity provided under this Program. The notice will be sent to the last known address of each eligible defaulter and will describe the special repayment options available under the Program.

(b) *Selection of repayment method.* On or before May 29, 1988, eligible defaulters who wish to participate in this Program must sign and submit to the Secretary a written contract to provide service in accordance with either section 204(b) or section 204(c) of Pub. L. 100–177. The election between section 204(b) and section 204(c) of Pub. L. 100–177 is binding on the eligible defaulters.

(c) *Service sites.* Program participants will receive a listing of approved sites appropriate to the service option they have selected. Program participants electing service under section 204(b) of Pub. L. 100–177 will receive a HPOL. Program participants electing service under section 204(c) of Pub. L. 100–177 will receive a SHPOL. The HPOL or SHPOL sent to the Program participant will be specific to the Program participant's profession and his or her specialty training which is most needed by the National Health Service Corps. The Secretary is not required to identify placements for Program participants in a medical specialty for which the National Health service Corps has no need.

(d) *Time frames for matching and commencing service.* If a program participant electing to serve under section 204(b) of Pub. L. 100–177 chooses to serve at a remaining site on the 1988 HPOL, such participant must match to

a site and must begin serving at the site by October 1, 1988. If a Program participant electing to serve under section 204(b) of Pub. L. 100–177 chooses to serve at a site on the 1989 HPOL, such participant must match to a HPOL site by February 15, 1989, and must begin service at the site by October 1, 1989. If a Program participant has elected to serve under section 204(c) of Pub. L. 100–177, such participant must match to a SHPOL site by May 15, 1989, and must begin service at that site by October 1, 1989.

(e) *Site visits.* The Program participant is responsible for the costs of any site visit(s) and any other contact with the site to obtain employment at the site.

(f) *Effect of failure to meet established time frames.* If a Program participant does not match to a site or begin service at that site within the time frames described in paragraph (d) of this section, the Secretary will determine that such individual is not relieved of his or her liability to the United States under the PH/NHSC Scholarship Training Program and/or Scholarship Program (including accrued interest and/or damages).

(g) *Service.* Service must be performed in accordance with subpart II of part D of title III of the Act. Service credit will begin after a Program participant has matched to a HPOL or SHPOL site and has commenced service at that site in accordance with subpart II of part D of title III of the Act.

(h) *Secretary's exclusion authority.* The Secretary is authorized, at any time, to deny or terminate an individual's participation in the Program for reasons related to the individual's professional competence or conduct.

§ 62.74 How much credit will a Program participant receive for monetary repayments made, or for approved service performed, before beginning service under the Special Repayment Program?

(a) Prior approved service performed by a Program participant will be credited to the Program participant for the purpose of calculating the Program participant's remaining service obligation under this Program. Thus, the Program participant's remaining service obligation will be calculated by subtracting the number of days of the Program participant's prior approved service from the number of days of the Program participant's original service obligation under the PH/NHSC Scholarship Training Program and/or the Scholarship Program. If a Program participant has made monetary payments, his or her remaining service obligation will be reduced by converting the monetary payments into days of service credit as set forth in paragraph (b) or (c) of this section, whichever is applicable.

(b) Program participants who elect to serve pursuant to section 204(b) and section 204(c)(2) of Pub. L. 100–177, will not receive a refund of any amounts previously paid but will receive service credit for those payments as follows:

(1) The number of days of service credit will be calculated by dividing the total amount paid by the Program participant prior to the Program participant's service start date by the total debt as of the service start date and multiplying the result of that division by the number of days of the participant's remaining service obligation (as determined by the formula set forth in the second sentence of paragraph (a) of this section).

(2) If the Program participant defaults on a contract under this Program, prior monetary payments will not be credited to service but will be applied to the monetary debt owed by the Program participant.

(c) Program participants who elect to serve under section 204(c)(1) of Pub. L. 100–177 must pay an amount equal to the scholarship amount. Any amounts paid by the Program participant prior to or after entry into the Program, in accordance with § 62.76 of this subpart, will be used to reduce the Program participant's financial obligation incurred under section 204(c)(1) of Pub. L. 100–177. In some cases, the amounts paid before or after entry into the Program will exceed the scholarship amount. These payments in excess of the scholarship amount will be converted into days of service credit under the formula set forth in paragraph (b)(1) of this section. If a Program participant defaults on a contract under this option, the monies paid in excess of the

scholarship amount will not be credited to service but will be credited toward the monetary debt owed by the Program participant under section 338E(b) of the Act or section 225(f)(1) of the Act, as in effect on September 30, 1977. The scholarship amount paid upon entering this option will be forfeited.

§ 62.75 Will individuals serving under the Special Repayment Program receive credit for partial service?

(a) With respect to obligations under the Scholarship Program, a credit will be allowed for partial service under the Special Repayment Program and will result in a reduction of the Program participant's financial obligation in accordance with the following formula:

$$A = 30\frac{\left[t - \left(s + \frac{1}{2}r\right)\right]}{t}$$

In which:

'A' is the amount the United States is entitled to recover;

'0' is the sum of the amounts paid to or on behalf of the Program participant under the Scholarship Program and the interest on such amounts which would be payable if, at the time the amounts were paid, they were loans bearing interest at the maximum legal prevailing rate, as determined by the Treasurer of the United States;

't' is the sum of (1) the number of months of prior approved service plus (2) the number of months of the Program participant's period of obligated service under the Program including any additional months of service incurred pursuant to section 204(c)(2) of Pub. L. 100–177;

's' is the number of months of prior approved service performed by the Program participant before commencing service under this Program; and

'r' is the number of months of service performed by the Program participant in compliance with this Program.

However, where a judgment has been entered against a Program participant, the formula will be revised such that:

'30' is the amount of the judgment representing the Program participant's liability under the Scholarship Program, including any accrued post judgment interest and excluding any monetary payments on the judgment which may have been made by the Program participant;

't' is the sum of (1) the number of months of prior approved service performed by the Program participant after entry of the judgment but before commencing service under this Program plus (2) the number of months of the Program participant's period of obligated service under the Program including any additional months of service incurred pursuant to section 204(c)(2) of Pub. L. 100–177; and

's' is the number of months of prior approved service performed by the Program participant after the entry of the judgment but before commencing service under this Program.

(b) With respect to obligations under the PH/NHSC Scholarship Training Program, if a Program participant fails to complete the period of obligated service under the Program (including any additional months of service incurred pursuant to section 204(c)(1) of Pub. L. 100–177), no credit for partial service under this Program will be allowed.

(c) Where participants have obligations under both the Scholarship Program and the PH/NHSC Scholarship Training Program, credit for service will be applied against the scholarship obligations in the order in which they were incurred.

§ 62.76 How will amounts of money due under the option under section 204(c)(1) of Public Law 100–177 be required to be repaid?

Program participants who elect to serve under section 204(c)(1) of Pub. L. 100–177 will be required to pay the full scholarship amount at least 60 days prior to the service start date specified in the documentation submitted to the Secretary.

PART 63—TRAINEESHIPS

Sec.
63.1 To what programs do these regulations apply?
63.2 Definitions.
63.3 What is the purpose of traineeships?
63.4 What are the minimum qualifications for awards?
63.5 How will NIH make awards?
63.6 How to apply.
63.7 What are the benefits of awards?
63.8 What are the terms and conditions of awards?
63.9 How may NIH terminate awards?
63.10 Other HHS regulations and policies that apply.

AUTHORITY: 42 U.S.C. 216, 283g(d), 284(b)(1)(C), 286b-3, 287c(b).

SOURCE: 60 FR 10719, Feb. 27, 1995, unless otherwise noted.

§ 63.1 To what programs do these regulations apply?

(a) The regulations in this part apply to research traineeships awarded by each Director of a national research institute of NIH, the Director of the National Library of Medicine (NLM), the Director of the National Center for Human Genome Research (NCHGR), the Director of the Office of Alternative Medicine, or designees pursuant to sections 404E(d)(2), 405(b)(1)(C), 472, and 485B of the Public Health Service Act, as amended.

(b) The regulations of this part do not apply to research training which is part of the National Research Service Award Program provided under 42 CFR part 66, the Mental Health Traineeship Program provided under 42 CFR part 64a, or residency training of physicians or other health professionals.

§ 63.2 Definitions.

As used in this part:

Act means the Public Health Service Act, as amended (42 U.S.C. 201 *et seq.*).

Award means an award of funds under sections 404E(d)(2), 405(b)(1)(C), 472, or 485B of the Act, or other sections of the Act which authorize research training or traineeships.

Awardee means an individual awarded a traineeship under sections 404E(d)(2), 405(b)(1)(C), 472, or 485B of the Act, or other sections of the Act which authorize research training or traineeships.

Director means the director of one of the national research institutes of NIH specified in section 401(b)(1) of the Act, the Director of the National Library of Medicine, the Director of the National Center for Human Genome Research, the Director of the Office of Alternative Medicine, or any official of NIH to whom the authority involved has been delegated.

HHS means the Department of Health and Human Services.

NIH means the National Institutes of Health.

PHS means the Public Health Service.

Traineeship means an award of funds under section 404E(d)(2), 405(b)(1)(C), 472, or 485B of the Act, or other sections of the Act authorizing research training or traineeships, and the regulations of this part, to a qualified individual for the person's subsistence and other expenses during a period in which the awardee is acquiring the research training approved under the award.

§ 63.3 What is the purpose of traineeships?

The purpose of an NIH research traineeship is to provide support for financial subsistence to an individual during a period in which the awardee is acquiring training in:

(a) Basic and/or clinical biomedical or behavioral research relating to human health, including extending healthy life and reducing the burdens of illness, or

(b) Medical library science or related fields pertaining to sciences related to health or the communication of health sciences information.

Traineeships are intended to make available in the United States an increased number of persons having special competence in these research fields through developmental training and practical research experience in the facilities of NIH, with supplemental training at other qualified institutions (see § 63.8(a)).

§ 63.4 What are the minimum qualifications for awards?

Minimum qualifications for any traineeship shall be established by the Director and shall be uniformly applicable to all applicants in each traineeship program. These minimum qualifications may include requirements as to citizenship, medical standards, academic degrees, professional or other training or experience, and other factors as may be necessary to the fulfillment of the purpose of the traineeship. The Director may, as a matter of general policy or, in individual cases, waive compliance with any minimum qualification so established to the extent that the applicant or applicants have substantially equivalent qualifications or have such special training, experience or opportunity for service as to make an award particularly appropriate, and to the extent the Director finds it is consistent

with the fulfillment of the purpose of the traineeship.

§63.5 How will NIH make awards?

Subject to the regulations of this part, the Director may award traineeships to those qualified applicants who are best able in that official's judgment to carry out the purpose of the traineeships. These awards may be made for a period of one (1) year or other period, including extensions or renewals, as may be specified.

§63.6 How to apply.

(a) Application for a traineeship shall be made in writing as prescribed by the Director.

(b) In addition to other pertinent information, the Director may require each applicant to submit the following information:

(1) Certification of the applicant's citizenship status;

(2) The applicant's educational background and other qualifications and experience, including previous academic and professional degrees, if any; and

(3) The subject area of the proposed training.

(c) By applying, eligible individuals agree to abide by HHS, PHS, and NIH regulations, and the terms and conditions of the traineeship award which may require compliance with policies and procedures that apply to the proper conduct of research, such as research involving human and animal subjects, patient care, hospital and laboratory procedures, handling of confidential information, and outside employment.

§63.7 What are the benefits of awards?

(a) Subject to the availability of funds, each individual awarded a traineeship may receive a stipend fixed in an amount determined by the Director.

(b) Additional allowances and benefits may be authorized by and at the discretion of the Director, taking into account the cost of living and other factors such as the requirements of the training program and availability of discretionary funds. Discretionary allowances and benefits may include: health benefits coverage; dependents' allowance; travel to pre-award interviews, to first duty station, and return to the place of origin upon conclusion of the traineeship; tuition and institution fees; and other specific costs as may be necessary to fulfill the purpose of the training program.

§63.8 What are the terms and conditions of awards?

All traineeships shall be subject to the following terms and conditions:

(a) Training must be carried out at a facility of the NIH, but may be supplemented by additional training acquired at another institution which is found by the Director to be directly related to the purpose of the traineeship and necessary to its successful completion.

(b) Payments shall be made to the awardee or to the institution for payment to the awardee in accordance with payment schedules as prescribed by the Director for each traineeship program.

(c) The awardee shall reimburse NIH for any overpayment of stipends or other allowances because of early termination of the traineeship or any other reason, unless waived for good cause shown by the awardee.

(d) The Director may establish procedures and requirements applicable to traineeship awards, consistent with the regulations in this part, regarding: (1) The proper conduct of research investigations, including research involving human and animal subjects; (2) patient care; (3) hospital and laboratory procedures; (4) handling of confidential information; (5) outside employment; and (6) additional conditions the Director finds necessary to fulfill the purpose of the traineeship.

(e) The awardee shall sign an agreement to comply with the terms and conditions of the traineeship.

§63.9 How may NIH terminate awards?

The Director may terminate a traineeship at any time:

(a) Upon written request of the awardee; or

(b) If it is determined that the awardee is ineligible, has materially failed to comply with the terms and conditions of the award, or to carry out the purpose for which it was made.

§ 63.10 Other HHS regulations and policies that apply.

Several other policies and regulations apply to awards under this part. These include, but are not necessarily limited to:

45 CFR part 46—Protection of human subjects.
45 CFR part 76—Governmentwide debarment and suspension (nonprocurement) and governmentwide requirements for drug-free workplace (grants).
45 CFR part 80—Nondiscrimination under programs receiving Federal assistance through the Department of Health and Human Services—effectuation of title VI of the Civil Rights Act of 1964.
45 CFR part 81—Practice and procedure for hearings under part 80 of this title.
45 CFR part 84—Nondiscrimination on the basis of handicap in programs and activities receiving Federal financial assistance.
45 CFR part 86—Nondiscrimination on the basis of sex in education programs and activities receiving or benefiting from Federal financial assistance.
45 CFR part 91—Nondiscrimination on the basis of age in HHS programs or activities receiving Federal financial assistance.
51 FR 16958 (May 7, 1986)—NIH Guidelines for Research Involving Recombinant DNA Molecules.
''Public Health Service Policy on Humane Care and Use of Laboratory Animals,'' Office for Protection from Research Risks, NIH (Revised September 1986).
59 FR 14508 (March 28, 1994)—NIH Guidelines on the Inclusion of Women and Minorities as Subjects in Clinical Research.

PART 63a—NATIONAL INSTITUTES OF HEALTH TRAINING GRANTS

Sec.
63a.1 To what programs do these regulations apply?
63a.2 Definitions.
63a.3 What is the purpose of training grants?
63a.4 Who is eligible for a training grant?
63a.5 How to apply for a training grant.
63a.6 How are training grant applications evaluated?
63a.7 Awards.
63a.8 How long does grant support last?
63a.9 What are the terms and conditions of awards?
63a.10 How may training grant funds be spent?
63a.11 Other HHS regulations and policies that apply.

AUTHORITY: 42 U.S.C. 216, 242*l*(b)(3), 284(b)(1)(C), 287c(b), 300cc-15(a)(1), 300cc-41(a)(3)(C), 7403(h)(2).

SOURCE: 61 FR 55111, Oct. 24, 1996, unless otherwise noted.

§ 63a.1 To what programs do these regulations apply?

(a) The regulations of this part apply to:

(1) Grants awarded by the John E. Fogarty International Center for Advanced Study in the Health Sciences, NIH, for training in international cooperative biomedical research endeavors, as authorized under section 307(b)(3) of the Act;

(2) Grants awarded by NIH for research training with respect to the human diseases, disorders, or other aspects of human health or biomedical research, for which the institute or other awarding component was established, for which fellowship support is not provided under section 487 of the Act and which is not residency training of physicians or other health professionals, as authorized by sections 405(b)(1)(C), 485B(b), 2315(a)(1), and 2354(a)(3)(C) of the Act; and,

(3) Grants awarded by the National Institute of Environmental Health Sciences, NIH, for the education and training of physicians in environmental health, as authorized under section 103(h)(2) of the Clean Air Act, as amended.

(b) The regulations of this part also apply to cooperative agreements awarded to support the training specified in paragraph (a) of this section. References to ''grant(s)'' shall include ''cooperative agreement(s).''

(c) The regulations of this part do not apply to:

(1) Research training support under the National Research Service Awards Program (see part 66 of this chapter);

(2) Research training support under the NIH Center Grants programs (see part 52a of this chapter);

(3) Research training support under traineeship programs (see part 63 of this chapter);

(4) Research training support under the NIH AIDS Research Loan Repayment Program (see section 487A of the Act); or

(5) Research training support under the National Library of Medicine training grant programs (see part 64 of this chapter).

§63a.2 Definitions.

As used in this part:

Act means the Public Health Service Act, as amended (42 U.S.C. 201 *et seq.*).

HHS means the Department of Health and Human Services.

NIH means the National Institutes of Health and its organizational components that award training grants.

Nonprofit as applied to any agency or institution, means an agency or institution which is a corporation or association, no part of the net earnings of which inures or may lawfully inure to the benefit of any private shareholder or individual.

Program director means the single individual named by the grantee in the grant application and approved by the Secretary, who is responsible for the management and conduct of the training program.

Project period See §63a.8(a).

Secretary means the Secretary of Health and Human Services and any other official of HHS to whom the authority involved is delegated.

Stipend means a payment to an individual to help meet that individual's subsistence expenses during the training period.

Training grant means an award of funds to an eligible agency or institution for a training program authorized under §63a.1 to carry out one or more of the purposes set forth in §63a.3.

§63a.3 What is the purpose of training grants?

The purpose of a training grant is to provide financial assistance to an eligible agency or institution to enable it to provide research training to individuals in the diagnosis, prevention, treatment, or control of human diseases or disorders, or other aspects of human health or biomedical research, or in environmental health, in order to increase the number of facilities which provide qualified training and the number of persons having special competence in these fields.

§63a.4 Who is eligible for a training grant?

(a) *General.* Except as otherwise provided in this section or as prohibited by law, any public or private for-profit or nonprofit agency, institution, or entity is eligible for a training grant.

(b) *International training grants for AIDS research.* Any international organization concerned with public health is eligible for a training grant to support individuals for research training relating to acquired immunodeficiency syndrome (AIDS), as authorized under section 2315(a)(1) of the Act. In awarding these grants, preference shall be given to:

(1) Training activities conducted by, or in cooperation with, the World Health Organization and

(2) With respect to training activities in the Western Hemisphere, activities conducted by, or in cooperation with, the Pan American Health Organization or the World Health Organization.

§63a.5 How to apply for a training grant.

Any agency, institution, or entity interested in applying for a grant under this part must submit an application at the time and in the form and manner that the Secretary may require.

§63a.6 How are training grant applications evaluated?

The Secretary shall evaluate applications through the officers and employees, experts, consultants, or groups engaged by the Secretary for that purpose, including review or consultation with the appropriate advisory council or other body as may be required by law. The Secretary's evaluation will be for merit and shall take into account, among other pertinent factors, the significance of the program, the qualifications and competency of the program director and proposed staff, the adequacy of the selection criteria for trainees under the program, the adequacy of the applicant's resources available for the program, and the amount of grant funds necessary for completion of its objectives.

§63a.7 Awards.

Criteria. Within the limits of available funds, the Secretary may award training grants for training programs which:

(a) Are determined to be meritorious, and

(b) Best carry out the purposes of the particular statutory program described in §63a.1 and the regulations of this part.

§ 63a.8 How long does grant support last?

(a) The notice of the grant award specifies how long the Secretary intends to support the project without requiring the grantee to recompete for funds. This period, called the ''project period,'' will usually be for one to five years.

(b) Generally, the grant will be initially for one year and subsequent continuation awards will be for one year at a time. A grantee must submit a separate application at the time and in the form and manner that the Secretary may require to have the support continued for each subsequent year. Decisions regarding continuation awards and the funding level of these awards will be made after consideration of such factors as the grantee's progress and management practices, and the availability of funds. In all cases, continuation awards require determination by the Secretary that continued funding is in the best interest of the Federal Government.

(c) Neither the approval of any application nor the award of any grant commits or obligates the Federal Government in any way to make any additional, supplemental, continuation, or other award with respect to any approved application or portion of an approved application.

(d) Any balance of federally obligated grant funds remaining unobligated by the grantee at the end of a budget period may be carried forward to the next budget period, for use as prescribed by the Secretary, provided that a continuation award is made. If at any time during a budget period it becomes apparent to the Secretary that the amount of Federal funds awarded and available to the grantee for that period, including any unobligated balance carried forward from prior periods, exceeds the grantee's needs for that period, the Secretary may adjust the amounts awarded by withdrawing the excess.

§ 63a.9 What are the terms and conditions of awards?

In addition to the requirements imposed by law, grants awarded under this part are subject to any terms and conditions imposed by the Secretary to carry out the purpose of the grant or assure or protect advancement of the approved program, the interests of the public health, or the conservation of grant funds.

§ 63a.10 How may training grant funds be spent?

(a) *Authorized expenditures; general.* A grantee shall expend funds it receives under this part solely in accordance with the approved application and budget, the regulations of this part, the terms and conditions of the grant award, and the applicable cost principles in 45 CFR 74.27.

(b) *Authorized categories of expenditures.* Subject to any limitations imposed in the approved application and budget or as a condition of the award, grant funds may be expended for the following costs:

(1) Expenses of the grantee in providing training and instruction under the particular program, including salaries of faculty and support personnel, and the costs of equipment and supplies;

(2) Stipends and allowances to individuals during the period of their training and instruction; and,

(3) If separately justified and authorized under the particular program, tuition, fees, and trainee travel expenses which are necessary to carry out the purpose of the training grant.

(c) *Expenditures not authorized.* Grant funds may not be expended for:

(1) Compensation for employment or for the performance of personal services by individuals receiving training and instruction; or

(2) Payments to any individual who does not meet the minimum qualifications for training and instruction established by the grantee and approved by the Secretary or who has failed to demonstrate satisfactory participation in the training in accordance with the usual standards and procedures of the grantee.

§63a.11 Other HHS regulations and policies that apply.

Several other HHS regulations and policies apply to this part. These include, but are not necessarily limited to:

42 CFR part 50, subpart A—Responsibility of PHS awardee and applicant institutions for dealing with and reporting possible misconduct in science
42 CFR part 50, subpart D—Public Health Service grant appeals procedure
45 CFR part 16—Procedures of the Departmental Grant Appeals Board
45 CFR part 46—Protection of human subjects
45 CFR part 74—Uniform administrative requirements for awards and subawards to institutions of higher education, hospitals, other nonprofit organizations, and commercial organizations; and certain grants and agreements with states, local governments and Indian tribal governments
45 CFR part 75—Informal grant appeals procedures
45 CFR part 76—Governmentwide debarment and suspension (nonprocurement) and governmentwide requirements for drug-free workplace (grants)
45 CFR part 80—Nondiscrimination under programs receiving Federal assistance through the Department of Health and Human Services effectuation of title VI of the Civil Rights Act of 1964
45 CFR part 81—Practice and procedure for hearings under part 80 of this title
45 CFR part 84—Nondiscrimination on the basis of handicap in programs and activities receiving Federal financial assistance
45 CFR part 86—Nondiscrimination on the basis of sex in education programs and activities receiving or benefiting from Federal financial assistance
45 CFR part 91—Nondiscrimination on the basis of age in HHS programs or activities receiving Federal financial assistance
45 CFR part 92—Uniform administrative requirements for grants and cooperative agreements to State and local governments
45 CFR part 93—New restrictions on lobbying
59 FR 14508 (March 28, 1994)—NIH Guidelines on the Inclusion of Women and Minorities as Subjects in Clinical Research. [Note: this policy is subject to change, and interested persons should contact the Office of Research on Women's Health, NIH, Room 201, Building 1, MSC 0161, Bethesda, MD 20892–0161 (301–402–1770; not a toll-free number) to obtain references to the current version and any amendments.]
59 FR 34496 (July 5, 1994)—NIH Guidelines for Research Involving Recombinant DNA Molecules. [Note: this policy is subject to change, and interested persons should contact the Office of Recombinant DNA Activities, NIH, Suite 323, 6000 Executive Boulevard, MSC 7010, Bethesda, MD 20892–7010 (301–496–9838; not a toll-free number) to obtain references to the current version and any amendments.]
''PHS Grants Policy Statement,'' DHHS Publication No. (OASH) 94–50,000 (Revised April 1, 1994), as amended by the Addendum, dated January 24, 1995. [Note: this policy is subject to change, and interested persons should contact the Extramural Outreach and Information Resources Office (EOIRO), Office of Extramural Research, 6701 Rockledge Drive, Room 6208, MSC 7910, Bethesda, MD 20892–7910 (301–435–0714; not a toll-free number) to obtain references to the current version and any amendments. Information may also be obtained by contacting the EOIRO via its e-mail address (ask nih@odrockm1.od.nih.gov) and by browsing the NIH Home Page site on the World Wide Web (http://www.nih.gov).]
''Public Health Service Policy on Humane Care and Use of Laboratory Animals,'' Office for Protection from Research Risks, NIH (Revised September 1986).

[NOTE: This policy is subject to change, and interested persons should contact the Office for Protection from Research Risks, NIH, Suite 3B01, 6100 Executive Boulevard, MSC 7507, Rockville, MD 20852–7507 (301–496–7005; not a toll-free number) to obtain references to the current version and any amendments.]

PART 64—NATIONAL LIBRARY OF MEDICINE TRAINING GRANTS

Sec.
64.1 Programs to which these regulations apply.
64.2 Definitions.
64.3 Who is eligible for a grant?
64.4 How to apply for a grant.
64.5 How are grant applications evaluated?
64.6 Awards.
64.7 What other conditions apply?
64.8 How may funds be used?
64.9 Other HHS regulations that apply.

AUTHORITY: 42 U.S.C. 216, 286b–3.

SOURCE: 56 FR 29192, June 26, 1991, unless otherwise noted.

§64.1 Programs to which these regulations apply.

(a) The regulations of this part apply to grants under section 472 of the Public Health Service Act (42 U.S.C. 286b–3) to public and private nonprofit institutions to assist in developing, expanding, and improving training programs (excluding training in a biomedical

specialty and residency training) in library science and the field of communications of information pertaining to sciences relating to health.

(b) The regulations of this part also apply to cooperative agreements awarded for these purposes. References to ''grant(s)'' shall include ''cooperative agreement(s).''

(c) The regulations of this part do not apply to research training support under the National Research Service Awards Program (see part 66 of this chapter).

§ 64.2 Definitions.

As used in this part:

HHS means the Department of Health and Human Services.

Nonprofit private entity means an agency, organization, institution, or other entity which may not lawfully hold or use any part of its net earnings to the benefit of any private shareholder or individual which does not hold or use its net earnings for that purpose.

Other trainee costs means those costs other than stipends, such as tuition, fees, and trainee travel, which are directly associated with and necessary for the training of individuals receiving stipends and which are incurred within the period of training.

Project director means the single individual named by the grantee in the grant application and approved by the Secretary, who is responsible for the management and conduct of the project.

Project period. See § 64.6(b).

Secretary means the Secretary of Health and Human Services and any other official of HHS to whom the authority involved is delegated.

Stipend means a payment to an individual that is intended to help meet that individual's subsistence expenses during training.

Training grant means an award of funds to an eligible entity for a project authorized under § 64.1(a).

§ 64.3 Who is eligible for a grant?

Except as otherwise prohibited by law, any public or private nonprofit entity is eligible for a training grant.

§ 64.4 How to apply for a grant.

Applications for grants must include the following information:

(a) *Required information on the proposed project.* (1) The nature, duration, and purpose of the training for which the application is filed.

(2) The name and qualifications of the project director and any key personnel responsible for the proposed project.

(3) A description of the facilities, staff, support services, and other organizational resources available to carry out the project.

(4) The intended number of trainees and the minimum qualifications and criteria for their selection.

(5) A description of the plan for evaluating the proposed project.

(6) Other pertinent information the Secretary may require to evaluate the proposed project.

(b) *Required information on costs.* (1) A budget for the proposed project and a justification of the amount of grant funds requested.

(2) If institutional expenses are requested, a separate statement of the amounts requested for personal services, equipment, supplies, or other nonpersonal services.

(3) If stipend costs are requested, a statement for each grant year of the estimated number of individuals to whom stipends will be provided and the length of time for which the stipend support will be provided. If other trainee costs are requested, they must be separately stated and justified.

(Approved by the Office of Management and Budget under control number 0925–0276)

§ 64.5 How are grant applications evaluated?

The Secretary shall evaluate applications through the officers and employees, experts, consultants, or groups engaged by the Secretary for that purpose. The Secretary's evaluation will be for technical merit and shall take into account, among other pertinent factors, the significance of the project, the qualifications and competency of the project director and proposed staff, the adequacy of selection criteria for trainees for the project, the adequacy of the applicant's resources available for the project, and the amount of

grant funds necessary for completion of its objectives.

§64.6 Awards.

(a) *Criteria*. Within the limits of available funds, the Secretary may award training grants to carry out those projects which:

(1) Are determined by the Secretary to be technically meritorious; and

(2) In the judgment of the Secretary best promote the purpose of the grant program as authorized by section 472 of the Act (42 U.S.C. 286b–3), the regulations of this part (see §64.1), and address program priorities.

(b) *Project period*. (1) The notice of grant award specifies how long the Secretary intends to support the project without requiring the project to recompete for funds. This period, called the project period, will usually be for one to five years.

(2) Generally, the grant will initially be for one year and subsequent continuation awards will also be for one year at a time. A grantee must submit a separate application to have the support continued for each subsequent year. Decisions regarding continuation awards and the funding level of these awards will be made after consideration of such factors as the grantee's progress and management practices, and the availability of funds. In all cases, continuation awards require a determination by the Secretary that continued funding is in the best interest of the Federal Government.

(3) Neither the approval of any application nor the award of any grant commits or obligates the Federal Government in any way to make any additional, supplemental, continuation, or other award with respect to any approved application or portion of an approved application.

(4) Any balance of federally obligated grant funds remaining unobligated by the grantee at the end of a budget period may be carried forward to the next budget period, for use as prescribed by the Secretary, provided a continuation award is made. If at any time during a budget period it becomes apparent to the Secretary that the amount of Federal funds awarded and available to the grantee for that period, including any unobligated balance carried forward from prior periods, exceeds the grantee's needs for that period, the Secretary may adjust the amounts awarded by withdrawing the excess.

§64.7 What other conditions apply?

(a) Grants awarded under this part are subject to the following conditions:

(1) The grantee may not materially change the quality, nature, or duration of the project unless the written approval of the Secretary is obtained prior to the change.

(2) The grantee must submit to the Secretary, in the manner prescribed by the Secretary, the name and other pertinent information regarding each individual who is awarded a stipend under a grant.

(b) The Secretary may impose additional conditions prior to the award of any grant under this part if it is determined by the Secretary that the conditions are necessary to carry out the purpose of the grant.

(Approved by the Office of Management and Budget under control number 0925–0276)

§64.8 How may funds be used?

A grantee shall expend funds it receives under this part solely in accordance with the approved application and budget, the regulations of this part, the terms and conditions of the grant award, and the applicable cost principles in subpart Q of 45 CFR part 74. The funds may not be expended for:

(a) Compensation for employment or for the performance of personal services by individuals receiving training and instruction; or

(b) Payments to any individual who does not meet the minimum qualifications for training and instruction established by the grantee and approved by the Secretary or who has failed to demonstrate satisfactory participation in the training in accordance with the usual standards and procedures of the grantee.

§64.9 Other HHS regulations that apply.

Several other regulations apply to grants under this part. These include, but are not necessarily limited to:

42 CFR part 50, subpart D—Public Health Service grant appeals procedure.

45 CFR part 16—Procedures of the Departmental Grant Appeals Board.
45 CFR part 74—Administration of grants.
45 CFR part 75—Informal grant appeals procedures.
45 CFR part 76—subparts A–F.
Governmentwide debarment and suspension (nonprocurement) and requirements for drug-free workplace (grants).
45 CFR part 80—Nondiscrimination under programs receiving Federal assistance through the Department of Health and Human Services—effectuation of title VI of the Civil Rights Act of 1964.
45 CFR part 81—Practice and procedure for hearings under 45 CFR part 80 of this title.
45 CFR part 84—Nondiscrimination on the basis of handicap in programs and activities receiving or benefiting from Federal financial assistance.
45 CFR part 86—Nondiscrimination on the basis of sex in education programs and activities receiving or benefiting from Federal financial assistance.
45 CFR part 91—Nondiscrimination on the basis of age in HHS programs or activities receiving Federal financial assistance.
45 CFR part 92—Uniform administrative requirements for grants and cooperative agreements to state and local governments.

PART 64a—OBLIGATED SERVICE FOR MENTAL HEALTH TRAINEESHIPS

Sec.
64a.101 Purpose.
64a.102 To whom do these regulations apply?
64a.103 Definitions.
64a.104 What requirements are imposed upon grantees?
64a.105 What are the conditions of obligated service?

AUTHORITY: Sec. 803, Pub. L. 96–398, 94 Stat. 1607–1608 (42 U.S.C. 242a).

SOURCE: 46 FR 39979, Aug. 5, 1981, unless otherwise noted.

§ 64a.101 Purpose.

This part establishes requirements to implement the service payback obligation of individuals who receive clinical traineeships in pyschology, psychiatry, social work, or nursing (that are not of limited duration or experimental nature) under section 303 of the Public Health Service Act.

§ 64a.102 To whom do these regulations apply?

This part applies to any institution which receives a training grant under section 303 of the Public Health Service Act and to any individual who receives a stipend or other trainee allowances under such a grant for any period beginning on or after July 1, 1981, for clincial training in the field of psychology, psychiatry, nursing, or social work, except for training that is of a limited duration or experimental nature.

§ 64a.103 Definitions.

As used in this part:

Act means the Public Health Service Act as amended by Pub. L. 96–398.

Clinical traineeship means a stipend or other trainee allowances provided to an individual for clinical training in psychology, psychiatry, nursing, or social work, except for training that is of a limited duration or experimental nature, under a training grant authorized by section 303 of the Act.

Community Mental Health Centers Act means the Community Mental Health Centers Act (42 U.S.C. 2689 *et seq.*) other than Part D thereof.

Experimental nature refers to the training of undergraduates; the training of individuals in disciplines other than psychology, psychiatry, nursing, or social work; and any other training which the Secretary specifically designates as experimental in the notice of award for a training grant under section 303 of the Act.

Limited duration means a period that is equal to or less than 180 days, computed cumulatively over a two year period which begins on the first day of the clinical traineeship.

Mental Health Systems Act means the Mental Health Systems Act (42 U.S.C. 9401 *et seq.*).

Nonprofit private entity means an agency, organization, institution or other entity which may not lawfully hold or use any part of its net earnings to the benefit of any private shareholder or individual and which does not hold or use its net earnings for that purpose.

Other trainee allowances means financial assistance for those costs not covered by stipends, such as tuition, fees, and trainee travel, which are directly associated with and necessary to the

training of individuals receiving stipends and are incurred within the period of training.

Secretary means the Secretary of Health and Human Services or other official of the Department to whom the authority involved has been delegated.

Stipend means financial assistance to an individual that is intended to help meet that individual's subsistence expenses during training.

§ 64a.104 What requirements are imposed upon grantees?

Recipients of training grants under section 303 of the Act that provide a clinical traineeship to any individual must:

(a) Give each such individual written notice of the service payback and recovery requirements of this part at the time the individual becomes a candidate for the traineeship;

(b) Before awarding a clinical traineeship, conduct an entrance interview with the individual in order to explain and emphasize the service obligation the individual is incurring, obtain the individual's written assurance that he or she will satisfy the requirements of § 64a.105, and document, in accordance with paragraph (d) of this section, the entrance interview on the form containing the individual's written assurance.

(c) At the time of termination of the clinical traineeship,

(1) Notify the Secretary in writing of the date on which the individual's traineeship is terminated;

(2) Conduct an exit interview with the individual to remind the trainee of the service obligation, to fully explain the consequences that will incur should the trainee fail to satisfy the obligation, and, to tell the individual that the Secretary has been notified of the date of termination of the traineeship; and

(3) Document, in accordance with paragraph (d) of this section, the exit interview on the form notifying the Secretary of the termination of the traineeship.

(d) Document the entrance and exit interviews with at least the following information: The date of the interview, the names of the participants involved in the interview, and a statement that the interview included an explanation to the individual of the service payback requirement and the consequences of failing to fulfill the service payback requirement.

(Approved by the Office of Budget and Management under control number 0930–0120)

[46 FR 39979, Aug. 5, 1981, as amended at 52 FR 18359, May 15, 1987]

§ 64a.105 What are the conditions of obligated service?

In order to receive a clinical traineeship an individual must comply with the following conditions:

(a) *Written assurance.* Prior to the award of a clinical traineeship, the individual must sign a written assurance (in such form and manner as the Secretary prescribes) that he or she will satisfy the requirements of this section.

(b) *Commencement and crediting of service.* (1) An individual must start the obligated service within twenty-four months after termination of the clinical traineeship and carry out the service on a continuous basis unless, as specified in paragraph (e) of this section, the individual has requested and had approved, respectively, an extension of the time for beginning the service, or a break in service.

(2) Following termination of the traineeship, the individual must annually provide (in such form and manner as the Secretary prescribes) a written report describing those previous years' activities which are related to service that fulfills the payback obligation. The Secretary will review this report and credit all service performed in those categories specified in paragraph (d) of this section toward the individual's payback obligation, except any service which is performed:

(i) Before termination of the individual's clinical traineeship; and

(ii) As part of any activity, such as course work, preparation of a dissertation or thesis, or practicum, which is needed to complete the training for which the individual received the traineeship.

(c) *Duration of obligation.* The period of service payback must equal the period of support under the clinical traineeship on a month for month basis.

(d) *Performance of the obligated service*—(1) *General requirements.* The obligated service must consist of the provision of service for which the individual was trained (in the training program for which the clinical traineeship was received) and must be performed on a full-time basis (not less than 30 hours per week averaged over the obligated service period).

(2) *Preferred service.* Except as provided under paragraph (d)(3) of this section, the individual must provide the obligated service in:

(i) A public inpatient mental institution;

(ii) Any entity which is receiving or has received a grant under the Mental Health Systems Act or the Community Mental Health Centers Act;

(iii) A psychiatric manpower shortage area designated by the Secretary under section 332 of the Public Health Service Act and 42 CFR part 5;

(iv) Any public or private nonprofit entity or in any nursing home (whether public, private nonprofit, or for profit) in which 50 percent or more of those served are within one or more of the following groups: Racial or ethnic minorities (American Indian or Alaskan Native, Asian or Pacific Islander, Black, Hispanic), chronically mentally ill, mentally retarded, criminal or delinquent populations, rape victims, physically handicapped, abusers of alcohol, or persons addicted to drugs or other substances, children and adolescents, the elderly, poverty populations, migrants, members of the armed forces (or veterans if seen in a Federal facility), residents of areas other than those defined as urbanized by the Department of Commerce, or any other special populations, such as groups of refugees or disaster victims, which are specifically designated by the Secretary for this purpose.

(3) *Alternate service.* If the individual obtains the written approval of the Secretary, the individual may fulfill his or her obligation by:

(i) Serving in any public or private nonprofit entity or in any nursing home (whether public, private nonprofit, or for profit) in which not less than 25 percent of those served are within one or more of the underserved population groups listed in paragraph (d)(2)(iv) of this section. The individual must demonstrate a service commitment of more than 50 percent of his or her time to the targeted populations.

(ii) Teaching, conducting research, or conducting evaluation directed at improving alcohol, drug abuse or mental health services to one or more of the priority population groups listed in paragraph (d)(2)(iv) of this section, or working in a position which fosters the closer collaboration of health and alcohol, drug abuse or mental health services.

(iii) Providing in a public or private nonprofit entity consultation, training and education, liaison, community support or other professional services for which the individual was trained when the individual's work is directed toward improving alcohol, drug abuse or mental health services to the priority populations listed in paragraph (d)(2)(iv) of this section.

(e) *Conditions for deferral or break in service, waiver, or cancellation.* (1) Upon receipt of a written request showing good cause therefor by the individual having a payback obligation, the Secretary may:

(i) Extend the period for beginning the obligated service (24 months after termination of the clinical traineeship), permit breaks in the required continuous service or extend the period for repayment under paragraph (g)(2) of this section, if it is determined that:

(A) An extension or break in service is necessary for the completion of training;

(B) Performance of the obligation must be delayed because a temporary disability makes present performance impossible; or

(C) Performance of the obligation must be delayed because present performance would involve a substantial hardship and failure to extend the period would be against equity and good conscience.

(ii) Waive, in whole or in part, the service payback and recovery requirements of this section if it is determined that fulfillment would be impossible because the individual is permanently and totally disabled.

(iii) In making determinations under § 64a.105(e)(1)(i)(C), the Secretary will

take into consideration the following factors:

(A) The individual's present financial resources and obligations;

(B) The individual's estimated future financial resources and obligations;

(C) The reasons for the individual's failure to complete the requirements within the prescribed period, such as problems of a personal nature;

(D) The unavailability of employment opportunities appropriate to the individual's education and training; and

(E) Any other extenuating circumstances.

(2) Upon receipt of written notice giving evidence of a conflicting obligation under section 752 or 753 of the Act or of an election to fulfill an obligation under section 472 of the Act prior to an obligation under this section, the Secretary will extend the period for beginning service (24 months after termination of the clinical traineeship), permit breaks in the required continuous service or extend the period for repayment under paragraph (g)(1), as appropriate.

(3) The service payback and recovery obligations of an individual will be cancelled upon the submission to the Secretary of a certificate of that individual's death or other evidence which the Secretary determines to be satisfactory.

(f) *Conflicting or multiple payback obligations.* In any case where the individual has, in addition to a payback obligation incurred under this section, an obligation to perform service under section 752 or 753 of the Act (because of receipt of a National Health Service Corps scholarship) or under section 472 of the Act (because of receipt of a National Research Service Award), or both, performance of the same activity may not be counted toward more than one of these obligations. In determining the order in which obligations must be fulfilled, obligations under section 752 or 753 take precedence over obligations incurred under this section. However, with respect to obligations under this section and 472, the individual may elect which obligation to fulfill first. Any individual who has an obligation under section 752 or 753 or makes an election to fulfill an obligation under section 472 prior to an obligation under this section, must give written notice to the Secretary as provided by paragraph (e)(3) of this section.

(g) *Recovery for failure to perform obligated service.* (1) If an individual fails to begin or complete the obligated service in accordance with the requirements of paragraphs (a) through (f) of this section, that individual is obligated to repay the United States an amount equal to three times the cost of the award (including stipends and other trainee allowances) plus interest on that amount calculated for the total period since the trainee failed to perform the obligated service at the rate set by the Secretary of the Treasury for National Research Service Awards prevailing on the date on which the period of appointment begins, multiplied, in any case in which the service that was required has been performed in part, by the percentage which the length of service that was not performed is to the length of the service that was required to be performed. The amount will be determined under the following formula:

$$A = 3(\theta + mi\theta)\frac{(t-s)}{(t)}$$

where

A=the amount the United States is entitled to recover;

θ=the cost of the clinical traineeship (including stipends and other trainee allowances);

m=the number of months since the trainee failed to perform obligated service;

i=the National Research Service Award rate on the date which the period of appointment begins divided by twelve;

t=the total number of months of the service obligation;

s=the number of months that have been served.

(2) Unless the Secretary extends the repayment period as provided in paragraph (e) of this section, the individual shall pay to the United States the total amount which the United States is entitled to recover under paragraph (g)(1) of this section immediately upon the date that the individual fails to begin or complete the period of obligated service (including failing to comply

with the applicable terms and conditions of an extension or break in service granted the individual) or upon the date that the individual indicates his or her intention not to fulfill the service obligation as determined by the Secretary. The amount is considered a debt owed to the United States, with interest accruing monthly upon the total debt as provided under paragraph (g)(1) of this section.

[46 FR 39979, Aug. 5, 1981, as amended at 52 FR 18359, May 15, 1987]

PART 65—NATIONAL INSTITUTE OF ENVIRONMENTAL HEALTH SCIENCES HAZARDOUS WASTE WORKER TRAINING

Sec.

65.1 To what projects do these regulations apply?
65.2 Definitions.
65.3 Who is eligible to apply for a grant?
65.4 Project requirements.
65.5 How will applications be evaluated?
65.6 How long does grant support last?
65.7 For what purposes may grant funds be spent?
65.8 What additional Department regulations apply to grantees?
65.9 Additional conditions.

AUTHORITY: 42 U.S.C. 9660a; 49 U.S.C. App. 1816.

SOURCE: 55 FR 42568, Oct. 22, 1990, unless otherwise noted.

§ 65.1 To what projects do these regulations apply?

(a) The regulations in this part apply to:

(1) The program of grants for the training and education of workers who are or are likely to be engaged in activities related to hazardous waste removal or containment, or emergency response that is authorized under section 126(g) of the SARA; and

(2) The program of grants to support qualified non-profit organizations for the purpose of providing training and education to hazardous materials employees regarding: the safe unloading, loading, handling, storage, and transportation of hazardous materials; and, emergency preparedness for responding to accidents or incidents involving the transportation of hazardous materials that is authorized under section 118 of the HMTA.

(b) Grants are available for curriculum and training materials development, technical support of training, direct student training, training program evaluation and related activities. Target populations for this training are workers and supervisors who are or are likely to be engaged in hazardous substance removal or other activities which expose or potentially expose these workers to hazardous substances in activities such as:

(1) Waste handling and processing at waste generators and active and inactive hazardous substance treatment, storage, and disposal facilities;

(2) Clean up, removal, containment, or remedial actions at waste sites;

(3) Hazardous substance emergency response;

(4) Hazardous substance disposal site risk assessment and investigation, clean up, or remedial actions; and

(5) Transportation of hazardous wastes.

Target populations may also be regulated under standards promulgated by the Secretary of Labor, the Secretary of Transportation, the Administrator of the Environmental Protection Agency, and other agencies under section 126(g) of the SARA or section 106(b) of the HMTA.

(c) Two types of grants are available: Program grants covering the full range of activities, including program development, direct worker training and education, and program evaluation; and planning grants under the SARA.

(1) Planning grants are intended to assist organizations which demonstrate potential for providing hazardous worker training, but need additional developmental efforts prior to initiation of full curriculum development and training activities. A limited number of one-year planning grants may be funded at a level determined appropriate by the Director. After successful completion of a one-year planning grant, a recipient may apply for a full program grant on a competitive basis.

(2) Full program grants will be awarded to organizations with demonstrated capability to provide worker health and safety training and education and demonstrated ability to

identify, describe, and access target populations. Full program grantees must be able to immediately initiate curriculum development and worker training activities.

[55 FR 42568, Oct. 22, 1990; 59 FR 64141, Dec. 13, 1994]

§65.2 Definitions.

As used in this part:

Award or *grant* means a grant or cooperative agreement made under section 126(g) of the SARA or section 118 of the HMTA.

Director means the Director, National Institute of Environmental Health Sciences, or the Director's delegate.

HHS means the Department of Health and Human Services.

HMTA means the Hazardous Materials Transportation Act, as amended (49 U.S.C. App. 1801 *et seq.*).

NIEHS means the National Institute of Environmental Health Sciences, an organizational component of the National Institutes of Health, as authorized by sections 401(b)(1)(L) and 463 of the Public Health Service Act (42 U.S.C. 281(b)(1)(L) and 285(l).

NIH means the National Institutes of Health.

Nonprofit as applied to any agency, organization, institution, or other entity means a corporation or association no part of the net earnings of which inures or may lawfully inure to the benefit of any private shareholder or individual.

SARA means the Superfund Amendments and Reauthorization Act of 1986, Public Law 99–499, as amended (42 U.S.C. 9601 *et seq.*).

Stipend means a payment to an organization that is intended to help meet that organization's subsistence expenses for trainees during the training period.

Training grant means an award of funds to an eligible entity for a project authorized under §65.1.

[55 FR 42568, Oct. 22, 1990; 59 FR 64141, Dec. 13, 1994]

§65.3 Who is eligible to apply for a grant?

Public and private nonprofit entities providing worker health and safety education and training may apply for grants under these regulations. Applicants for a grant may use services, as appropriate, of other public or private organizations necessary to develop, administer, or evaluate proposed worker training programs so long as the majority of the work is done by the applicant.

§65.4 Project requirements.

In addition to meeting the requirements specified in the application, the instructions accompanying it, and the regulations referred to in §65.8, each applicant must meet the following requirements:

(a) Two or more nonprofit organizations may join in a single application and share grant resources in order to maximize worker group coverage, enhance the effectiveness of training, and bring together appropriate academic disciplines and talents. Joint applications must describe the cooperative arrangements for program integration and effectiveness. Specific expertise, facilities, or services to be provided by each participating member must be identified.

(b) Each applicant must detail the nature, duration, and purpose of the training for which the application is filed. The proposed training program must meet the standards promulgated by the Secretary of Labor and Secretary of Transportation under section 126(g) of the SARA or section 106(b) of the HMTA, and such additional requirements as the Director may prescribe to ensure appropriate health and safety training.

(c) The applicant must provide assurance that the applicant will not discriminate in the selection of trainees or instructors on the basis of membership or nonmembership in a union.

[55 FR 42568, Oct. 22, 1990; 59 FR 64141, Dec. 13, 1994]

§65.5 How will applications be evaluated?

(a) The Director shall evaluate applications through the officers and employees, and experts and consultants engaged by the Director for that purpose. The Director's first level of evaluation will be for technical merit and shall take into account, among other pertinent factors, the significance of the project, the qualifications and

competency of the project director and proposed staff (including the ability to manage complex training programs), the adequacy of selection criteria for trainees for the project, the adequacy of the detailed training plan including provision for hands-on training, the adequacy of the applicant's resources available for the project, the amount of grant funds necessary for completion of its objectives, and how well the projects meet training criteria in OSHA's Hazardous Waste Operations and Emergency Response Regulation (29 CFR 1910.120) and/or how well they cover the target populations listed in § 65.1(b). A second level of review will be conducted for program relevance.

(b) Within the limits of funds available, the Director may award training grants to carry out those projects which have satisfied the requirements of the regulations of this part; are determined by the Director to be technically meritorious; and in the judgment of the Director best promote the purposes of the grant programs authorized by section 126(g) of the SARA or section 118 of the HMTA, the regulations of this part, and program priorities.

[55 FR 42568, Oct. 22, 1990; 59 FR 64141, Dec. 13, 1994]

§ 65.6 How long does grant support last?

(a) The notice of grant award specifies how long NIEHS intends to support the project without requiring the project to recompete for funds. This period, called the project period, will usually be for 1–5 years.

(b) Generally, the grant will initially be for one year and subsequent continuation awards will also be for one year at a time. A grantee must submit a separate application to have the support continued for each subsequent year. Decisions regarding continuation awards and the funding level of such awards will be made after consideration of such factors as the grantee's progress and management practices and the availability of funds. In all cases, continuation awards require a determination by the NIEHS that continued funding is in the best interest of the Federal Government.

(c) Neither the approval of any application nor the award of any grant commits or obligates the Federal Government in any way to make any additional, supplemental, continuation, or other award with respect to any approved application or portion of an approved application.

§ 65.7 For what purposes may grant funds be spent?

Individuals receiving training shall be entitled only to the stipends and allowances included in a budget approved by the Director, taking into account the cost of living and such other factors as the needs of the program and the availability of funds.

§ 65.8 What additional Department regulations apply to grantees?

Several other regulations and policies apply to grants under this part. These include, but are not limited to:

42 CFR part 50, subpart D—Public Health Service grant appeals procedure.

45 CFR part 16—Procedures of the Departmental Grant Appeals Board.

45 CFR part 74—Administration of grants.

45 CFR part 75—Informal grant appeals procedures.

45 CFR part 76, subparts A–F—Government-wide debarment and suspension (nonprocurement) and government-wide requirements for drug-free workplace (grants).

45 CFR part 80—Nondiscrimination under programs receiving Federal assistance through the Department of Health and Human Services—Effectuation of title VI of the Civil Rights Act of 1964.

45 CFR part 81—Practice and procedure for hearings under part 80 of this title.

45 CFR part 84—Nondiscrimination on the basis of handicap in programs and activities receiving or benefiting from Federal financial assistance.

45 CFR part 86—Nondiscrimination on the basis of sex in education programs and activities receiving or benefiting from Federal financial assistance.

45 CFR part 91—Nondiscrimination on the basis of age in Health and Human Services programs and activities receiving Federal financial assistance.

45 CFR part 92—Uniform Administrative Requirements for Grants and Cooperative Agreements to State and local Governments.

45 CFR part 93—New restrictions on lobbying.

§65.9 Additional conditions.

The Director may with respect to any award impose additional conditions prior to, or at the time of, any award when, in the Director's judgment, such conditions are necessary to assure the carrying out of the purposes of the award, the interest of the public health, or the conservation of funds awarded.

PART 65a—NATIONAL INSTITUTE OF ENVIRONMENTAL HEALTH SCIENCES HAZARDOUS SUBSTANCES BASIC RESEARCH AND TRAINING GRANTS

Sec.

65a.1 To what programs do these regulations apply?
65a.2 Definitions.
65a.3 Who is eligible to apply for a grant?
65a.4 What are the program requirements?
65a.5 How to apply.
65a.6 How will applications be evaluated?
65a.7 Awards.
65a.8 How long does grant support last?
65a.9 What are the terms and conditions of award?
65a.10 For what purposes may grant funds be spent?
65a.11 Other HHS regulations and policies that apply.

AUTHORITY: 42 U.S.C. 216, 9660(a).

SOURCE: 61 FR 55114, Oct. 24, 1996, unless otherwise noted.

§65a.1 To what programs do these regulations apply?

(a) The regulations of this part apply to the award of grants to support programs for basic research and training directed towards understanding, assessing, and attenuating the adverse effects on human health resulting from exposure to hazardous substances, as authorized under section 311(a) of the Act (42 U.S.C. 9660(a)). The purpose of these programs is to carry out coordinated, multi-component, interdisciplinary research consisting of at least three or more biomedical research projects relating to hazardous substances and at least one non-biomedical research project in the fields of ecology, hydrogeology, and/or engineering, and including the training of investigators as part of the grantee's overall program.

(b) The regulations of this part also apply to cooperative agreements awarded to support the programs described in paragraph (a) of this section. References to ''grant(s)'' shall include ''cooperative agreement(s).''

(c) The regulations of this part do not apply to:

(1) Research training support under the National Research Service Awards Program (see part 66 of this chapter),

(2) Research, demonstration, and training support under the NIH Center Grants programs (see part 52a of this chapter),

(3) Research training support under traineeship programs (see parts 63 and 64a of this chapter), or

(4) Research training support under the NIH AIDS Research Loan Repayment Program authorized under section 487A of the Public Health Service Act, as amended (42 U.S.C. 288–1).

§65a.2 Definitions.

As used in this part:

Act means the Comprehensive Environmental Response, Compensation, and Liability Act of 1980, as amended (42 U.S.C. 9601 et seq.).

Award or *grant* means a grant or cooperative agreement awarded under section 311(a) of the Act (42 U.S.C. 9660(a)).

Director means the Director of the National Institute of Environmental Health Sciences, or the Director's delegate.

HHS means the Department of Health and Human Services.

Institution of higher education means an educational institution in any state which (1) admits as regular students only persons having a certificate of graduation from a school providing secondary education, or the recognized equivalent of such a certificate, (2) is legally authorized within the state to provide a program of education beyond secondary education, (3) provides an educational program for which it awards a bachelor's degree or provides not less than a two-year program which is acceptable for full credit toward a bachelor's degree, (4) is a public or other nonprofit institution, and (5) is accredited by a nationally recognized accrediting agency or association

or, if not so accredited, (i) is an institution with respect to which the Secretary of Education has determined that there is satisfactory assurance, considering the resources available to the institution, the period of time, if any, during which it has operated, the effort it is making to meet accreditation standards, and the purpose for which this determination is being made, that the institution will meet the accreditation standards of a nationally recognized accrediting agency or association within a reasonable time, or (ii) is an institution whose credits are accepted, on transfer, by not less than three institutions which are so accredited, for credit on the same basis as if transferred from an institution so accredited. The term also includes any school which provides not less than a one-year program of training to prepare students for gainful employment in a recognized occupation and which meets the provisions of paragraphs (1), (2), (4), and (5) of this definition. The term also includes a public or nonprofit private educational institution in any state which, in lieu of the requirement in paragraph (1), admits as regular students persons who are beyond the age of compulsory school attendance in the state in which the institution is located and who meet the requirements of section 1091(d) of title 20 U.S. Code, as amended. For purposes of this definition, the Secretary of Education publishes a list of nationally recognized accrediting agencies or associations which that official determines to be reliable authority as to the quality of training offered. This list is found in the brochure, ''Nationally Recognized Accrediting Agencies and Associations Criteria and Procedures for Listing by the U.S. Secretary of Education and Current List.''

[NOTE: This brochure is subject to change, and interested persons should contact the U.S. Department of Education Office of Post-Secondary Education, Accreditation and State Liaison Division, ROB 3, 7th and D Streets, S.W., Room 37–15, Washington, DC 20202–5244 (202–708–7417; not a toll-free number) to obtain a current version of the brochure and any amendments.]

NIEHS means the National Institute of Environmental Health Sciences, an organizational component of the National Institutes of Health, as authorized under sections 401(b) and 463 of the Public Health Service Act, as amended (42 U.S.C. 281(b) and 185*l*).

NIH means the National Institutes of Health.

Nonprofit, as applied to any agency, organization, institution, or other entity, means a corporation or association no part of the net earnings of which insures or may lawfully inure to the benefit of any private shareholder or individual.

PHS means the Public Health Service.

Program means the activity to carry out research and training supported by a grant under this part.

Program director means the single individual designated by the grantee in the grant application and approved by the Director, who is responsible for the scientific and technical direction of the research component and the conduct of the training component under a program.

Project period means the period of time, from one to five years, specified in the notice of grant award that NIEHS intends to support a proposed program without requiring the program awardee to recompete for funds.

Secretary means, unless the context otherwise requires, the Secretary of Health and Human Services or other official of HHS to whom the authority involved is delegated.

§ 65a.3 Who is eligible to apply for a grant?

(a) Except as otherwise prohibited by law, any public or private nonprofit institution of higher education may apply for an award under this part.

(b) Awardee institutions may carry out portions of the research or training components of an award through contracts with appropriate organizations, including:

(1) Generators of hazardous wastes;

(2) Persons involved in the detection, assessment, evaluation, and treatment of hazardous substances;

(3) Owners and operators of facilities at which hazardous substances are located; and

(4) State and local governments.

§65a.4 What are the program requirements?

The applicant shall include the following in its proposed program for which support is requested under this part:

(a) *Basic research component.* The program shall include three or more meritorious biomedical research projects, including epidemiologic studies relating to the study of the adverse effects of hazardous substances on human health, and at least one meritorious project involving hydrogeologic or ecologic research which shall cumulatively address:

(1) Methods and technologies to detect hazardous substances in the environment;

(2) Advanced techniques for the detection, assessment, and evaluation of the effects of these substances on human health;

(3) Methods to assess the risks to human health presented by these substances; and

(4) Basic biological, chemical, and/or physical methods to reduce the amount and toxicity of these substances.

(b) *Training component.* The program shall include the following kinds of training, as part of or in conjunction with the basic research component:

(1) Graduate training in environmental and occupational health and safety and in public health and engineering aspects of hazardous waste control; and/or

(2) Graduate training in the geosciences, including hydrogeology, geological engineering, geophysics, geochemistry, and related fields, necessary to meet professional personnel needs in the public and private sectors and to carry out the purposes of the Act; and

(3) Worker training relating to handling hazardous substances, which includes short courses and continuing education for state and local health and environmental agency personnel and other personnel engaged in the handling of hazardous substances, in the management of facilities at which hazardous substances are located, and in the evaluation of the hazards to human health presented by these facilities.

§65a.5 How to apply.

Each institution desiring a grant under this part must submit an application at the time and in the form and manner as the Secretary may require.

§65a.6 How will applications be evaluated?

The Director shall evaluate applications through the officers and employees, experts, consultants, or groups engaged by the Director for that purpose, including review by the National Advisory Environmental Health Sciences Council in accordance with peer review requirements set forth in part 52h of this chapter. The Director's first level of evaluation will be for technical merit and shall take into account, among other pertinent factors, the significance of the program, the qualifications and competency of the program director and proposed staff, the adequacy of the applicant's resources available for the program, and the amount of grant funds necessary for completion of its objectives. A second level of review will be conducted by the National Advisory Environmental Health Sciences Council.

§65a.7 Awards.

Criteria. Within the limits of available funds, the Director may award grants to carry out those programs which:

(a) Are determined by the Director to be meritorious; and

(b) In the judgment of the Director, best promote the purposes of the grant program, as authorized under section 311(a) of the Act and the regulations of this part, and best address program priorities.

§65a.8 How long does grant support last?

(a) The notice of grant award specifies how long NIEHS intends to support the project without requiring the grantee to recompete for funds. This period, called the project period, may be for 1–5 years.

(b) Generally, the grant will initially be for one year, and subsequent continuation awards will also be for one year at a time. A grantee must submit a separate application at the time and

in the form and manner as the Secretary may require to have the support continued for each subsequent year. Decisions regarding continuation awards and the funding level of these awards will be made after consideration of such factors as the grantee's progress and management practices, and the availability of funds. In all cases, continuation awards require a determination by the Director that continued funding is in the best interest of the Federal Government.

(c) Neither the approval of any application nor the award of any grant commits or obligates the Federal Government in any way to make any additional, supplemental, continuation or other award with respect to any approved application or portion of an approved application.

(d) Any balance of federally obligated grant funds remaining unobligated by the grantee at the end of a budget period may be carried forward to the next budget period, for use as prescribed by the Director, provided a continuation award is made. If at any time during a budget period it becomes apparent to the Director that the amount of Federal funds awarded and available to the grantee for that period, including any unobligated balance carried forward from prior periods, exceeds the grantee's needs for that period, the Director may adjust the amounts awarded by withdrawing the excess.

§ 65a.9 What are the terms and conditions of awards?

In addition to being subject to other applicable regulations (see § 65a.11), grants awarded under this part are subject to the following terms and conditions:

(a) *Material changes.* Except as otherwise provided by 45 CFR 74.25, the grantee may not materially change the quality, nature, scope, or duration of the program unless the written approval of the Director is obtained prior to the change.

(b) *Additional conditions.* The Director may impose additional conditions prior to the award of any grant under this part if it is determined by the Director that the conditions are necessary to carry out the purpose of the grant or assure or protect advancement of the approved program, the interests of the public health, or the conservation of grant funds.

§ 65a.10 For what purposes may grant funds be spent?

A grantee shall spend funds it receives under this part solely in accordance with the approved application and budget, the regulations of this part, the terms and conditions of the award, and the applicable cost principles prescribed in 45 CFR 74.27.

§ 65a.11 Other HHS regulations and policies that apply.

Several other HHS regulations and policies apply to awards under this part. These include but are not necessarily limited to:

42 CFR part 50, subpart A—Responsibility of PHS awardee and applicant institutions for dealing with and reporting possible misconduct in science

42 CFR part 50, subpart D—Public Health Service grant appeals procedure

42 CFR part 50, subpart F—Responsibility of applicants for promoting objectivity in research for which PHS funding is sought

42 CFR part 52h—Scientific peer review of research grant applications and research and development contract projects

45 CFR part 16—Procedures of the Departmental Grant Appeals Board

45 CFR part 46—Protection of human subjects

45 CFR part 74—Uniform administrative requirements for awards and subawards to institutions of higher education, hospitals, other nonprofit organizations, and commercial organizations; and certain grants and agreements with states, local governments and Indian tribal governments

45 CFR part 75—Informal grant appeals procedures

45 CFR part 76—Governmentwide debarment and suspension (nonprocurement) and governmentwide requirements for drug-free workplace (grants)

45 CFR part 80—Nondiscrimination under programs receiving Federal assistance through the Department of Health and Human Services effectuation of title VI of the Civil Rights Act of 1964

45 CFR part 81—Practice and procedure for hearings under part 80 of this title

45 CFR part 84—Nondiscrimination on the basis of handicap in programs and activities receiving Federal financial assistance

45 CFR part 86—Nondiscrimination on the basis of sex in education programs and activities receiving or benefiting from Federal financial assistance

45 CFR part 91—Nondiscrimination on the basis of age in HHS programs or activities receiving Federal financial assistance
45 CFR part 92—Uniform administrative requirements for grants and cooperative agreements to state and local governments
45 CFR part 93—New restrictions on lobbying
59 FR 14508 (March 28, 1994)—NIH Guidelines on the Inclusion of Women and Minorities as Subjects in Clinical Research

[NOTE: This policy is subject to change, and interested persons should contact the Office of Research on Women's Health, NIH, Room 201, Building 1, MSC 0161, Bethesda, MD 20892–0161 (301–402–1770; not a toll-free number) to obtain references to the current version and any amendments.]

59 FR 34496 (July 5, 1994)—NIH Guidelines for Research Involving Recombinant DNA Molecules.

NOTE: This policy is subject to change, and interested persons should contact the Office of Recombinant DNA Activities, NIH, Suite 323, 6000 Executive Boulevard, MSC 7010, Bethesda, MD 20892–7010 (301–496–9838; not a toll-free number) to obtain references to the current version and any amendments.]

''PHS Grants Policy Statement,'' DHHS Publication No. (OASH) 94–50,000 (Revised April 1, 1994), as amended by Addendum, dated January 24, 1995.

NOTE: This policy is subject to change, and interested persons should contact the Extramural Outreach and Information Resources Office (EOIRO), Office of Extramural Research, 6701 Rockledge Drive, Room 6208, MSC 7910, Bethesda, MD 20892–7910 (301–435–0714; not a toll-free number) to obtain references to the current version and any amendments. Information may also be obtained by contacting the EOIRO via its e-mail address (asknih@odrockm1.od.nih.gov) and by browsing the NIH Home Page site on the World Wide Web (http://www.nih.gov).]

''Public Health service Policy on Humane Care and Use of Laboratory animals,'' Office for Protection from Research Risks, HIH (Revised September 1986).

NOTE: This policy is subject to change, and interested persons should contact the Office for Protection for Research Risks, NIH, Suite 3B01, 6100 Executive Boulevard, MSC 7507, Rockville, MD 20852–7507 (301–496–7005; not a toll-free number) to obtain references to the current version and any amendments.]

PART 66—NATIONAL RESEARCH SERVICE AWARDS

Subpart A—Direct Awards

Sec.
66.101 Applicability.
66.102 Definitions.
66.103 Eligibility.
66.104 Application.
66.105 Requirements.
66.106 Awards.
66.107 Payments to awardees.
66.108 Payments to institutions.
66.109 Termination.
66.110 Service, payback, and recovery requirements.
66.111 Suspension, waiver, and cancellation.
66.112 Other HHS regulations that apply.
66.113 Publications.
66.114 Copyright.
66.115 Additional conditions.

Subpart B—Institutional Grants

66.201 Applicability.
66.202 Definitions.
66.203 Eligibility.
66.204 Application.
66.205 Requirements.
66.206 Grant awards.
66.207 Other HHS regulations and policies that apply.
66.208 Additional conditions.

AUTHORITY: Sec. 215, 58 Stat. 690, as amended (42 U.S.C 216); sec. 472, 88 Stat. 342 (42 U.S.C. 289*l*–1).

SOURCE: 48 FR 24880, June 3, 1983, unless otherwise noted.

Subpart A—Direct Awards

§ 66.101 Applicability.

The regulations in this subpart apply to National Research Service Awards made by the Secretary to individuals for research, and training to undertake research, under section 472(a)(1)(A) of the Public Health Service Act, as amended [42 U.S.C. 289*l*–1(a)(1)(A)].

§ 66.102 Definitions.

As used in this subpart:

(a) *Act* means the Public Health Service Act, as amended.

(b) *Secretary* means the Secretary of Health and Human Services and any other officer or employee of the Department of Health and Human Services to whom the authority involved has been delegated.

(c) *Nonprofit* institution means a corporation or association in which no part of the net earnings inures or may lawfully inure to the benefit of any private shareholder or individual.

(d) *Award* means a National Research Service Award under section 472 of the Act (42 U.S.C. 289*l*–1).

(e) *Residency* means post-graduate training for doctors of medicine, osteopathy, dentistry, optometry, and podiatry, nurses, and other individuals providing health care directly to patients, in which the majority of the time is spent in non-research clinical training.

(f) *Noncitizen national of the United States* means a person who, though not a citizen of the United States, owes permanent allegiance to the United States [8 U.S.C. 1101(a) (22)].

(g) *Predoctoral training* means training at the post-baccalaureate level in a program leading to the award of a doctor of philosophy or science, or equivalent degree. For purposes of Awards under the Minority Access to Research Careers programs of the National Institute of General Medical Sciences and the Alcohol, Drug Abuse, and Mental Health Administration, *predoctoral training* also means training in a program leading to the award of a baccalaureate degree in science or equivalent degree.

(h) *Postdoctoral training* means training of individuals holding a doctor of philosophy, science, medicine, dentistry, osteopathy, optometry, podiatry, veterinary medicine, engineering, nursing sciences, public health, or equivalent degree.

§ 66.103 Eligibility.

To be eligible for a National Research Service Award an individual must:

(a) Be a citizen, noncitizen national of the United States, or lawfully admitted to the United States for permanent residence at the time of application; and

(b) Propose to engage on a full-time basis in research, or training to undertake research, in a program specified in section 472(a)(1)(A) of the Act.

§ 66.104 Application.

(a) Eligible individuals may apply for an Award using the form and by the dates the Secretary prescribes.

(b) In addition to any other pertinent information that the Secretary may require, each application shall detail:

(1) The applicant's educational background and other qualifications and experience, including previous academic and professional degrees;

(2) The subject area of the proposed research or training;

(3) The proposed period of Award:

(4) If the proposed period of Award would provide the individual with aggregate support in excess of five years at the predoctoral level or three years at the postdoctoral level, the justification for this request; and

(5) The availability of necessary resources facilities at the institution where the research or training would be conducted.

(Approved by the Office of Management and Budget under control number 0925–0002)

§ 66.105 Requirements.

The Secretary shall make an Award to an individual under this subpart only if:

(a) For any Award made for a period in excess of twelve months, other than an Award made for research training at the prebaccalaureate level, the individual has submitted to the Secretary a written assurance (in the manner the Secretary may prescribe) that he or she will satisfy the requirements of § 66.110;

(b) If the proposed research or training would take place at an institution other than one operated by the Public Health Service agencies listed in section 472(a)(1)(A) of the Act, the institution has submitted a written assurance (in the manner the Secretary may prescribe). The assurance shall indicate that:

(1) The applicant has been accepted to the institution for the purpose of engaging in the research or training for which an Award is being sought;

(2) The Award will not be used to support a residency; and

(3) In the event an Award is made the institution will make available to the applicant any resources and facilities described in the application as necessary to carry out the research or training; and

(c) The individual has submitted a written assurance (in the manner the Secretary may prescribe) that the Award to individuals will not be used to support a residency.

(Approved by the Office of Management and Budget under control number 0925–0002)

§ 66.106 Awards.

(a) Within the limits of funds available, the Secretary shall make Awards to those applicants:

(1) Who have satisfied the requirements of § 66.105; and

(2) Whose proposed research or training would, in the judgment of the Secretary, best promote the purposes of section 472(a)(1)(A) of the Act, taking into consideration among other pertinent factors:

(i) The scientific, technical, or educational merit of the particular proposal;

(ii) The availability of resources and facilities to carry it out;

(iii) The qualifications and experience of the applicant; and

(iv) The need for personnel in the subject area of the proposed research or training.

(b) In making Awards, the Secretary shall take account of the Nation's overall need for biomedical research by giving special consideration to physicians who agree to undertake a minimum of two years of biomedical research.

(c) All Awards shall be in writing. Each shall specify:

(1) The period of the Award;

(2) The total recommended stipends and allowances provided for the entire Award period;

(3) The amount awarded for the intitial year of that period (see § 66.107); and

(4) The amount of the payments to the institution for the cost of services provided the awardee by the institution during the initial year of that period (see § 66.108).

(d) Neither the approval of any application nor any Award shall commit or obligate the United States in any way to make additional, supplemental, continuation, or other Award with respect to any approved application or portion thereof.

(e) No individual may receive an aggregate of more than five years of support at the predoctoral level and three years at the postdoctoral level unless the Secretary waives, for good cause shown, this limitation for the individual. In determining what constitutes ''good cause,'' the Secretary shall take into account such factors as whether the applicant proposes to pursue a combined program leading to the degrees of doctor of medicine and doctor of philosophy.

§ 66.107 Payments to awardees.

(a) Individuals receiving Awards shall be entitled to the stipends, tuition, fees, and allowances the Secretary may designate, taking into account the cost of living, and such other factors as the needs of the program and the availability of funds.

(b) The Secretary shall pay stipends, tuition, fees and allowances to the awardee or the sponsoring institution for payment to the awardee.

§ 66.108 Payments to institutions.

The institution shall be entitled to an allowance to help defray the cost of support services (including the cost of faculty salaries, supplies, equipment, general research support, and related items) provided to the individual by the institution. The Secretary shall determine the amount of payments based upon reasonable costs to the institution of establishing and maintaining the quality of research and training programs for which it receives support under this subpart. The Secretary may make payments to the institution either in advance or by way of reimbursement.

§ 66.109 Termination.

(a) The Secretary may terminate an Award prior to its normal expiration date:

(1) At the written request of the awardee; or

(2) If the Secretary finds that the awardee has materially failed to comply with the terms and conditions of the Award or to carry out the purpose for which it was made.

(b) In the event an Award is terminated, the Secretary shall notify the awardee in writing of this determination, the reasons for termination, the effective date, and any procedural rights available.

§ 66.110 Service, payback, and recovery requirements.

(a) Each individual who receives an Award for more than twelve months

other than an Award for research training at the prebaccalaureate level shall upon completion of the Award engage for a period equal to the period of support (in excess of twelve months) in health research or teaching or, when in academic employment, any combination of research or teaching which is in accordance with the usual patterns of such employment.

(b) Except as provided in § 66.111, an individual subject to the requirements for service in paragraph (a) of this section must begin to undertake the service on a continuous basis within two years after the termination of his or her Award.

(c) If the individual fails to undertake or perform the service in accordance with the requirements of paragraph (a) of this section, the United States shall be entitled to recover from the individual an amount determined in accordance with the formula:

$$A = 0\frac{(t-s)}{(t)}$$

In which

A is the amount the United States is entitled to recover;

0 is the sum of the total amount paid under one or more Awards to the individual less the amount paid for the initial twelve months;

t is total number in months in the individual's sevice obligation;

and *s* is the number of months of the obligation served by him or her in accordance with paragraph (a) of this section.

(d) Except as provided in § 66.111, the individual shall pay to the United States any amount which it is entitled to recover under paragraph (c) within a three-year period beginning on the date the United States becomes entitled to recover that amount. Interest shall accrue to the United States until any amount due it under paragraph (c) of this section is paid. The rate of interest will be fixed by the Secretary of the Treasury after taking into consideration private consumer rates of interest prevailing on the date the United States become entitled to recovery.

[48 FR 24880, June 3, 1983; 48 FR 33710, July 25, 1983]

§ 66.111 Suspension, waiver, and cancellation.

(a) The Secretary may extend the period for undertaking service prescribed in § 66.110(d), permit breaks in service under § 66.110(b), or extend the period of repayment under § 66.110(d) if the Secretary determines that:

(1) An extension or break in service is necessary so the individual may complete his or her research training;

(2) Completion during the period would be impossible because the individual is temporarily disabled; or

(3) Completion during the period would involve a substantial hardship to the individual and failure to extend to the period would be against equity and good conscience.

(b) The Secretary may waive, in whole or in part, the obligation of the individual to repay pursuant to § 66.110(c) if the Secretary determines that:

(1) Fulfillment would be impossible because the individual is permanently and totally disabled; or

(2) Fulfillment would involve a substantial hardship to the individual and enforcement of the obligation would be against equity and good conscience.

(c) In making determinations under § 66.111 (a)(3) and (b)(2), the Secretary will take into consideration such factors as:

(1) The individual's present financial resources and obligations;

(2) The individual's estimated future financial resources and obligations;

(3) The reasons for the individual's failure to complete the requirements within the prescribed period, such as problems of a personal nature;

(4) The extent to which the individual has been engaged in activities encompassed by § 66.110(a);

(5) Whether the individual has received sufficient training to be qualified to perform any such activities;

(6) The unavailability of employment opportunities appropriate to the individual's education and training; and

(7) Any other extenuating circumstances.

(d) Any obligations of any individual under this subpart will be cancelled upon the death of that individual.

[48 FR 24880, June 3, 1983; 48 FR 33710, July 25, 1983]

§ 66.112 Other HHS regulations that apply.

Several other regulations and policies may apply to individuals and institutions receiving payments under this subpart. These include, but are not limited to:

45 CFR parts 6 and 8—Inventions and patents
45 CFR part 46—Protection of human subjects
45 CFR part 76—Debarment and suspension from eligibility for financial assistance
45 CFR part 80—Nondiscrimination under programs receiving Federal assistance through the Department of Health and Human Services effectuation of title VI of the Civil Rights Act of 1964
45 CFR part 81—Practice and procedure for hearings under part 80 of this Title
45 CFR part 84—Nondiscrimination on the basis of handicap in programs and activities receiving or benefiting from Federal financial assistance
45 CFR part 86—Nondiscrimination on the basis of sex in education programs and activities receiving or benefiting from Federal financial assistance
45 CFR part 91—Nondiscrimination on the basis of age in HHS programs or activities receiving Federal financial assistance
48 FR 24556—Guidelines for Research Involving Recombinant DNA Molecules published by the National Institutes of Health

[49 FR 38116, Sept. 27, 1984]

§ 66.113 Publications.

Publication, distribution, and disposition of all manuscripts and other materials resulting from an Award shall be subject to the conditions that all such materials shall bear appropriate acknowledgement of Department of Health and Human Services support and that the awardee shall furnish copies of these manuscripts or other materials as the Secretary may reasonably request.

§ 66.114 Copyright.

Where the work accomplished under an Award results in a book or other copyrightable material, the author is free to copyright the work, but the United States reserves a royalty-free, nonexclusive, and irrevocable license to reproduce, publish, or otherwise use, and to authorize others to use, all copyrightable or copyrighted material resulting from the Award.

§ 66.115 Additional conditions.

The Secretary may with respect to any Award or class of Awards impose additional conditions prior to or at the time of any Award when in the Secretary's judgment such conditions are necessary to assure the carrying out of the purposes of the Award, the interests of the public health, or the conservation of funds awarded.

Subpart B—Institutional Grants

§ 66.201 Applicability.

The regulations in this subpart apply to grants under section 472(a)(1)(B) of the Public Health Service Act, as amended [42 U.S.C. 289*1* –1(a)(1)(B)], to public institutions and to nonprofit private institutions to enable these institutions to make National Research Service Awards to individuals for research, and training to undertake research, in programs specified in section 472(a)(1)(B) of the Act.

§ 66.202 Definitions.

The definitions in § 66.102 of subpart A of this part apply to this subpart.

[48 FR 24880, June 3, 1983; 48 FR 33710, July 25, 1983]

§ 66.203 Eligibility.

To be eligible for a grant under this subpart, an applicant must be:

(a) A public or nonprofit private institution; and

(b) Located in a State, the District of Columbia, Puerto Rico, the Virgin Islands, the Canal Zone, Guam, American Samoa, or the Trust Territory of the Pacific Islands.

§ 66.204 Application.

(a) Application for a grant under this subpart shall be made on a form approved for that purpose by the Secretary. Applicants shall submit completed forms on or before the dates the Secretary may prescribe.

(b) In addition to any other pertinent information that the Secretary may require, each application shall set forth in detail:

(1) The subject area or areas in which the proposed research or training will be conducted;

(2) The resources and facilities available for use by recipients of Awards in carrying out this research or training;

(3) The names, qualifications, and experience of the program director and principal staff members who will be responsible for the proposed program;

(4) The criteria to be employed in selecting recipients of Awards;

(5) The estimated number of recipients of Awards under the grant;

(6) The proposed project period and a detailed budget and justification for the amount of grant funds requested; and

(7) Proposed methods for monitoring and evaluating the performance of individual recipients of Awards, as well as the overall program.

(Approved by the Office of Management and Budget under control number 0925–0022)

§ 66.205 Requirements.

(a) No Award shall be made to an individual from a grant under this subpart unless:

(1) For any Award made for a period in excess of twelve months, other than an Award made for research training at the baccalaureate level, the individual has submitted to the Secretary a written assurance (in the manner the Secretary may prescribe) that he or she will satisfy the requirements of § 66.110 of subpart A of this part;

(2) The individual is a citizen or noncitizen national of the United States or has been lawfully admitted to the United States for permanent residence at the time of application;

(3) The Award includes a provision for termination in the event the recipient is found by the institution to have materially failed to comply with the terms and conditions of the Award or to carry out the purpose for which it was made; and

(4) The Award is not to be used to support a residency.

(b) No Award shall be made to an individual under such grant which would provide that individual with aggregate support in excess of five years for predoctoral training and three years for postdoctoral training, unless the Secretary for good cause shown as provided in § 66.106(d) of subpart A of this part, waives the application of the limitation with respect to that individual.

(c) The provisions of §§ 66.110 and 66.111 of subpart A of this part constitute terms and conditions of any Award made from a grant under this subpart.

(Approved by the Office of Management and Budget under control number 0925–0022)

[48 FR 24880, June 3, 1983; 48 FR 33710, July 25, 1983]

§ 66.206 Grant awards.

(a) Within the limits of funds available, the Secretary shall award grants to those applicants:

(1) Whose applications have been reviewed and recommended for approval by the appropriate national advisory council or board;

(2) Who have satisfied the requirements of § 66.105; and

(3) Whose proposed programs would, in the judgment of the Secretary, best promote the purposes of section 472(a)(1)(B) of the Act, taking into consideration among other pertinent factors:

(i) The scientific, technical, or educational merit of the proposed program;

(ii) The adequacy of the resources and facilities available to the applicant;

(iii) The qualifications and experience of the program director and principal staff members;

(iv) The degree of the need for personnel in the subject area or areas of the proposed research or training;

(v) The extent to which the applicant, in making Awards, gives special consideration to physicians who agree to undertake a minimum of two years of biomedical research;

(vi) The administrative and management capability of the applicant;

(vii) The reasonableness of the proposed budget in relation to the proposed program; and

(viii) The adequacy of the methods for monitoring and evaluating the performance of individual recipients and the overall program.

(b) The notice of grant award specifies how long HHS intends to support the project without requiring the project to recompete for funds. This period, called the project period, will usually be for 3–5 years.

(c) Generally the grant will initially be for one year and subsequent continuation awards will also be for one year at a time. A grantee must submit a separate application to have the support continued for each subsequent year. Decisions regarding continuation awards and the funding level of such awards will be made after consideration of such factors as the grantee's progress and management practices, and the availability of funds. In all cases, continuation awards require a determination by HHS that continued funding is in the best interest of the government.

(d) Neither the approval of any application nor the award of any grant commits or obligates the United States in any way to make any additional, supplemental, continuation, or other award with respect to any approved application or portion of any approved application.

§ 66.207 Other HHS regulations and policies that apply.

Several other regulations and policies apply to grants under this subpart. These include, but are not limited to:

42 CFR part 50, subpart D—Public Health Service grant appeals procedure
45 CFR part 16—Procedures of the Departmental Grant Appeals Board
45 CFR part 46—Protection of human subjects
45 CFR part 74—Administration of grants
45 CFR part 75—Informal grant appeals procedures
45 CFR part 76—Debarment and suspension from eligibility for financial assistance
45 CFR part 80—Nondiscrimination under programs receiving Federal assistance through the Department of Health and Human Services effectuation of title VI of the Civil Rights Act of 1964
45 CFR part 81—Practice and procedure for hearings under part 80 of this title
45 CFR part 84—Nondiscrimination on the basis of handicap in programs and activities receiving or benefiting from Federal financial assistance
45 CFR part 86—Nondiscrimination on the basis of sex in education programs and activities receiving or benefiting from Federal financial assistance
45 CFR part 91—Nondiscrimination on the basis of age in HHS programs or activities receiving Federal financial assistance
48 FR 24556—Guidelines for Research Involving Recombinant DNA Molecules published by the National Institutes of Health

[49 FR 38116, Sept. 27, 1984]

§ 66.208 Additional conditions.

The Secretary may, with respect to any grant award, impose additional conditions prior to or at the time of any award when in the Secretary's judgment those conditions are necessary to assure or protect advancement of the approved program, the interests of the public health, or the conservation of grant funds.

PART 67—AGENCY FOR HEALTH CARE POLICY AND RESEARCH GRANTS AND CONTRACTS

Subpart A—Research Grants for Health Services Research, Evaluation, Demonstration, and Dissemination Projects

Sec.
67.10 Purpose and scope.
67.11 Definitions.
67.12 Eligible applicants.
67.13 Eligible projects.
67.14 Application.
67.15 Peer review of applications.
67.16 Evaluation and disposition of applications.
67.17 Grant award.
67.18 Use of project funds.
67.19 Other applicable regulations.
67.20 Confidentiality.
67.21 Control of data and availability of publications.
67.22 Additional conditions.

Subpart B—Peer Review of Contracts for Health Services Research, Evaluation, Demonstration, and Dissemination Projects

67.101 Purpose and scope.
67.102 Definitions.
67.103 Peer review of contract proposals.
67.104 Confidentiality.
67.105 Control of data and availability of publications.

AUTHORITY: Pub. L. 103–43, 107 Stat. 214–215, Pub. L. 102–410, 106 Stat. 2094–2101 and sec. 6103, Pub. L. 101–239, 103 Stat. 2189–2208, Title IX of the Public Health Service Act (42 U.S.C. 299–299c–6); and sec. 1142, Social Security Act (42 U.S.C. 1320b–12).

SOURCE: 62 FR 12908, Mar. 18, 1997, unless otherwise noted.

Subpart A—Research Grants for Health Services Research, Evaluation, Demonstration, and Dissemination Projects

§ 67.10 Purpose and scope.

The regulations of this subpart apply to the award by AHCPR of grants and cooperative agreements under:

(a) Title IX of the Public Health Service Act to support research, evaluation, demonstration, and dissemination projects, including conferences, on health care services and systems for the delivery of such services, as well as to establish and operate multidisciplinary health services research centers.

(b) Section 1142 of the Social Security Act to support research on the outcomes, effectiveness, and appropriateness of health care services and procedures, including but not limited to, evaluations of alternative services and procedures; projects to improve methods and data bases for outcomes, effectiveness, and other research; dissemination of research information and clinical guidelines, conferences, and research on dissemination methods.

§ 67.11 Definitions.

As used in this subpart—

Administrator means the Administrator and any other officer or employee of the Agency for Health Care Policy and Research to whom the authority involved may be delegated.

Agency for Health Care Policy and Research (AHCPR) means that unit of the Department of Health and Human Services established by section 901 of the Public Health Service Act.

Direct costs means the costs that can be identified specifically with a particular cost objective, such as compensation of employees for the time and effort devoted specifically to the approved project, and the costs of materials acquired, consumed, or expended specifically for the purpose of the approved project.

Grant means an award of financial assistance as defined in 45 CFR parts 74 and 92, including cooperative agreements.

Grantee means the organizational entity or individual to which a grant, including a cooperative agreement, under Title IX of the Public Health Service Act or section 1142 of the Social Security Act and this subpart is awarded and which is responsible and accountable both for the use of the funds provided and for the performance of the grant-supported project or activities. The grantee is the entire legal entity even if only a particular component is designated in the award document.

Nonprofit as applied to a private entity, means that no part of the net earnings of such entity inures or may lawfully inure to the benefit of any shareholder or individual.

Peer review group means a panel of experts, established under section 922(c) of the PHS Act, who by virtue of their training or experience are eminently qualified to carry out the duties of such peer review group as set out in this subpart. Officers and employees of the United States may not constitute more than 25 percent of the membership of any such group under this subpart.

PHS Act means the Public Health Service Act, as amended.

Principal investigator means a single individual, designated in the grant application and approved by the Administrator, who is responsible for the scientific and technical direction of the project.

Social Security Act means the Social Security Act, as amended.

§ 67.12 Eligible applicants.

Any public or nonprofit private entity or any individual is eligible to apply for a grant under this subpart.

§ 67.13 Eligible projects.

Projects for research, evaluations, demonstrations, dissemination of information (including research on dissemination), and conferences, related to health care services and the delivery of such services, are eligible for grant support. These include, but are not limited to, projects in the following categories:

(a) Effectiveness, efficiency, and quality of health care services;

(b) Outcomes of health care services and procedures;

(c) Clinical practice, including primary care and practice-oriented research;

(d) Health care technologies, facilities, and equipment, including assessments of health care technologies and innovative approaches to such assessments, and technology diffusion;

(e) Health care costs and financing, productivity, and market forces;

(f) Health promotion and disease prevention;

(g) Health statistics and epidemiology;

(h) Medical liability;

(i) AID/HIV infection, particularly with respect to issues of access and delivery of health care services;

(j) Rural health services;

(k) The health of low-income, minority, elderly, and other underserved populations, including women and children; and

(l) Information dissemination and research on dissemination methodologies, directed to health care providers, practitioners, consumers, educators, review organizations, and others.

§67.14 Application

(a) To apply for a grant, an entity or individual must submit an application in the form and at the time that the Administrator requires. The application must be signed by an individual authorized to act for the applicant and to assume on behalf of the applicant the obligations imposed by the PHS Act and the Social Security Act, as pertinent, the regulations of this subpart, and any additional terms or conditions of any grant awarded.

(b) In addition to information requested on the application form, the applicant must provide such other information as the Administrator may request.

§67.15 Peer review of applications.

(a) *General procedures for peer review.* (1) All applications for support under this subpart will be submitted by the Administrator for review to a peer review group, in accordance with section 922(a) of the PHS Act, except that applications eligible for review under section 922(d)(2) of the PHS Act (''small grants'') may be reviewed under adjusted procedures in accordance with paragraph (b) of this section.

(2) Members of the peer review group will be selected based upon their training and experience in relevant scientific and technical fields, taking into account, among other factors:

(i) The level of formal education (e.g., M.A., Ph.D., M.D., D.N.Sc.) completed by the individual and/or the individual's pertinent experience and expertise;

(ii) The extent to which the individual has engaged in relevant research, the capacities (e.g., principal investigator, assistant) in which the individual has done so, and the quality of such research;

(iii) The extent of the professional recognition received by the individual as reflected by awards and other honors received from scientific and professional organizations outside the Department of Health and Human Services;

(iv) The need of the peer review group to include within its membership experts representing various areas of specialization within relevant scientific and technical fields, or specific health care issues; and

(v) Appropriate representation based on gender, racial/ethnic origin, and geography.

(3) Review by the peer review group under paragraph (a) of this section is conducted by using the criteria set out in paragraph (c) of this section.

(4) The peer review group to which an application has been submitted under paragraph (a) of this section shall make a written report to the Administrator on each application, which shall contain the following parts:

(i) The first part of the report shall consist of a factual summary of the proposed project, including a description of its purpose, scientific approach, location, and total budget.

(ii) The second part of the report shall address the scientific and technical merit of the proposed project with a critique of the proposed project with regard to the factors described in paragraphs (c)(1)(i) through (c)(1)(x) or (c)(2)(i) through (c)(2)(vii) of this section as applicable. This portion of the report shall include a set of recommendations to the Administrator

with respect to the disposition of the application based upon its scientific and technical merit. The peer review panel may recommend to the Administrator that an application:

(A) Be given consideration for funding,

(B) Be deferred for a later decision, pending receipt of additional information, or

(C) Not be given further consideration.

(iii) For each application recommended for further consideration by the Administrator, the report shall also provide a priority score based on the scientific and technical merit of the proposed project, and make recommendations on the appropriate project period and level of support. The report may also address, as applicable, the degree to which the proposed project relates to AHCPR-announced priorities.

(b) *Procedural adjustments for small grants.* (1) The Administrator may make adjustments in the peer review procedures established in accordance with paragraph (a) of this section for grant applications with total direct costs that do not exceed the amount specified in section 922(d)(2) of the PHS Act, hereafter referred to as ''small grants.''

(2) Non-Federal and Federal experts will be selected by the Administrator for the review of small grant applications on the basis of their training and experience in particular scientific and technical fields, their knowledge of health services research and the application of research findings, and their special knowledge of the issue(s) being addressed or methods and technology being used in the specific proposal.

(3) Review of applications for small grants may be by a review group established in accordance with paragraph (a) of this section, or by individual field readers, or by an ad hoc group of reviewers.

(4) The review criteria set forth in paragraph (c) of this section shall be used for the review of small grant applications.

(5) Each reviewer or group of reviewers to whom an application has been submitted under paragraph (b) of this section shall make a written report to the Administrator on each application. Each report shall summarize the findings of the review and provide a recommendation to the Administrator on whether the application should be given further consideration. For applications recommended for further consideration, the report may also address, as applicable, the degree to which the proposed project relates to AHCPR-announced priorities.

(c) *Review criteria.* The review criteria set out in this paragraph apply to both applications reviewed by peer review panels in accordance with paragraph (a) of this section, and applications for small grants reviewed in accordance with paragraph (b) of this section.

(1) *General review criteria.* In carrying out a review under this section for grants (other than conference grants), the following review criteria will be taken into account, where appropriate:

(i) The significance and originality from a scientific or technical standpoint of the goals of the project;

(ii) The adequacy of the methodology proposed to carry out the project;

(iii) The availability of data or the adequacy of the proposed plan to collect data required in the analyses;

(iv) The adequacy and appropriateness of the plan for organizing and carrying out the project;

(v) The qualifications and experience of the principal investigator and proposed staff;

(vi) The reasonableness of the budget and the time frame for the project, in relation to the work proposed;

(vii) The adequacy of the facilities and resources available to the grantee;

(viii) The extent to which women and minorities are adequately represented in study populations;

(ix) Where an application involves activities which could have an adverse effect upon humans, animals, or the environment, the adequacy of the proposed means for protecting against or minimizing such effects; and

(x) Any additional criteria that may be announced by the Administrator from time to time for specific categories of grant applications (e.g., proposed projects for support of research centers) eligible for support under this subpart.

(xi) In addition to the scientific and technical criteria above, peer reviewers may be asked to consider the degree to which a proposed project addresses any special AHCPR priorities that have been announced by the Administrator, as applicable.

(2) *Review criteria for conference grants.* In carrying out reviews of conference grants under paragraphs (a) and (b) of this section, the following review criteria will be taken into account, as appropriate:

(i) The significance of the proposed conference, specifically the importance of the issue or problem being addressed, including methodological or technical issues for dealing with the development, conduct, or use of health services research;

(ii) The qualifications of the staff involved in planning and managing the conference;

(iii) The adequacy of the facilities and other resources available for the conference;

(iv) the appropriateness of the proposed budget, including other sources of funding;

(v) The extent to which the health concerns of women and minorities will be addressed in the conference topic(s), as appropriate;

(vi) The plan for evaluating and disseminating the results of the conference; and

(vii) Any additional criteria that may be announced by the Administrator.

(viii) In addition to the scientific and technical criteria above, peer reviewers may be asked to consider the degree to which a proposed project addresses any special AHCPR priorities that have been announced by the Administrator, as appropriate.

(d) *Conflict of interest.* (1) Members of peer review groups will be screened for potential conflicts of interest prior to appointment and will be required to follow Department policies and procedures consistent with the Standards of Ethical Conduct for Employees of the Executive Branch (5 CFR part 2635), Executive Order 12674 (as modified by Executive Order 12731).

(2) In addition to any restrictions referenced under paragraph (d)(1) of this section:

(i) No member of a peer review group (or individual reviewer) may participate in or be present during any review by such group of a grant application in which, to the member's knowledge, any of the following has a financial interest:

(A) The member or his or her spouse, minor child, or partner;

(B) Any organization in which the member is serving as an officer, director, trustee, general partner, or employee; or

(C) Any organization with which the member is negotiating or has any arrangement concerning prospective employment or other similar association, and further;

(ii) In the event that any member of a peer review group or his or her spouse, parent, child, or partner is currently or expected to be the principal investigator or member of the staff responsible for carrying out any research or development activities contemplated as part of a grant application, that member of the group, or the group, may be disqualified from the review and the review conducted by another group with the expertise to do so. An ad hoc group selected in accordance with §67.15(a), or §67.15(b) as applicable, may also be used for the review. Any individual reviewer to whom the conditions of this paragraph apply would also be disqualified as a reviewer.

(iii) No member of a peer review group or individual may participate in any review under this subpart of a specific grant application for which the member has had or is expected to have any other responsibility or involvement (whether preaward or postaward) as an officer or employee of the United States.

(3) Where permissible under the standards and order(s) cited in paragraph (d)(1) of this section, the Administrator may waive the requirements in paragraph (d)(2) of this section if it is determined that there is no other practical means for securing appropriate expert advice on a particular grant application.

[62 FR 12909, Mar. 18, 1997, as amended at 62 FR 37124, July 10, 1997]

§ 67.16 Evaluation and disposition of application.

(a) *Evaluation*. After appropriate peer review in accordance with § 67.15, the Administrator will evaluate applications recommended for further consideration, taking into account, among other factors:

(1) The degree to which the purposes of Title IX of the PHS Act and section 1142 of the Social Security Act, as applicable, are being addressed;

(2) Recommendations made by reviewers pursuant to § 67.15;

(3) Any recommendations made by the National Advisory Council for Health Care Policy, Research, and Evaluation, as applicable;

(4) The appropriateness of the budget;

(5) The extent to which the research proposal and the fiscal plan provide assurance that effective use will be made of grant funds;

(6) The demonstrated business management capability of the applicant;

(7) The demonstrated competence and skill of the staff, especially the senior personnel, in light of the scope of the project;

(8) The probable usefulness of the results of the project for dealing with national health care issues, policies, and programs; and

(9) The degree to which AHCPR-announced priorities or purposes are being addressed.

(b) *Disposition*. On the basis of the evaluation of the application as provided in paragraph (a) of this section, the Administrator shall: give consideration for funding, defer for a later decision, pending receipt of additional information, or give no further consideration for funding, to any application for a grant under this subpart; except that the Administrator may not fund an application which has not been recommended for further consideration as a result of peer review in accordance with § 67.15. A recommendation against further consideration shall not preclude reconsideration, if the application is revised, responding to issues and questions raised during the review, and resubmitted for peer review at a later date.

§ 67.17 Grant award.

(a) Within the limits of available funds, the Administrator may award grants to those applicants whose projects are being considered for funding, which in the judgment of the Administrator, will promote best the purposes of Title IX of the PHS Act and (if applicable) section 1142 of the Social Security Act, AHCPR priorities, and the regulations of this subpart.

(b) The Notice of Grant Award specifies how long the Administrator intends to support the project without requiring the project to recompete for funds. This period, called the project period, will usually be for 3–5 years, except for small grants, which usually are 1 year awards. The project period as specified in the Notice of Grant Award shall begin no later than 9 months following the date of the award, except that the project period must begin in the same fiscal year as that from which funds are being awarded.

(c) Upon request from the grantee, Department grants policy permits an extension of the project period for up to 12 months, without additional funds, when more time is needed to complete the research. The Administrator may approve a request for an additional extension of time based on unusual circumstances with written justification submitted by the grantee, prior to the completion of the project period. In no case will an additional extension of more than 12 months be approved.

(d) Generally, a grant award will be for 1 year, and subsequent continuation awards will be for 1 year at a time. A grantee must submit a separate continuation application to have the support continued for each subsequent year. Decisions regarding continuation awards and the funding level of such awards will be made after consideration of such factors as the grantee's progress and management practices and the availability of funds. In all cases, continuation awards require a determination by the Administrator that continuation is in the best interest of the Federal Government.

(e) Neither the approval of any application nor the award of any grant commits or obligates the Federal Government in any way to make any additional, supplemental, continuation, or other award with respect to any approved application.

(f) *Small grants.* For particular categories of small grants, such as dissertation research support, the Administrator may establish a limit on total direct costs to be awarded. Any categorical limits will be announced in advance of the deadline for receipt of applications for such small grants.

(g) *Supplemental awards.* (1) Except for small grants, supplemental awards that would exceed 20 percent of the AHCPR approved direct costs of the project during the project period, or that request an increase in funds to support a change or a significant expansion of the scope of the project, will be reviewed as competing supplemental grants in accordance with §67.15(a). A supplemental award for preparation of data in suitable form for transmittal in accordance with §67.21 shall be excluded from the 20 percent aggregate.

(2) In the case of small grants, as defined in section 922(d)(2) of the PHS Act, the Administrator will not approve a supplemental award during the project period (excluding any supplemental award for preparation of data in suitable form for transmittal in accordance with §67.21) that will, in the aggregate, exceed 10 percent of the AHCPR approved direct costs of the project.

(h) *Noncompeting continuation awards.* Each project with a project period in excess of 2 years and with direct costs over the project period in excess of the amount specified in section 922(d)(2) may be reviewed during the second budget period and during each subsequent budget period by at least two members of the peer review group that reviewed the initial application, or individuals who participated in that review, to the extent practicable. Recommendations to the Administrator for continuation support will be based upon evaluation of:

(1) The progress of the project in meeting project objectives;

(2) The appropriateness of the management of the project and allocation of resources within the project;

(3) The adequacy and appropriateness of the plan for carrying out the project during the budget period in light of the accomplishments during previous budget periods; and

(4) The reasonableness of the proposed budget for the subsequent budget period.

§67.18 Use of project funds.

Grant funds must be spent solely for carrying out the approved project in accordance with Title IX of PHS Act, section 1142 of the Social Security Act (if applicable), the regulations of this subpart, the terms and conditions of the award, and the provisions of 45 CFR part 74, or part 92 for State and local government grantees.

§67.19 Other applicable regulations.

Several other regulations apply to grants under this subpart. These include, but are not limited to:

37 CFR part 401—Inventions and patents

42 CFR part 50 subpart A—Responsibility of PHS awardee and applicant institutions for dealing with and reporting possible misconduct in science

42 CFR part 50 subpart D—Public Health Service grant appeals procedure

42 CFR part 50 subpart F—Responsibility of applicants for promoting objectivity in research for which PHS funding is sought

45 CFR part 16—Procedures of the departmental grant appeals board

45 CFR part 46—Protection of human subjects

45 CFR part 74—Administration of grants

45 CFR part 76—Governmentwide debarment and suspension (nonprocurement) and governmentwide requirements for drug-free workplace (grants)

45 CFR part 80—Nondiscrimination under programs receiving Federal assistance through the Department of Health and Human Services effectuation of Title VI of the Civil Rights Act of 1964

45 CFR part 81—Practice and procedure for hearings under Part 80 of this title

45 CFR part 84—Nondiscrimination on the basis of handicap in programs and activities receiving or benefiting from Federal financial assistance

45 CFR part 86—Nondiscrimination on the basis of sex in education programs and activities receiving or benefiting from Federal financial assistance

45 CFR part 91—Nondiscrimination on the basis of age in DHHS programs or activities receiving Federal financial assistance
45 CFR part 92—Uniform administrative requirements for grants and cooperative agreements with State and local governments
45 CFR part 93—New restrictions on lobbying

§ 67.20 Confidentiality.

The confidentiality of identifying information obtained in the course of conducting or supporting grant and cooperative agreement activities under this subpart is protected by section 903(c) of the PHS Act. Specifically:

(a) No information obtained in the course of conducting or supporting grant and cooperative agreement activities under this subpart, if the entity or individual supplying the information or described in it is identifiable, may be used for any purpose other than the purpose for which it was supplied, unless the identifiable entity or individual supplying the information or described in it has consented to such other use, in the recorded form and manner as the Administrator may require; and

(b) No information obtained in the course of grant and cooperative agreement activities conducted or supported under this subpart maybe published or released in other form if the individual who supplied the information or who is described in it is identifiable, unless such individual has consented, in the recorded form and manner as the Administrator may require, to such publication or release.

§ 67.21 Control of data and availability of publications.

Except as otherwise provided in the terms and conditions of the award and subject to the confidentiality requirements of section 903(c) of the PHS Act, section 1142(d) of the Social Security Act, and § 67.20 of this subpart:

(a) All data collected or assembled for the purpose of carrying out health services research, evaluation, demonstration, or dissemination projects supported under this subpart shall be made available to the Administrator, upon request:

(b) All publications, reports, papers, statistics, or other materials developed from work supported, in whole or in part, by an award made under this subpart must be submitted to the Administrator in a timely manner. All such publications must include an acknowledgement that such materials are the results of, or describe, a grant activity supported by AHCPR;

(c) The AHCPR retains a royalty-free, non-exclusive, and irrevocable license to reproduce, publish, use, or disseminate any copyrightable material developed in the course of or under a grant for any purpose consistent with AHCPR's statutory responsibilities, and to authorize others to do so for the accomplishment of AHCPR purposes; and

(d) Except for identifying information protected by section 903(c) of the PHS Act, the Administrator, as appropriate, will make information obtained with AHCPR grant support available, and arrange for dissemination of such information and material on as broad a basis as practicable and in such form as to make them as useful as possible to a variety of audiences, including health care providers, practitioners, consumers, educators, and policymakers.

§ 67.22 Additional conditions.

The Administrator may, with respect to any grant awarded under this subpart, impose additional conditions prior to or at the time of any award when in the Administrator's judgment such conditions are necessary to assure or protect advancement of the approved project, the interest of the public health, or the conservation of grant funds.

Subpart B—Peer Review of Contracts for Health Services Research, Evaluation, Demonstration, and Dissemination Projects

§ 67.101 Purpose and scope.

(a) The regulations of this subpart apply to the peer review of contracts under:

(1) Title IX of the Public Health Service Act to support research, evaluation, demonstration, and dissemination projects, including conferences, on health care services and systems for

the delivery of such services; and development of clinical practice guidelines, quality standards, performance measures, and review criteria.

(2) Section 1142 of the Social Security Act to support research on the outcomes, effectiveness, and appropriateness of health care services and procedures, including, but not limited to, evaluations of alternative services and procedures; projects to improve methods and data bases for outcomes and effectiveness research; dissemination of research information and clinical practice guidelines, as well as quality standards, performance measures, and review criteria; conferences; and research on dissemination methods.

(b) The regulations of this subpart also contain provisions respecting confidentiality of research data, control of data, and availability of information.

§ 67.102 Definitions.

Contract proposal means a written offer to enter into a contract submitted to a contracting officer by an individual or non-Federal organization, and including at a minimum a description of the nature, purpose, duration, cost of project and methods, personnel, and facilities to be utilized in carrying out the requirements of the contract.

Peer review group means a panel of experts, as required by section 922(c) of the PHS Act, established to conduct technical and scientific review of contract proposals and to make recommendations to the Administrator regarding the merits of such proposals.

Request for proposals means a Government solicitation to prospective offerors, under procedures for negotiated contracts, to submit a proposal to fulfill specific agency requirements based on terms and conditions defined in the solicitation. The solicitation contains information sufficient to enable all offerors to prepare competitive proposals, and is as complete as possible with respect to: The nature of work to be performed; descriptions and specifications of items to be delivered; performance schedule; special requirements, clauses or other circumstances affecting the contract; and criteria by which the proposals will be evaluated.

§ 67.103 Peer review of contract proposals.

(a) All contract proposals for AHCPR support will be submitted by the Administrator for review to a peer review group, as required in section 922(a) of the PHS Act. Proposals will be reviewed in accordance with the Federal Acquisition Regulations and the Health and Human Services Acquisition Regulations (48 CFR Ch. I and III) and the requirements of the pertinent Request for Proposal.

(b) *Establishment of peer review groups.* In accordance with section 922(c) of the PHS Act, the Administrator shall establish such peer review groups as may be necessary to review all contract proposals submitted to AHCPR.

(c) *Composition of peer review groups.* The peer review groups shall be composed of individuals, in accordance with section 922(c) of the PHS Act, as amended, who by virtue of their training or experience are eminently qualified to carry out the duties of such a peer review group. Officers and employees of the United States may not constitute more than 25 percent of the membership of any such group. Members of the peer review group will be selected based upon their training or experience in relevant scientific and technical fields, taking into account, among other factors:

(1) The level of formal education (e.g., M.A., Ph.D., M.D., D.N.Sc.) completed by the individual and/or, as appropriate, the individual's pertinent experience and expertise;

(2) The extent to which the individual has engaged in relevant research, the capacities (e.g., principal investigator, assistant) in which the individual has done so, and the quality of such research;

(3) The extent of the professional recognition received by the individual as reflected by awards and other honors received from scientific and professional organizations outside the Department of Health and Human Services;

(4) The need of the peer review group to include in its membership experts representing various areas of specialization in relevant scientific and technical fields, or specific health care issues; and

(5) Appropriate representation based on gender, racial/ethnic origin, and geography, to the extent practicable.

(d) *Term of peer review group members.* Notwithstanding section 922(c)(3) of the PHS Act, members of peer review groups appointed to review contract proposals will be appointed to such groups for a limited period of time, as determined by the Administrator; such as on an annual basis, or until the peer review of the contract proposals is completed, or until the expiration of the contract(s) awarded as a result of the peer review.

(e) *Conflict of interest.* (1) Members of peer review groups will be screened for potential conflicts of interest prior to appointment and will be required to follow Department policies and procedures consistent with the Standards of Ethical Conduct for Employees of the Executive Branch (5 CFR part 2635) and Executive Order 12674 (as modified by Executive Order 12731).

(2) In addition to any restrictions referenced under paragraph (e)(1) of this section:

(i) No member of a peer review group may participate in or be present during any review by such group of a contract proposal in which, to the member's knowledge, any of the following has a financial interest:

(A) The member or his or her spouse, minor child, or partner;

(B) Any organization in which the member is serving as an officer, director, trustee, general partner, or employee; or

(C) Any organization with which the member is negotiating or has any arrangement concerning prospective employment or other similar association, and further;

(ii) In the event any member of a peer review group or his or her spouse, parent, child, or partner is currently or expected to be the project director or member of the staff responsible for carrying out any contract requirements as specified in the contract proposal, that member is disqualified and will be replaced as appropriate.

§ 67.104 Confidentiality.

Identifying information obtained in the course of conducting AHCPR contract activities under this subpart is protected by section 903(c) of the PHS Act. Specifically:

(a) No information obtained in the course of conducting AHCPR contract activities under this subpart, if the entity or individual supplying the information or described in it is identifiable, may be used for any purpose other than the purpose for which it was supplied, unless the identifiable entity or individual supplying the information or described in it has consented to such other use, in the recorded form and manner as the Administrator may require.

(b) No information obtained in the course of conducting AHCPR contract activities under this subpart may be published or released in other form if the individual who supplied the information or who is described in it is identifiable, unless such individual has consented, in the recorded form and manner as the Administrator may require, to such publication or release.

§ 67.105 Control of data and availability of publications.

(a) Data will be collected, maintained, and supplied as provided in each contract subject to the confidentiality requirements of section 903(c) of the PHS Act, section 1142(d) of the Social Security Act, and § 67.104 of this subpart.

(b) All publications, reports, papers, statistics, or other materials developed from work supported in whole or in part by contracts under Title IX of the PHS Act or section 1142 of the Social Security Act, if applicable, must be submitted to the Administrator in accordance with the terms of the contract. All publications must include an acknowledgment that such materials are the results of, or describe, a contractual activity supported by AHCPR.

(c) In accordance with 48 CFR 52.227–14, unless otherwise specified in the contract, AHCPR will retain a license to use, disclose, reproduce, prepare derivative works from, distribute copies to the public, and perform publicly and display publicly any copyrightable materials produced under a contract for any purpose consistent with AHCPR's statutory responsibilities, and to have or permit others to do so for accomplishment of AHCPR purposes.

(d) Except for identifying information protected by section 903(c) of the PHS Act, the Administrator, as appropriate, will make information provided in accordance with paragraphs (a) and (b) of this section available, and arrange for dissemination of such information and materials on as broad a basis as practicable and in such form as to make them as useful as possible to a variety of audiences, including health care providers, practitioners, consumers, educators, and policymakers.

PART 68a—NATIONAL INSTITUTES OF HEALTH (NIH) CLINICAL RESEARCH LOAN REPAYMENT PROGRAM FOR INDIVIDUALS FROM DISADVANTAGED BACKGROUNDS (CR–LRP)

Sec.

68a.1 What is the scope and purpose of the NIH Clinical Research Loan Repayment Program for Individuals from Disadvantaged Backgrounds (CR–LRP)?
68a.2 Definitions.
68a.3 Who is eligible to apply?
68a.4 Who is eligible to participate?
68a.5 Who is ineligible to participate?
68a.6 How do individuals apply to participate in the CR–LRP?
68a.7 How are applicants selected to participate in the CR–LRP?
68a.8 What does the CR–LRP provide to participants?
68a.9 What loans qualify for repayment?
68a.10 What does an individual have to do in return for loan repayments received under the CR–LRP?
68a.11 How does an individual receive loan repayments beyond the initial two-year contract?
68a.12 What will happen if an individual does not comply with the terms and conditions of participation in the CR–LRP?
68a.13 Under what circumstances can the service or payment obligation be canceled, waived, or suspended?
68a.14 When can a CR–LRP payment obligation be discharged in bankruptcy?
68a.15 Additional conditions.
68a.16 What other regulations and statutes apply?

AUTHORITY: 42 U.S.C. 288–5.

SOURCE: 63 FR 58312, Oct. 30, 1998, unless otherwise noted.

§68a.1 What is the scope and purpose of the NIH Clinical Research Loan Repayment Program for Individuals from Disadvantaged Backgrounds (CR–LRP)?

This part applies to the award of educational loan payments under the NIH Clinical Research Loan Repayment Program for Individuals from Disadvantaged Backgrounds (CR–LRP) authorized by section 487E of the Public Health Service Act (42 U.S.C. 288–5). The purpose of this program is to recruit and retain appropriately qualified health professionals, who are from disadvantaged backgrounds and have substantial educational debt relative to income, to conduct clinical research as NIH employees.

§68a.2 Definitions.

As used in this part:

Act means the Public Health Service Act, as amended (42 U.S.C. 201 et seq.).

Applicant means an individual who applies to, and meets the eligibility criteria for the CR–LRP.

Approved clinical research means clinical research approved by the Clinical Research Loan Repayment Committee.

Clinical privileges means the delineation of privileges for patient care granted to qualified health professionals by the NIH Medical Executive Committee or other appropriate credentialing board.

Clinical research means activities which qualify for inclusion as clinical research in the CR–LRP as determined by the Clinical Research Loan Repayment Committee.

Clinical Research Loan Repayment Committee (CR–LRC) means the scientific board assembled to review, rank, and approve or disapprove Clinical Research Loan Repayment Program applications. The CR–LRC is composed of NIH scientific staff and co-chaired by the Associate Director for Clinical Research, NIH, and the Associate Director for Research on Minority Health, NIH. Members are nominated by the Deputy Director, Intramural Research, NIH, and the co-chairs, and appointed by the Director, NIH.

Clinical Research Loan Repayment Program (CR–LRP or Program) means the

NIH Clinical Research Loan Repayment Program for Individuals from Disadvantaged Backgrounds authorized by section 487E of the Act, as amended.

Clinical Research Loan Repayment Program (CR–LRP or Program) contract refers to the agreement, which is signed by an applicant and the Secretary, wherein the applicant from a disadvantaged background agrees to engage in clinical research as an employee of the NIH and the Secretary agrees to repay qualified educational loans for a prescribed period as specified in this part.

Clinical researcher means an NIH employee with clinical privileges who is conducting approved clinical research.

Commercial loans means loans made by banks, credit unions, savings and loan associations, not-for-profit organizations, insurance companies, schools, and other financial or credit institutions which are subject to examination and supervision in their capacity as lending institutions by an agency of the United States or of the State in which the lender has its principal place of business.

Current payment status means that a qualified educational loan is not past due in its payment schedule as determined by the lending institution.

Debt threshold refers to the minimum amount of qualified educational debt an individual must have, on his/her program eligibility date, in order to be eligible for Program benefits and, for purposes of eligibility under this part, debt threshold means that the qualified educational debt must equal or exceed 20 percent of an individual's annual NIH salary on his/her program eligibility date.

Educational expenses means the cost of the health professional's education, including the tuition expenses and other educational expenses such as fees, books, supplies, educational equipment and materials, and laboratory expenses.

Government loans means loans made by Federal, State, county, or city agencies which are authorized by law to make such loans.

Individual from disadvantaged background means an individual who:

(1) Comes from an environment that inhibited the individual from obtaining the knowledge, skill and ability required to enroll in and graduate from a health professions school; or

(2) Comes from a family with an annual income below a level based on low-income thresholds according to family size published by the U.S. Bureau of the Census, adjusted annually for changes in the Consumer Price Index, and adjusted by the Secretary for use in all health professions programs. The Secretary periodically publishes these income levels in the FEDERAL REGISTER.

Institute, Center, or *Agency* (ICA) means an institute, center, or agency of the National Institutes of Health.

Living expenses means the reasonable cost of room and board, transportation and commuting costs, and other reasonable costs incurred during an individual's attendance at an educational institution.

Participant means an individual whose application to the CR–LRP has been approved and whose Program contract has been executed by the Secretary.

Program means the NIH Clinical Research Loan Repayment Program for Individuals from Disadvantaged Backgrounds.

Program eligibility date means the date on which an individual's Program contract is executed by the Secretary and that individual is engaged in approved clinical research as an employee of the NIH.

Qualified educational loans and interest/debt include Government and commercial educational loans and interest for:

(1) Undergraduate, graduate, and health professional school tuition expenses;

(2) Other reasonable educational expenses required by the school(s) attended, including fees, books, supplies, educational equipment and materials, and laboratory expenses; and (3) reasonable living expenses, including the cost of room and board, transportation and commuting costs, and other reasonable living expenses incurred.

Reasonable educational and living expenses means those educational and living expenses which are equal to or less than the sum of the school's estimated

standard student budget for educational and living expenses for the degree program and for the year(s) during which the participant was enrolled in school. If there is no standard budget available from the school or if the participant requests repayment for educational and living expenses which exceed the standard student budget, reasonableness of educational and living expenses incurred must be substantiated by additional contemporaneous documentation, as determined by the Secretary.

Repayable debt means the portion, as established by the Secretary, of an individual's total qualified educational debt relative to the NIH salary, which can be paid by the CR–LRP. Specifically, qualifying educational debt amounts in excess of 50 percent of the debt threshold will be considered for repayment.

Salary means base pay plus quarters, subsistence, and variable housing allowances, if applicable.

School means undergraduate, graduate, and health professions schools which are accredited by a body or bodies recognized for accreditation purposes by the Secretary of Education.

Secretary means the Secretary of Health and Human Services and any other officer or employee of the Department of Health and Human Services to whom the authority involved has been delegated.

Service means the Public Health Service.

State means one of the fifty States, the District of Columbia, the Commonwealth of Puerto Rico, the Northern Mariana Islands, the U.S. Virgin Islands, Guam, American Samoa, and the Trust Territory of the Pacific Islands (the Federated States of Micronesia, the Republic of the Marshall Islands, and the Republic of Palau).

Withdrawal means a request by a participant, prior to the Program making payments on his or her behalf, for withdrawal from Program participation. A withdrawal is without penalty to the participant and without obligation to the Program.

§68a.3 Who is eligible to apply?

To be eligible to apply to the CR–LRP, an individual must be a citizen, national, or permanent resident of the United States; hold a M.D., Ph.D., D.O., D.D.S., D.M.D., A.D.N./B.S.N., or equivalent degree; have, on his/her program eligibility date, qualified educational debt equal to or in excess of the debt threshold; and be an individual from a disadvantaged background.

§68a.4 Who is eligible to participate?

To be eligible to participate in the CR–LRP, an applicant must have the recommendation of the employing ICA Scientific Program Director, the concurrence of the employing ICA Director, and the approval of the CR–LRC. Since participation in the Program is contingent, in part, upon employment with NIH, a Program contract may not be awarded to an applicant until an employment commitment has been made by the employing ICA Personnel Department.

§68a.5 Who is ineligible to participate?

The following individuals are ineligible for CR–LRP participation:

(a) Persons who are not eligible applicants as specified under section 68a.3;

(b) Persons who owe an obligation of health professional service to the Federal Government, a State, or other entity, unless a deferral is granted for the length of his/her service obligation under the CR–LRP. The following are examples of programs which have a service obligation: Physicians Shortage Area Scholarship Program, National Research Service Award Program, Public Health Service Scholarship, National Health Service Corps Scholarship Program, Armed Forces (Army, Navy, or Air Force) Professions Scholarship Program, Indian Health Service Scholarship Program, and the NIH AIDS Research Loan Repayment Program.

(c) Persons who are not NIH employees, such as Intramural Research Training Award (IRTA) recipients, Visiting Fellows, National Research Service Award (NRSA) recipients, Guest Researchers or Special Volunteers, NIH-National Research Council (NRC) Biotechnology Research Associates Program participants, and Intergovernmental Personnel Act (IPA) participants; or

(d) Persons who do not have clinical privileges.

§ 68a.6 How do individuals apply to participate in the CR–LRP?

An application for participation in the CR–LRP shall be submitted to the NIH office which is responsible for the Program's administration, in such form and manner as the Secretary may prescribe.

§ 68a.7 How are applicants selected to participate in the CR–LRP?

To be selected for participation in the CR–LRP, applicants must satisfy the following requirements:

(a) Applicants must meet the eligibility requirements specified in § 68a.3 and § 68a.4.

(b) Applicants must not be ineligible for participation as specified in § 68a.5.

(c) Applicants must be selected for approval by the CR–LRC, based upon a review of their applications.

§ 68a.8 What does the CR–LRP provide to participants?

(a) Loan repayments: For each year of service the individual agrees to serve, with a minimum of 2 years of obligated service, the Secretary may pay up to $20,000 per year of a participant's repayable debt.

(b) Under § 68a.8(a), the Secretary will make payments in the discharge of debt to the extent appropriated funds are available for these purposes.

§ 68a.9 What loans qualify for repayment?

(a) The CR–LRP will repay participants' lenders the principal, interest, and related expenses of qualified Government and commercial educational loans obtained by participants for the following:

(1) Undergraduate, graduate, and health professional school tuition expenses;

(2) Other reasonable educational expenses required by the school(s) attended, including fees, books, supplies, educational equipment and materials, and laboratory expenses; and

(3) Reasonable living expenses, including the cost of room and board, transportation and commuting costs, and other living expenses as determined by the Secretary.

(b) The following educational loans are ineligible for repayment under the CR–LRP:

(1) Loans obtained from other than a government entity or commercial lending institution;

(2) Loans for which contemporaneous documentation is not available;

(3) Loans or portions of loans obtained for educational or living expenses which exceed the standard of reasonableness as determined by the participant's standard school budget for the year in which the loan was made, and are not determined by the Secretary to be reasonable based on additional documentation provided by the individual;

(4) Loans, financial debts, or service obligations incurred under the following programs: Physicians Shortage Area Scholarship Program (Federal or State), National Research Service Award Program, Public Health and National Health Service Corps Scholarship Training Program, National Health Service Corps Scholarship Program, Armed Forces (Army, Navy, or Air Force) Health Professions Scholarship Program, Indian Health Service Program, and similar programs, upon determination by the Secretary, which provide loans, scholarships, loan repayments, or other awards in exchange for a future service obligation;

(5) Any loan in default or not in a current payment status;

(6) Loan amounts which participants have paid or were due to have paid prior to the program eligibility date; and

(7) Loans for which promissory notes have been signed after the program eligibility date.

§ 68a.10 What does an individual have to do in return for loan repayments received under the CR–LRP?

Individuals must agree to be engaged in approved clinical research, as employees of the NIH, for a minimum initial period of two consecutive years.

§68a.11 How does an individual receive loan repayments beyond the initial two-year contract?

An individual may apply for and the Secretary may grant extension contracts for one-year periods, if there is sufficient debt remaining to be repaid and the individual is engaged in approved clinical research as an NIH employee.

§68a.12 What will happen if an individual does not comply with the terms and conditions of participation in the CR–LRP?

(a) Absent withdrawal (see §68a.2) or termination under paragraph (d) of this section, any participant who fails to complete the minimum two-year service obligation required under the Program contract will be considered to have breached the contract and will be subject to assessment of monetary damages and penalties as follows:

(1) Participants who leave during the first year of the initial contract are liable for amounts already paid by the NIH on behalf of the participant plus an amount equal to $1,000 multiplied by the number of months of the original service obligation.

(2) Participants who leave during the second year of the contract are liable for amounts already paid by the NIH on behalf of the participant plus $1,000 for each unserved month.

(b) Payments of any amount owed under paragraph (a) of this section shall be made within one year of the participant's breach (or such longer period as determined by the Secretary).

(c) Participants who sign a continuation contract for any year beyond the initial two-year period and fail to complete the one-year period specified are liable for the pro rata amount of any benefits advanced beyond the period of completed service.

(d) Terminations will not be considered a breach of contract in cases where such terminations are beyond the control of the participant as follows:

(1) Terminations for cause or for convenience of the Government will not be considered a breach of contract and monetary damages will not be assessed.

(2) Occasionally, a participant's research assignment may evolve and change to the extent that the individual is no longer engaged in approved clinical research. Similarly, the research needs and priorities of the ICA and/or the NIH may change to the extent that a determination is made that the health professional's skills may be better utilized in a non-clinical research assignment. Under these circumstances, the following will apply:

(i) Program participation and benefits will cease as of the date an individual is no longer engaged in approved clinical research; and

(ii) Normally, job changes of this nature will not be considered a breach of contract on the part of either the NIH or the participant. Based on the recommendation of the ICA Director and concurrence of the Secretary, the participant will be released from the remainder of his or her service obligation without assessment of monetary penalties. The participant in this case will be permitted to retain all Program benefits made or owed by NIH on his/her behalf up to the date the individual is no longer engaged in approved clinical research, except the pro rata amount of any benefits advanced beyond the period of completed service.

§68a.13 Under what circumstances can the service or payment obligation be canceled, waived, or suspended?

(a) Any obligation of a participant for service or payment to the Federal Government under this part will be canceled upon the death of the participant.

(b) The Secretary may waive or suspend any service or payment obligation incurred by the participant upon request whenever compliance by the participant:

(1) Is impossible,

(2) Would involve extreme hardship to the participant, or

(3) If enforcement of the service or payment obligation would be against equity and good conscience.

(4) The Secretary may approve a request for a suspension of the service or payment obligations for a period of 1 year. A renewal of this suspension may also be granted.

(c) Compliance by a participant with a service or payment obligation will be

considered impossible if the Secretary determines, on the basis of such information and documentation as may be required, that the participant suffers from a physical or mental disability resulting in the permanent inability of the participant to perform the service or other activities which would be necessary to comply with the obligation.

(d) In determining whether to waive or suspend any or all of the service or payment obligations of a participant as imposing an undue hardship and being against equity and good conscience, the Secretary, on the basis of such information and documentation as may be required, will consider:

(1) The participant's present financial resources and obligations;

(2) The participant's estimated future financial resources and obligations; and

(3) The extent to which the participant has problems of a personal nature, such as a physical or mental disability or terminal illness in the immediate family, which so intrude on the participant's present and future ability to perform as to raise a presumption that the individual will be unable to perform the obligation incurred.

§ 68a.14 When can a CR–LRP payment obligation be discharged in bankruptcy?

Any payment obligation incurred under § 68a.12 may be discharged in bankruptcy under Title 11 of the United States Code only if such discharge is granted after the expiration of the five-year period beginning on the first date that payment is required and only if the bankruptcy court finds that a nondischarge of the obligation would be unconscionable.

§ 68a.15 Additional conditions.

When a shortage of funds exists, participants may be funded partially, as determined by the Secretary. However, once a CR–LRP contract has been signed by both parties, the Secretary will obligate such funds as necessary to ensure that sufficient funds will be available to pay benefits for the duration of the period of obligated service unless, by mutual written agreement between the Secretary and the applicant, specified otherwise. Benefits will be paid on a quarterly basis after each service period unless specified otherwise by mutual written agreement between the Secretary and the applicant. The Secretary may impose additional conditions as deemed necessary.

§ 68a.16 What other regulations and statutes apply?

Several other regulations and statutes apply to this part. These include, but are not necessarily limited to:

Debt Collection Act of 1982, Pub. L. 97–365 (5 U.S.C. 5514);

Fair Credit Reporting Act (15 U.S.C. 1681 *et seq.*);

Federal Debt Collection Procedures Act of 1990, Pub. L. 101–647 (28 U.S.C. 1); and Privacy Act of 1974 (5 U.S.C. 552a).

SUBCHAPTER F—QUARANTINE, INSPECTION, LICENSING

PART 71—FOREIGN QUARANTINE

Subpart A—Definitions and General Provisions

Sec.
71.1 Scope and definitions.
71.2 Penalties.
71.3 Designation of yellow fever vaccination centers: Validation stamps.

Subpart B—Measures at Foreign Ports

71.11 Bills of health.

Subpart C—Notice of Communicable Disease Prior to Arrival

71.21 Radio report of death or illness.

Subpart D—Health Measures at U.S. Ports: Communicable Diseases

71.31 General provisions.
71.32 Persons, carriers, and things.
71.33 Persons: Isolation and surveillance.
71.34 Carriers of U.S. military services.
71.35 Report of death or illness on carrier during stay in port.

Subpart E—Requirements Upon Arrival at U.S. Ports: Sanitary Inspection

71.41 General provisions.
71.42 Disinsection of imports.
71.43 Exemption for mails.
71.44 Disinsection of aircraft.
71.45 Food, potable water, and waste: U.S. seaports and airports.
71.46 Issuance of Deratting Certificates and Deratting Exemption Certificates.
71.47 Special provisions relating to airports: Office and isolation facilities.
71.48 Carriers in intercoastal and interstate traffic.

Subpart F—Importations

71.51 Dogs and cats.
71.52 Turtles, tortoises, and terrapins.
71.53 Nonhuman primates.
71.54 Etiological agents, hosts, and vectors.
71.55 Dead bodies.

AUTHORITY: Sec. 215 of Public Health Service (PHS) Act, as amended (42 U.S.C. 216); secs. 361–369, PHS Act, as amended (42 U.S.C. 264–272); E.O. 12452 of December 22, 1983, 48 FR 56927.

SOURCE: 50 FR 1519, Jan. 11, 1985, unless otherwise noted.

Subpart A—Definitions and General Provisions

§ 71.1 Scope and definitions.

(a) The provisions of this part contain the regulations to prevent the introduction, transmission, and spread of communicable disease from foreign countries into the States or possessions of the United States. Regulations pertaining to preventing the interstate spread of communicable diseases are contained in 21 CFR parts 1240 and 1250.

(b) As used in this part the term:

Carrier means a ship, aircraft, train, road vehicle, or other means of transport, including military.

Communicable disease means an illness due to a specific infectious agent or its toxic products which arises through transmission of that agent or its products from an infected person or animal or a reservoir to a susceptible host, either directly, or indirectly through an intermediate animal host, vector, or the inanimate environment.

Contamination means the presence of undesirable substances or material which may contain infectious agents or their toxic products.

Controlled Free Pratique means permission for a carrier to enter a U.S. port, disembark, and begin operation under certain stipulated conditions.

Deratting Certificate means a certificate issued under the instructions of the Director, in the form prescribed by the International Health Regulations, recording the inspection and deratting of the ship.

Deratting Exemption Certificate means a certificate issued under the instructions of the Director, in the form prescribed by the International Health Regulations, recording the inspection and exemption from deratting of the ship which is rodent free.

Detention means the temporary holding of a person, ship, aircraft, or other carrier, animal, or thing in such place and for such period of time as may be determined by the Director.

Director means the Director, Centers for Disease Control, Public Health Service, Department of Health and

Human Services, or his/her authorized representative.

Disinfection means the killing of infectious agents or inactivation of their toxic products outside the body by direct exposure to chemical or physical agents.

Disinfestation means any chemical or physical process serving to destroy or remove undesired small animal forms, particularly arthropods or rodents, present upon the person, the clothing, or the environment of an individual, or upon animals and carriers.

Disinsection means the operation in which measures are taken to kill the insect vectors of human disease present in carriers and containers.

Educational purpose means use in the teaching of a defined educational program at the university level or equivalent.

Exhibition purpose means use as a part of a display in a facility comparable to a zoological park or in a trained animal act. The animal display must be open to the general public at routinely scheduled hours on 5 or more days of each week. The trained animal act must be routinely scheduled for multiple performances each week and open to the general public except for reasonable vacation and retraining periods.

Ill person means a person who:

(1) Has a temperature of 100 °F. (or 38 °C.) or greater, accompanied by a rash, glandular swelling, or jaundice, or which has persisted for more than 48 hours; or

(2) Has diarrhea, defined as the occurrence in a 24-hour period of three or more loose stools or of a greater than normal (for the person) amount of loose stools.

International Health Regulations means the International Health Regulations of the World Health Organization, adopted by the Twenty-Second World Health Assembly in 1969, as amended by the Twenty-Sixth World Health Assembly in 1973, the Thirty-Fourth World Health Assembly in 1981, and as may be further amended.

International voyage means: (1) In the case of a carrier, a voyage between ports or airports of more than one country, or a voyage between ports or airports of the same country if the ship or aircraft stopped in any other country on its voyage; or (2) in the case of a person, a voyage involving entry into a country other than the country in which that person begins his/her voyage.

Isolation means: (1) When applied to a person or group of persons, the separation of that person or group of persons from other persons, except the health staff on duty, in such a manner as to prevent the spread of infection; or (2) when applied to animals, the separation of an animal or group of animals from persons, other animals, or vectors of disease in such a manner as to prevent the spread of infection.

Military services means the U.S. Army, the U.S. Air Force, the U.S. Navy, and the U.S. Coast Guard.

Scientific purpose means use for scientific research following a defined protocol and other standards for research projects as normally conducted at the university level. The term also includes the use for safety testing, potency testing, and other activities related to the production of medical products.

Surveillance means the temporary supervision of a person who may have or has been exposed to a communicable disease.

U.S. port means any seaport, airport, or border crossing point under the control of the United States.

United States means the several States, the District of Columbia, Guam, the Commonwealth of Puerto Rico, the Northern Mariana Islands, the Virgin Islands, American Samoa, and the Trust Territory of the Pacific Islands.

Vector means an animal (including insects) or thing which conveys or is capable of conveying infectious agents from a person or animal to another person or animal.

§ 71.2 Penalties.

Any person violating any provision of these regulations shall be subject to a fine of not more than $1,000 or to imprisonment for not more than 1 year, or both, as provided in section 368 of the Public Health Service Act (42 U.S.C. 271).

§71.3 Designation of yellow fever vaccination centers; Validation stamps.

(a) *Designation of yellow fever vaccination centers.* (1) The Director is responsible for the designation of yellow fever vaccination centers authorized to issue certificates of vaccination. This responsibility is delegated by the Director to a State or territorial health department with respect to yellow fever vaccination activities of non-Federal medical, public health facilities, and licensed physicians functioning within the respective jurisdictions of a State or territorial health department. Designation may be made upon application and presentation of evidence satisfactory to a State or territorial health department that the applicant has adequate facilities and professionally trained personnel for the handling, storage, and administration of a safe, potent, and pure yellow fever vaccine. Medical facilities of Federal agencies are authorized to obtain yellow fever vaccine without being designated as a yellow fever vaccination center by the Director.

(2) A designated yellow fever vaccination center shall comply with the instruction issued by the Director or by a delegated officer or employee of a State or territorial health department for the handling, storage, and administration of yellow fever vaccine. If a designated center fails to comply with such instruction, after notice to the center, the Director or, for non-Federal centers, a State or territorial health department, may revoke designation.

(b) *Validation stamps.* International Certificates of Vaccination against cholera and yellow fever issued for vaccinations performed in the United States shall be validated by:

(1) The Seal of the Public Health Service; or

(2) The Seal of the Department of State; or

(3) The stamp of the Department of Defense; or

(4) The stamp issued to the National Aeronautics and Space Administration; or

(5) The stamp issued by a State or territorial health department; or

(6) An official stamp of a design and size approved by the Director for such purpose.

Subpart B—Measures at Foreign Ports

§71.11 Bills of health.

A carrier at any foreign port clearing or departing for any U.S. port shall not be required to obtain or deliver a bill of health.

Subpart C—Notice of Communicable Disease Prior to Arrival

§71.21 Radio report of death or illness.

(a) The master of a ship destined for a U.S. port shall report immediately to the quarantine station at or nearest the port at which the ship will arrive, the occurrence, on board, of any death or any ill person among passengers or crew (including those who have disembarked or have been removed) during the 15-day period preceding the date of expected arrival or during the period since departure from a U.S. port (whichever period of time is shorter).

(b) The commander of an aircraft destined for a U.S. airport shall report immediately to the quarantine station at or nearest the airport at which the aircraft will arrive, the occurrence, on board, of any death or ill person among passengers or crew.

(c) In addition to paragraph (a) of this section, the master of a ship carrying 13 or more passengers must report by radio 24 hours before arrival the number of cases (including zero) of diarrhea in passengers and crew recorded in the ship's medical log during the current cruise. All cases of diarrhea that occur after the 24 hour report must also be reported not less than 4 hours before arrival.

(Approved by the Office of Management and Budget under control number 0920–0134)

Subpart D—Health Measures at U.S. Ports: Communicable Diseases

§71.31 General provisions.

(a) Upon arrival at a U.S. port, a carrier will not undergo inspection unless the Director determines that a failure to inspect will present a threat of introduction of communicable diseases

into the United States, as may exist when the carrier has on board individual(s) reportable in accordance with § 71.21 or meets the circumstances described in § 71.42. Carriers not subject to inspection under this section will be subject to sanitary inspection under § 71.41 of this part.

(b) The Director may require detention of a carrier until the completion of the measures outlined in this part that are necessary to prevent the introduction or spread of a communicable disease. The Director may issue a controlled free pratique to the carrier stipulating what measures are to be met, but such issuance does not prevent the periodic boarding of a carrier and the inspection of persons and records to verify that the conditions have been met for granting the pratique.

§ 71.32 Persons, carriers, and things.

(a) Whenever the Director has reason to believe that any arriving person is infected with or has been exposed to any of the communicable diseases listed in paragraph (b) of this section, he/she may detain, isolate, or place the person under surveillance and may order disinfection or disinfestation as he/she considers necessary to prevent the introduction, transmission, or spread of the listed communicable diseases.

(b) The communicable diseases authorizing the application of sanitary, detention, and/or isolation measures under paragraph (a) of this section are: cholera or suspected cholera, diphtheria, infectious tuberculosis, plague, suspected smallpox, yellow fever, or suspected viral hemorrhagic fevers (Lassa, Marburg, Ebola, Congo-Crimean, and others not yet isolated or named).

(c) Whenever the Director has reason to believe that any arriving carrier or article or thing on board the carrier is or may be infected or contaminated with a communicable disease, he/she may require detention, disinsection, disinfection, disinfestation, fumigation, or other related measures respecting the carrier or article or thing as he/she considers necessary to prevent the introduction, transmission, or spread of communicable diseases.

§ 71.33 Persons: Isolation and surveillance.

(a) Persons held in isolation under this subpart may be held in facilities suitable for isolation and treatment.

(b) The Director may require isolation where surveillance is authorized in this subpart whenever the Director considers the risk of transmission of infection to be exceptionally serious.

(c) Every person who is placed under surveillance by authority of this subpart shall, during the period of surveillance:

(1) Give information relative to his/her health and his/her intended destination and report, in person or by telephone, to the local health officer having jurisdiction over the areas to be visited, and report for medical examinations as may be required;

(2) Upon arrival at any address other than that stated as the intended destination when placed under surveillance, or prior to departure from the United States, inform, in person or by telephone, the health officer serving the health jurisdiction from which he/she is departing.

(d) From time to time the Director may, in accordance with section 322 of the Public Health Service Act, enter into agreements with public or private medical or hospital facilities for providing care and treatment for persons detained under this part.

(Approved by the Office of Management and Budget under control number 0920–0134)

[50 FR 1519, Jan. 11, 1985; 50 FR 3910, Jan. 29, 1985]

§ 71.34 Carriers of U.S. military services.

(a) Carriers belonging to or operated by the military services of the United States may be exempted from inspection if the Director is satisfied that they have complied with regulations of the military services which also meet the requirements of the regulations in this part. (For applicable regulations of the military services, see Army Regulation No. 40–12, Air Force Regulation No. 161–4, Secretary of the Navy Instruction 6210.2, and Coast Guard Commandant Instruction 6210.2).

(b) Notwithstanding exemption from inspection of carriers under this section, animals or articles on board shall be required to comply with the applicable requirements of subpart F of this part.

§ 71.35 Report of death or illness on carrier during stay in port.

The master of any carrier at a U.S. port shall report immediately to the quarantine station at or nearest the port the occurrence, on board, of any death or any ill person among passengers or crew.

(Approved by the Office of Management and Budget under control number 0920–0134)

Subpart E—Requirements Upon Arrival at U.S. Ports: Sanitary Inspection

§ 71.41 General provisions.

Carriers arriving at a U.S. port from a foreign area shall be subject to a sanitary inspection to determine whether there exists rodent, insect, or other vermin infestation, contaminated food or water, or other insanitary conditions requiring measures for the prevention of the introduction, transmission, or spread of communicable disease.

§ 71.42 Disinfection of imports.

When the cargo manifest of a carrier lists articles which may require disinfection under the provisions of this part, the Director shall disinfect them on board or request the appropriate customs officer to keep the articles separated from the other cargo pending appropriate disposition.

§ 71.43 Exemption for mails.

Except to the extent that mail contains any article or thing subject to restrictions under subpart F of this part, nothing in the regulations in this part shall render liable to detention, disinfection, or destruction any mail conveyed under the authority of the postal administration of the United States or of any other Government.

§ 71.44 Disinsection of aircraft.

(a) The Director may require disinsection of an aircraft if it has left a foreign area that is infected with insect-borne communicable disease and the aircraft is suspected of harboring insects of public health importance.

(b) Disinsection shall be the responsibility of the air carrier or, in the case of aircraft not for hire, the pilot in command, and shall be subject to monitoring by the Director.

(c) Disinsection of the aircraft shall be accomplished immediately after landing and blocking.

(1) The cargo compartment shall be disinsected before the mail, baggage, and other cargo are discharged.

(2) The rest of the aircraft shall be disinsected after passengers and crew deplane.

(d) Disinsection shall be performed with an approved insecticide in accordance with the manufacturer's instructions. The current list of approved insecticides and sources may be obtained from the Division of Quarantine, Center for Prevention Services, Centers for Disease Control, Atlanta, GA 30333.

§ 71.45 Food, potable water, and waste: U.S. seaports and airports.

(a) Every seaport and airport shall be provided with a supply of potable water from a watering point approved by the Commissioner of Food and Drugs, Food and Drug Administration, in accordance with standards established in title 21, Code of Federal Regulations, parts 1240 and 1250.

(b) All food and potable water taken on board a ship or aircraft at any seaport or airport intended for human consumption thereon shall be obtained from sources approved in accordance with regulations cited in paragraph (a) of this section.

(c) Aircraft inbound or outbound on an international voyage shall not discharge over the United States any excrement, or waste water or other polluting materials. Arriving aircraft shall discharge such matter only at servicing areas approved under regulations cited in paragraph (a) of this section.

§ 71.46 Issuance of Deratting Certificates and Deratting Exemption Certificates.

Valid Deratting Certificates or Deratting Exemption Certificates are

not required for ships to enter a U.S. seaport. In accordance with Article 17 of the International Health Regulations, the Public Health Service may perform rodent infestation inspections and issue Deratting Certificates and Deratting Exemption Certificates.

§ 71.47 Special provisions relating to airports: Office and isolation facilities.

Each U.S. airport which receives international traffic shall provide without cost to the Government suitable office, isolation, and other exclusive space for carrying out the Federal responsibilities under this part.

§ 71.48 Carriers in intercoastal and interstate traffic.

Carriers, on an international voyage, which are in traffic between U.S. ports, shall be subject to inspection as described in §§ 71.31 and 71.41 when there occurs on board, among passengers or crew, any death, or any ill person, or when illness is suspected to be caused by insanitary conditions.

Subpart F—Importations

§ 71.51 Dogs and cats.

(a) *Definitions.*

As used in this section the term:

Cat means all domestic cats.

Confinement means restriction of a dog or cat to a building or other enclosure at a U.S. port, en route to destination and at destination, in isolation from other animals and from persons except for contact necessary for its care or, if the dog or cat is allowed out of the enclosure, muzzling and keeping it on a leash.

Dog means all domestic dogs.

Owner means owner or agent.

Valid rabies vaccination certificate means a certificate which was issued for a dog not less than 3 months of age at the time of vaccination and which:

(1) Identifies a dog on the basis of breed, sex, age, color, markings, and other identifying information.

(2) Specifies a date of rabies vaccination at least 30 days before the date of arrival of the dog at a U.S. port.

(3) Specifies a date of expiration which is after the date of arrival of the dog at a U.S. port. If no date of expiration is specified, then the date of vaccination shall be no more than 12 months before the date of arrival at a U.S. port.

(4) Bears the signature of a licensed veterinarian.

(b) *General requirements for admission of dogs and cats*—(1) *Inspection by Director.* The Director shall inspect all dogs and cats which arrive at a U.S. port, and admit only those dogs and cats which show no signs of communicable disease as defined in § 71.1.

(2) *Examination by veterinarian and confinement of dogs and cats.* When, upon inspection, a dog or cat does not appear to be in good health on arrival (e.g., it has symptoms such as emaciation, lesions of the skin, nervous system disturbances, jaundice, or diarrhea), the Director may require prompt confinement and give the owner an opportunity to arrange for a licensed veterinarian to examine the animal and give or arrange for any tests or treatment indicated. The Director will consider the findings of the examination and tests in determining whether or not the dog or cat may have a communicable disease. The owner shall bear the expense of the examination, tests, and treatment. When it is necessary to detain a dog or cat pending determination of its admissibility, the owner shall provide confinement facilities which in the judgment of the Director will afford protection against any communicable disease. The owner shall bear the expense of confinement. Confinement shall be subject to conditions specified by the Director to protect the public health.

(3) *Record of sickness or death of dogs and cats and requirements for exposed animals.* (i) The carrier responsible for the care of dogs and cats shall maintain a record of sickness or death of animals en route to the United States and shall submit the record to the quarantine station at the U.S. port upon arrival. Dogs or cats which have become sick while en route or are dead on arrival shall be separated from other animals as soon as the sickness or death is discovered, and shall be held in confinement pending any necessary examination as determined by the Director.

(ii) When, upon inspection, a dog or cat appears healthy but, during shipment, has been exposed to a sick or dead animal suspected of having a communicable disease, the exposed dog or cat shall be admitted only if examination or tests made on arrival reveal no evidence that the animal may be infected with a communicable disease. The provisions of paragraph (b)(2) of this section shall be applicable to the examination or tests.

(4) *Sanitation.* When the Director finds that the cages or other containers of dogs or cats arriving in the United States are in an insanitary or other condition that may constitute a communicable disease hazard, the dogs or cats shall not be admitted in such containers unless the owner has the containers cleaned and disinfected.

(c) *Rabies vaccination requirements for dogs.* (1) A valid rabies vaccination certificate is required at a U.S. port for admission of a dog unless the owner submits evidence satisfactory to the Director that:

(i) If a dog is less than 6 months of age, it has been only in a country determined by the Director to be rabies-free (a current list of rabies-free countries may be obtained from the Division of Quarantine, Center for Prevention Services, Centers for Disease Control, Atlanta, GA 30333); or

(ii) If a dog is 6 months of age or older, for the 6 months before arrival, it has been only in a country determined by the Director to be rabies-free; or

(iii) The dog is to be taken to a research facility to be used for research purposes and vaccination would interfere with its use for such purposes.

(2) Regardless of the provisions of paragraph (c)(1) of this section, the Director may authorize admission as follows:

(i) If the date of vaccination shown on the vaccination certificate is less than 30 days before the date of arrival, the dog may be admitted, but must be confined until at least 30 days have elapsed since the date of vaccination;

(ii) If the dog is less than 3 months of age, it may be admitted, but must be confined until vaccinated against rabies at 3 months of age and for at least 30 days after the date of vaccination;

(iii) If the dog is 3 months of age or older, it may be admitted, but must be confined until it is vaccinated against rabies. The dog must be vaccinated within 4 days after arrival at destination but no more than 10 days after arrival at a U.S. port. It must be kept in confinement for at least 30 days after the date of vaccination.

(3) When a dog is admitted under paragraph (c)(2) of this section, the Director shall notify the health department or other appropriate agency having jurisdiction at the point of destination and shall provide the address of the specified place of confinement and other pertinent information to facilitate surveillance and other appropriate action.

(d) *Certification requirements.* The owner shall submit such certification regarding confinement and vaccination prescribed under this section as may be required by the Director.

(e) *Additional requirements for the importation of dogs and cats.* Dogs and cats shall be subject to such additional requirements as may be deemed necessary by the Director or to exclusion if coming from areas which the Director has determined to have high rates of rabies.

(f) *Requirements for dogs and cats in transit.* The provisions of this section shall apply to dogs and cats transported through the United States from one foreign country to another, except as provided below:

(1) Dogs and cats that appear healthy, but have been exposed to a sick or dead animal suspected of having a communicable disease, need not undergo examination or tests as provided in paragraph (b)(3) of this section if the Director determines that the conditions under which they are being transported will afford adequate protection against introduction of communicable disease.

(2) Rabies vaccination is not required for dogs that are transported by aircraft or ship and retained in custody of the carrier under conditions that would prevent transmission of rabies.

(g) *Disposal of excluded dogs and cats.* A dog or cat excluded from the United States under the regulations in this part shall be exported or destroyed.

Pending exportation, it shall be detained at the owner's expense in the custody of the U.S. Customs Service at the U.S. port.

(Approved by the Office of Management and Budget under control number 0920–0134)

§ 71.52 Turtles, tortoises, and terrapins.

(a) *Definitions.*

As used in this section the term:

Turtles includes all animals commonly known as turtles, tortoises, terrapins, and all other animals of the order *Testudinata,* class *Reptilia,* except marine species (Families *Dermochelidae* and *Cheloniidae*).

(b) *Importation; general prohibition.* Except as otherwise provided in this section, live turtles with a carapace length of less than 4 inches and viable turtle eggs may not be imported into the United States.

(c) *Exceptions.* (1) Live turtles with a carapace length of less than 4 inches and viable turtle eggs may be imported into the United States, provided that such importation is not in connection with a business, and the importation is limited to lots of fewer than seven live turtles or fewer than seven viable turtle eggs, or any combinations of such turtles and turtle eggs totaling fewer than seven, for any entry.

(2) Seven or more live turtles with a carapace length of less than 4 inches, or seven or more viable turtle eggs or any combination of turtles and turtle eggs totaling seven or more, may be imported into the United States for bona fide scientific or educational purposes or for exhibition when accompanied by a permit issued by the Director.

(3) The requirements in paragraphs (c)(1) and (c)(2) of this section shall not apply to the eggs of marine turtles excluded from these regulations under § 71.52(a).

(d) *Application for permits.* Applications for permits to import turtles, as set forth in paragraph (c)(2) of this section, shall be made by letter to the Director, and shall contain, identify, or describe, the name and address of the applicant, the number of specimens, and the common and scientific names of each species to be imported, the holding facilities, the intended use of the turtles following their importation, the precautions to be undertaken to prevent infection of members of the public with *Salmonella* and *Arizona* bacteria, and any other information and assurances the Director may require.

(e) *Criteria for issuance of permits.* A permit may be issued upon a determination that the holder of the permit will isolate or otherwise confine the turtles and will take such other precautions as may be determined by the Director to be necessary to prevent infection of members of the public with *Salmonella* and *Arizona* bacteria and on condition that the holder of the permit will provide such reports as the Director may require.

(f) *Interstate Regulations.* Upon admission at a U.S. Port, turtles and viable turtle eggs become subject to Food and Drug Administration Regulations (21 CFR 1240.62) regarding general prohibition.

(g) *Other permits.* Permits to import certain species of turtles may be required under other Federal regulations (50 CFR parts 17 and 23) protecting such species.

(Approved by the Office of Management and Budget under control number 0920–0134)

§ 71.53 Nonhuman primates.

(a) *Definitions.*

As used in this section the term:

Importer means any person or corporation, partnership, or other organization, receiving live nonhuman primates from a foreign country within a period of 31 days, beginning with the importation date, whether or not the primates were held for part of the period at another location. The term *importer* includes the original importer and any other person or organization receiving imported primates within the 31-day period.

Nonhuman primates means all nonhuman members of the Order Primates, including, but not limited to, animals commonly known as monkeys, chimpanzees, orangutans, gorillas, gibbons, apes, baboons, marmosets, tamarin, lemurs, and lorises.

(b) *General prohibition.* No person or organization may import live nonhuman primates into the United States unless registered as an importer

in accordance with applicable provisions of this section.

(c) *Uses for which nonhuman primates may be imported and distributed.* Live nonhuman primates may be imported into the United States and sold, resold, or otherwise distributed only for bona fide scientific, educational, or exhibition purposes. The importation of nonhuman primates for use in breeding colonies is also permitted provided that all offspring will be used only for scientific, educational, or exhibition purposes. The maintenance of nonhuman primates as pets, hobby, or an avocation with occasional display to the general public is not a permissible use.

(d) *Registration of importers.* (1) Importers of nonhuman primates shall register with the Director in a manner prescribed by the Director.

(2) Documentary evidence that an importer will use all nonhuman primates solely for the permitted purposes is required.

(3) Registration shall inlcude certification that the nonhuman primates will not be shipped, sold, or otherwise transferred to other persons or organizations without adequate proof that the primates will be used only for the permitted purposes.

(4) Registration shall be for 2 years, effective the date the application for registration is approved by the Director.

(5) Registration may be renewed by filing a registration application form with the Director not less than 30 days nor more than 60 days before expiration of the current registration.

(e) *Recordkeeping and reporting requirement for registered importers.* (1) Importers shall maintain records on each shipment of imported nonhuman primates received. The record on each shipment shall include the number of primates received, species, country of origin, date of importation, the number of primates in the shipment that die within 90 days after receipt, and cause(s) of deaths. If any primates in the shipment are sold or otherwise distributed within 90 days after receipt, the record shall include the number of primates in each shipment or sale, the dates of each shipment or sale, and the identity of the recipients. In addition, the record shall contain copies of documents that were presented to the importer to establish that the recipient would use the primates solely for the permitted purposes. The records shall be maintained in an organized manner in a central location at or in close proximity to the importer's primate holding facility. The records shall be maintained for a period of 3 years and shall be available for inspection by the Director at any time.

(2) Importers shall report to the Director by telephone within 24 hours the occurrence of any illness in nonhuman primates that is suspected of being yellow fever, monkeypox, or Marburg/Ebola disease.

(3) Importers also shall report to the Director by telephone within 24 hours the occurrence of illness in any member of their staff suspected of having an infectious disease acquired from nonhuman primates.

(f) *Disease control measures.* Upon receipt of evidence of exposure of nonhuman primates to a communicable disease that may constitute a threat to public health, the Director may provide for or require examination, treatment, detention, isolation, seizure, or destruction of exposed animals. Any measures required shall be at the owner's expense.

(g) *Disposal of excluded nonhuman primates.* Nonhuman primate(s) excluded from the United States by provisions of this section shall, at the owner's option and expense, be exported, destroyed, or given to a scientific, educational, or exhibition facility under arrangements approved by the Director. If the owner fails to dispose of the nonhuman primate by one of the approved options or fails to select a method of disposal within 7 days, the Director will select the method of disposal. Pending disposal, the nonhuman primate(s) shall be detained at the owner's expense in custody of the U.S. Customs Service at the U.S. port.

(h) *Revocation of an importer's registration.* (1) An importer's registration may be revoked by the Director, upon notice to the importer holding such registration, if the Director determines that the importer has failed to comply with any applicable provisions of this section. The notice shall contain a

statement of the grounds upon which the revocation is based.

(2) The importer may file an answer within 20 days after receipt of the notice. Answers shall admit or deny specifically, and in detail, each allegation in the notice. Allegations in the notice not denied by answer shall be deemed admitted. Matters alleged as affirmative defenses shall be separately stated and numbered. Failure of the importer to file an answer within 20 days after receipt of the notice may be deemed an admission of all allegations of fact recited in the notice.

(3) The importer shall be entitled to a hearing with respect to the revocation upon filing a written request, either in the answer or in a separate document, with the Director within 20 days after the effective date of revocation. Failure to request a hearing shall be deemed a waiver of hearing and as consent to the submission of the case to the Director for decision based on the written record. The failure both to file an answer and to request a hearing shall be deemed to constitute consent to the making of a decision on the basis of available information.

(4) As soon as practicable after the completion of any hearing conducted pursuant to the provisions of this section, the Director shall render a final decision. A copy of such decision shall be served on the importer.

(5) An importer's registration which has been revoked may be reinstated by the Director upon inspection, examination of records, conference with the importer, and receipt of information and assurances of compliance with the requirements of this section.

(i) *Other permits.* In addition to the requirements under this section, permits to import certain species of nonhuman primates may also be required under other Federal regulations (50 CFR parts 17 and 23) protecting such species.

(Approved by the Office of Management and Budget under control number 0920–0134)

§ 71.54 Etiological agents, hosts, and vectors.

(a) A person may not import into the United States, nor distribute after importation, any etiological agent or any arthropod or other animal host or vector of human disease, or any exotic living arthropod or other animal capable of being a host or vector of human disease unless accompanied by a permit issued by the Director.

(b) Any import coming within the provisions of this section will not be released from custody prior to receipt by the District Director of the U.S. Customs Service of a permit issued by the Director.

§ 71.55 Dead bodies.

The remains of a person who died of a communicable disease listed in § 71.32(b) may not be brought into a U.S. port unless the body is (a) properly embalmed and placed in a hermetically sealed casket, (b) cremated, or (c) accompanied by a permit issued by the Director.

PART 72—INTERSTATE SHIPMENT OF ETIOLOGIC AGENTS [1]

Sec.

72.1 Definitions.
72.2 Transportation of diagnostic specimens, biological products, and other materials; minimum packaging requirements.
72.3 Transportation of materials containing certain etiologic agents; minimum packaging requirements.
72.4 Notice of delivery; failure to receive.
72.5 Requirements; variations.
72.6 Additional requirements for facilities transferring or receiving select agents.
72.7 Penalties.
APPENDIX A TO PART 72—SELECT AGENTS

AUTHORITY: 42 U.S.C. 264, 271; 31 U.S.C. 9701; 18 U.S.C. 3559, 3571; 42 U.S.C. 262 note.

SOURCE: 45 FR 48627, July 21, 1980, unless otherwise noted.

§ 72.1 Definitions.

As used in this part:

Biological product means a biological product prepared and manufactured in accordance with the provisions of 9 CFR parts 102–104 and 21 CFR parts 312 and 600–680 and which, in accordance

[1] The requirements of this part are in addition to and not in lieu of any other packaging or other requirements for the transportation of etiologic agents in interstate traffic prescribed by the Department of Transportation and other agencies of the Federal Government.

with such provisions, may be shipped in interstate traffic.

Diagnostic specimen means any human or animal material including, but not limited to, excreta, secreta, blood and its components, tissue, and tissue fluids being shipped for purposes of diagnosis.

Etiologic agent means a viable microorganism or its toxin which causes, or may cause, human disease.

Interstate traffic means the movement of any conveyance or the transportation of persons or property, including any portion of such movement or transportation which is entirely within a State or possession, (a) from a point of origin in any State or possession to a point of destination in any other State or possession, or (b) between a point of origin and a point of destination in the same State or possession but through any other State, possession, or contiguous foreign country.

§ 72.2 Transportation of diagnostic specimens, biological products, and other materials; minimum packaging requirements.

No person may knowingly transport or cause to be transported in interstate traffic, directly or indirectly, any material including, but not limited to, diagnostic specimens and biological products which such person reasonably believes may contain an etiologic agent unless such material is packaged to withstand leakage of contents, shocks, pressure changes, and other conditions incident to ordinary handling in transportation.

§ 72.3 Transportation of materials containing certain etiologic agents; minimum packaging requirements.

Notwithstanding the provisions of § 72.2, no person may knowingly transport or cause to be transported in interstate traffic, directly or indirectly, any material (other than biological products) known to contain, or reasonably believed by such person to contain, one or more of the following etiologic agents unless such material is packaged, labeled, and shipped in accordance with the requirements specified in paragraphs (a) through (f) of this section:

BACTERIAL AGENTS

Acinetobacter calcoaceticus.
Actinobacillus— all species.
Actinomycetaceae— all members.
Aeromonas hydrophila.
Arachnia propionica.
Arizona hinshawii— all serotypes.
Bacillus anthracis.
Bacteroides spp.
Bartonella— all species.
Bordetella— all species.
Borrelia recurrentis, B. vincenti.
Brucella— all species.
Campylobacter (Vibrio) foetus, C. (Vibrio) jejuni.
Chlamydia psittaci, C. trachomatis.
Clostridium botulinum, Cl. chauvoei, Cl. haemolyticum, Cl. histolyticum,Cl. novyi, Cl. septicum, Cl. tetani.
Corynebacterium diphtheriae, C. equi, C. haemolyticum, C. pseudotuberculosis, C. pyogenes, C. renale.
Edwarsiella tarda.
Erysipelothrix insidiosa.
Escherichia coli, all enteropathogenic serotypes.
Francisella (Pasteurella) Tularensis.
Haemophilus ducreyi, H. influenzae.
Klebsiella— all species and all serotypes.
Legionella— all species and all Legionella-like organisms.
Leptospira interrogans— all serovars.
Listeria— all species.
Mimae polymorpha.
Moraxella— all species.
Mycobacterium— all species.
Mycoplasma— all species.
Neisseria gonorrhoeae, N. meningitidis.
Nocardia asteroides.
Pasteurella— all species.
Plesiomonas shigelloides.
Proteus— all species.
Pseudomonas mallei.
Pseudomonas pseudomallei.
Salmonella— all species and all serotypes.
Shigella— all species and all serotypes.
Sphaerophorus necrophorus.
Staphylococcus aureus.
Streptobacillus moniliformis.
Streptococcus pneumoniae.
Streptococcus pyogenes.
Treponema careteum, T. pallidum, and *T. pertenue.*
Vibrio cholerae, V. parahemolyticus.
Yersinia (Pasteurella) pestis, Y. enterocolitica.

FUNGAL AGENTS

Blastomyces dermatitidis.
Coccidioides immitis.
Cryptococcus neoformans.
Histoplasma capsulatum.
Paracoccidioides brasiliensis.

VIRAL AND RICKETTSIAL AGENTS

Adenoviruses—human—all types.

Arboviruses—all types.
Coxiella burnetii.
Coxsackie A and B viruses—all types.
Creutzfeldt—Jacob agent
Cytomegaloviruses.
Dengue viruses—all types.
Ebola virus.
Echoviruses—all types.
Encephalomyocarditis virus.
Hemorrhagic fever agents including, but not limited to, Crimean hemorrhagic fever (Congo), Junin, Machupo viruses, and Korean hemorrhagic fever viruses.
Hepatitis associated materials (hepatitis A, hepatitis B, hepatitis nonA-nonB).
Herpesvirus—all members.
Infectious bronchitis-like virus.
Influenza viruses—all types.
Kuru agent.
Lassa virus.
Lymphocytic choriomeningitis virus.
Marburg virus.
Measles virus.
Mumps virus.
Parainfluenza viruses—all types.
Polioviruses—all types.
Poxviruses—all members.
Rabies virus—all strains.
Reoviruses—all types.
Respiratory syncytial virus.
Rhinoviruses—all types.
Rickettsia— all species.
Rochalimaea quintana.
Rotaviruses—all types.
Rubella virus.
Simian virus 40.
Tick-borne encephalitis virus complex, including Russian spring-summer encephalitis, Kyasanur forest disease, Omsk hemorrhagic fever, and Central European encephalitis viruses.
Vaccinia virus.
Varicella virus.
Variola major and Variola minor viruses.
Vesicular stomatis viruses—all types.
White pox viruses.
Yellow fever virus.[2]

(a) *Volume not exceeding 50 ml.* Material shall be placed in a securely closed, watertight container (primary container (test tube, vial, etc.)) which shall be enclosed in a second, durable watertight container (secondary container). Several primary containers may be enclosed in a single secondary container, if the total volume of all the primary containers so enclosed does not exceed 50 ml. The space at the top, bottom, and sides between the primary and secondary containers shall contain sufficient nonparticulate absorbent material (e.g., paper towel) to absorb the entire contents of the primary container(s) in case of breakage or leakage. Each set of primary and secondary containers shall then be enclosed in an outer shipping container constructed of corrugated fiberboard, cardboard, wood, or other material of equivalent strength.

(b) *Volume greater than 50 ml.* Packaging of material in volumes of 50 ml. or more shall comply with requirements specified in paragraph (a) of this section. In addition, a shock absorbent material, in volume at least equal to that of the absorbent material between the primary and secondary containers, shall be placed at the top, bottom, and sides between the secondary container and the outer shipping container. Single primary containers shall not contain more than 1,000 ml of material. However, two or more primary containers whose combined volumes do not exceed 1,000 ml may be placed in a single, secondary container. The maximum amount of etiologic agent which may be enclosed within a single outer shipping container shall not exceed 4,000 ml.

(c) *Dry ice.* If dry ice is used as a refrigerant, it must be placed outside the secondary container(s). If dry ice is used between the secondary container and the outer shipping container, the shock absorbent material shall be placed so that the secondary container does not become loose inside the outer shipping container as the dry ice sublimates.

(d)(1) The outer shipping container of all materials containing etiologic agents transported in interstate traffic must bear a label as illustrated and described below:

[2] This list may be revised from time to time by Notice published in the FEDERAL REGISTER to identify additional agents which must be packaged in accordance with the requirements contained in this part.

STANDARD FORM 420 JUNE 1973
PRESCRIBED BY DEPT HEW (4.2 CFR)
420-101

ETIOLOGIC AGENTS

BIOMEDICAL MATERIAL

IN CASE OF DAMAGE OR LEAKAGE
NOTIFY DIRECTOR CDC
ATLANTA, GEORGIA
404/633-5313

(2) The color of material on which the label is printed must be white, the symbol red, and the printing in red or white as illustrated.

(3) The label must be a rectangle measuring 51 millimeters (mm) (2 inches) high by 102.5 mm (4 inches) long.

(4) The red symbol measuring 38 mm (1½ inches) in diameter must be centered in a white square measuring 51 mm (2 inches) on each side.

(5) Type size of the letters of label shall be as follows:

Etiologic agents—10 pt. rev.
Biomedical material—14 pt.
In case of damage or leakage—10 pt. rev.
Notify Director CDC, Atlanta, Georgia—8 pt. rev.
404–633–5313—10 pt. rev.

(e) *Damaged packages.* The carrier shall promptly, upon discovery of evidence of leakage or any other damage to packages bearing an Etiologic Agents/Biomedical Material label, isolate the package and notify the Director, Center for Disease Control, 1600 Clifton Road, NE., Atlanta, GA 30333, by telephone: (404) 633–5313. The carrier shall also notify the sender.

(f) *Registered mail or equivalent system.* Transportation of the following etiologic agents shall be by registered mail or an equivalent system which requires or provides for sending notification of receipt to the sender immediately upon delivery:

Coccidioides immitis.
Ebola virus.
Francisella (Pasteurella) tularensis.
Hemorrhagic fever agents including, but not limited to, Crimean hemorrhagic fever (Congo), Junin, Machupo viruses, and Korean hemorrhagic fever viruses.
Herpesvirus simiae (B virus).
Histoplasma capsulatum.
Lassa virus.
Marburg virus.
Pseudomonas mallei.
Pseudomonas pseudomallei.
Tick-borne encephalitis virus complex including, but not limited to, Russian spring-summer encephalitis, Kyasanur forest disease, Omsk Hemorrhagic fever, and Central European encephalitis viruses, Variola minor, and Variola major.
Variola major, Variola minor, and Whitepox viruses.
Yersinia (Pasteurella) pestis.[3]

§72.4 Notice of delivery; failure to receive.

When notice of delivery of materials known to contain or reasonably believed to contain etiologic agents listed in §72.3(f) is not received by the sender within 5 days following anticipated delivery of the package, the sender shall notify the Director, Center for Disease Control, 1600 Clifton Road, NE., Atlanta, GA 30333 (telephone (404) 633–5313).

[3] This list may be revised from time to time by Notice published in the FEDERAL REGISTER to identify additional agents which must be transported in accordance with requirements contained in §72.3(f).

§ 72.5 Requirements; variations.

The Director, Center for Disease Control, may approve variations from the requirements of this section if, upon review and evaluation, it is found that such variations provide protection at least equivalent to that provided by compliance with the requirements specified in this section and such findings are made a matter of official record.

§ 72.6 Additional requirements for facilities transferring or receiving select agents.

(a) *Registration of facilities.* (1) Prior to transferring or receiving a select agent listed in Appendix A of this part, a facility shall register with a registering entity authorized by the Secretary (paragraph (c) of this section) or be approved by the Secretary as equipped and capable of handling the covered agent at Biosafety Level (BL) 2, 3, or 4, depending on the agent.

(2) Registration will include:

(i) Sufficient information provided by the responsible facility official indicating that the applicant facility, and its laboratory or laboratories, are equipped and capable of handling the agents at BL 2, 3, or 4, depending upon the agent, and the type of work being performed with the agents;

(ii) Inspection of the applicant facility at the discretion of the Secretary or the registering entity in consultation with the Secretary;

(iii) Issuance by the registering entity of a registration number unique to each facility;

(iv) Collection of a periodic site registration fee by the registering entity or the Secretary.

A schedule of fees collected by the Secretary to cover the direct costs (e.g., salaries, equipment, travel) and indirect costs (e.g., rent, telephone service and a proportionate share of management and administration costs) related to administration of this part will be published in the FEDERAL REGISTER and updated annually.

(v) Follow-up inspections of the facility by the registering entity or the Secretary, as appropriate, to ensure the facility continues to meet approved standards and recordkeeping requirements.

(3) Such registration shall remain effective until relinquished by the facility or withdrawn by the Secretary or the registering entity.

(4) The registration may be denied or withdrawn by the registering entity or the Secretary based on:

(i) Evidence that the facility is not or is no longer capable of handling covered agents at the applicable biosafety level;

(ii) Evidence that the facility has handled covered agents in a manner in contravention of the applicable biosafety level requirements;

(iii) Evidence that the facility has or intends to use covered agents in a manner harmful to the health of humans;

(iv) Evidence that the facility has failed to comply with any provisions of this part or has acted in a manner in contravention of this part; or

(v) Failure to pay any required registration fee.

(5) The requirements for BSL–2, 3, and 4 operations pertaining to this section are contained in the CDC/NIH publication, ''Biosafety in Microbiological and Biomedical Laboratories,'' Third Edition, May 1993 which is hereby incorporated by reference. The Director of the Federal Register has approved under 5 U.S.C. 552(a) and 1 C.F.R. Part 51 the incorporation by reference of the above publication. Copies may be obtained from the Superintendent of Documents, U.S. Government Printing Office, Washington D.C. 20402. Copies may be inspected at the Centers for Disease Control and Prevention, 1600 Clifton Road, Atlanta, Georgia, or at the Office of the Federal Register, 800 North Capitol Street N.W., Suite 700, Washington D.C.

(6) Additional specific requirements for handling toxins subject to this part must be met and are found in 29 CFR § 1910.1450, ''Occupational Exposure to Hazardous Chemicals in Laboratories.''

(b) *Appeals.* A decision made by the Secretary or a registering entity to deny or withdraw registration of a particular facility may be appealed to the Secretary. An application for appeal must be received by the Secretary no later than 14 days after the appealing party's application for registration was denied or no later than 14 days after the appealing party's registration was

withdrawn. The application must clearly identify the issues presented by the appeal and fully explain the appealing party's position with respect to those issues. The Secretary may allow the filing of opposing briefs, informal conferences, or whatever steps the Secretary considers appropriate to fairly resolve the appeal.

(c) *Authorized registering entities.* (1) The Secretary may authorize a state agency or private entity to register facilities under paragraph (a) of this section, if the Secretary determines that the registering entity's criteria for determining the biosafety standards for facilities handling select agents are consistent with the requirements contained in the CDC/NIH publication ''Biosafety in Microbiological and Biomedical Laboratories,'' Third Edition.

(2) A registering entity shall maintain:

(i) A database of all facilities formerly and currently registered as BL 2, 3, or 4 and capable of working with agents in Appendix A of this part. The database shall include the name and address of the registered facility, the date the facility was registered, the facility's registration number, and the name and phone number of the responsible facility official.

(ii) A copy of each CDC Form EA–101 transmitted by each transferor registered by that registering entity. Such forms shall be made readily accessible to the Secretary and to appropriate federal law enforcement authorities and/or authorized local law enforcement authorities.

(3) In the event the Secretary authorizes more than one registering entity, or if otherwise necessary, the Secretary may require the establishment of a consolidated database to carry out the provisions of § 72.6(c)(2).

(d) *Requests for agents.* (1) Prior to the transfer of any agent contained in Appendix A of this part, a CDC Form EA–101 must be completed for each transfer sought. As specified in CDC Form EA–101, the information provided must include:

(i) The name of the requestor and requesting facility;

(ii) The name of the transferor and transferring facility;

(iii) The names of the responsible facility officials for both the transferor and requestor;

(iv) The requesting facility's registration number;

(v) The transferring facility's registration number;

(vi) The name of the agent(s) being shipped;

(vii) The proposed use of the agent(s); and

(viii) The quantity (number of containers and amount per container) of the agent(s) being shipped.

(2) The form must be signed by the transferor and requestor, and the responsible facility officials representing both the transferring and requesting facilities.

(3) A copy of the completed CDC Form EA–101 must be retained by both transferring and requesting facilities for a period of five (5) years after the date of shipment or for five (5) years after the agents are consumed or properly disposed, whichever is longer.

(4) All CDC forms EA–101 must be produced upon request to appropriate federal and authorized local law enforcement authorities, officials authorized by the Secretary, and officials of the registering entity.

(e) *Verification of registration.* (1) Prior to transferring any agent covered by this part, the transferor's responsible facility official must verify with the requestor's responsible facility official, and as appropriate, with the registering entity:

(i) That the requesting facility retains a valid, current registration;

(ii) That the requestor is an employee of the requesting facility; and

(iii) That the proposed use of the agent by the requestor is correctly indicated on CDC Form EA–101.

(2) In the event that any party is unable to verify the information required in paragraph (e)(1) of this section, or there is suspicion that the agent may not be used for the requested purpose, then the party shall immediately notify CDC.

(f) *Transfer.* (1) Upon completion of the CDC Form EA–101 and verification of registration, the transferring facility must comply with the packaging and shipping requirements in this part

or other applicable regulations when transferring the agent.

(2) The requesting facility's responsible official must acknowledge receipt of the agent telephonically or otherwise electronically within 36 hours of receipt and provide a paper copy or facsimile transmission of receipt to the transferor within 3 business days of receipt of the agent.

(3) Upon telephonic acknowledgment of receipt of the agent, the transferor shall provide a completed paper copy or facsimile transmission of CDC Form EA–101 within 24 hours to the registering entity (holding that facility's registration), in accordance with § 72.6(c)(2) for filing in a centralized repository.

(g) *Inspections.* (1) Registering entities or the Secretary may conduct random or for cause inspections of registered facilities to assure compliance with this part. All CDC forms EA–101 and records deemed relevant by inspecting officials must be produced upon request to authorized personnel conducting these inspections. Inspections may also include review of the mechanisms developed by a facility to track intrafacility transfers as well as the facility's agent disposal procedures.

(2) In addition, the Secretary may conduct inspections of registering entities, and/or any consolidated database established in accordance with § 72.6(c)(3), to assure compliance with this part.

(h) *Exemptions*—(1) *Exemptions for certain select agents:* Select agents otherwise covered by this part are exempt from its provisions if:

(i) The agent is part of a clinical specimen intended for diagnostic, reference, or verification purposes. Isolates of covered agents from clinical specimens shall be disposed of in accordance with § 72.6(i) after diagnostic, reference, or verification procedures have been completed;

(ii) The agent is a toxin having an LD_{50} for vertebrates of more than 100 nanograms per kilogram of body weight which is used for legitimate medical purposes or biomedical research or is one of the listed toxins which has been inactivated for use as a vaccine or otherwise detoxified for use in biomedical research procedures; or

(iii) The agent(s) is an exempted strain specified in Appendix A of this part and/or CDC Form EA–101. Additional exemptions for otherwise covered strains will be considered when CDC reviews and updates the list of select agents (Appendix A of this part). Individuals seeking additions to the list of exemptions should submit a request to CDC that specifies the agent or strain to be exempted and explains why such an exemption should be granted. Future changes to the list of exemptions will be published in the FEDERAL REGISTER for review and comment prior to inclusion on Appendix A of this part.

(2) *Exemption of CLIA certified laboratories:* Clinical laboratories certified under the Clinical Laboratory Improvement Amendments of 1988, (42 U.S.C. 263a) (CLIA), that utilize these select agents for diagnostic, reference, verification, or proficiency testing purposes are exempt from the provisions of § 72.6.

(3) *Procedures for facilities that are not CLIA laboratories but are transferring or receiving select agents to or from a CLIA laboratory*: Facilities that are not CLIA laboratories but are transferring or receiving select agents to or from a CLIA laboratory must comply with the following provisions. (No additional paperwork on behalf of CLIA laboratories is required by this section.)

(i) Prior to transferring a select agent subject to this part to a CLIA laboratory for diagnostic, reference, verification, or proficiency testing purposes, the *transferor* must:

(A) Provide the following information on CDC Form EA–101:

(*1*) The name of the requestor and requesting facility;

(*2*) The name of the transferor and transferring facility;

(*3*) The name of the transferor's responsible facility official;

(*4*) The requesting facility's CLIA certification number (which the transferor must verify as valid and current with the registering entity);

(*5*) The transferring facility's registration number;

(*6*) The name of the agent(s) being shipped;

(*7*) The proposed use of the agent(s); and

(*8*) The quantity (number of containers and amount per container) of the agent(s) being shipped.

(B) Verify receipt of the agent with the CLIA laboratory and note such receipt on CDC Form EA–101;

(C) Transmit a copy of the form, signed by the transferror and the responsible facility official representing the transfering facility, to the registering entity holding the transferring facility's registration; and

(D) Retain a copy of CDC Form EA–101 in accordance with § 72.6(d)(3) and § 72.6(d)(4).

(ii) Prior to receiving a select agent listed in Appendix A of this part from a CLIA laboratory, the *requestor* must be registered in accordance with § 72.6(a) and comply with the following requirements:

(A) Provide the following information on the CDC Form EA–101:

(*1*) The name of the requestor and requesting facility;

(*2*) The name of the transferor and transferring facility;

(*3*) The name of the requestor's responsible facility official;

(*4*) The transferring facility's CLIA certification number;

(*5*) The requesting facility's registration number;

(*6*) The name of the agent(s) being shipped;

(*7*) The proposed use of the agent(s); and

(*8*) The quantity (number of containers and amount per container) of the agent(s) being shipped.

(B) Upon receiving the agent, note such receipt on CDC Form EA–101;

(C) Transmit a copy of CDC Form EA–101, signed by the requestor and the responsible facility official representing the requesting facility, to the registering entity holding the requesting facility's registration;

(D) Retain a copy of the CDC Form EA–101 in accordance with §§ 72.6(d)(3) and 72.6(d)(4);

(E) Comply with the disposal requirements of § 72.6(i) and all other sections of this part when subsequently transferring the agent.

(i) *Agent disposal.* (1) Upon termination of the use of the agent, all cultures and stocks of it will be

(i) Securely stored in accordance with prudent laboratory practices,

(ii) Transferred to another registered facility in accordance with this part, or

(iii) Destroyed on-site by autoclaving, incineration, or another recognized sterilization or neutralization process.

(2) When an agent, previously transferred to a facility in accordance with this part, is consumed or destroyed, the responsible facility official must formally notify the registering entity. Formal notification must be noted on CDC Form EA–101 and a copy kept on record by the responsible facility official for a period of five (5) years and is subject to paragraph (g) of this section.

(j) *Definitions.* As used in this section:

Facility means any individual or government agency, university, corporation, company, partnership, society, association, firm, or other legal entity located at a single geographic site that may transfer or receive through any means a select agent subject to this part.

Registering entity means an organization or state agency authorized by the Secretary to register facilities as capable of handling select agents at Biosafety Level 2, 3, or 4, depending on the agent, in accordance with the CDC/NIH publication ''Biosafety in Microbiological and Biomedical Laboratories.''

Requestor means any person who receives or seeks to receive through any means a select agent subject to this part from any other person.

Responsible facility official means an official authorized to transfer and receive select agents covered by this part on behalf of the transferor's and/or requestor's facility. This person should be either a safety officer, a senior management official of the facility, or both. The responsible facility official should not be an individual who actually transfers or receives an agent at the facility.

Secretary means the Secretary of the Department of Health and Human Services or her or his designee.

Select agent means a microorganism (virus, bacterium, fungus, rickettsia)

or toxin listed in Appendix A of this part. The term also includes:

(1) Genetically modified microorganisms or genetic elements from organisms on Appendix A of this part, shown to produce or encode for a factor associated with a disease, and

(2) Genetically modified microorganisms or genetic elements that contain nucleic acid sequences coding for any of the toxins on Appendix A of this part, or their toxic submits.

Single geographic site means a building or complex of buildings at a single mailing address.

Transfer means:

(1) The conveyance or movement from a point or origination to a point of destination either:

(i) From one state or territory to another or;

(ii) Entirely within one contiguous state or territory.

(2) Intrafacility transfers within a registered facility located at a single geographic site are not covered by the provisions of § 72.6 (d), (e), and (f) provided that:

(i) The intended use of the agent remains consistent with that specified in the most current transfer form; and

(ii) For each intrafacility transfer, the facility maintains records that include the name and location of the recipient; the amount of agent transferred, and the date transferred. Such records must be maintained for a period of five (5) years after the date of transfer or for five (5) years after the agents are consumed or properly disposed, whichever is longer.

Transferor means any person who transfers or seeks to transfer through any means a select agent subject to this part to any other person.

[61 FR 55197, Oct. 24, 1996]

§ 72.7 Penalties.

Individuals in violation of this part are subject to a fine of no more than $250,000 or one year in jail, or both. Violations by organizations are subject to a fine or no more than $500,000 per event. A false, fictitious, or fraudulent statement or representation on the Government forms required in the part for registration of facilities or for transfers of select agents is subject to a fine or imprisonment for not more than five years, or both for an individual; and a fine for an organization.

[61 FR 55199, Oct. 24, 1996]

APPENDIX A TO PART 72—SELECT AGENTS

Viruses

1. Crimean-Congo haemorrhagic fever virus
2. Eastern Equine Encephalitis virus
3. Ebola viruses
4. Equine Morbillivirus
5. Lassa fever virus
6. Marburg virus
7. Rift Valley fever virus
8. South American Haemorrhagic fever viruses (Junin, Machupo, Sabia, Flexal, Guanarito)
9. Tick-borne encephalitis complex viruses
10. Variola major virus (Smallpox virus)
11. Venezuelan Equine Encephalitis virus
12. Viruses causing hantavirus pulmonary syndrome
13. Yellow fever virus

Exemptions: Vaccine strains of viral agents (Junin Virus strain candid #1, Rift Valley fever virus strain MP–12, Venezuelan Equine encephalitis virus strain TC–83, Yellow fever virus strain 17–D) are exempt.

Bacteria

1. *Bacillus anthracis*
2. *Brucella abortus, B. melitensis, B. suis*
3. *Burkholderia (Pseudomonas) mallei*
4. *Burkholderia (Pseudomonas) pseudomallei*
5. *Clostridium botulinum*
6. *Francisella tularensis*
7. *Yersinia pestis*

Exemptions: vaccine strains as described in Title 9 CFR, 78.1 are exempt.

Rickettsiae

1. *Coxiella burnetii*
2. *Rickettsia prowazekii*
3. *Rickettsia rickettsii*

Fungi

1. *Coccidioides immitis*

Toxins

1. Abrin
2. Aflatoxins
3. Botulinum toxins
4. *Clostridium perfringens epsilon toxin*
5. Conotoxins
6. Diacetoxyscirpenol
7. Ricin
8. Saxitoxin
9. Shigatoxin
10. Staphylococcal enterotoxins
11. Tetrodotoxin
12. T-2 toxin

Exemptions: Toxins for medical use, inactivated for use as vaccines, or toxin preparations for biomedical research use at an LD_{50}

for vertebrates of more than 100 nanograms per kilogram body weight are exempt. National standard toxins required for biologic potency testing as described in 9 CFR Part 113 are exempt.

RECOMBINANT ORGANISMS/MOLECULES

1. Genetically modified microorganisms or genetic elements from organisms on Appendix A, shown to produce or encode for a factor associated with a disease.

2. Genetically modified microorganisms or genetic elements that contain nucleic acid sequences coding for any of the toxins listed in this Appendix, or their toxic subunits.

OTHER RESTRICTIONS

The deliberate transfer of a drug resistance trait to microorganisms listed in this Appendix that are not known to acquire the trait naturally is prohibited by NIH ''Guidelines for Research Involving Recombinant DNA Molecules,'' if such acquisition could compromise the use of the drug to control these disease agents in humans or veterinary medicine.

ADDITIONAL EXEMPTIONS

1. Products subject to regulation under the Federal Insecticide Fungicide and Rodenticide Act (7 U.S.C. 136 *et seq.*) and the Toxic Substances Control Act (15 U.S.C. 2601 *et seq.*) are exempt.

2. Additional exemptions for otherwise covered strains will be considered when CDC reviews and updates the list of select agents in this Appendix. Individuals seeking an exemption should submit a request to CDC that specifies the agent or strain to be exempted and explains why such an exemption should be granted. Future exemptions will be published in the FEDERAL REGISTER for review and comment prior to inclusion in this Appendix.

[61 FR 55199, Oct. 24, 1996]

PART 75—STANDARDS FOR THE ACCREDITATION OF EDUCATIONAL PROGRAMS FOR AND THE CREDENTIALING OF RADIOLOGIC PERSONNEL

Sec.
75.1 Background and purpose.
75.2 Definitions.
75.3 Applicability.
APPENDIX A TO PART 75—STANDARDS FOR ACCREDITATION OF EDUCATION PROGRAMS FOR RADIOGRAPHERS
APPENDIX B TO PART 75—STANDARDS FOR ACCREDITATION OF DENTAL RADIOGRAPHY TRAINING FOR DENTAL HYGIENISTS
APPENDIX C TO PART 75—STANDARDS FOR ACCREDITATION OF DENTAL RADIOGRAPHY TRAINING FOR DENTAL ASSISTANTS
APPENDIX D TO PART 75—STANDARDS FOR ACCREDITATION OF EDUCATIONAL PROGRAMS FOR NUCLEAR MEDICINE TECHNOLOGISTS
APPENDIX E TO PART 75—STANDARDS FOR ACCREDITATION OF EDUCATION PROGRAMS FOR RADIATION THERAPY TECHNOLOGISTS
APPENDIX F TO PART 75—STANDARDS FOR LICENSING RADIOGRAPHERS, NUCLEAR MEDICINE TECHNOLOGISTS, AND RADIATION THERAPY TECHNOLOGISTS
APPENDIX G TO PART 75—STANDARDS FOR LICENSING DENTAL HYGIENISTS AND DENTAL ASSISTANTS IN DENTAL RADIOGRAPHY

AUTHORITY: Sec. 979 of the Consumer-Patient Radiation Health and Safety Act of 1981, Pub. L. 97–35, 95 Stat. 599–600 (42 U.S.C. 10004).

SOURCE: 50 FR 50717, Dec. 11, 1985, unless otherwise noted.

§ 75.1 Background and purpose.

(a) The purpose of these regulations is to implement the provisions of section 979 of the Consumer-Patient Radiation Health and Safety Act of 1981, 42 U.S.C. 10004, which requires the establishment by the Secretary of Health and Human Services of standards for the accreditation of programs for the education of certain persons who administer radiologic procedures and for the credentialing of such persons.

(b) Section 979 requires the Secretary, after consultation with specified Federal agencies, appropriate agencies of States, and appropriate professional organizations, to promulgate by regulation the minimum standards described above. These standards distinguish between the occupations of (1) radiographer, (2) dental hygienist, (3) dental assistant, (4) nuclear medicine technologist, and (5) radiation therapy technologist. In the interest of public safety and to prevent the hazards of improper use of medical radiation identified by Congress in its determination of the need for standards, the Secretary is also authorized to prepare standards for other occupational groups utilizing ionizing and non-ionizing radiation as he/she finds appropriate. However, the standards set out below are limited to the five occupational groups listed above, utilizing ionizing radiation. Nothing in these accreditation standards is intended to discriminate against proprietary schools.

§ 75.2 Definitions.

All terms not defined herein shall have the meaning given them in the Act. As used in this part:

Accreditation, as applied to an educational program, means recognition, by a State government or by a nongovernmental agency or association, of a specialized program of study as meeting or exceeding certain established qualifications and educational standards. As applied to a health care or educational institution, *accreditation* means recognition, by a State government or by a nongovernmental agency or association, of the institution as meeting or exceeding certain established standards or criteria for that type of institution.

Act means the Consumer-Patient Radiation Health and Safety Act of 1981, 42 U.S.C. 10001–10008.

Continuing competency means the maintenance of knowledge and skills and/or demonstrated performance that are adequate and relevant to professional practice needs.

Credentialing means any process whereby a State Government or nongovernmental agency or association grants recognition to an individual who meets certain predetermined qualifications.

Dental hygienist means a person licensed by the State as a dental hygienist.

Dental assistant means a person other than a dental hygienist who assists a dentist in the care of patients.

Educational program means a set of formally structured activities designed to provide students with the knowledge and skills necessary to enter an occupation, with evaluation of student performance according to predetermined objectives.

Energized laboratory means any facility which contains equipment that generates ionizing radiation. This does not include facilities for training students when the equipment is not powered to emit ionizing radiation, e.g., practice in setting controls and positioning of patients.

Formal training means training or education, including either didactic or clinical practicum or both, which has a specified objective, planned activities for students, and suitable methods for measuring student attainment, and which is offered, sponsored, or approved by an organization or institution which is able to meet or enforce these criteria.

Ionizing radiation means any electromagnetic or particulate radiation (X-rays, gamma rays, alpha and beta particles, high speed electrons, neutrons, and other nuclear particles) which interacts with atoms to produce ion pairs in matter.

Licensed practitioner means a licensed doctor of medicine, osteopathy, dentistry, podiatry, or chiropractic.

Licensure means the process by which an agency of State government grants permission to persons meeting predetermined qualifications to engage in an occupation.

Nuclear medicine technologist means a person other than a licensed practitioner who prepares and administers radio-pharmaceuticals to human beings and conducts *in vivo* or *in vitro* detection and measurement of radioactivity for medical purposes.

Permit means an authorization issued by a State for specific tasks or practices rather than the entire scope of practice in an occupation.

Radiation therapy technologist means a person other than a licensed practitioner who utilizes ionizing radiation-generating equipment for therapeutic purposes on human subjects.

Radiographer means an individual other than a licensed practitioner who (1) performs, may be called upon to perform, or who is licensed to perform a comprehensive scope of diagnostic radiologic procedures employing equipment which emits ionizing radiation, and (2) is delegated or exercises responsibility for the operation of radiation-generating equipment, the shielding of patient and staff from unnecessary radiation, the appropriate exposure of radiographs, or other procedures which contribute to any significant extent to the site or dosage of ionizing radiation to which a patient is exposed. Radiographers are distinguished from personnel whose use of diagnostic procedures is limited to a few specific body sites and/or standard procedures, from those personnel in other clinical specialties who may occasionally be

called upon to assist in diagnostic radiology, and from those technicians or assistants whose activities do not, to any significant degree, determine the site or dosage of radiation to which a patient is exposed.

Radiologist means a physician certified in radiology by the American Board of Radiology or the American Osteopathic Board of Radiology.

§ 75.3 Applicability.

(a) *Federal Government.* Except as provided in section 983 of the Act, the credentialing standards set out in the Appendixes to this part apply to those individuals who administer or propose to administer radiologic procedures, in each department, agency and instrumentality of the Federal Government as follows:

(1) *Radiographer Standards* apply to all individuals who are radiographers as defined in § 75.2 and who are not practitioners excepted by the Act.

(2) *Nuclear Medicine Technologist Standards* apply to all individuals who are nuclear medicine technologists as defined in § 75.2, who perform *in vivo* nuclear medicine procedures, and who are not practitioners excepted by the Act. For purposes of this Act, any administration of radiopharmaceuticals to human beings is considered an *in vivo* procedure.

(3) *Radiation Therapy Technologist Standards* apply to all individuals who perform radiation therapy and who are not practitioners excepted by the Act.

(4) *Dental Hygienist Standards* apply to all dental hygienists who perform dental radiography.

(5) *Dental Assistant Standards* apply to all dental assistants who perform dental radiography.

(6) The following persons are deemed to have met the requirements of these standards:

(i) Persons employed by the Federal government as radiologic personnel prior to the effective date of this regulation and who show evidence of current or fully satisfactory performance or certification of such from a licensed practitioner:

(ii) Uniformed military personnel who receive radiologic training from or through the Armed Forces of the United States and who meet standards established by the Department of Defense or components thereof, provided that those standards are determined by such Department or component to offer equivalent protection of patient health and safety:

(iii) Foreign national employed by the Federal government in positions outside of the United States who show evidence of training, experience, and competence determined by the employing agency to be equally protective of patients health and safety; and

(iv) Persons first employed by the Federal government as radiologic personnel after the effective date of this regulation who (*a*) received training from institutions in a State or foreign jurisdiction which did not accredit training in that particular field at the time of graduation, or (*b*) practiced in a State or foreign jurisdiction which did not license that particular field or which did not allow special eligibility to take a licensure examination for those who did not graduate from an accredited educational program; provided that such persons show evidence of training, experience, and competence determined by the Office of Personnel Management or the employing agency to be equally protective of patient health and safety.

(7) The following persons are exempted from these standards:

(i) Persons who are trained to perform, or perform, covered radiologic procedures in emergency situations which preclude use of fully qualified personnel; and

(ii) Students in approved training programs.

(8) A department, agency, or instrumentality of the Federal government may, after consultation with the Secretary, use alternative criteria which it determines would offer equivalent protection of patient health and safety.

(b) *States.* The States may, but are not required to, adopt standards for accreditation and credentialing that are consistent with the standards set out in the appendixes to this part.

APPENDIX A TO PART 75—STANDARDS FOR ACCREDITATION OF EDUCATIONAL PROGRAMS FOR RADIOGRAPHERS

A. Description of the Profession

The radiographer shall perform effectively by:

1. Applying knowledge of the principles of radiation protection for the patient, self, and others.
2. Applying knowledge of anatomy, positioning, and radiographic techniques to accurately demonstrate anatomical structures on a radiograph.
3. Determining exposure factors to achieve optimum radiographic technique with a minimum of radiation exposure to the patient.
4. Examining radiographs for the purpose of evaluating technique, positioning, and other pertinent technical qualities.
5. Exercising discretion and judgment in the performance of medical imaging procedures.
6. Providing patient care essential to radiologic procedures.
7. Recognizing emergency patient conditions and initiating lifesaving first aid.

B. Sponsorship

1. Accreditation will be granted to the institution that assumes primary responsibility for curriculum planning and selection of course content; coordinates classroom teaching and supervised clinical education; appoints faculty to the program; receives and processes applications for admission; and grants the degree or certificate documenting completion of the program.
2. Educational programs may be established in:
(a) Community and junior colleges, senior colleges, and universities;
(b) Hospitals;
(c) Medical schools;
(d) Postsecondary vocational/technical schools and institutions; and
(e) Other acceptable institutions which meet comparable standards.
3. The sponsoring institutions and affiliate(s) must be accredited by a recognized agency. When the sponsoring institution and affilitate(s) are not so recognized, they may be considered as meeting the requirements of accreditation if the institution meets or exceeds established equivalent standards.

C. Instructional Facilities

1. *General.* Appropriate classroom and clinical space, modern equipment, and supplies for supervised education shall be provided.
2. *Laboratory.* Energized laboratories utilized for teaching purposes shall be certified as required for compliance with Federal and/or State radiation safety regulations. The use of laboratories shall be governed by established educational objectives.
3. *Reference Materials.* Adequate up-to-date scientific books, periodicals, and other reference materials related to the curriculum and profession shall be readily accessible to students.

D. Clinical Education

1. The clinical phase of the educational program shall provide an environment for supervised competency-based clinical education and experience and offer a sufficient and well-balanced variety of radiographic examinations and equipment.
2. An acceptable ratio of students to registered technologists shall be maintained in the clinical teaching environment.
3. A clinical instructor(s), who shall be responsible for supervising students according to objectives, shall be identified for each primary clinical education center.
4. The maximum student enrollment shall not exceed the capacity recommended on the basis of volume and variety of radiographic procedures, resources, and personnel available for teaching purposes.
5. In programs where didactic and clinical experience are not provided in the same institution, accreditation shall be given only to the institution responsible for admissions, curriculum, and academic credit. The accredited institution shall be responsible for coordinating the program and assuring that the activities assigned to the students in the clinical setting are educational. There shall be a uniform contract between the accredited institution and each of its affiliate hospitals, clearly defining the responsibilities and obligations of each.

E. Curriculum

1. The structure of the curriculum shall be based on not less than two calendar years of full-time study or its equivalent.
2. Instruction shall follow a planned outline that includes:
(a) The assignment of appropriate instructional materials;
(b) Classroom presentations, discussions and demonstrations; and
(c) Examinations in the didactic and clinical aspects of the program.
3. All professional courses, including clinical education, must include specific curriculum content that shall include, but shall not be limited to:
(a) Introduction to radiologic technology;
(b) Medical ethics;
(c) Imaging;
(d) Radiographic processing technique;
(e) Human structure and function;
(f) Medical terminology;
(g) Principals of radiographic exposure;
(h) Radiographic procedures;
(i) Principles of radiation protection;
(j) Radiographic film evaluation;
(k) Methods of patient care;

(l) Pathology;

(m) Radiologic physics; and

(n) Radiation biology.

Related subjects added to the professional curriculum shall meet the requirements of the degree-granting institution.

F. Finances

Financial resources for operation for the educational program shall be assured through regular budgets, gifts, grants, endowments, or fees.

G. Faculty

1. *Program Director.* A program director shall be designated who is credentialed in radiography. The program director's responsibilities in teaching, administration, and coordination of the educational program in radiography shall not be adversely affected by educationally unrelated functions.

(a) *Minimum qualifications.* A minimum of two years of professional experience and proficiency in instructing, curriculum design, program planning, and counseling.

(b) *Responsibilities.* (1) The program director, in consultation with the medical director/advisor (G. 2.) shall be responsible for the organization, administration, periodic review, records, continued development, and general policy and effectiveness of the program.

(2) Opportunities for continuing education shall be provided for all faculty members.

2. *Medical Director/Medical Advisor*—(a) *minimum qualifications.* The medical director/medical advisor shall be a qualified radiologist, certified by the American Board of Radiology, or shall possess suitable equivalent qualifications.

(b) *Responsibilities.* The medical director/medical advisor shall work in consultation with the program director in developing the goals and objectives of the program and implementing the standards for their achievement.

3. *Instructors.* All instructors shall be qualified through academic preparation and experience to teach the assigned subjects.

H. Students

ADMISSION

(a) Candidates for admission shall satisfy the following minimum requirements: Completion of four years of high school; successful completion of a standard equivalency test; or certification of equivalent education by an organization recognized by the United States Department of Education. Courses in physics, chemistry, biology, algebra, and geometry are strongly recommended.

(b) The number of students enrolled in each class shall be commensurate with the most effective learning and teaching practices and should also be consistent with acceptable student-teacher ratios.

I. Records

Records shall be maintained as dictated by good educational practices.

NOTE: Educational programs accredited by an organization recommended by the United States Department of Education are considered to have met these standards.

APPENDIX B TO PART 75—STANDARDS FOR ACCREDITATION OF DENTAL RADIOGRAPHY TRAINING FOR DENTAL HYGIENISTS

A. Sponsorship

Sponsorship must be by an entity that assumes primary responsibility for the planning and conduct of competency-based didactic and clinical training in dental radiography.

1. This responsibility must include: defining the curriculum in terms of program goals, instructional objectives, learning experiences designed to achieve goals and objectives, and evaluation procedures to assess attainment of goals and objectives; coordinating classroom teaching and supervised clinical experiences; appointing faculty; receiving and processing applications for admission; and granting documents of successful completion of the program.

2. The formal training in dental radiography may be a part of a total program of dental hygiene education accredited by an organization recognized by the United States Department of Education.

3. The sponsoring entity and the dental radiography training must be approved by the State entity responsible for approving dental hygiene education programs or the State entity responsible for credentialing dental personnel in radiography.

B. Curriculum

Dental radiography training for dental hygienists must provide sufficient content and instructional time to assure competent performance.

1. The dental radiography curriculum content and learning experiences must include the theoretical aspects of the subject as well as practical application of techniques. The theoretical aspects should provide content necessary for dental hygienists to understand the critical nature of the radiological procedures they perform and of the judgments they make as related to patient and operator radiation safety.

2. The dental radiography curriculum must include content in seven areas: radiation physics; radiation biology; radiation health,

safety, and protection; X-ray films and radiographic film quality; radiographic techniques; darkroom and processing techniques; and film mounting.

—*Radiation Physics.* Curriculum content should include: historical background; role of radiology in modern dentistry; types of radiation; X-ray production principles; operation of X-ray equipment; properties of X-radiation; and X-radiation units, detection and monitoring devices.

—*Radiation Biology.* Curriculum content should include: Interaction of ionizing radiation with cells, tissues, and matter; factors influencing biological response of cells and tissues to ionizing radiation; somatic and genetic effects of radiation exposure; and cumulative effects of X-radiation and latent period.

—*Radiation Health, Safety, and Protection.* Curriculum content should include: Sources and types of radiation exposure; public health implications and public concerns; principles of radiological health including collimation and filtration; radiation protection methods in the dental office; necessity for high diagnostic yield with a reduction of X-radiation exposure; and monitoring devices.

—*X-ray Films and Radiographic Film Quality.* Curriculum content should include: X-radiation production and scatter; X-ray beam quality and quantity; factors influencing radiographic density, contrast, definition, and distortion; film characteristics; dosage related to film speed; types of films, cassettes, and screens; and film identification systems.

—*Radiographic Techniques.* Curriculum content should include: imagery geometry; patient positioning; film/film holder positioning; cone positioning and exposure settings for the intraoral paralleling technique, bisecting the angle technique, and techniques for occlusal radiographs; extaroral panoramic techniques; and patient variations that affect the above techniques.

—*Darkroom and Processing Techniques.* Curriculum content should include: solution chemistry and quality maintenance; darkroom equipment and safe lighting; film processing techniques; automatic film processing; and processing errors.

—*Film Mounting.* Curriculum content should include: anatomical landmarks essential to mounting films; film mounting procedures; and diagnostic quality of radiographs.

3. The curriculum must also include clinical practice assignments.

—Clinical practice assignments must be an integral part of the curriculum so that Dental Hygienists have the opportunity to develop competence in making radiographs. Faculty supervision must be provided during a student's radiographic technique experience. Students must demonstrate competence in making diagnostically acceptable radiographs prior to their clinical practice where there is not direct supervision by faculty.

—Dental hygienists must demonstrate knowledge of radiation safety measures before making radiographs and, where possible, should demonstrate competence on manikins before making radiographs on patients. Radiographs must be exposed for diagnostic purposes and not solely to demonstrate techniques or obtain experience.

—The clinical experience should provide opportunity to make a variety of radiographs and radiographic surveys including primary, mixed, and permanent dentitions, as well as edentulous and partially edentulous patients.

C. Student Evaluation

Evaluation procedures must be developed to assess performance and achievement of dental radiography program objectives.

D. Faculty

The dental radiography training must be conducted by faculty who are qualified in the curriculum subject matter.

1. This may include a D.D.S./D.M.D. degree; graduation from an accredited dental assisting or dental hygiene education program with a certificate or an associate or baccalaureate degree; status as a Certified Dental Assistant certified by the Dental Assisting National Board; or recognition as equivalently qualified by the State entity which approved the training program in dental radiography.

2. The faculty-to-student ratio must be adequate to achieve the stated objectives of the curriculum.

E. Facilities

Adequate radiographic facilities must be available to permit achievement of the dental radiography training objectives. The design, location, and construction of radiographic facilities must provide optimum protection from X-radiation for patients and operators. Equipment shall meet State and Federal laws related to radiation. Monitoring devices shall be worn by dental personnel. Lead aprons must be placed to protect patients. Safe storage for films must be provided. Darkroom facilities and equipment must be available and of a quality that assures that films will not be damaged or lost.

F. Learning Resources

A wide range of printed materials, instructional aids, and equipment must be available to support instruction. Current specialized reference texts should be provided; and models, replicas, slides, and films which depict

current techniques should be available for use in instruction. As appropriate self-instructional materials become available, they should be provided for the student's use.

NOTE: Educational programs accredited by an organization recognized by the United States Department of Education are considered to have met these standards. Under existing licensure provisions in all States, becoming a dental hygienist requires graduation from a dental hygiene education program accredited by an organization recognized by the United States Department of Education. In lieu of this requirement, Alabama accepts graduation from a State-approved preceptorship program.

APPENDIX C TO PART 75—STANDARDS FOR ACCREDITATION OF DENTAL RADIOGRAPHY TRAINING FOR DENTAL ASSISTANTS

A. Sponsorship

Sponsorship must be an entity that assumes primary responsibility for the planning and conduct of competency-based didactic and clinical training in dental radiography.

1. This responsibility must include: Defining the curriculum in terms of program goals, instructional objectives, learning experiences designed to achieve goals and objectives, and evaluation procedures to assess attainment of goals and objectives; coordinating classroom teaching and supervised clinical experiences; appointing faculty; receiving and processing applications for admission; and granting documents of successful completion of the program.

2. Dental radiography training may be freestanding (as a continuing education course offered by State dental/dental auxiliary societies, or by dental/dental auxiliary education programs); or be a part of an educational program in dental assisting. Such dental assisting education programs may be accredited by an organization recognized by the United States Department of Education; or located in a school accredited by an institutional accrediting agency recognized by the the United States Department of Education or approved by the State agency responsible for secondary and postsecondary education, or approved by a Federal agency conducting dental assistant education in that Agency.

3. The sponsoring entity and the dental radiography training must be approved by the State entity responsible for approving dental assisting education programs, or the State entity responsible for credentialing dental personnel in radiography.

B. Curriculum

Dental radiography training for dental assistants must provide sufficient content and instructional time to assure competent performance.

1. The dental radiography curriculum content and learning experiences must include the theoretical aspects of the subject as well as practical application of techniques. The theoretical aspects should provide content necessary for dental assistants to understand the critical nature of the radiological procedures they perform and of the judgments they make as related to patient and operator radiation safety.

2. The dental radiography curriculum must include content in seven areas: radiation physics; radiation biology; radiation health, safety, and protection; X-ray films and radiographic film quality; radiographic techniques; darkroom and processing techniques; and film mounting.

—*Radiation Physics.* Curriculum content should include: Historical background; role of radiology in modern dentistry; types of radiation; X-ray production principles; operation of X-ray equipment; properties of X-radiation; and X-radiation units, detection and monitoring devices.

—*Radiation Biology*. Curriculum content should include: interaction of ionizing radiation with cells, tissues, and matter; factors influencing biological response of cells and tissues to ionizing radiation; somatic and genetic effects of radiation exposure; and cumulative effects of X-radiation and latent period.

—*Radiation Health, Safety, and Protection*. Curriculum content should include: sources and types of radiation exposure; public health implications and public concerns; principles of radiological health including collimation and filtration; radiation protection methods in the dental office; necessity for high diagnostic yield with a reduction of X-radiation exposure; and monitoring devices.

—*X-ray Films and Radiographic Film Quality*. Curriculum content should include: X-radiation production and scatter; X-ray beam quality and quantity; factors influencing radiographic density, contrast, definition, and distortion; film characteristics; dosage related to film speed; types of films, cassettes, and screens; and film identification systems.

—*Radiographic Techniques.* Curriculum content should include: imagery geometry; patient positioning; film/film holder positioning; cone positioning and exposure settings for the intraoral paralleling technique, bisecting the angle technique, and techniques for occlusal radiographs; extraoral panoramic techniques; and patient variations that affect the above techniques.

—*Darkroom and Processing Techniques.* Curriculum content should include: Solution chemistry and quality maintenance; darkroom equipment and safe lighting; film processing techniques; automatic film processing; and processing errors.

—*Film Mounting.* Curriculum content should include: anatomical landmarks essential to mounting films; film mounting procedures; and diagnostic quality of radiographs.

3. The curriculum must also include clinical practice assignments.

—Clinical practice assignments must be an integral part of the curriculum so that Dental Assistants have the opportunity to develop competence in making radiographs. The clinical experience may be conducted in the dental office in which the Dental Assistant is employed or is serving an externship. Faculty and/or employing dentist supervision must be provided during a student's radiographic technique experience. Students must demonstrate competence in making diagnostically acceptable radiographs prior to their clinical practice when there is not direct supervision by faculty and/or the employing dentist.

—Dental Assistants must demonstrate knowledge of radiation safety measures before making radiographs, and where possible should demonstrate competence on manikins before making radiographs on patients. Radiographs must be exposed for diagnostic purposes and not solely to demonstrate techniques or obtain experience.

—The clinical experience should provide opportunity to make a variety of radiographs and radiographic surveys, including primary, mixed, and permanent dentitions, as well as edentulous and partially edentulous patients.

C. Student Evaluation

Evaluation procedures must be developed to assess performance and achievement of dental radiography program objectives.

D. Faculty

The dental radiography training must be conducted by faculty who are qualified in the curriculum subject matter.

1. This may include a D.D.S./D.M.D. degree; graduation from an accredited dental assisting or dental hygiene education program with a certificate or an associate or baccalaureate degree; status as a Certified Dental Assistant certified by the Dental Assisting National Board; or recognition as equivalently qualified by the State entity (or Federal agency where appropriate) which approves the educational program in dental radiography.

2. The faculty-to-student ratio must be adequate to achieve the stated objectives of the curriculum.

E. Facilities

Adequate radiographic facilities must be available to permit achievement of the dental radiography training objectives. The design, location, and construction of radiographic facilities must provide optimum protection from X-radiation for patients and operators. Equipment shall meet State and Federal laws related to radiation. Monitoring devices shall be worn by dental personnel. Lead aprons must be placed to protect patients. Safe storage for films must be provided. Darkroom facilities and equipment must be available and of a quality that assures that films will not be damaged or lost.

F. Learning Resources

A wide range of printed materials, instructional aids, and equipment must be available to support instruction. Current specialized reference texts should be provided; and models, replicas, slides, and films which depict current techniques should be available for use in instruction. As appropriate self-instructional materials become available, they should be provided for the student's use.

NOTE: Educational programs accredited by an organization recognized by the United States Department of Education are considered to have met these standards.

APPENDIX D TO PART 75—STANDARDS FOR ACCREDITATION OF EDUCATIONAL PROGRAMS FOR NUCLEAR MEDICINE TECHNOLOGISTS

A. Sponsorship

1. Accreditation will be granted to the institution that assumes primary responsibility for curriculum planning and selection of course content; coordinates classroom teaching and supervised clinical education; appoints faculty to the program; receives and processes applications for admission; and grants the degree or certificate documenting completion of the program.

2. Educational programs may be established in:

(a) Community and junior colleges, senior colleges, and universities;

(b) Hospitals and clinics;

(c) Laboratories;

(d) Medical schools;

(e) Postsecondary vocational/technical schools and institutions; and

(f) Other acceptable institutions which meet comparable standards.

3. The sponsoring institution and affiliate(s) must be accredited by a recognized agency. When the sponsoring institution and affiliate(s) are not so recognized, they may be considered as meeting the requirements of accreditation if the institution meets or exceeds established equivalent standards.

4. Responsibilities of the sponsor and each affiliate for program administration, instruction, supervision, etc., must be carefully described in written affiliation agreements.

B. Curriculum

Instruction must follow a plan which documents:

1. A structured curriculum including clinical education with clearly written syllabi which describe learning objectives and competencies to be achieved. The curriculum shall be based on not less than one calendar year of full-time study or its equivalent.

2. The minimum professional curriculum that includes the following:

(a) Methods of patient care;

(b) Radiation safety and protection;

(c) Nuclear medicine physics;

(d) Radiation physics;

(e) Nuclear instrumentation;

(f) Statistics;

(g) Radionuclide chemistry;

(h) Radiopharmacology;

(i) Departmental organization and function;

(j) Radiation biology;

(k) Nuclear medicine *in vivo* and *in vitro* procedures;

(l) Radionuclide therapy;

(m) Computer applications; and

(n) Clinical practicum.

3. Assignment of appropriate instructional materials.

4. Classroom presentations, discussions, and demonstrations.

5. Supervised practice, experience, and discussions. This shall include the following:

(a) Patient care and patient recordkeeping;

(b) Participation in the quality assurance program;

(c) The preparation, calculation, identification, administration, and disposal of radiopharmaceuticals;

(d) Radiation safety techniques that will minimize radiation exposure to the patient, public, fellow workers, and self;

(e) The performance of an adequate number and variety of imaging and non-imaging procedures; and

(f) Clinical correlation of nuclear medicine procedures.

6. Evaluation of student's knowledge, problem-solving skills, and motor and clinical competencies.

7. The competencies necessary for graduation.

C. Resources

1. The program must have qualified program officials. Primary responsibilities shall include program development, organization, administration, evaluation, and revision. The following program officials must be identified:

(a) *Program Director*—(1) *Responsibilities.* The program director of the educational program shall have overall responsibility for the organization, administration, periodic review, continued development, and general effectiveness of the program. The director shall provide supervision and coordination to the instructional staff in the academic and clinical phases of the program. Regular visits to the affiliates by the program director must be scheduled.

(2) *Qualifications.* The program director must be a physician or nuclear medicine technologist. The program director must demonstrate proficiency in instruction, curriculum design, program planning, and counseling.

(b) *Medical Director*— (1) *Responsibilities.* The medical director of the program shall provide competent medical direction and shall participate in the clinical instruction. In multiaffiliate programs each clinical affiliate must have a medical director.

(2) *Qualifications.* The medical director must be a physician qualified in the use of radionuclides and a diplomate of the American Board(s) of Nuclear Medicine, or Pathology, or Radiology, or possess suitable equivalent qualifications.

(c) *Clinical Supervisor.* Each clinical affiliate must appoint a clinical supervisor.

(1) *Responsibilities.* The clinical supervisor shall be responsible for the clinical education and evaluation of students assigned to that clinical affiliate.

(2) *Qualifications.* The clinical supervisor must be a technologist credentialed in nuclear medicine technology.

2. *Instructional Staff*—(a) *Responsibilities.* The instructional staff shall be responsible for instruction in the didactic and/or clinical phases of the program. They shall submit course outlines for each course assigned by the program director; evaluate students and report progress as required by the sponsoring institution; and cooperate with the program director in the periodic review and upgrading of course material.

(b) *Qualifications.* The instructors must be qualified, knowledgeable, and effective in teaching the subjects assigned.

(c) *Instructor-to-student ratio.* The instructor-to-student ratio shall be adequate to achieve the stated objectives of the curriculum.

(d) *Professional development.* Accredited programs shall assure continuing education in the health profession or occupation and ongoing instruction for the faculty in curriculum design and teaching techniques.

3. Financial resoures for continued operation of the educational program must be assured.

4. *Physical Resources.* (a) *General.* Adequate classrooms, laboratories, and other facilities shall be provided.

(b) *Equipment and Supplies.* Modern nuclear medicine equipment, accurately calibrated, in working order, and meeting applicable Federal and State standards, if any, must be available for the full range of diagnostic and therapeutic procedures as outlined in the curriculum.

(c) *Reference Materials.* Reference materials appropriate to the curriculum shall be readily accessible to students.

(d) *Records.* Records shall be maintained as dictated by good educational practices.

5. *Instructional Resources.* Instructional aids such as clinical materials, reference materials, demonstration and other multimedia materials must be provided.

D. Students

ADMISSION REQUIREMENTS

Persons admitted into nuclear medicine technology programs shall have completed high school or its equivalent. They shall have completed postsecondary courses in the following areas:

(1) Human anatomy and physiology;
(2) Physics;
(3) Mathematics;
(4) Medical terminology;
(5) Oral and written communications;
(6) General chemistry; and
(7) Medical ethics.

Prerequisites may be completed during nuclear medicine training. Educational institutions such as junior colleges, universities, and technical vocational institutes may provide these prerequisite courses as part of an integrated program in nuclear medicine technology (i.e., two to four years).

E. Operational Policies

Students may not take the responsibility nor the place of qualified staff. However, students may be permitted to perform procedures after demonstrating proficiency, with careful supervision.

F. Continuing Program Evaluation

1. Periodic and systematic review of the program's effectiveness must be documented.

2. One element of program evaluation shall be the initial employment of graduates of the program.

NOTE: Educational programs accredited by an organization recognized by the United States Department of Education are considered to have met these standards.

APPENDIX E TO PART 75—STANDARDS FOR ACCREDITATION OF EDUCATIONAL PROGRAMS FOR RADIATION THERAPY TECHNOLOGISTS

A. Sponsorship

1. Educational programs may be established in:

(a) Community and junior colleges, senior colleges, and universities;

(b) Hospitals, clinics, or autonomous radiation oncology centers meeting the criteria for major cancer management centers or meeting demonstrably equivalent standards;

(c) Medical schools; and

(d) Postsecondary vocational/technical schools and institutions.

2. The sponsoring institution and affiliates, if any, must be accredited by recognized agencies or meet equivalent standards. When more than one clinical education center is used, each must meet the standards of a major cancer management center.

3. When didactic preparation and supervised clinical education are not provided in the same institution, accreditation must be obtained by the sponsoring institution for the total program. This institution will be the one responsible for admission, curriculum, and academic credit. The accredited institution shall be responsible for coordinating the program and assuring that the activities assigned to the student in the clinical setting are educational. There shall be a uniform, written, affiliation agreement between the accredited institution and each clinical education center, clearly defining the responsibilities and obligations of each.

B. Curriculum

Educational programs of 24 months and 12 months or their equivalents may be developed. A 24-month program shall admit those candidates with a high school diploma (or equivalent) as outlined in D.1. The 12-month program shall be designed for those students admitted with backgrounds as outlined in D.2.

Instruction must follow a plan which documents:

1. A structured curriculum with clearly written course syllabi which describe competencies and learning objectives to be achieved. The curriculum shall include but not necessarily be limited to the following:

(a) Orientation to radiation therapy technology;
(b) Medical ethics and law;
(c) Methods of patient care;
(d) Medical terminology;
(e) Human structure and function;

(f) Oncologic pathology;
(g) Radiation oncology;
(h) Radiobiology;
(i) Mathematics;
(j) Radiation physics;
(k) Radiation protection;
(l) Radiation oncology technique;
(m) Radiographic imaging; and
(n) Clinical dosimetry.

The curriculum must include a plan for well-structured competency-based clinical education.

2. Assignment of appropriate instructional materials.

3. Classroom presentations, discussions, and demonstrations.

4. Supervised clinical education and laboratory practicum.

5. Evaluation of students to assess knowledge, problem-solving skills, and motor and clinical competencies.

6. Program graduates must demonstrate competencies including, but not limited to, the following:

(a) Practice oral and written communications;

(b) Maintain records of treatment administered;

(c) Perform basic mathematical functions;

(d) Demonstrate knowledge of human structure, function, and pathology;

(e) Demonstrate knowledge of radiation physics in radiation interactions and radiation protection techniques;

(f) Provide basic patient care and cardiopulmonary resuscitation;

(g) Deliver a planned course of radiation therapy;

(h) Verify physician's prescribed course of radiation therapy and recognize errors in computation;

(i) Demonstrate awareness of patterns of physical and emotional stress exhibited by patients;

(j) Produces and utilize immobilization and beam directional devices;

(k) Prepare commonly used brachytherapy sources;

(l) Demonstrate knowledge of methods of calibration of equipment, and quality assurance;

(m) Prepare isodose summations;

(n) Detect malfunctioning equipment;

(o) Apply rules and regulations for radiation safety, and detect defects which might pose a radiation hazard;

(p) Understand the function of equipment and accessories;

(q) Demonstrate knowledge of methods of continuing patient evaluation (follow up);

(r) Apply wedge and compensating filters;

(s) Recognize patients' clinical progress, complications, and demonstrate knowledge of when to withhold treatment until consultation with the physician; and

(t) Interact with patients and families concerning the physical and psychological needs of patients.

C. Resources

1. *Program Officials.* The program must have a qualified program official or officials. Primary responsibilities shall include program development, organization, administration, evaluation, and revision. A program director is necessary; other program officials may be required.

(a) *Program Director*—(1) *Responsibilities.*

—The director of the educational program shall be responsible for the organization, administration, periodic review, continued development, and general effectiveness of the program. The program director's responsibilities in teaching, administration, and coordination of the educational program in radiation therapy technology shall not be adversely affected by educationally unrelated functions.

—In a college-sponsored program, or a hospital-sponsored multiple affiliate program, the program director shall be a employee of the sponsoring institution. A schedule of regular affiliate visits must be maintained.

(2) *Qualifications.*

—Must be a technologist qualified in radiation therapy technology and educational methodologies.

—Must be credentialed in radiation therapy technology or possess suitable equivalent qualifications.

—Must have at least two years' experience as an instructor in an accredited educational program.

(b) *Clinical Supervisor.* Each clinical education center shall appoint a clinical supervisor.

(1) *Responsibilities.* The clinical supervisor shall be responsible for the clinical education and evaluation of students assigned to that clinical education center.

(2) *Qualifications.* Must be a technologist, with suitable experience, qualified in radiation therapy technology and educational methodologies and must be credentialed in radiation therapy technology.

(c) *Medical Director/Medical Advisor*—

(1) *Responsibilities.* The medical director/medical advisor shall work in consultation with the program director in developing the goals and objectives of the program and implementing the standards for achievement.

(2) *Qualifications.* The medical director/medical advisor shall be a qualified radiation oncologist certified by the American Board of Radiology, or shall possess suitable equivalent qualifications.

2. *Instructional Staff*— (a) *Responsibilities.* The instructional staff shall be responsible for submitting course outlines for each course assigned by the program director; evaluating students and reporting progress

as required by the sponsoring institution; and cooperating with the program director in the periodic review and upgrading of course material.

(b) *Qualifications.* The instructors must be individually qualified, must be effective in teaching the subjects assigned, and must meet the standards required by the sponsoring institution.

(c) *Instructor-to-Student Ratio.* The instructor-to-student ratio shall be adequate to achieve the stated objectives of the curriculum.

(d) *Professional Development.* Programs shall have a policy that encourages continuing education in radiation therapy technology and assures ongoing instruction for the faculty in curriculm design and teaching strategies.

3. *Financial Resources.* Financial resources for continued operation of the educational program must be assured.

4. *Physical Resources*—(a) *General.* Adequate classrooms, laboratories, and other facilities shall be provided. All affiliated institutions shall provide space required for these facilities.

(b) *Equipment and Supplies.* Appropriate modern equipment and supplies in sufficient quantities shall be provided.

(c) *Laboratory.* Energized laboratories must meet Federal and/or State radiation and safety regulations.

(d) *Reference Materials.* An adequate supply of up-to-date books, periodicals, and other reference materials related to the curriculum and the profession shall be readily available to students.

(e) *Records.* Records shall be maintained as dictated by good educational practices.

5. *Instructional Resources.* Instructional aids such as clinical materials, reference materials, and demonstration and other multimedia materials must be provided.

D. Students

ADMISSION

1. Applicants must be high school graduates (or equivalent) with an educational background in basic science and mathematics.

2. For admission to a 12-month program, the candidate must satisfy one of the following requirements:

(a) Graduation from an accredited or equivalent program in radiography.

(b) Successful completion or challenge of courses in the following prerequisite content areas:

—Radiation physics;
—Human structure and function;
—Radiation protection;
—Medical ethics and law;
—Methods of patient care;
—Medical terminology; and
—Mathematics.

(c) Successful demonstration of the following competencies:

—Practice oral and written communications;
—Perform basic mathematical functions;
—Demonstrate knowledge of human structure and function;
—Demonstrate knowledge of radiation physics in radiation interactions and radiation protection techniques;
—Provide basic patient care and cardiopulmonary resuscitation;
—Demonstrate awareness of patterns of physical and emotional stress exhibited by patients;
—Apply rules and regulations for radiation safety, detect defects which might pose a radiation hazard, and maintain control, if a radiation accident occurs; and
—Interact with patients and families concerning patients physical and psychological needs.

E. Continuing Program Evaluation

1. A process for periodic and systematic review of the program's effectiveness must be documented and reflected in policies.

2. Program evaluation shall include the employment performance of recent graduates.

NOTE: Educational programs accredited by an organization recognized by the United States Department of Education are considered to have met these standards.

APPENDIX F TO PART 75—STANDARDS FOR LICENSING RADIOGRAPHERS, NUCLEAR MEDICINE TECHNOLOGISTS, AND RADIATION THERAPY TECHNOLOGISTS

The following section describes basic elements to be incorporated in credentialing programs of States that choose to regulate personnel who perform radiologic procedures.

A. Licensure

1. Only eligible applicants who have passed the licensure examination shall be licensed as Radiographers, Nuclear Medicine Technologists, or Radiation Therapy Technologists.

2. Licenses shall be renewed at periodic intervals.

B. Eligibility

1. For regular eligibility to take the licensure examination, applicants shall have successfully completed an accredited program of formal education in radiography, nuclear medicine technology, or radiation therapy technology.

2. Special eligibility to take the licensure examination shall be provided for applicants whose training and/or experience are equal

to, or in excess of, those of a graduate of an accredited educational program.

C. Examination

A criterion-referenced examination in radiography, nuclear medicine technology, or radiation therapy technology shall be utilized to test the knowledge and competencies of applicants.

D. Continuing Competency

The licensed Radiographer, Nuclear Medicine Technologist, or Radiation Therapy Technologist shall maintain continuing competency in the area in which he/she is practicing.

E. Policies and Procedures

An organization that seeks to be recognized for the certifying of personnel shall adopt definite policies to ensure validity, objectivity, and fairness in the certifying process. The National Commission for Health Certifying Agencies (NCHCA) has published suitable criteria for a certifying organization to adopt with respect to policies for: (1) Determination of appropriate examination content (but not the actual content for any specific occupation); (2) construction of examinations; (3) administration of examinations; and (4) fulfilling responsibilities to applicants. An organization (whether an NCHCA member or not) that adopts these or equivalent criteria will meet all of the requirements of this section of these standards.

APPENDIX G TO PART 75—STANDARDS FOR LICENSING DENTAL HYGIENISTS AND DENTAL ASSISTANTS IN DENTAL RADIOGRAPHY

The following section describes basic elements to be incorporated in credentialing programs of States that choose to regulate personnel who perform radiologic procedures.

Currently, Dental Hygienists are credentialed through individual State licensure processes, all of which include assessment of competence in dental radiography. In all States, Dental Hygienists are required to be licensed prior to practicing. The existing State dental hygiene licensure processes meet the intent and purpose of the Consumer-Patient Radiation Health and Safety Act of 1981 and the standards for licensing Dental Hygienists in dental radiography set forth below.

A. Licensure/Permit

1. To those who have passed a licensure or designated dental radiography examination, a license or permit shall be issued by the State entity responsible for credentialing dental personnel.

2. Licenses or permits shall be renewed at periodic intervals.

B. Eligibility

1. An individual shall provide proof of graduating student status or graduation from an accredited or approved dental hygiene or dental assisting education program.

2. For dental assistants, special eligibility to take the examination shall be provided to applicants with appropriate combinations of training and/or experience.

C. Examination

A criterion-referenced examination in dental radiography shall be utilized to test the knowledge and competencies of applicants.

D. Continuing Competency

The Dental Hygienist or Dental Assistant shall be required to maintain continuing competency in the area in which he/she is practicing.

E. Policies and Procedures

An organization that seeks to be recognized for the certifying of personnel shall adopt definite policies to ensure validity, objectivity, and fairness in the certifying process. The National Commission for Health Certifying Agencies (NCHCA) has published suitable criteria for a certifying organization to adopt with respect to policies for: (1) Determination of appropriate examination content (but not the actual content for any specific occupation); (2) construction of examinations; (3) administration of examinations; and (4) fulfilling responsibilities to applicants. An organization (whether an NCHCA member or not) that adopts these or equivalent criteria will meet all of the requirements of this section of these standards.

SUBCHAPTER G—OCCUPATIONAL SAFETY AND HEALTH RESEARCH AND RELATED ACTIVITIES

PART 80—ADMINISTRATIVE FUNCTIONS, PRACTICES, AND PROCEDURES

Subparts A–C [Reserved]

Subpart D—Tuition Fees for Direct Training

Sec.
80.41 Applicability.
80.42 Definitions.
80.43 Tuition fees.
80.44 Schedule of fees.
80.45 Procedure for payment.
80.46 Refunds.

Subparts A–C [Reserved]

Subpart D—Tuition Fees for Direct Training

AUTHORITY: Sec. 501, 65 Stat. 290; 31 U.S.C. 483a.

SOURCE: 38 FR 16645, June 25, 1973, unless otherwise noted.

§ 80.41 Applicability.

The provisions of this subpart set forth the policies of the National Institute for Occupational Safety and Health with respect to its charging fees for direct training in occupational safety or health.

§ 80.42 Definitions.

Any term not defined herein shall have the same meaning as given it in the act. As used in this subpart:

(a) *Act* means the Occupational Safety and Health Act of 1970 (29 U.S.C. 651 *et seq.*).

(b) *Direct training* means all technical training courses conducted directly by NIOSH for personnel of State and local governmental agencies, other Federal agencies, private industries, universities, and other non-NIOSH agencies and organizations.

(c) *NIOSH* or *Institute* means the National Institute for Occupational Safety and Health.

(d) *Registration Office* means the Direct Training Registration Office, NIOSH, 1014 Broadway, Cincinnati, OH 45202.

§ 80.43 Tuition fees.

In accordance with the provisions of the subpart, the National Institute for Occupational Safety and Health will charge fees for all students attending NIOSH direct training courses which commence on or after July 1, 1973.

§ 80.44 Schedule of fees.

(a) Tuition fees will be computed on the basis of the cost to the Government for the Institute's participation in the course, as determined by the Director of the Institute.

(b) Total tuition charges for each course will be set forth in the course announcement.

§ 80.45 Procedure for payment.

(a) Applications for direct training courses shall be completed and submitted to the registration office in accordance with the instructions issued by that office.

(b) Federal agency personnel shall, upon notification of their acceptance, submit a letter identifying the agency and office to be billed, the agency order number, and any code numbers or other information necessary for billing purposes.

(c) All other applicants shall, upon notification of their acceptance by NIOSH, submit a check payable to the National Institute for Occupational Safety and Health in the amount indicated by the course announcement prior to the commencement of the training course.

§ 80.46 Refunds.

An applicant may withdraw his application and receive full reimbursement of the fee provided that written notification to the registration office is mailed no later than 10 days before the commencement of the course for which registration has been submitted.

PART 84—APPROVAL OF RESPIRATORY PROTECTIVE DEVICES

Subpart A—General Provisions

Sec.
84.1 Purpose.
84.2 Definitions.
84.3 Respirators for mine rescue or other emergency use in mines.

Subpart B—Application for Approval

84.10 Application procedures.
84.11 Contents of application.
84.12 Delivery of respirators and components by applicant; requirements.

Subpart C—Fees

84.20 Examination, inspection, and testing of complete respirator assemblies; fees.
84.21 Examination, inspection, and testing of respirator components or subassemblies; fees.
84.22 Unlisted fees; additional fees; payment by applicant prior to approval.

Subpart D—Approval and Disapproval

84.30 Certificates of approval; scope of approval.
84.31 Certificates of approval; contents.
84.32 Notice of disapproval.
84.33 Approval labels and markings; approval of contents; use.
84.34 Revocation of certificates of approval.
84.35 Changes or modifications of approved respirators; issuance of modification of certificate of approval.
84.36 Delivery of changed or modified approved respirator.

Subpart E—Quality Control

84.40 Quality control plans; filing requirements.
84.41 Quality control plans; contents.
84.42 Proposed quality control plans; approval by the Institute.
84.43 Quality control records; review by the Institute; revocation of approval.

Subpart F—Classification of Approved Respirators; Scope of Approval; Atmospheric Hazards; Service Time

84.50 Types of respirators to be approved; scope of approval.
84.51 Entry and escape, or escape only; classification.
84.52 Respiratory hazards; classification.
84.53 Service time; classification.

Subpart G—General Construction and Performance Requirements

84.60 Construction and performance requirements; general.
84.61 General construction requirements.
84.62 Component parts; minimum requirements.
84.63 Test requirements; general.
84.64 Pretesting by applicant; approval of test methods.
84.65 Conduct of examinations, inspections, and tests by the Institute; assistance by applicant; observers; recorded data; public demonstrations.
84.66 Withdrawal of applications; refund of fees.

Subpart H—Self-Contained Breathing Apparatus

84.70 Self-contained breathing apparatus; description.
84.71 Self-contained breathing apparatus; required components.
84.72 Breathing tubes; minimum requirements.
84.73 Harnesses; installation and construction; minimum requirements.
84.74 Apparatus containers; minimum requirements.
84.75 Half-mask facepieces, full facepieces, mouthpieces; fit; minimum requirements.
84.76 Facepieces; eyepieces; minimum requirements.
84.77 Inhalation and exhalation valves; minimum requirements.
84.78 Head harnesses; minimum requirements.
84.79 Breathing gas; minimum requirements.
84.80 Interchangeability of oxygen and air prohibited.
84.81 Compressed breathing gas and liquefied breathing gas containers; minimum requirements.
84.82 Gas pressure gages; minimum requirements.
84.83 Timers; elapsed time indicators; remaining service life indicators; minimum requirements.
84.84 Hand-operated valves; minimum requirements.
84.85 Breathing bags; minimum requirements.
84.86 Component parts exposed to oxygen pressures; minimum requirements.
84.87 Compressed gas filters; minimum requirements.
84.88 Breathing bag test.
84.89 Weight requirement.
84.90 Breathing resistance test; inhalation.
84.91 Breathing resistance test; exhalation.
84.92 Exhalation valve leakage test.
84.93 Gas flow test; open-circuit apparatus.

84.94 Gas flow test; closed-circuit apparatus.
84.95 Service-time test; open-circuit apparatus.
84.96 Service-time test; closed-circuit apparatus.
84.97 Test for carbon dioxide in inspired gas; open- and closed-circuit apparatus; maximum allowable limits.
84.98 Tests during low temperature operation.
84.99 Man tests; testing conditions; general requirements.
84.100 Man tests 1, 2, 3, and 4; requirements.
84.101 Man test 5; requirements.
84.102 Man test 6; requirements.
84.103 Man tests; performance requirements.
84.104 Gas tightness test; minimum requirements.

TABLES TO SUBPART H OF PART 84

Subpart I—Gas Masks

84.110 Gas masks; description.
84.111 Gas masks; required components.
84.112 Canisters and cartridges in parallel; resistance requirements.
84.113 Canisters and cartridges; color and markings; requirements.
84.114 Filters used with canisters and cartridges; location; replacement.
84.115 Breathing tubes; minimum requirements.
84.116 Harnesses; installation and construction; minimum requirements.
84.117 Gas mask containers; minimum requirements.
84.118 Half-mask facepieces, full facepieces, and mouthpieces; fit; minimum requirements.
84.119 Facepieces; eyepieces; minimum requirements.
84.120 Inhalation and exhalation valves; minimum requirements.
84.121 Head harnesses; minimum requirements.
84.122 Breathing resistance test; minimum requirements.
84.123 Exhalation valve leakage test.
84.124 Facepiece tests; minimum requirements.
84.125 Particulate tests; canisters containing particulate filters; minimum requirements.
84.126 Canister bench tests; minimum requirements.

TABLES TO SUBPART I OF PART 84

Subpart J—Supplied-Air Respirators

84.130 Supplied-air respirators; description.
84.131 Supplied-air respirators; required components.
84.132 Breathing tubes; minimum requirements.
84.133 Harnesses; installation and construction; minimum requirements.
84.134 Respirator containers; minimum requirements.
84.135 Half-mask facepieces, full facepieces, hoods, and helmets; fit; minimum requirements.
84.136 Facepieces, hoods, and helmets; eyepieces; minimum requirements.
84.137 Inhalation and exhalation valves; check valves; minimum requirements.
84.138 Head harnesses; minimum requirements.
84.139 Head and neck protection; supplied-air respirators; minimum requirements.
84.140 Air velocity and noise levels; hoods and helmets; minimum requirements.
84.141 Breathing gas; minimum requirements.
84.142 Air supply source; hand-operated or motor driven air blowers; Type A supplied-air respirators; minimum requirements.
84.143 Terminal fittings or chambers; Type B supplied-air respirators; minimum requirements.
84.144 Hand-operated blower test; minimum requirements.
84.145 Motor-operated blower test; minimum requirements.
84.146 Method of measuring the power and torque required to operate blowers.
84.147 Type B supplied-air respirator; minimum requirements.
84.148 Type C supplied-air respirator, continuous-flow class; minimum requirements.
84.149 Type C supplied-air respirator, demand and pressure demand class; minimum requirements.
84.150 Air-supply line tests; minimum requirements.
84.151 Harness test; minimum requirements.
84.152 Breathing tube test; minimum requirements.
84.153 Airflow resistance test, Type A and Type AE supplied-air respirators; minimum requirements.
84.154 Airflow resistance test; Type B and Type BE supplied-air respirators; minimum requirements.
84.155 Airflow resistance test; Type C supplied-air respirator, continuous flow class and Type CE supplied-air respirator; minimum requirements.
84.156 Airflow resistance test; Type C supplied-air respirator, demand class; minimum requirements.
84.157 Airflow resistance test; Type C supplied-air respirator, pressure-demand class; minimum requirements.
84.158 Exhalation valve leakage test.
84.159 Man tests for gases and vapors; supplied-air respirators; general performance requirements.

84.160 Man tests for gases and vapors; Type A and Type AE respirators; test requirements.
84.161 Man tests for gases and vapors; Type B and Type BE respirators; test requirements.
84.162 Man test for gases and vapors; Type C respirators, continuous-flow class and Type CE supplied-air respirators; test requirements.
84.163 Man test for gases and vapors; Type C supplied-air respirators, demand and pressure-demand classes; test requirements.

TABLES TO SUBPART J OF PART 84

Subpart K—Non-Powered Air-Purifying Particulate Respirators

84.170 Non-powered air-purifying particulate respirators; description.
84.171 Non-powered air-purifying particulate respirators; required components.
84.172 Breathing tubes; minimum requirements.
84.173 Harnesses; installation and construction; minimum requirements.
84.174 Respirator containers; minimum requirements.
84.175 Half-mask facepieces, full facepieces, hoods, helmets, and mouthpieces; fit; minimum requirements.
84.176 Facepieces, hoods, and helmets; eyepieces; minimum requirements.
84.177 Inhalation and exhalation valves; minimum requirements.
84.178 Head harnesses; minimum requirements.
84.179 Non-powered air-purifying particulate respirators; filter identification.
84.180 Airflow resistance tests.
84.181 Non-powered air-purifying particulate filter efficiency level determination.
84.182 Exhalation valve leakage test; minimum requirements.

Subpart L—Chemical Cartridge Respirators

84.190 Chemical cartridge respirators: description.
84.191 Chemical cartridge respirators; required components.
84.192 Cartridges in parallel; resistance requirements.
84.193 Cartridges; color and markings; requirements.
84.194 Filters used with chemical cartridges; location; replacement.
84.195 Breathing tubes; minimum requirements.
84.196 Harnesses; installation and construction; minimum requirements.
84.197 Respirator containers; minimum requirements.
84.198 Half-mask facepieces, full facepieces, mouthpieces, hoods, and helmets; fit; minimum requirements.
84.199 Facepieces, hoods, and helmets; eyepieces; minimum requirements.
84.200 Inhalation and exhalation valves; minimum requirements.
84.201 Head harnesses; minimum requirements.
84.202 Air velocity and noise levels; hoods and helmets; minimum requirements.
84.203 Breathing resistance test; minimum requirements.
84.204 Exhalation valve leakage test; minimum requirements.
84.205 Facepiece test; minimum requirements.
84.206 Particulate tests; respirators with filters; minimum requirements; general.
84.207 Bench tests; gas and vapor tests; minimum requirements; general.

TABLES TO SUBPART L OF PART 84

Subpart M [Reserved]

Subpart N—Special Use Respirators

84.250 Vinyl chloride respirators; description.
84.251 Required components.
84.252 Gas masks; requirements and tests.
84.253 Chemical-cartridge respirators; requirements and tests.
84.254 Powered air-purifying respirators; requirements and tests.
84.255 Requirements for end-of-service-life indicator.
84.256 Quality control requirements.
84.257 Labeling requirements.
84.258 Fees.

Subparts O–JJ [Reserved]

Subpart KK—Dust, Fume, and Mist; Pesticide; Paint Spray; Powered Air-Purifying High Efficiency Respirators and Combination Gas Masks

84.1100 Scope and effective dates.
84.1101 Definitions.
84.1102 Examination, inspection and testing of complete respirator assemblies; fees.
84.1103 Approval labels and markings; approval of contents; use.
84.1130 Respirators; description.
84.1131 Respirators; required components.
84.1132 Breathing tubes; minimum requirements.
84.1133 Harnesses; installation and construction; minimum requirements.
84.1134 Respirator containers; minimum requirements.
84.1135 Half-mask facepieces, full facepieces, hoods, helmets, and mouthpieces; fit; minimum requirements.
84.1136 Facepieces, hoods, and helmets; eyepieces; minimum requirements.
84.1137 Inhalation and exhalation valves; minimum requirements.

84.1138 Head harnesses; minimum requirements.
84.1139 Air velocity and noise levels; hoods and helmets; minimum requirements.
84.1140 Dust, fume, and mist respirators; performance requirements; general.
84.1141 Isoamyl acetate tightness test; dust, fume, and mist respirators designed for respiratory protection against fumes of various metals having an air contamination level not less than 0.05 milligram per cubic meter; minimum requirements.
84.1142 Isoamyl acetate tightness test; respirators designed for respiratory protection against dusts, fumes, and mists having an air contamination level less than 0.05 milligram per cubic meter, or against radionuclides; minimum requirements.
84.1143 Dust, fume, and mist air-purifying filter tests; performance requirements; general.
84.1144 Silica dust test for dust, fume, and mist respirators; single-use or reusable filters; minimum requirements.
84.1145 Silica dust test; non-powered single-use dust respirators; minimum requirements.
84.1146 Lead fume test for dust, fume, and mist respirators; minimum requirements.
84.1147 Silica mist test for dust, fume, and mist respirators; minimum requirements.
84.1148 Tests for respirators designed for respiratory protection against more than one type of dispersoid; minimum requirements.
84.1149 Airflow resistance tests; all dust, fume, and mist respirators; minimum requirements.
84.1150 Exhalation valve leakage test; minimum requirements.
84.1151 DOP filter test; respirators designed as respiratory protection against dusts, fumes, and mists having an air contamination level less than 0.05 milligram per cubic meter and against radionuclides; minimum requirements.
84.1152 Silica dust loading test; respirators designed as protection against dusts, fumes, and mists having an air contamination level less than 0.05 milligram per cubic meter and against radionuclides; minimum requirements.
84.1153 Dust, fume, mist, and smoke tests; canister bench tests; gas mask canisters containing filters; minimum requirements.
84.1154 Canister and cartridge requirements.
84.1155 Filters used with canisters and cartridges; location; replacement.
84.1156 Pesticide respirators; performance requirements; general.
84.1157 Chemical cartridge respirators with particulate filters; performance requirements; general.
84.1158 Dust, fume, and mist tests; respirators with filters; minimum requirements; general.

TABLES TO SUBPART KK OF PART 84

AUTHORITY: 29 U.S.C. 577a, 651 et seq., and 657(g); 30 U.S.C. 3, 5, 7, 811, 842(h), 844.

SOURCE: 60 FR 30355, June 8, 1995, unless otherwise noted.

Subpart A—General Provisions

§ 84.1 Purpose.

The purpose of the regulations contained in this part 84 is:

(a) To establish procedures and prescribe requirements which must be met in filing applications for approval by the National Institute for Occupational Safety and Health of respirators or changes or modifications of approved respirators;

(b) To establish a schedule of fees to be charged each applicant for the inspections, examinations, and testing conducted by the Institute under the provisions of this part;

(c) To provide for the issuance of certificates of approval or modifications of certificates of approval for respirators which have met the applicable construction, performance, and respiratory protection requirements set forth in this part; and

(d) To specify minimum requirements and to prescribe methods to be employed by the Institute and by the applicant in conducting inspections, examinations, and tests to determine the effectiveness of respirators used during entry into or escape from hazardous atmospheres.

§ 84.2 Definitions.

As used in this part—

(a) *Applicant* means an individual, partnership, company, corporation, association, or other organization that designs, manufactures, assembles, or controls the assembly of a respirator and who seeks to obtain a certificate of approval for such respirator.

(b) *Approval* means a certificate or formal document issued by the Institute stating that an individual respirator or combination of respirators has met the minimum requirements of this part, and that the applicant is authorized to use and attach an approval

label to any respirator, respirator container, or instruction card for any respirator manufactured or assembled in conformance with the plans and specifications upon which the approval was based, as evidence of such approval.

(c) *Approved* means conforming to the minimum requirements of this part.

(d) *Auxiliary equipment* means a self-contained breathing apparatus, the use of which is limited in underground mine rescue and recovery operations to situations where the wearer has ready access to fresh air and at least one crew equipped with approved self-contained breathing apparatus of 2 hours or longer rating, is in reserve at a fresh-air base.

(e) *Certification and Quality Assurance Branch* means the Certification and Quality Assurance Branch, Division of Safety Research, Appalachian Laboratory for Occupational Safety and Health, National Institute for Occupational Safety and Health, 1095 Willowdale Road, Morgantown, West Virginia 26505–2888.

(f) *Compressed-breathing gas* means oxygen or air stored in a compressed state and supplied to the wearer in gaseous form.

(g) *dBA* means sound pressure levels in decibels, as measured with the A-weighted network of a standard sound level meter using slow response.

(h) *Dust* means a solid mechanically produced particle with a size ranging from submicroscopic to macroscopic.

(i) *Respirators for entry into and escape from* means respiratory devices providing protection during entry into and escape from hazardous atmospheres.

(j) *Respirators for escape only* means respiratory devices providing protection only during escape from hazardous atmospheres.

(k) A *facepiece* or *mouthpiece* is a respirator component designed to provide a gas-tight or dust-tight fit with the face and may include headbands, valves, and connections for canisters, cartridges, filters, or respirable gas source.

(l) *Final inspection* means that activity carried out on a product after all manufacturing and assembly operations are completed to insure completeness and adherence to performance or other specifications, including satisfactory appearance.

(m) *Fume* means a solid condensation particle, generally less than 1 micrometer in diameter.

(n) *Gas* means an aeriform fluid which is in a gaseous state at ordinary temperature and pressure.

(o) *Hazardous atmosphere* means:

(1) Any atmosphere containing a toxic or disease producing gas, vapor, dust, fume, mist, or pesticide, either immediately or not immediately dangerous to life or health; or

(2) Any oxygen-deficient atmosphere.

(p) A *hood* or *helmet* is a respirator component which covers the wearer's head and neck, or head, neck, and shoulders, and is supplied with incoming respirable air for the wearer to breathe. It may include a headharness and connection for a breathing tube.

(q) *Immediately dangerous to life or health* means conditions that pose an immediate threat to life or health or conditions that pose an immediate threat of severe exposure to contaminants, such as radioactive materials, which are likely to have adverse cumulative or delayed effects on health.

(r) *Incoming inspection* means the activity of receiving, examining, and accepting only those materials and parts whose quality conforms to specification requirements.

(s) *In-process inspection* means the control of products at the source of production and at each step of the manufacturing process, so that departures from specifications can be corrected before defective components or materials are assembled into the finished product.

(t) *Institute* means the National Institute for Occupational Safety and Health, Department of Health and Human Services.

(u) *Liquefied-breathing gas* means oxygen or air stored in liquid form and supplied to the wearer in a gaseous form.

(v) *Mist* means a liquid condensation particle with a size ranging from submicroscopic to macroscopic.

(w) *MSHA* means the Mine Safety and Health Administration, U.S. Department of Labor.

(x) *Not immediately dangerous to life or health* means any hazardous atmosphere which may produce physical discomfort immediately, chronic poisoning after repeated exposure, or acute adverse physiological symptoms after prolonged exposure.

(y) *Oxygen-deficient atmosphere* means an atmosphere which contains an oxygen partial pressure of less than 148 millimeters of mercury (19.5 percent by volume at sea level).

(z) *Powered air-purifying respirator* means a device equipped with a facepiece, hood, or helmet, breathing tube, canister, cartridge, filter, canister with filter, or cartridge with filter, and a blower.

(aa) *Respirator* means any device designed to provide the wearer with respiratory protection against inhalation of a hazardous atmosphere.

(bb) *Single-use respirator* means a respirator that is entirely discarded after excessive resistance, sorbent exhaustion, or physical damage renders it unsuitable for further use.

(cc) *Vapor* means the gaseous state of a substance that is solid or liquid at ordinary temperature and pressure.

§ 84.3 Respirators for mine rescue or other emergency use in mines.

(a)(1) NIOSH and the Mine Safety and Health Administration (MSHA), U.S. Department of Labor, shall jointly review and issue certifications for respirators used for mine emergencies and mine rescue, including any associated service-life plans, users' manuals and other supporting documentation.

(2) Each certification for a respirator designed for mine rescue or other emergency use in mines shall include, as a condition of approval, any use limitations related to mine safety and health.

(b) NIOSH and MSHA shall jointly determine appropriate recall and retrofit remedies for field complaints or identified deficiencies involving any respirators used in the mining environment.

Subpart B—Application for Approval

§ 84.10 Application procedures.

(a) Inspection, examination, and testing leading to the approval of the types of respirators classified in subpart F of this part shall be undertaken by the Institute only pursuant to written applications which meet the minimum requirements set forth in this subpart B.

(b) Applications shall be submitted to the Certification and Quality Assurance Branch, and shall be accompanied by a check, bank draft, or money order in the amount specified in subpart C of this part, payable to the order of the National Institute for Occupational Safety and Health.

(c) Except as provided in § 84.64, the examination, inspection, and testing of all respirators shall be conducted by the Certification and Quality Assurance Branch.

(d) Applicants, manufacturers, or their representatives may visit or communicate with the Certification and Quality Assurance Branch in order to discuss the requirements for approval of any respirator or the proposed designs thereof. No charge shall be made for such consultation and no written report shall be issued to applicants, manufacturers, or their representatives by the Institute as a result of such consultation.

(e) Respirators having electrical or electronic components that are required to be permissible under chapter I of title 30 shall be tested in accordance with 30 CFR part 18. Applications for approval of such respirators by MSHA shall be submitted in writing to: MSHA, Approval and Certification Center, Box 251, Industrial Park Road, Triadelphia, West Virginia 26059.

§ 84.11 Contents of application.

(a) Each application for approval shall contain a complete written description of the respirator for which approval is requested together with drawings and specifications (and lists

thereof) showing full details of construction of the respirator and of the materials used.

(b) Drawings shall be titled, numbered, and dated; any revision dates shall be shown on the drawings, and the purpose of each revision being sought shall be shown on the drawing or described on an attachment to the drawing to which it applies.

(c) Each application for approval shall contain a proposed plan for quality control which meets the minimum requirements set forth in subpart E of this part.

(d) Each application shall contain a statement that the respirator has been pretested by the applicant as prescribed in §84.64, and shall include the results of such tests.

(e) Each application for approval shall contain a statement that the respirator and component parts submitted for approval are either prototypes, or made on regular production tooling, with no operation included which will not be incorporated in regular production processing.

(The information collections contained in this section are approved under OMB control number 0920–0109)

§84.12 Delivery of respirators and components by applicant; requirements.

(a) Each applicant shall, when an application is filed pursuant to §84.10, be advised by the Institute of the total number of respirators and component parts required for testing.

(b) The applicant shall deliver, at his own expense, the number of completely assembled respirators and component parts required for testing, to the Certification and Quality Assurance Branch.

(c) Respirators and component parts submitted for approval must be made from materials specified in the application.

(d) One completely assembled respirator approved under the provisions of this part may be retained by the Institute as a laboratory exhibit, the remaining respirators may be returned to the applicant at his own expense, upon written request within 30 days after notice of approval. If no such request is made, the respirators will be disposed of by the Institute in such manner as it deems appropriate.

(e) Where a respirator fails to meet the requirements for approval set forth in this part, all respirators and components delivered in accordance with this section may be returned to the applicant at his own expense, upon written request within 30 days after notice of disapproval. If no such request is made, the respirators will be disposed of by the Institute in such manner as it deems appropriate.

Subpart C—Fees

§84.20 Examination, inspection, and testing of complete respirator assemblies; fees.

Except as provided in §84.22, the following fees shall be charged by the Institute for the examination, inspection and testing of complete respirator assemblies:

Self-contained breathing apparatus:	
Entry and escape, 1 hour or more	$3,500
Entry and escape, less than 1 hour	2,750
Escape only	2,000
Gas masks:	
Single hazard	1,100
Type N	4,100
Supplied-air respirators	750
Particulate respirators	1,250
Chemical cartridge respirators	1,150

§84.21 Examination, inspection, and testing of respirator components or subassemblies; fees.

Except as provided in §84.22, the following fees shall be charged by the Institute for the examination, inspection and testing of the individual respirator components or subassemblies:

Facepieces	$450
Canisters	900
Cartridges	600
Filters	650
Hoses	250
Blowers	250
Harnesses	100

§84.22 Unlisted fees; additional fees; payment by applicant prior to approval.

(a) Applications for the examination, inspection and testing of complete respirator assemblies which are not listed in §84.20, or for the examination, inspection, and testing of respirator components or subassemblies which are not

listed in § 84.21, shall be accompanied by the following deposits:

Complete respirator assembly	$1,500
Each individual component or subassembly	500

(b) The Institute reserves the right to conduct any examination, inspection, or test it deems necessary to determine the quality and effectiveness of any listed or unlisted respirator assembly or respirator component or subassembly, and to assess the cost of such examinations, inspections, or tests against the applicant prior to the issuance of any approval for such assembly, component, or subassembly.

(c) The fees charged for the examination, inspection, and testing of unlisted respirator assemblies, unlisted individual respirator components or subassemblies, and for the additional examination, inspection, and testing of listed respirator assemblies and components or subassemblies shall be at the rate of $100 per day for each man-day required to be expended by the Institute.

(d) Upon completion of all examinations, inspections, and tests of unlisted respirator assemblies or components, or following the completion of any additional examination, inspections, or tests of listed assemblies, or components or subassemblies, including retesting subsequent to disapproval, the Institute shall advise the applicant in writing of the total cost assessed and the additional amount, if any, which must be paid to the Institute as a condition of approval.

(e) In the event the amount assessed by the Institute for unlisted assemblies, or components or subassemblies is less than the amount of the deposit submitted in accordance with paragraph (a) of this section, the Institute shall refund the overpayment upon the issuance of any approval or notice of disapproval.

Subpart D—Approval and Disapproval

§ 84.30 Certificates of approval; scope of approval.

(a) The Institute shall issue certificates of approval pursuant to the provisions of this subpart only for individual, completely assembled respirators which have been examined, inspected, and tested, and which meet the minimum requirements set forth in subparts H through L of this part, as applicable.

(b) The Institute will not issue certificates of approval for any respirator component or for any respirator subassembly.

(c) The Institute shall not issue an informal notification of approval. However, if the application for approval, submitted in accordance with § 84.11, states that the submitted respirator and component parts are only prototypes, the Institute will examine, inspect, and test such respirator and component parts in accordance with the provisions of this part. If, upon completion of such examinations, inspections and tests, it is found that the prototype meets the minimum requirements set forth in this part, the Institute may inform the applicant, in writing, of the results of the examinations, inspections, and tests, and may require him to resubmit respirators and component parts made on regular production tooling, with no operations included which will not be incorporated in regular production processing, for further examination, inspection, and testing, prior to issuance of the certificate of approval.

(d) Applicants required to resubmit respirators and component parts made on regular production tooling, with no operation included which will not be incorporated in regular production processing, shall be charged fees in accordance with subpart C of this part.

§ 84.31 Certificates of approval; contents.

(a) The certificate of approval shall contain a classification and a description of the respirator or combination of respirators for which it is issued, as provided in this part.

(b) The certificate of approval shall specifically set forth any restrictions or limitations on the respirator's use in hazardous atmospheres.

(c) Each certificate of approval shall be accompanied by the drawings and specifications (and lists thereof) submitted by the applicant in accordance

with § 84.11. These drawings and specifications shall be referenced in the certificate of approval, and shall be maintained by the applicant. The drawings and specifications listed in each certificate of approval shall set forth in detail the design and construction requirements which shall be met by the applicant during commercial production of the respirator.

(d) Each certificate of approval shall be accompanied by a reproduction of the approval label design to be employed by the applicant with each approved respirator, as provided in § 84.33.

(e) No test data or specific laboratory findings will accompany any certificate of approval, however, the Institute will release pertinent test data and specific findings upon written request by the applicant, or as required by statute or regulation.

(f) Each certificate of approval shall also contain the approved quality control plan as specified in § 84.42.

§ 84.32 Notice of disapproval.

(a) If, upon the completion of the examinations, inspections, and tests required to be conducted in accordance with the provisions of this part, it is found that the respirator does not meet the minimum requirements set forth in this part, the Institute shall issue a written notice of disapproval to the applicant.

(b) Each notice of disapproval shall be accompanied by all pertinent data or findings with respect to the defects of the respirator for which approval was sought with a view to the possible correction of any such defects.

(c) The Institute shall not disclose, except to the applicant or as required by statute or regulation, any data, findings, or other information with respect to any respirator for which a notice of disapproval is issued.

§ 84.33 Approval labels and markings; approval of contents; use.

(a) Full-scale reproductions of approval labels and markings, and a sketch or description of the method of application and position on the harness, container, canister, cartridge, filter, or other component, together with instructions for the use and maintenance of the respirator shall be submitted to the Institute for approval.

(b) Approval labels shall bear the emblem of the National Institute for Occupational Safety and Health and the seal of the Department of Health and Human Services, the applicant's name and address, an approval number assigned by the Institute and, where appropriate, restrictions or limitations placed upon the use of the respirator by the Institute. The approval number assigned by the Institute shall be designated by the prefix TC and a serial number.

(c) The Institute shall, where necessary, notify the applicant when additional labels, markings, or instructions will be required.

(d) Approval labels and markings shall only be used by the applicant to whom they were issued.

(e) Legible reproductions or abbreviated forms of the label approved by the Institute for use on each respirator shall be attached to or printed at the following locations:

Respirator type	Label type	Location
Self-contained breathing apparatus.	Entire	Harness assembly and canister (where applicable).
Gas mask	Entire	Mask container and canister.
Supplied air respirator	.....do	Respirator container or instruction card.
Particulate respirator	.....do	Respirator container and filter container.
	Abbreviated	Filters.
Chemical-cartridge respirator	Entire	Respirator container, cartridge container, and filter containers (where applicable).
	Abbreviated	Cartridges and filters and filter containers.

(f) The use of any Institute approval label obligates the applicant to whom it is issued to maintain or cause to be maintained the approved quality control sampling schedule and the acceptable quality level for each characteristic tested, and to assure that it

is manufactured according to the drawings and specifications upon which the certificate of approval is based.

(g) Each respirator, respirator component, and respirator container shall, as required by the Institute to assure quality control and proper use of the respirator, be labeled distinctly to show the name of the applicant, and the name and letters or numbers by which the respirator or respirator component is designated for trade purposes, and the lot number, serial number, or approximate date of manufacture.

§ 84.34 Revocation of certificates of approval.

The Institute reserves the right to revoke, for cause, any certificate of approval issued pursuant to the provisions of this part. Such causes include, but are not limited to, misuse of approval labels and markings, misleading advertising, and failure to maintain or cause to be maintained the quality control requirements of the certificate of approval.

§ 84.35 Changes or modifications of approved respirators; issuance of modification of certificate of approval.

(a) Each applicant may, if he desires to change any feature of an approved respirator, request a modification of the original certificate of approval issued by the Institute for such respirator by filing an application for such modification in accordance with the provisions of this section.

(b) Applications shall be submitted as for an original certificate of approval, with a request for a modification of the existing certificate to cover any proposed change.

(c) The application shall be accompanied by appropriate drawings and specifications, and by a proposed quality control plan which meets the requirements of subpart E of this part.

(d) The application for modification, together with the accompanying material, shall be examined by the Institute to determine whether testing will be required.

(e) The Institute shall inform the applicant of the fee required for any additional testing and the applicant will be charged for the actual cost of any examination, inspection, or test required, and such fees shall be submitted in accordance with the provisions of subpart C of this part.

(f) If the proposed change or modification meets the requirements of this part, a formal certificate of modification will be issued, accompanied, where necessary, by a list of new and revised drawings and specifications covering the change(s) and reproductions of revised approval labels.

(The information collections contained in this section are approved under OMB control number 0920–0109)

§ 84.36 Delivery of changed or modified approved respirator.

An approved respirator for which a formal certificate of modification has been issued shall be delivered, with proper markings and containers, by the applicant to the Certification and Quality Assurance Branch, as soon as it is commercially produced.

Subpart E—Quality Control

§ 84.40 Quality control plans; filing requirements.

As a part of each application for approval or modification of approval submitted pursuant to this part, each applicant shall file with the Institute a proposed quality control plan which shall be designed to assure the quality of respiratory protection provided by the respirator for which approval is sought.

§ 84.41 Quality control plans; contents.

(a) Each quality control plan shall contain provisions for the management of quality, including:

(1) Requirements for the production of quality data and the use of quality control records;

(2) Control of engineering drawings, documentations, and changes;

(3) Control and calibration of measuring and test equipment;

(4) Control of purchased material to include incoming inspection;

(5) Lot identification, control of processes, manufacturing, fabrication, and assembly work conducted in the applicant's plant;

(6) Audit of final inspection of the completed product; and

(7) The organizational structure necessary to carry out these provisions.

(b) Each provision for incoming and final inspection in the quality control plan shall include a procedure for the selection of a sample of respirators and the components thereof for testing, in accordance with procedures set forth in Military Standard MIL–STD–414, 11 June 1957, including Change Notice No. 1, ''Sampling Procedures and Tables for Inspection by Variables for Percent Defective,'' or an approved equivalent sampling procedure, or an approved combination of sampling procedures. The procedure of Military Standard MIL–STD–105D, 29 April 1963, ''Sampling Procedures and Tables for Inspection by Attributes,'' is an example of an equivalent sampling procedure. MIL–STD–414 is incorporated by reference and has been approved by the Director of the Federal Register in accordance with 5 U.S.C. 552(a) and 1 CFR part 51. Copies may be obtained from DODSSP, Standardization Document Order Desk, 700 Robbins Avenue, Bldg. 4D, Philadelphia, PA 19111–5094. Copies may be inspected at the NIOSH, Certification and Quality Assurance Branch, 1095 Willowdale Road, Morgantown, WV 26505–2888, or at the Office of the Federal Register, 800 North Capitol Street NW., suite 700, Washington, DC. Copies of MIL–STD–105D may be inspected or obtained from the NIOSH, Certification and Quality Assurance Branch, 1095 Willowdale Road, Morgantown, WV 26505–2888. Incoming bulk raw material inspection or verification of specification, and in-process inspection shall be sufficient to ensure control of product quality through the manufacturing cycle.

(c) The sampling procedure shall include a list of the characteristics to be tested by the applicant or his agent.

(d) The characteristics listed in accordance with paragraph (c) of this section shall be classified according to the potential effect of such defect and grouped into the following classes:

(1) *Critical.* A defect that judgment and experience indicate is likely to result in a condition immediately hazardous to life or health for individuals using or depending upon the respirator;

(2) *Major A.* A defect, other than critical, that is likely to result in failure to the degree that the respirator does not provide any respiratory protection, or a defect that reduces protection and is not detectable by the user;

(3) *Major B.* A defect, other than Major A or critical, that is likely to result in reduced respiratory protection, and is detectable by the user; and

(4) *Minor.* A defect that is not likely to materially reduce the usability of the respirator for its intended purpose, or a defect that is a departure from established standards and has little bearing on the effective use or operation of the respirator.

(e) The quality control inspection test method to be used by the applicant or his agent for each characteristic required to be tested shall be described in detail.

(f) Each item manufactured shall be 100 percent inspected for defects in all critical characteristics and all defective items shall be rejected.

(g) The Acceptable Quality Level (AQL) for each major or minor defect so classified by the applicant shall be:

(1) *Major A.* 1.0 percent;

(2) *Major B.* 2.5 percent; and

(3) *Minor.* 4.0 percent.

(h) Except as provided in paragraph (i) of this section, inspection level IV as described in MIL–STD–414, 11 June 1957, including Change Notice No.1, ''Sampling Procedures and Tables for Inspection by Variables for Percent Defective,'' or an equivalent procedure, shall be used for major and minor characteristics and 100 percent inspection for critical characteristics. Inspection level II as described in MIL–STD–105D, 29 April 1963, ''Sampling Procedures and Tables for Inspection by Attributes,'' is an example of an equivalent procedure.

(i) Subject to the approval of the Institute, where the quality control plan provisions for raw material, processes, manufacturing, and fabrication, inspections are adequate to ensure control of finished article quality, destructive testing of finished articles may be

conducted at a lower level of inspection than that specified in paragraph (h) of this section.

(The information collections contained in this section are approved under OMB control number 0920–0109)

§ 84.42 Proposed quality control plans; approval by the Institute.

(a) Each proposed quality control plan submitted in accordance with this subpart shall be reviewed by the Institute to determine its effectiveness in ensuring the quality of respiratory protection provided by the respirator for which an approval is sought.

(b) If the Institute determines that the proposed quality control plan submitted by the applicant will not ensure adequate quality control, the Institute shall require the applicant to modify the procedures and testing requirements of the plan prior to approval of the plan and issuance of any certificate of approval.

(c) Approved quality control plans shall constitute a part of and be incorporated into any certificate of approval issued by the Institute, and compliance with such plans by the applicant shall be a condition of approval.

§ 84.43 Quality control records; review by the Institute; revocation of approval.

(a) The applicant shall keep quality control inspection records sufficient to carry out the procedures required in MIL–STD–414, 11 June 1957, including Change Notice No. 1, ''Sampling Procedures and Tables for Inspection by Variables for Percent Defective,'' or an approved equivalent sampling procedure. MIL–STD–105D, 29 April 1963, ''Sampling Procedures and Tables for Inspection by Attributes,'' is an example of an approved equivalent sampling procedure. MIL–STD–414 is incorporated by reference and has been approved by the Director of the Federal Register in accordance with 5 U.S.C. 552(a) and 1 CFR part 51. Copies may be obtained from DODSSP, Standardization Document Order Desk, 700 Robbins Avenue, Bldg. 4D, Philadelphia, Pa. 19111–5094. Copies may be inspected at the NIOSH, Certification and Quality Assurance Branch, 1095 Willowdale Road, Morgantown, WV 26505–2888, or at the Office of the Federal Register, 800 North Capitol Street, NW., suite 700, Washington, DC. Copies of MIL–STD–105D may be inspected or obtained from the NIOSH, Certification and Quality Assurance Branch, 1095 Willowdale Road, Morgantown, WV 26505–2888.

(b) The Institute reserves the right to have its representatives inspect the applicant's quality control test methods, equipment, and records, and to interview any employee or agent of the applicant in regard to quality control test methods, equipment, and records.

(c) The Institute reserves the right to revoke, for cause, any certificate of approval where it is found that the applicant's quality control test methods, equipment, or records do not ensure effective quality control over the respirator for which the approval was issued.

(The information collections contained in this section are approved under OMB control number 0920–0109)

Subpart F—Classification of Approved Respirators; Scope of Approval; Atmospheric Hazards; Service Time

§ 84.50 Types of respirators to be approved; scope of approval.

Approvals shall be issued for the types of respirators which have been classified pursuant to this subpart F, have been inspected, examined and tested by the Institute, in accordance with the provisions of subparts G through L of this part, and have been found to provide respiratory protection for fixed periods of time against the hazards specified in such approval.

§ 84.51 Entry and escape, or escape only; classification.

Respirators described in subparts H through L of this part shall be classified for use as follows:

(a) *Entry and escape.* Respirators designed and approved for use during entry into a hazardous atmosphere, and for escape from a hazardous atmosphere; or

(b) *Escape only.* Respirators designed and approved for use only during escape from a hazardous atmosphere.

§ 84.52 Respiratory hazards; classification.

Respirators described in subparts H through L of this part shall be classified as approved for use against any or all of the following respiratory hazards:

(a) Oxygen deficiency;

(b) Gases and vapors; and

(c) Particles, including dusts, fumes and mists.

§ 84.53 Service time; classification.

(a) Respirators described in subparts H through L of this part shall be classified, where applicable, as approved for use during the following prescribed service times:

(1) Four hours;

(2) Three hours;

(3) Two hours;

(4) One hour;

(5) Forty-five minutes;

(6) Thirty minutes;

(7) Fifteen minutes;

(8) Ten minutes;

(9) Five minutes; or

(10) Three minutes.

(b) Other service times may be prescribed by the Institute.

Subpart G—General Construction and Performance Requirements

§ 84.60 Construction and performance requirements; general.

(a) The Institute shall issue approvals for the types of respirators described in subparts H through L of this part which have met the minimum requirements set forth for such respirators in this part.

(b) In addition to the types of respirators specified in subparts H through L of this part, the Institute shall issue approvals for other respiratory protective devices not specifically described in this part subject to such additional requirements as may be imposed in accordance with § 84.63(c).

§ 84.61 General construction requirements.

(a) Respirators will not be accepted by the Institute for examination, inspection and testing unless they are designed on sound engineering and scientific principles, constructed of suitable materials and evidence good workmanship.

(b) Respirator components which come into contact with the wearer's skin shall be made of nonirritating materials.

(c) Components replaced during or after use shall be constructed of materials which will not be damaged by normal handling.

(d) Mouthpieces, hoods, helmets, and facepieces, except those employed in single-use respirators, shall be constructed of materials which will withstand repeated disinfection as recommended by the applicant in his instructions for use of the device.

§ 84.62 Component parts; minimum requirements.

(a) The component parts of each respirator shall be:

(1) Designed, constructed, and fitted to insure against creation of any hazard to the wearer;

(2) Assembled to permit easy access for inspection and repair of functional parts; and

(3) Assembled to permit easy access to parts which require periodic cleaning and disinfecting.

(b) Replacement parts shall be designed and constructed to permit easy installation and to maintain the effectiveness of the respirator.

§ 84.63 Test requirements; general.

(a) Each respirator and respirator component shall when tested by the applicant and by the Institute, and meet the applicable requirements set forth in subparts H through L of this part.

(b) Where a combination respirator is assembled from two or more types of respirators, as described in this part, each of the individual respirator types which have been combined shall, as applicable, meet the minimum requirements for such respirators set forth in subparts H through L of this part, and such combination respirators, except as specified in § 84.70(b)(2), will be classified by the type of respirator in the combination which provides the least protection to the user.

(c) In addition to the minimum requirements set forth in subparts H through L of this part, the Institute reserves the right to require, as a further

condition of approval, any additional requirements deemed necessary to establish the quality, effectiveness, and safety of any respirator used as protection against hazardous atmospheres.

(d) Where it is determined after receipt of an application that additional requirements will be required for approval, the Institute will notify the applicant in writing of these additional requirements, and necessary examinations, inspections, or tests, stating generally the reasons for such requirements, examinations, inspections, or tests.

§ 84.64 Pretesting by applicant; approval of test methods.

(a) Prior to making or filing any application for approval or modification of approval, the applicant shall conduct, or cause to be conducted, examinations, inspections, and tests of respirator performance which are equal to or exceed the severity of those prescribed in this part.

(b) With the application, the applicant shall provide a statement to the Institute showing the types and results of the examinations, inspections, and tests required under paragraph (a) of this section and state that the respirator meets the minimum requirements of subparts H through L of this part, as applicable. Complete examination, inspection, and test data shall be retained on file by the applicant and be submitted, upon request, to the Institute.

(c) The Institute may, upon written request by the applicant, provide drawings and descriptions of its test equipment and otherwise assist the applicant in establishing a test laboratory or securing the services of a testing agency.

(d) No approval will be issued until the Institute has validated the applicant's test results.

§ 84.65 Conduct of examinations, inspections, and tests by the Institute; assistance by applicant; observers; recorded data; public demonstrations.

(a) All examinations, inspections, and tests conducted pursuant to subparts H through L of this part will be under the sole direction and control of the Institute.

(b) The Institute may, as a condition of approval, require the assistance of the applicant or agents of the applicant during the assembly, disassembly, or preparation of any respirator or respirator component prior to testing or in the operation of such equipment during testing.

(c) Only Institute personnel, persons assisting the Institute pursuant to paragraph (b) of this section, and such other persons as are requested by the Institute or the applicant to be observers, shall be present during any examination, inspection, or test conducted prior to the issuance of an approval by the Institute for the equipment under consideration.

(d) The Institute shall hold as confidential any analyses, drawings, specifications, or materials submitted by the applicant and shall not disclose any principles or patentable features of such equipment, except as required by statute or regulation.

(e) As a condition of each approval issued for any respirator, the Institute reserves the right, following the issuance of such approval, to conduct such public tests and demonstrations of the approved respiratory equipment as is deemed appropriate.

§ 84.66 Withdrawal of applications; refund of fees.

(a) Any applicant may, upon a written request submitted to the Institute, withdraw any application for approval of any respirator.

(b) Upon receipt of a written request for the withdrawal of an application, the Institute shall determine the total man-days expended and the amount due for services already performed during the course of any examinations, inspections, or tests conducted pursuant to such application. The total amount due shall be determined in accordance with the provisions of § 84.22 and assessed against the fees submitted by the applicant. If the total amount assessed is less than the fees submitted, the Institute shall refund the balance together with a statement of the charges made for services rendered.

Subpart H—Self-Contained Breathing Apparatus

§ 84.70 Self-contained breathing apparatus; description.

(a) Self-contained breathing apparatus, including all completely assembled, portable, self-contained devices designed for use as respiratory protection during entry into and escape from or escape only from hazardous atmospheres, are described as follows:

(1) *Closed-circuit apparatus.* An apparatus of the type in which the exhalation is rebreathed by the wearer after the carbon dioxide has been effectively removed and a suitable oxygen concentration restored from sources composed of:

(i) Compressed oxygen; or

(ii) Chemical oxygen; or

(iii) Liquid-oxygen.

(2) Open-circuit apparatus. An apparatus of the following types from which exhalation is vented to the atmosphere and not rebreathed:

(i) *Demand-type apparatus.* An apparatus in which the pressure inside the facepiece in relation to the immediate environment is positive during exhalation and negative during inhalation; or

(ii) *Pressure-demand-type apparatus.* An apparatus in which the pressure inside the facepiece in relation to the immediate environment is positive during both inhalation and exhalation.

(b) The following respirators may be classified as designed and approved for use during emergency entry into a hazardous atmosphere:

(1) A combination respirator which includes a self-contained breathing apparatus; and

(2) A Type ''C'' or Type ''CE'' supplied air respirator, where—

(i) The self-contained breathing apparatus is classified for 3-, 5-, or 10-minute service time and the air line supply is used during entry; or

(ii) The self-contained breathing apparatus is classified for 15 minutes or longer service time and not more than 20 percent of the rated capacity of the air supply is used during entry.

(c) Self-contained breathing apparatus classified for less than 1 hour service time will not be approved for use during underground mine rescue and recovery operations except as auxiliary equipment.

(d) Self-contained breathing apparatus classified for less than 30 minutes' service time will not be approved for use as auxiliary equipment during underground mine rescue and recovery operations.

§ 84.71 Self-contained breathing apparatus; required components.

(a) Each self-contained breathing apparatus described in § 84.70 shall, where its design requires, contain the following component parts:

(1) Facepiece or mouthpiece, and noseclip;

(2) Respirable breathing gas container;

(3) Supply of respirable breathing gas;

(4) Gas pressure or liquid level gages;

(5) Timer;

(6) Remaining service life indicator or warning device;

(7) Hand-operated valves;

(8) Breathing bag;

(9) Safety relief valve or safety relief system; and

(10) Harness.

(b) The components of each self-contained breathing apparatus shall meet the minimum construction requirements set forth in subpart G of this part.

§ 84.72 Breathing tubes; minimum requirements.

Flexible breathing tubes used in conjunction with breathing apparatus shall be designed and constructed to prevent:

(a) Restriction of free head movement;

(b) Disturbance of the fit of facepieces and mouthpieces;

(c) Interference with the wearer's activities; and

(d) Shutoff of airflow due to kinking, or from chin or arm pressure.

§ 84.73 Harnesses; installation and construction; minimum requirements.

(a) Each apparatus shall, where necessary, be equipped with a suitable harness designed and constructed to hold the components of the apparatus in position against the wearer's body.

(b) Harnesses shall be designed and constructed to permit easy removal and replacement of apparatus parts and, where applicable, provide for holding a full facepiece in the ready position when not in use.

§ 84.74 Apparatus containers; minimum requirements.

(a) Apparatus may be equipped with a substantial, durable container bearing markings which show the applicant's name, the type and commercial designation of the respirator it contains, and all appropriate approval labels.

(b) Containers supplied by the applicant for carrying or storing self-contained breathing apparatus will be inspected, examined, and tested as components of the respirator for which approval is sought.

(c) Containers for self-contained breathing apparatus shall be designed and constructed to permit easy removal of the apparatus.

§ 84.75 Half-mask facepieces, full facepieces, mouthpieces; fit; minimum requirements.

(a) Half-mask facepieces and full facepieces shall be designed and constructed to fit persons with various facial shapes and sizes, either:

(1) By providing more than one facepiece size; or

(2) By providing one facepiece size which will fit varying facial shapes and sizes.

(b) Full facepieces shall provide for the optional use of corrective spectacles or lenses which shall not reduce the respiratory protective qualities of the apparatus.

(c) Apparatus with mouthpieces shall be equipped with noseclips which are securely attached to the mouthpiece or apparatus and provide an airtight seal.

(d) Facepieces shall be designed to prevent eyepiece, spectacle, and lens fogging.

§ 84.76 Facepieces; eyepieces; minimum requirements.

(a) Facepieces shall be designed and constructed to provide adequate vision which is not distorted by the eyepiece.

(b) All eyepieces shall be designed and constructed to be impact and penetration resistant. Federal Specification, Mask, Air Line: and Respirator, Air Filtering, Industrial, GGG–M–125d, October 11, 1965 with interim amendment-1, July 30, 1969, is an example of an appropriate standard for determining impact and penetration resistance. Copies of GGG–M–125d may be obtained from the NIOSH, Certification and Quality Assurance Branch, 1095 Willowdale Road, Morgantown, WV 26505–2888.

§ 84.77 Inhalation and exhalation valves; minimum requirements.

(a) Inhalation and exhalation valves shall be provided where necessary and protected against damage and distortion.

(b) Exhalation valves shall be—

(1) Protected against external influence; and

(2) Designed and constructed to prevent inward leakage of contaminated air.

§ 84.78 Head harnesses; minimum requirements.

(a) Facepieces shall be equipped with adjustable and replaceable head harnesses designed and constructed to provide adequate tension during suspension and an even distribution of pressure over the entire area in contact with the face.

(b) Mouthpieces shall be equipped, where applicable, with adjustable and replaceable harnesses designed and constructed to hold the mouthpiece in place.

§ 84.79 Breathing gas; minimum requirements.

(a) Breathing gas used to supply apparatus shall be respirable and contain no less than 19.5 (dry atmosphere) volume percent of oxygen.

(b) Oxygen, including liquid oxygen, shall contain not less than 99.0 percent, by volume, of pure O_2, not more than 0.03%, by volume, carbon dioxide, and not more than 0.001%, by volume, carbon monoxide. Methods for making these determinations can be found in the U.S. Pharmacopeia National Formulary. Containers used for oxygen must not be treated with any toxic, sleep-inducing, narcosis-producing, or respiratory tract irritating compounds.

(c) Compressed, gaseous breathing air shall meet the applicable minimum grade requirements for Type I gaseous air set forth in the Compressed Gas Association Commodity Specification for Air, G–7.1, 1966 (Grade D or higher quality). G–7.1 is incorporated by reference and has been approved by the Director of the Federal Register in accordance with 5 U.S.C. 552(a) and 1 CFR part 51. Copies may be obtained from American National Standards Institute, Inc., 1430 Broadway, New York, NY 10018. Copies may be inspected at the NIOSH, Certification and Quality Assurance Branch, 1095 Willowdale Road, Morgantown, WV 26505–2888, or at the Office of the Federal Register, 800 North Capitol Street, NW., suite 700, Washington, DC.

(d) Compressed, liquefied breathing air shall meet the applicable minimum grade requirements for Type II liquid air set forth in the Compressed Gas Association Commodity Specification for Air, G–7.1, 1966 (Grade B or higher quality). G–7.1 is incorporated by reference and has been approved by the Director of the Federal Register in accordance with 5 U.S.C. 552(a) and 1 CFR part 51. Copies may be obtained from American National Standards Institute, Inc., 1430 Broadway, New York, NY 10018. Copies may be inspected at the NIOSH, Certification and Quality Assurance Branch, 1095 Willowdale Road, Morgantown, WV 26505–2888, or at the Office of the Federal Register, 800 North Capitol Street, NW., suite 700, Washington, DC.

§ 84.80 Interchangeability of oxygen and air prohibited.

Approvals shall not be issued by the Institute for any apparatus, combination of respirator assemblies, or any apparatus or respirator component which is designed or constructed to permit the interchangeable use of oxygen and air.

§ 84.81 Compressed breathing gas and liquefied breathing gas containers; minimum requirements.

(a) Compressed breathing gas and liquefied breathing gas containers shall meet the minimum requirements of the Department of Transportation for interstate shipment of such containers when fully charged.

(b) Such containers shall be permanently and legibly marked to identify their contents, e.g., compressed breathing air, compressed breathing oxygen, liquefied breathing air, or liquefied breathing oxygen.

(c) Containers normally removed from apparatus for refilling shall be equipped with a dial indicating gage which shows the pressure in the container.

(d) Compressed breathing gas contained valves or a separate charging system or adapter provided with each apparatus shall be equipped with outlet threads specified for the service by the American Standards Association, Compressed Gas Cylinder Valve Outlet and Inlet Connections, B57.1–1965. B57.1–1965 is incorporated by reference and has been approved by the Director of the Federal Register in accordance with 5 U.S.C. 552(a) and 1 CFR part 51. Copies may be obtained from American National Standards Institute, Inc., 1430 Broadway, New York, NY Copies may be inspected at the NIOSH, Certification and Quality Assurance Branch, 1095 Willowdale Road, Morgantown, WV 26505–2888, or at the Office of the FEDERAL REGISTER, 800 North Capitol Street, NW., suite 700, Washington, DC.

§ 84.82 Gas pressure gages; minimum requirements.

(a) Gas pressure gages employed on compressed breathing gas containers shall be calibrated in pounds per square inch.

(b) Liquid-level gages shall be calibrated in fractions of total container capacity, or in units of liquid volume.

(c) Gas pressure gages other than those specified in paragraphs (a) and (b) of this section shall be calibrated in:

(1) Pounds per square inch; or

(2) In fractions of total container capacity; or

(3) Both in pounds per square inch and fractions of total container capacity.

(d)(1) Dial-indicating gages shall be reliable to within ±5 percent of full scale when tested both up and down the scale at each of 5 equal intervals.

(2) The full-scale graduation of dial-indicating gages shall not exceed 150 percent of the maximum rated cylinder

pressures specified for the container in applicable Department of Transportation specifications or permits.

(e)(1) Stem-type gages shall be readable by sight and by touch and shall have a stem travel distance of not less than one-fourth inch between each graduation.

(2) A minimum of five graduations shall be engraved on the stem of each gage and these graduations shall include readings for empty, one-quarter, one-half, three-quarters, and full.

(3) Stem gage readings shall not vary from true readings by more than one-sixteenth inch per inch of stem travel.

(f) The loss of gas through a broken gage or severed gage connection shall not exceed 70 liters per minute when the cylinder pressure is 6,900 kN/m.^{2} (1,000 pounds per square inch gage) or when the liquid level is at one-half.

(g) Where gages are connected to the apparatus through a gage line, the gage and line shall be capable of being isolated from the apparatus except where the failure of the gage or line would not impair the performance or service life of the apparatus.

(h) Oxygen pressure gages shall have the words ''Oxygen'' and ''Use No Oil'' marked prominently on the gage.

(i)(1) Apparatus using compressed breathing gas, except apparatus classified for escape only, shall be equipped with gages visible to the wearer which indicate the remaining gas content in the container.

(2) Apparatus using liquefied breathing gas, except apparatus classified for escape only, shall be equipped with gages visible to the wearer which indicate the remaining liquid content in the container; however, where the liquid content cannot be rapidly vented, and the service time of the device begins immediately after filling, a timer shall be provided in place of a visible gage.

§ 84.83 Timers; elapsed time indicators; remaining service life indicators; minimum requirements.

(a) Elapsed time indicators shall be provided for apparatus with a chemical oxygen source, except:

(1) Apparatus used for escape only; or

(2) Liquefied breathing gas apparatus equipped with gages visible to the wearer which indicate the remaining liquid content in the container.

(b) The timer or other indicator shall be accurately calibrated in minutes of remaining service life.

(c) Timers shall be readable by sight and by touch during use by the wearer.

(d) Timers shall be equipped with automatically preset alarms which will warn the wearer for a period of 7 seconds or more after the preset time has elapsed.

(e) Remaining service-life indicators or warning devices shall be provided in addition to a pressure gage on compressed gas self-contained breathing apparatus, except apparatus used for escape only, and shall operate automatically without preadjustment by the wearer.

(f) Each remaining service-life indicator or warning device shall give an alarm when the remaining service life of the apparatus is reduced within a range of 20 to 25 percent of its rated service time.

§ 84.84 Hand-operated valves; minimum requirements.

(a) Hand-operated valves shall be designed and constructed to prevent removal of the stem from the valve body during normal usage to insure against a sudden release of the full pressure of the container when the valve is opened.

(b) Valves shall be designed or positioned to prevent accidental opening and closing, and damage from external forces.

(c) Valves operated during use of the apparatus shall be installed in locations where they can be readily adjusted by the wearer.

(d) Main-line valves, designed and constructed to conserve gas in the event of a regulator or demand valve failure, shall be provided in addition to gas container valves, except when such failure will not affect performance.

(e) Hand-operated bypass systems designed and constructed to permit the wearer to breathe and to conserve his gas supply in the event of a regulator or demand valve failure, shall be provided where necessary.

(f) Valves installed on apparatus shall be clearly distinguishable from one another by sight and touch.

(g) The bypass system valve control shall be colored red.

(h) A main-line or bypass valve or system will not be required on apparatus for escape only.

(i) Safety relief valves or systems, designed and constructed to release excess pressure in the breathing circuit, shall be provided on closed-circuit apparatus, and shall meet the following requirements:

(1) The relief valve or system shall operate automatically when the pressure in the breathing circuit on the inhalation side of the breathing bag reaches 13 mm. (one-half inch) water-column height of pressure above the minimum pressure required to fill the breathing bag, within the breathing resistance requirements for the apparatus.

(2) The relief valve or system shall be designed to prevent external atmospheres from entering the breathing circuit.

(3) The relief valve or system shall be designed to permit manual overriding for test purposes and in the event of a failure in the valve or system.

§ 84.85 Breathing bags; minimum requirements.

(a) Breathing bags shall have sufficient volume to prevent gas waste during exhalation and to provide an adequate reserve for inhalation.

(b) Breathing bags shall be constructed of materials which are flexible and resistant to gasoline vapors.

(c) Breathing bags shall be installed in a location which will protect them from damage or collapse by external forces, except on apparatus classified for escape only.

§ 84.86 Component parts exposed to oxygen pressures; minimum requirements.

Each applicant shall certify that the materials employed in the construction of component parts exposed to oxygen pressures above atmospheric pressure are safe and compatible for their intended use.

§ 84.87 Compressed gas filters; minimum requirements.

All self-contained breathing apparatus using compressed gas shall have a filter downstream of the gas source to effectively remove particles from the gas stream.

§ 84.88 Breathing bag test.

(a) Breathing bags will be tested in an air atmosphere saturated with gasoline vapor at room temperature (24–30 °C./75–85 °F.) for a continuous period of twice the rated time of the apparatus (except for apparatus for escape only where the test period shall be the rated time of the apparatus).

(b) The bag will be operated during this test by a breathing machine with 24 respirations per minute and a minute-volume of 40 liters.

(c) A breathing machine cam with a work rate of 622 kp.-m./min. will be used. The dimensions of a suitable breathing machine cam are available from the Institute upon request.

(d) The air within the bag(s) shall not contain more than 100 parts per million of gasoline vapor at the end of the test.

§ 84.89 Weight requirement.

(a) The completely assembled and fully charged apparatus shall not weigh more than 16 kg. (35 pounds); however, where the weight decreases by more than 25 percent of its initial charge weight during its rated service life, the maximum allowable weight of a completely assembled and fully charged apparatus shall be 18 kg. (40 pounds).

(b) Where an apparatus employs equipment which contributes materially to the wearer's comfort, e.g., a cooling system, the completely assembled and fully charged apparatus shall not weigh more than 18 kg. (40 pounds) regardless of the decrease in weight during use.

§ 84.90 Breathing resistance test; inhalation.

(a) Resistance to inhalation airflow will be measured in the facepiece or mouthpiece while the apparatus is operated by a breathing machine as described in § 84.88.

(b) The inhalation resistance of open-circuit apparatus shall not exceed 32 mm. (1.25 inch) water-column height (at a flow rate of 120 liters per minute).

(c) The inhalation resistance of closed-circuit apparatus shall not exceed the difference between exhalation

resistance (§ 84.91(e)) and 10 cm. (4 inches) water-column height.

§ 84.91 Breathing resistance test; exhalation.

(a) Resistance to exhalation airflow will be measured in the facepiece or mouthpiece of open-circuit apparatus with air flowing at a continuous rate of 85 liters per minute.

(b) The exhalation resistance of demand apparatus shall not exceed 25 mm. (1 inch) water-column height.

(c) The exhalation resistance of pressure-demand apparatus shall not exceed the static pressure in the facepiece by more than 51 mm. (2 inches) water-column height.

(d) The static pressure (at zero flow) in the facepiece shall not exceed 38 mm. (1.5 inches) water-column height.

(e) Resistance to exhalation airflow will be measured in the facepiece or mouthpiece of closed-circuit apparatus with a breathing machine as described in § 84.88, and the exhalation resistance shall not exceed 51 mm. (2 inches) water-column height.

§ 84.92 Exhalation valve leakage test.

(a) Dry exhalation valves and valve seats will be subjected to a suction of 25 mm. (1 inch) water-column height while in a normal operating position.

(b) Leakage between the valve and the valve seat shall not exceed 30 milliliters per minute.

§ 84.93 Gas flow test; open-circuit apparatus.

(a) A static-flow test will be performed on all open-circuit apparatus.

(b) The flow from the apparatus shall be greater than 200 liters per minute when the pressure in the facepiece of demand-apparatus is lowered by 51 mm. (2 inches) water-column height when full container pressure is applied.

(c) Where pressure demand apparatus are tested, the flow will be measured at zero gage pressure in the facepiece.

(d) Where apparatus with compressed-breathing-gas containers are tested, the flow test shall also be made with 3,450 kN/m.^{2} (500 p.s.i.g.) container pressure applied.

§ 84.94 Gas flow test; closed-circuit apparatus.

(a) Where oxygen is supplied by a constant-flow device only, the rate of flow shall be at least 3 liters per minute for the entire rated service time of the apparatus.

(b) Where constant flow is used in conjunction with demand flow, the constant flow shall be greater than 1.5 liters per minute for the entire rated service time.

(c) All demand-flow devices shall provide at least 30 liters of oxygen per minute when in the fully open position.

§ 84.95 Service time test; open-circuit apparatus.

(a) Service time will be measured with a breathing machine as described in § 84.88.

(b) The open-circuit apparatus will be classified according to the length of time it supplies air or oxygen to the breathing machine.

(c) The service time obtained on this test will be used to classify the open-circuit apparatus in accordance with § 84.53.

§ 84.96 Service time test; closed-circuit apparatus.

(a) The closed-circuit apparatus will be classified according to the length of time it supplies adequate breathing gas to the wearer during man test No. 4 described in Table 4 of this subpart.

(b) The service time obtained on man test No. 4 will be used to classify the closed-circuit apparatus in accordance with § 84.53.

§ 84.97 Test for carbon dioxide in inspired gas; open- and closed-circuit apparatus; maximum allowable limits.

(a) *Open-circuit apparatus.* (1) The concentration of carbon dioxide in inspired gas in open-circuit apparatus will be measured at the mouth while the apparatus mounted on a dummy head is operated by a breathing machine. An acceptable method for measuring the concentration of carbon dioxide is described in Bureau of Mines Report of Investigations 6865, A Machine-

Test Method for Measuring Carbon Dioxide in the Inspired Air of Self-Contained Breathing Apparatus, 1966. Copies of Report of Investigations 6865 may be inspected or obtained from the NIOSH, Certification and Quality Assurance Branch, 1095 Willowdale Road, Morgantown, WV. 26505–2888.

(2) The breathing rate will be 14.5 respirations per minute with a minute-volume of 10.5 liters.

(3) A sedentary breathing machine cam will be used.

(4) The apparatus will be tested at a temperature of 27 ± 2° C. (80 ± 5° F.).

(5) A concentration of 5 percent carbon dioxide in air will be exhaled into the facepiece.

(b) *Closed-circuit apparatus.* The concentration of carbon dioxide in inspired gas in closed-circuit apparatus will be measured at the mouth while the parts of the apparatus contributing to dead-air space are mounted on a dummy head and operated by the breathing machine as in paragraphs (a) (1) through (5) of this section.

(c) During the testing required by paragraphs (a) and (b) of this section, the concentration of carbon dioxide in inspired gas at the mouth will be continuously recorded, and the maximum average concentration during the inhalation portion of the breathing cycle shall not exceed the following limits:

Where the service time is	Maximum allowable average concentration of carbon dioxide in inspired air percent by volume
Not more than 30 minutes	2.5
1 hour	2.0
2 hours	1.5
3 hours	1.0
4 hours	1.0

(d) In addition to the test requirements for closed-circuit apparatus set forth in paragraph (b) of this section, gas samples will be taken during the course of the man tests described in Tables 1, 2, 3, and 4 of this subpart. These gas samples will be taken from the closed-circuit apparatus at a point downstream of the carbon dioxide sorbent, and they shall not contain more than 0.5 percent carbon dioxide at any time, except on apparatus for escape only, using a mouthpiece only, the sample shall not contain more than 1.5 percent carbon dioxide at any time.

§ 84.98 Tests during low temperature operation.

(a) The applicant shall specify the minimum temperature for safe operation and two persons will perform the tests described in paragraphs (c) and (d) of this section, wearing the apparatus according to applicant's directions. At the specified temperature, the apparatus shall meet all the requirements described in paragraph (e) of this section.

(b) The apparatus will be precooled at the specified minimum temperature for 4 hours.

(c) The apparatus will be worn in the low temperature chamber for 30 minutes, or for the service time of the apparatus, whichever is less.

(d) During the test period, alternate 1-minute periods of exercise and rest will be required with the exercise periods consisting of stepping onto and off a box 21.5 cm. (8½ inches) high at a rate of 30 cycles per minute.

(e)(1) The apparatus shall function satisfactorily at the specified minimum temperature on duplicate tests.

(2) The wearer shall have sufficient unobscured vision to perform the work.

(3) The wearer shall not experience undue discomfort because of airflow restriction or other physical or chemical changes in the operation of the apparatus.

(f) Auxiliary low-temperature parts which are commercially available to the user may be used on the apparatus to meet the requirements described in paragraph (e) of this section.

§ 84.99 Man tests; testing conditions; general requirements.

(a) The man tests described in Tables 1, 2, 3, and 4 of this subpart represent the workload performed in the mining, mineral, or allied industries by a person wearing the apparatus tested.

(b) The apparatus tested will be worn by Institute personnel trained in the use of self-contained breathing apparatus, and the wearer will, before participating in these tests, pass a physical examination conducted by a qualified physician.

(c) All man tests will be conducted by the Institute.

(d) The apparatus will be examined before each man test to ensure that it is in proper working order.

(e) Breathing resistance will be measured within the facepiece or mouthpiece and the wearer's pulse and respiration rate will be recorded during each 2 minute sample period prescribed in tests 1, 2, 3, and 4.

(f) Man tests 1, 2, 3, 4, 5, and 6 will be conducted in duplicate.

(g) If man tests are not completed through no fault of the apparatus, the test will be repeated.

§ 84.100 Man tests 1, 2, 3, and 4; requirements.

Man tests 1, 2, 3, and 4, set forth in Tables 1, 2, 3, and 4 of this subpart, respectively, prescribe the duration and sequence of specific activities. These tests will be conducted to—

(a) Familiarize the wearer with the apparatus during use;

(b) Provide for a gradual increase in activity;

(c) Evaluate the apparatus under different types of work and physical orientation; and

(d) Provide information on the operating and breathing characteristics of the apparatus during actual use.

§ 84.101 Man test 5; requirements.

(a) Test 5 will be conducted to determine the maximum length of time the apparatus will supply the respiratory needs of the wearer while he is sitting at rest.

(b) The wearer will manipulate the devices controlling the supply of breathing gas to the advantage of the apparatus.

(c) Samples of inspiration from within the apparatus facepiece or mouthpiece shall be taken once every 15 minutes, and shall meet the minimum requirement for oxygen specified in § 84.79(a), and the maximum allowable average concentration of carbon dioxide specified in § 84.97(c).

(d) One sample of inspiration will be taken in the case of 3-, 5-, and 10-minute apparatus.

§ 84.102 Man test 6; requirements.

(a) Man test 6 will be conducted with respect to liquefied breathing gas apparatus only.

(b) This test will be conducted to evaluate operation of the apparatus in other than vertical positions.

(c) The wearer will lie face downward for one-fourth the service life of the apparatus with a full charge of liquefied breathing gas, and then a one-quarter full charge of liquefied breathing gas.

(d) The test will be repeated with the wearer lying on each side and on his back.

(e) The oxygen content of the gas supplied to the wearer by the apparatus will be continuously measured.

§ 84.103 Man tests; performance requirements.

(a) The apparatus shall satisfy the respiratory requirements of the wearer for the classified service time.

(b) Fogging of the eyepiece shall not obscure the wearer's vision, and the wearer shall not experience undue discomfort because of fit or other characteristics of the apparatus.

(c) When the ambient temperature during testing is 24±6 °C. (75±10 °F.), the maximum temperature of inspired air recorded during man tests shall not exceed the following, after correction for deviation from 24 °C. (75 °F.):

Where service life of apparatus is—	Where percent relative humidity of inspired air is—	Maximum permissible temperature of inspired air shall not exceed—	
		°F.	°C.
¼ hour or less	0–100	135	57
¼ hour to ¾ hour	0–50	125	52
	50–100	[1] 110	[1] 43
1 to 2 hours	0–50	115	46
	50–100	[1] 105	[1] 41
3 hours	0–50	110	43
	50–100	[1] 100	[1] 38

Where service life of apparatus is—	Where percent relative humidity of inspired air is—	Maximum permissible temperature of inspired air shall not exceed—	
		°F.	°C.
4 hours	0–50	105	41
	50–100	[1] 95	[1] 35

[1] Where percent relative humidity is 50–100 and apparatus is designed for escape only, these maximum permissible temperatures will be increased by 5°C (10°F).

§ 84.104 Gas tightness test; minimum requirements.

(a) Each apparatus will be tested for tightness by persons wearing it in an atmosphere of 1,000 p.p.m. isoamyl acetate.

(b) Six persons will each wear the apparatus in the test concentrations specified in paragraph (a) of this section for 2 minutes and none shall detect the odor or taste of the test vapor.

TABLES TO SUBPART H OF PART 84

TABLE 1.—DURATION AND SEQUENCE OF SPECIFIC ACTIVITIES FOR TEST 1, IN MINUTES

[42 CFR part 84, subpart H]

Activity	Service time—							
	3 minutes	5 minutes	10 minutes	15 minutes	30 minutes	45 minutes	1 hour	2, 3, and 4 hours
Sampling and readings				2	2	2	2	Perform 1 hour test 2, 3, or 4 times respectively.
Walks at 4.8 km. (3 miles) per hour	3	5	3	4	8	12	18	
Sampling and readings			2	2	2	2	2	
Walks at 4.8 km. (3 miles) per hour			3	5	8	12	18	
Sampling and readings			2	2	2	2	2	
Walks at 4.8 km. (3 miles) per hour					6	13	16	
Sampling and readings					2	2	2	

TABLE 2.—DURATION AND SEQUENCE OF SPECIFIC ACTIVITIES FOR TEST 2, IN MINUTES

[42 CFR part 84, subpart H]

Activity	Service time—							
	3 minutes	5 minutes	10 minutes	15 minutes	30 minutes	45 minutes	1 hour	2, 3 and 4 hours[1]
Sampling and readings				2	2	2	2	2
Walks at 4.8 km. (3 miles) per hour			1	1	3	4	6	10.
Carries 23 kg. (50 pound) weight over overcast			1 time in 2 minutes.	1 time in 2 minutes.	2 times in 4 minutes.	3 times in 6 minutes.	4 times in 8 minutes.	5 times in 10 minutes.
Walks at 4.8 km. (3 miles) per hour				1	3	3	3	5.
Climbs vertical treadmill[2] (or equivalent)	1	1	1	1	1	1	1	1.
Walks at 4.8 km. (3 miles) per hour		1	1			2	3	5
Climbs vertical treadmill (or equivalent)		1				1	1	1.
Sampling and readings					2	2	2	2.
Walks at 4.8 km. (3 miles) per hour				2	2	3	5	11.
Climbs vertical treadmill (or equivalent)				1	1	1	1	1.
Carries 23 kg. (50 pound) weight over overcast				1 time in 2 minutes.	3 times in 6 minutes.	4 times in 8 minutes.	5 times in 10 minutes.	5 times in 10 minutes.
Sampling and readings			2			2	2	2.
Walks at 4.8 km. (3 miles) per hour				1	3	3	3	
Climbs vertical treadmill (or equivalent)			1	1	1	1	1	Then repeat above activities once.
Walks at 4.8 km. (3 miles) per hour			2			2	3.	
Climbs vertical treadmill (or equivalent)						1	1	

Carries 20 kg. (45 pound) weight and walks at 4.8 km. (3 miles) per hour.	1	.....	.....	.....	.....	.....	2 .....
Walks at 4.8 km. (3 miles) per hour	1	2	.....	.....	.....	1	4 .....
Sampling and readings	.....	.....	.....	2	2	2	2 .....

[1] Total test time for Test 2 for 2-hour, 3-hour, and 4-hour apparatus is 2 hours.
[2] Treadmill shall be inclined 15° from vertical and operated at a speed of 1 foot per second.

TABLE 3.—DURATION AND SEQUENCE OF SPECIFIC ACTIVITIES FOR TEST 3, IN MINUTES

[42 CFR part 84, subpart H]

Activity	Service time—							
	3 minutes	5 minutes	10 minutes	15 minutes	30 minutes	45 minutes	1 hour	2, 3 and 4 hours [1]
Sampling and readings	.....	.....	.....	2	2	2	2	([2])
Walks at 4.8 km. (3 miles) per hour	.....	.....	1	1	2	2	3	.....
Runs at 9.7 km. (6 miles) per hour	1	1	1	1	1	1	1	.....
Pulls 20 kg. (45 pound) weight to 5 feet	.....	15 times in 1 minute.	.....	30 times in 2 minutes.	30 times in 2 minutes.	30 times in 2 minutes.	60 times in 6 minutes.	.....
Lies on side	1/2	1	1	2	3	4	5	.....
Lies on back	1/2	1	1	2	2	3	3	.....
Crawls on hands and knees	1	1	1	2	2	2	2	.....
Sampling and readings	.....	.....	2	.....	2	2	2	.....
Runs at 9.7 km. (6 miles) per hour	.....	.....	.....	1	1	1	1	.....
Walks at 4.8 km. (3 miles) per hour	.....	.....	.....	.....	2	8	10	.....
Pulls 20 kg. (45 pound) weight to 5 feet	.....	.....	30 times in 2 minutes.	.....	60 times in 6 minutes.	60 times in 6 minutes.	60 times in 6 minutes.	.....
Sampling and readings	.....	.....	.....	2	.....	2	2	.....
Walks at 4.8 km. (3 miles) per hour	.....	.....	1	.....	3	4	10	.....
Lies on side	.....	.....	.....	.....	.....	2	4	.....
Lies on back	.....	.....	.....	.....	.....	2	1	.....
Sampling and readings	.....	.....	.....	.....	2	2	2	.....

[1] Total test time for Test 3 for 2-hour, 3-hour, and 4-hour apparatus is 2 hours.
[2] Perform test No. 3 for 1 hr. apparatus; then perform test No. 1 for 1 hour apparatus.

TABLE 4.—DURATION AND SEQUENCE OF SPECIFIC ACTIVITIES FOR TEST 4, IN MINUTES

[42 CFR part 84, subpart H]

Activity	Service time—									
	3 minutes	5 minutes	10 minutes	15 minutes	30 minutes	45 minutes	1 hour	2 hours	3 hours	4 hours
Sampling and readings	.....	.....	.....	2	2	2	2	([2])	([3])	([4])
Walks at 4.8 km. (3 miles) per hour.	.....	.....	.....	1	2	2	2	.....	.....	.....
Climbs vertical treadmill [1] (or equivalent).	1	1	1	1	1	1	1	.....	.....	.....

TABLE 4.—DURATION AND SEQUENCE OF SPECIFIC ACTIVITIES FOR TEST 4, IN MINUTES—Continued

[42 CFR part 84, subpart H]

Activity	Service time—									
	3 minutes	5 minutes	10 minutes	15 minutes	30 minutes	45 minutes	1 hour	2 hours	3 hours	4 hours
Walks at 4.8 km. (3 miles) per hour.	.....	1	1	1	2	2	2	.....	.....	.....
Pulls 20 kg. (45 pound) weight to 5 feet.	.....	30 times in 2 minutes.	30 times in 2 minutes.	30 times in 2 minutes.	60 times in 5 minutes.	60 times in 5 minutes.	60 times in 5 minutes.	.....	.....	.....
Walks at 4.8 km. (3 miles) per hour.	.....	.....	1	1	1	2	3	.....	.....	.....
Carries 23 kg. (50 pound) weight over overcast.	.....	.....	.....	1 time in 1 minute.	1 time in 1 minute.	2 times in 3 minutes.	4 times in 8 minutes.	.....	.....	.....
Sampling and readings	.....	.....	2	.....	2	2	2	.....	.....	.....
Walks at 4.8 km. (3 miles) per hour.	.....	.....	.....	1	3	3	4	.....	.....	.....
Runs at 9.7 km. (6 miles) per hour.	.....	1	1	1	1	1	1	.....	.....	.....
Carries 23 kg. (50 pound) weight over overcast.	.....	.....	1 time in 1 minute.	1 time in 1 minute.	2 times in 3 minutes.	4 times in 6 minutes.	6 times in 9 minutes.	.....	.....	.....
Pulls 20 kg (45 pound) weight to 5 feet.	15 times in 1 minute.	.....	.....	15 times in 1 minute.	60 times in 5 minutes.	30 times in 2 minutes.	36 times in 3 minutes.	.....	.....	.....
Sampling and readings	.....	.....	.....	2	2	2	2	.....	.....	.....
Walks at 4.8 km. (3 miles) per hour.	1	.....	1	.....	.....	2	6	.....	.....	
Pulls 20 kg. (45 pound) weight to 5 feet.	.....	.....	.....	.....	.....	60 times in 5 minutes.	60 times in 5 minutes.	.....	.....	.....
Carries 20 kg. (45 pound) weight and walks at 4.8 km. (3 miles) per hour.	.....	.....	.....	.....	.....	3	3	.....	.....	.....
Sampling and readings	.....	.....	.....	.....	.....	2	2	.....	.....	.....

[1] Treadmill shall be inclined 15° from vertical and operated at a speed of 30 cm. (1 foot) per second.
[2] Perform test No. 1 for 30-minute apparatus; then perform test No. 4 for 1-hour apparatus; then perform test No. 1 for 30-minute apparatus.
[3] Perform test No. 1 for 1-hour apparatus; then perform test No. 4 for 1-hour apparatus; then perform test No. 1 for 1-hour apparatus.
[4] Perform test No. 1 for 1-hour apparatus; then perform test No. 4 for 1-hour apparatus; then perform test No. 1 for 1-hour apparatus twice (i.e., two one-hour tests).

Subpart I—Gas Masks

§ 84.110 Gas masks; description.

(a) Gas masks including all completely assembled air purifying masks designed for use as respiratory protection during entry into atmospheres not immediately dangerous to life or health or escape only from hazardous atmospheres containing adequate oxygen to support life are described as follows:

(1) *Front-mounted or back-mounted gas mask.* A gas mask which consists of a full facepiece, a breathing tube, a canister at the front or back, a canister harness, and associated connections.

(2) *Chin-style gas mask.* A gas mask which consists of a full facepiece, a canister which is usually attached to the facepiece, and associated connections.

(3) *Escape gas mask.* A gas mask designed for use during escape only from hazardous atmospheres which consists of a facepiece or mouthpiece, a canister, and associated connections.

(b) Gas masks shall be further described according to the types of gases or vapors against which they are designed to provide respiratory protection, as follows:

Type of front-mounted or back-mounted gas mask:
Acid gas [1 2 3]
Ammonia
Carbon monoxide
Organic Vapor [1 2 3]
Other gas(es) and vapor(s) [1 2 3]
Combination of two or more of the above gases and vapors.[1 2 3]
Combination of acid gas, ammonia, carbon monoxide, and organic vapors.[1 2 3]
Type of chin-style gas mask:
Acid gas [1 2 3]
Ammonia
Carbon monoxide
Organic vapor [1 2 3]
Other gas(es) and vapor [1 2 3]
Combination of two or more of the above gases and vapors.[1 2 3]
Type of escape gas mask:
Acid gas [1 2 3 4]
Ammonia [4]
Carbon monoxide
Organic vapor [1 2 3 4]
Other gas(s) and vapor(s) [1 2 3 4]
Combination of two or more of the above gases and vapors. [1 2 3 4]

[1] Approval may be for acid gases or organic vapors as a class or for specific acid gases or organic vapors.

[2] Not for use against gases or vapors with poor warning properties (except where MSHA or Occupational Safety and Health Administration standards permit such use for a specific gas or vapor), or those which generate high heats or reaction with sorbent materials in the canister.

[3] Use of the gas mask may be limited by factors such as lower explosive limit, toxicological effects, and facepiece fit. Limitations on gas mask service life and sorbent capacity limitations shall be specified by the applicant in instructions for selection, use and maintenance of the gas mask.

[4] Eye protection may be required in certain concentrations of gases and vapors.

(c) Gas masks for respiratory protection against gases and vapors other than those specified in paragraph (b) of this section, may be approved upon submittal of an application in writing for approval to the Certification and Quality Assurance Branch listing the gas or vapor and suggested maximum use concentration for the specific type of gas mask. The Institute will consider the application and accept or reject it on the basis of effect on the wearer's health and safety and any field experience in use of gas masks for such exposures. If the application is accepted, the Institute will test such masks in accordance with the requirements of this subpart.

§ 84.111 Gas masks; required components.

(a) Each gas mask described in § 84.110 shall, where its design requires, contain the following component parts:

(1) Facepiece or mouthpiece and noseclip;

(2) Canister or cartridge;

(3) Canister harness;

(4) External check valve; and

(5) Breathing tube.

(b) The components of each gas mask shall meet the minimum construction requirements set forth in subpart G of this part.

§ 84.112 Canisters and cartridges in parallel; resistance requirements.

Where two or more canisters or cartridges are used in parallel, their resistance to airflow shall be essentially equal.

§ 84.113 Canisters and cartridges; color and markings; requirements.

The color and markings of all canisters and cartridges or labels shall conform with the requirements of the American National Standards Institute, American National Standard for Identification of Air-Purifying Respirator Canisters and Cartridges, ANSI K13.1–1973. ANSI K13.1 is incorporated by reference and has been approved by the Director of the Federal Register in accordance with 5 U.S.C. 552(a) and 1 CFR part 51. Copies may be obtained from American National Standards Institute, Inc., 1430 Broadway, New York, NY 10018. Copies may be inspected at the NIOSH, Certification and Quality Assurance Branch, 1095 Willowdale Road, Morgantown, WV 26505–2888, or at the Office of the Federal Register, 800 North Capitol Street, NW., suite 700, Washington, DC.

§ 84.114 Filters used with canisters and cartridges; location; replacement.

(a) Particulate matter filters used in conjunction with a canister or cartridge shall be located on the inlet side of the canister or cartridge.

(b) Filters shall be incorporated in or firmly attached to the canister or cartridge and each filter assembly shall, where applicable, be designed to permit its easy removal from and replacement in the canister or cartridge.

§ 84.115 Breathing tubes; minimum requirements.

Flexible breathing tubes used in conjunction with gas masks shall be designed and constructed to prevent:

(a) Restriction of free head movement;

(b) Disturbance of the fit of facepieces or mouthpieces;

(c) Interference with the wearer's activities; and

(d) Shutoff of airflow due to kinking, or from chin or arm pressure.

§ 84.116 Harnesses; installation and construction; minimum requirements.

(a) Each gas mask shall, where necessary, be equipped with a suitable harness designed and constructed to hold the components of the gas mask in position against the wearer's body.

(b) Harnesses shall be designed and constructed to permit easy removal and replacement of gas mask parts, and where applicable, provide for holding a full facepiece in the ready position when not in use.

§ 84.117 Gas mask containers; minimum requirements.

(a) Gas masks shall be equipped with a substantial, durable container bearing markings which show the applicant's name, the type and commercial designation of mask it contains and all appropriate approval labels.

(b) Containers for gas masks shall be designed and constructed to permit easy removal of the mask.

§ 84.118 Half-mask facepieces, full facepieces, and mouthpieces; fit; minimum requirements.

(a) Half-mask facepieces and full facepieces shall be designed and constructed to fit persons with various facial shapes and sizes either:

(1) By providing more than one facepiece size; or

(2) By providing one facepiece size which will fit varying facial shapes and sizes.

(b) Full facepieces shall provide for optional use of corrective spectacles or lenses, which shall not reduce the respiratory protective qualities of the gas mask.

(c) Half-mask facepieces shall not interfere with the fit of common industrial safety spectacles, as determined by the Institute's facepiece tests in § 84.124.

(d) Gas masks with mouthpieces shall be equipped with noseclips which are securely attached to the mouthpiece or gas mask and provide an airtight seal.

(e) Facepieces shall be designed to prevent eyepiece fogging.

§ 84.119 Facepieces; eyepieces; minimum requirements.

(a) Full facepieces shall be designed and constructed to provide adequate vision which is not distorted by the eye.

(b) All eyepieces shall be designed and constructed to be impact and penetration resistant. Federal Specification, Mask, Air Line: and Respirator, Air Filtering, Industrial, GGG–M–125d, October 11, 1965 with interim amendment-1, July 30, 1969, is an example of an appropriate standard for determining impact and penetration resistance. Copies of GGG–M–125d may be obtained from the NIOSH, Certification and Quality Assurance Branch, 1095 Willowdale Road, Morgantown, WV 26505–2888.

§ 84.120 Inhalation and exhalation valves; minimum requirements.

(a) Inhalation and exhalation valves shall be provided where necessary and protected against damage and distortion.

(b) Inhalation valves shall be designed and constructed to prevent excessive exhaled air from adversely affecting cartridges, canisters, and filters.

(c) Exhalation valves shall be protected against external influence, and designed and constructed to prevent inward leakage of contaminated air.

§ 84.121 Head harnesses; minimum requirements.

(a) Facepieces shall be equipped with adjustable and replaceable head harnesses, designed and constructed to provide adequate tension during use and an even distribution of pressure over the entire area in contact with the face.

(b) Mouthpieces shall be equipped, where applicable, with adjustable and replaceable harnesses designed and constructed to hold the mouthpiece in place.

§ 84.122 Breathing resistance test; minimum requirements.

(a) Resistance to airflow will be measured in the facepiece or mouthpiece of a gas mask mounted on a breathing machine both before and after each test conducted in accordance with §§ 84.124, 84.125, and 84.126, with air flowing at a continuous rate of 85 liters per minute.

(b) The maximum allowable resistance requirements for gas masks are as follows:

MAXIMUM RESISTANCE

[mm. water-column height]

Type of gas mask	Inhalation		Exhalation
	Initial	Final [1]	
Front-mounted or back-mounted (without particulate filter)	60	75	20
Front-mounted or back-mounted (with approved particulate filter)	70	85	20
Chin-style (without particulate filter)	40	55	20
Chin-style (with approved particulate filter)	65	80	20
Escape (without particulate filter)	60	75	20
Escape (with approved particulate filter)	70	85	20

[1] Measured at end of the service life specified in Tables 5, 6, and 7 of this subpart.

§ 84.123 Exhalation valve leakage test.

(a) Dry exhalation valves and valve seats will be subjected to a suction of 25 mm. water-column height while in a normal operating position.

(b) Leakage between the valve and valve seat shall not exceed 30 milliliters per minute.

§ 84.124 Facepiece tests; minimum requirements.

(a) The complete gas mask will be fitted to the faces of persons having varying facial shapes and sizes.

(b) Where the applicant specifies a facepiece size or sizes for the gas mask, together with the approximate measurements of faces they are designed to fit, the Institute will insure that test

subjects suit such facial measurements.

(c) Any gas mask parts which must be removed to perform the facepiece or mouthpiece fit test shall be replaceable without special tools and without disturbing the facepiece or mouthpiece fit.

(d) The facepiece or mouthpiece fit test, using positive or negative pressure recommended by the applicant and described in his instructions will be used before each test specified in paragraph (e) of this section, and in § 84.125.

(e)(1) Each wearer will enter a chamber containing 100 p.p.m. isoamyl acetate vapor for a half-mask facepiece and 1,000 p.p.m. isoamyl acetate vapor for a full facepiece or mouthpiece.

(2) The facepiece or mouthpiece may be adjusted, if necessary, in the test chamber before starting the tests.

(3) Each wearer will remain in the chamber for 8 minutes while performing the following activities:

(i) Two minutes, nodding and turning head;

(ii) Two minutes, calisthenic arm movements;

(iii) Two minutes, running in place; and

(iv) Two minutes, pumping with a tire pump into a 28 liter (1 cubic foot) container.

(4) Each wearer shall not detect the odor of isoamyl acetate during the test.

§ 84.125 Particulate tests; canisters containing particulate filters; minimum requirements.

Gas mask canisters containing filters for protection against particulates (e.g. dusts, fumes, mists, and smokes) in combination with gases, vapors, or gases and vapors, shall also comply with the requirements as prescribed in §§ 84.170 through 84.183, except for the airflow resistance test of § 84.181.

§ 84.126 Canister bench tests; minimum requirements.

(a)(1) Bench tests, except for carbon monoxide tests, will be made on an apparatus that allows the test atmosphere at 50±5 percent relative humidity and room temperature (25±2.5 °C.) to enter the canister continuously at concentrations and rates of flow specified in Tables 5, 6, and 7 of this subpart.

(2) Three canisters will be removed from containers and tested as received from the applicant.

(3) Two canisters, other than those described in paragraph (a)(2) of this section, will be equilibrated at room temperature by passing 25 percent relative humidity air through them at 64 liters per minute for 6 hours.

(4) Two canisters, other than those described in paragraphs (a) (2) and (3) of this section, will be equilibrated at room temperature by passing 85 percent relative humidity air through them at 64 liters per minute for 6 hours.

(5) The equilibrated canisters will be resealed, kept in an upright position at room temperature, and tested within 18 hours.

(b) Front-mounted and back-mounted gas mask canisters will be tested and shall meet the minimum requirements set forth in Table 5 of this subpart.

(c)(1) Front-mounted, and back-mounted, and chin-style canisters designated as providing respiratory protection against gases, ammonia, organic vapors, carbon monoxide and particulate contaminants shall have a window or other indicator to warn the gas mask wearer when the canister will no longer satisfactorily remove carbon monoxide from the inhaled air.

(2) Other types of front- and back-mounted canisters may also be equipped with a window or other indicator to warn of imminent leakage of other gases or vapors.

(3) The window indicator canisters will be tested as regular canisters, but shall show a satisfactory indicator change or other warning before the allowable canister penetration has occurred.

(d) Chin-style gas mask canisters shall meet the minimum requirements set forth in Table 6 of this subpart.

(e) Escape gas mask canisters shall meet the minimum requirements set forth in Table 7 of this subpart.

TABLES TO SUBPART I OF PART 84

TABLE 5.—CANISTER BENCH TESTS AND REQUIREMENTS FOR FRONT-MOUNTED AND BACK-MOUNTED GAS MASK CANISTERS

[42 CFR part 84, subpart I]

Canister type	Test condition	Test atmosphere			Number of tests	Maximum allowable penetratin (parts per million)	Minimum service life (minutes) [1]
		Gas or vapor	Concentration (parts per million)	Flow rate (liters per minute)			
Acid gas	As received	SO_2	20,000	64	3	5	12
	Equilibrated	Cl_2	20,000	64	3	5	12
		SO_2	20,000	32	4	5	12
		Cl_2	20,000	32	4	5	12
Organic vapor	As received	CCl_4	20,000	64	3	5	12
	Equilibrated	CCl_4	20,000	32	4	5	12
Ammonia	As received	NH_3	30,000	64	3	50	12
	Equilibrated	NH_3	30,000	32	4	50	12
Carbon monoxide	As received	CO	20,000	[4] 64	2	([3])	60
	Equilibrated	CO	5,000	[2] 32	3	([3])	60
		CO	3,000	[2] 32	3	([3])	60
Combination of 2 or 3 of above types [5]							
Combination of all above types [6]							

[1] Minimum life will be determined at the indicated penetration.
[2] Relative humidity of test atmosphere will be 95±3pct; temperature of test atmosphere will be 25±2.5° C.
[3] Maximum allowable CO penetration will be 385 cm^3 during the minimum life. The penetration shall not exceed 500 p/m during this time.
[4] Relative humidity of test atmosphere will be 95±3pct; temperature of test atmosphere entering the test fixture will be 0±2.5°C – 0°C.
[5] Test conditions and requirements will be applicable as shown in this table.
[6] Test conditions and requirements will be applicable as shown in this table, except the minimum service lives for acid gas, organic vapor, and ammonia will be 6 min instead of 12 min.

TABLE 6—Canister Bench Tests and Requirements for Chin-Style Gas Mask Canisters

[42 CFR part 84, subpart I]

Canister type	Test condition	Test atmosphere			Number of tests	Maximum allowable penetration (parts per million)	Minimum service life (minutes) [1]
		Gas or vapor	Concentration (parts per million)	Flow rate (liters per minute)			
Acid gas	As received Equilibrated	SO_2	50,000	64	3	5	12
		Cl_2	5,000	64	3	5	12
		SO_2	5,000	32	4	5	12
		Cl_2	5,000	32	4	5	12
Organic vapor	As received Equilibrated	CCl_4	5,000	64	3	5	12
		CCl_4	5,000	32	4	5	12
Ammonia	As received Equilibrated	NH_3	5,000	64	3	50	12

TABLE 6—Canister Bench Tests and Requirements for Chin-Style Gas Mask Canisters
[42 CFR part 84, subpart I]

Canister type	Test condition	Test atmosphere			Number of tests	Maximum allowable penetration (parts per million)	Minimum service life (minutes) [1]
		Gas or vapor	Concentration (parts per million)	Flow rate (liters per minute)			
	As received Equilibrated	NH_3	5,000	32	4	50	12
Carbon monoxide	As received	CO	20,000	[2] 64	2	([3])	60
		CO	5,000	[4] 32	3	([3])	60
		CO	3,000	[2] 32	3	([3])	60
Combination of 2 or 3 of above types [5]							
Combination of all above types [6]							

[1] Minimum life will be determined at the indicated penetration.
[2] Relative humidity of test atmosphere will be 95 ± 3pct; temperature of test atmosphere will be 25 ± 2.5° C.
[3] Maximum allowable CO penetration will be 385 cm^3 during the minimum life. The penetration shall not exceed 500 p/m during this time.
[4] Relative humidity of test atmosphere will be 95 ± 3pct; temperature of test atmosphere entering the test fixture will be 0 ± 2.5° C – 0° C.
[5] Test conditions and requirements will be applicable as shown in this table.
[6] Test conditions and requirements will be applicable as shown in this table, except the minimum service lives for acid gas, organic vapor, and ammonia will be 6 min instead of 12 min.

TABLE 7.—CANISTER BENCH TESTS AND REQUIREMENTS FOR ESCAPE GAS MASK CANISTERS
[42 CFR part 84, subpart I]

Canister type	Test condition	Test atmosphere			Number of tests	Maximum allowable penetration (parts per million)	Minimum service life (minutes) [1]
		Gas or vapor	Concentration (parts per million)	Flow rate (liters per minute)			
Acid gas	As received	SO_2	5,000	64	3	5	12
	Equilibrated	Cl_2	5,000	64	3	5	12
		SO_2	5,000	32	4	5	12
		Cl_2	5,000	32	4	5	12
Organic vapor	As received	CCl_4	5,000	64	3	5	12
	Equilibrated	CCl_4	5,000	32	4	5	12
Ammonia	As received	NH_3	5,000	64	3	50	12
	Equilibrated	NH_3	5,000	32	4	50	12
Carbon monoxide	As received	CO	10,000	[2] 32	2	([3])	[4] 60
		CO	5,000	[5] 32	3	([3])	60
		CO	3,000	[2] 32	3	([3])	60

[1] Minimum life will be determined at the indicated penetration.
[2] Relative humidity of test atmosphere will be 95 ± 3pct; temperature of test atmosphere will be 25±2.5° C.
[3] Maximum allowable CO penetration will be 385 cm^3 during the minimum life. The penetration shall not exceed 500 p/m during this time.
[4] If effluent temperature exceeds 100° C during this test, the escape gas mask shall be equipped with an effective heat exchanger.
[5] Relative humidity of test atmosphere will be 95±3 pct; temperature of test atmosphere entering the test fixture will be 0±2.5° C—0° C.

Subpart J—Supplied-Air Respirators

§ 84.130 Supplied-air respirators; description.

Supplied-air respirators, including all completely assembled respirators designed for use as respiratory protection during entry into and escape from atmospheres not immediately dangerous to life or health are described as follows:

(a) *Type ''A'' supplied-air respirators.* A hose mask respirator, for entry into and escape from atmospheres not immediately dangerous to life or health, which consists of a motor-driven or hand-operated blower that permits the free entrance of air when the blower is not operating, a strong large-diameter hose having a low resistance to airflow, a harness to which the hose and the life-line are attached and a tight-fitting facepiece.

(b) *Type ''AE'' supplied-air respirators.* A Type ''A'' supplied-air respirator equipped with additional devices designed to protect the wearer's head and neck against impact and abrasion from rebounding abrasive material, and with shielding material such as plastic, glass, woven wire, sheet metal, or other suitable material to protect the window(s) of facepieces, hoods, and helmets which do not unduly interfere with the wearer's vision and permit easy access to the external surface of such window(s) for cleaning.

(c) *Type ''B'' supplied-air respirators.* A hose mask respirator, for entry into and escape from atmospheres not immediately dangerous to life or health, which consists of a strong large-diameter hose with low resistance to airflow through which the user draws inspired air by means of his lungs alone, a harness to which the hose is attached, and a tight-fitting facepiece.

(d) *Type ''BE'' supplied-air respirators.* A type ''B'' supplied-air respirator equipped with additional devices designed to protect the wearer's head and neck against impact and abrasion from rebounding abrasive material, and with shielding material such as plastic, glass, woven wire, sheet metal, or other suitable material to protect the window(s) of facepieces, hoods, and helmets which do not unduly interfere with the wearer's vision and permit easy access to the external surface of such window(s) for cleaning.

(e) *Type ''C'' supplied-air respirators.* An airline respirator, for entry into and escape from atmospheres not immediately dangerous to life or health, which consists of a source of respirable breathing air, a hose, a detachable coupling, a control valve, orifice, a demand valve or pressure demand valve, an arrangement for attaching the hose to the wearer, and a facepiece, hood, or helmet.

(f) *Type ''CE'' supplied-air respirators.* A type ''C'' supplied-air respirator equipped with additional devices designed to protect the wearer's head and neck against impact and abrasion from rebounding abrasive material, and with shielding material such as plastic, glass, woven wire, sheet metal, or other suitable material to protect the window(s) of facepieces, hoods, and helmets which do not unduly interfere with the wearer's vision and permit easy access to the external surface of such window(s) for cleaning.

§ 84.131 Supplied-air respirators; required components.

(a) Each supplied-air respirator described in § 84.130 shall, where its design requires, contain the following component parts:

(1) Facepiece, hood, or helmet;

(2) Air supply valve, orifice, or demand or pressure-demand regulator;

(3) Hand operated or motor driven air blower;

(4) Air supply hose;

(5) Detachable couplings;

(6) Flexible breathing tube; and

(7) Respirator harness.

(b) The component parts of each supplied-air respirator shall meet the minimum construction requirements set forth in subpart G of this part.

§ 84.132 Breathing tubes; minimum requirements.

Flexible breathing tubes used in conjunction with supplied-air respirators shall be designed and constructed to prevent:

(a) Restriction of free head movement;

(b) Disturbance of the fit of facepieces, mouthpieces, hoods, or helmets;

(c) Interference with the wearer's activities; and

(d) Shutoff of airflow due to kinking, or from chin or arm pressure.

§ 84.133 Harnesses; installation and construction; minimum requirements.

(a) Each supplied-air respirator shall, where necessary, be equipped with a suitable harness designed and constructed to hold the components of the respirator in position against the wearer's body.

(b) Harnesses shall be designed and constructed to permit easy removal and replacement of respirator parts, and where applicable, provide for holding a full facepiece in the ready position when not in use.

§ 84.134 Respirator containers; minimum requirements.

Supplied-air respirators shall be equipped with a substantial, durable container bearing markings which show the applicant's name, the type and commercial designation of the respirator it contains, and all appropriate approval labels.

§ 84.135 Half-mask facepieces, full facepieces, hoods, and helmets; fit; minimum requirements.

(a) Half-mask facepieces and full facepieces shall be designed and constructed to fit persons with various facial shapes and sizes either:

(1) By providing more than one facepiece size; or

(2) By providing one facepiece size which will fit varying facial shapes and sizes.

(b) Full facepieces shall provide for optional use of corrective spectacles or lenses, which shall not reduce the respiratory protective qualities of the respirator.

(c) Hoods and helmets shall be designed and constructed to fit persons with various head sizes, provide for the optional use of corrective spectacles or lenses, and insure against any restriction of movement by the wearer.

(d) Facepieces, hoods, and helmets shall be designed to prevent eyepiece fogging.

§ 84.136 Facepieces, hoods, and helmets; eyepieces; minimum requirements.

(a) Facepieces, hoods, and helmets shall be designed and constructed to provide adequate vision which is not distorted by the eyepiece.

(b) All eyepieces except those on Types B, BE, C, and CE supplied-air respirators shall be designed and constructed to be impact and penetration resistant. Federal Specification, Mask, Air Line: and Respirator, Air Filtering, Industrial, GGG–M–125d, October 11, 1965 with interim amendment-1, July 30, 1969, is an example of an appropriate standard for determining impact and penetration resistance. Copies of GGG–M–125d may be obtained from the NIOSH, Certification and Quality Assurance Branch, 1095 Willowdale Road, Morgantown, WV 26505–2888.

(c)(1) The eyepieces of AE, BE, and CE type supplied-air respirators shall be shielded by plastic, glass, woven wire, sheet metal, or other suitable material which does not interfere with the vision of the wearer.

(2) Shields shall be mounted and attached to the facepiece to provide easy access to the external surface of the eyepiece for cleaning.

§ 84.137 Inhalation and exhalation valves; check valves; minimum requirements.

(a) Inhalation and exhalation valves shall be provided where necessary and protected against distortion.

(b) Exhalation valves shall be:

(1) Protected against damage and external influence; and

(2) Designed and constructed to prevent inward leakage of contaminated air.

(c) Check valves designed and constructed to allow airflow toward the facepiece only shall be provided in the connections to the facepiece or in the hose fitting near the facepiece of all Type A, AE, B, and BE supplied-air respirators.

§ 84.138 Head harnesses; minimum requirements.

Facepieces shall be equipped with adjustable and replaceable head harnesses which are designed and constructed to provide adequate tension

during use, and an even distribution of pressure over the entire area in contact with the face.

§ 84.139 Head and neck protection; supplied-air respirators; minimum requirements.

Type AE, BE, and CE supplied-air respirators shall be designed and constructed to provide protection against impact and abrasion from rebounding abrasive materials to the wearer's head and neck.

§ 84.140 Air velocity and noise levels; hoods and helmets; minimum requirements.

Noise levels generated by the respirator will be measured inside the hood or helmet at maximum airflow obtainable within pressure and hose length requirements and shall not exceed 80 dBA.

§ 84.141 Breathing gas; minimum requirements.

(a) Breathing gas used to supply supplied-air respirators shall be respirable breathing air and contain no less than 19.5 volume-percent of oxygen.

(b) Compressed, gaseous breathing air shall meet the applicable minimum grade requirements for Type I gaseous air set forth in the Compressed Gas Association Commodity Specification for Air, G–7.1, 1966 (Grade D or higher quality). G–7.1 is incorporated by reference and has been approved by the Director of the Federal Register in accordance with 5 U.S.C. 552(a) and 1 CFR part 51. Copies may be obtained from American National Standards Institute, Inc., 1430 Broadway, New York, NY 10018. Copies may be inspected at the NIOSH, Certification and Quality Assurance Branch, 1095 Willowdale Road, Morgantown, WV 26505–2888, or at the Office of the Federal Register, 800 North Capitol Street, NW., suite 700, Washington, DC.

(c) Compressed, liquefied breathing air shall meet the applicable minimum grade requirements for Type II liquid air set forth in the Compressed Gas Association Commodity Specification for Air, G–7.1, 1966 (Grade B or higher quality). G–7.1 is incorporated by reference and has been approved by the Director of the Federal Register in accordance with 5 U.S.C. 552(a) and 1 CFR part 51. Copies may be obtained from American National Standards Institute, Inc., 1430 Broadway, New York, NY 10018. Copies may be inspected at the NIOSH, Certification and Quality Assurance Branch, 1095 Willowdale Road, Morgantown, WV 26505–2888, or at the Office of the Federal Register, 800 North Capitol Street, NW., suite 700, Washington, DC.

§ 84.142 Air supply source; hand-operated or motor driven air blowers; Type A supplied-air respirators; minimum requirements.

(a) Blowers shall be designed and constructed to deliver an adequate amount of air to the wearer with either direction of rotation, unless constructed to permit rotation in one direction only, and to permit the free entrance of air to the hose when the blower is not operated.

(b) No multiple systems, whereby more than one user is supplied by one blower, will be approved, unless each hose line is connected directly to a manifold at the blower.

§ 84.143 Terminal fittings or chambers; Type B supplied-air respirators; minimum requirements.

(a) Blowers or connections to air supplies providing positive pressures shall not be approved for use on Type B supplied-air respirators.

(b) Terminal fittings or chambers employed in Type B supplied-air respirators, shall be:

(1) Installed in the inlet of the hose.

(2) Designed and constructed to provide for the drawing of air through corrosion resistant material arranged so as to be capable of removing material larger than 0.149 mm. in diameter (149 micrometers, 100-mesh, U.S. Standard sieve).

(3) Installed to provide a means for fastening or anchoring the fitting or chamber in a fixed position in a zone of respirable air.

§ 84.144 Hand-operated blower test; minimum requirements.

(a) Hand-operated blowers shall be tested by attaching them to a mechanical drive and operating them 6 to 8 hours daily for a period of 100 hours at a speed necessary to deliver 50 liters of

air per minute through each completely assembled respirator. Each respirator shall be equipped with the maximum length of hose with which the device is to be approved and the hose shall be connected to each blower or manifold outlet designed for hose connections.

(b) The crank speed of the hand-operated blower shall not exceed 50 revolutions per minute in order to deliver the required 50 liters of air per minute to each facepiece.

(c) The power required to deliver 50 liters of air per minute to each wearer through the maximum length of hose shall not exceed one-fiftieth horsepower, and the torque shall not exceed a force of 2.3 kg. (5 pounds) on a 20 cm. (8-inch) crank, as defined in § 84.146.

(d) The blower shall operate throughout the period without failure or indication of excessive wear of bearings or other working parts.

§ 84.145 Motor-operated blower test; minimum requirements.

(a) Motor-operated blowers shall be tested by operating them at their specified running speed 6 to 8 hours daily for a period of 100 hours when assembled with the kind and maximum length of hose for which the device is to be approved and when connected to each blower or manifold outlet designed for hose connections.

(b) The connection between the motor and the blower shall be so constructed that the motor may be disengaged from the blower when the blower is operated by hand.

(c) The blower shall operate throughout the period without failure or indication of excessive wear of bearings or other working parts.

(d) Where a blower, which is ordinarily motor driven, is operated by hand, the power required to deliver 50 liters of air per minute to each wearer through the maximum length of hose shall not exceed one-fiftieth horsepower, and the torque shall not exceed a force of 2.3 kg. (5 pounds) on a 20 cm. (8-inch) crank, as defined in § 84.146.

(e) Where the respirator is assembled with the facepiece and 15 m. (50 feet) of the hose for which it is to be approved, and when connected to one outlet with all other outlets closed and operated at a speed not exceeding 50 revolutions of the crank per minute, the amount of air delivered into the respiratory-inlet covering shall not exceed 150 liters per minute.

§ 84.146 Method of measuring the power and torque required to operate blowers.

As shown in Figure 1 of this section, the blower crank is replaced by a wooden drum, a (13 cm. (5 inches) in diameter is convenient). This drum is wound with about 12 m. (40 feet) of No. 2 picture cord, b. A weight, c, of sufficient mass to rotate the blower at the desired speed is suspended from this wire cord. A mark is made on the cord about 3 to 4.5 m. (10 to 15 feet) from the weight, c. Another mark is placed at a measured distance (6–9 m./20–30 feet is convenient) from the first. These are used to facilitate timing. To determine the torque or horsepower required to operate the blower, the drum is started in rotation manually at or slightly above the speed at which the power measurement is to be made. The blower is then permitted to assume constant speed, and then as the first mark on the wire leaves the drum, a stopwatch is started. The watch is stopped when the second mark leaves the drum. From these data the foot-pounds per minute and the torque may be calculated.

FIGURE 1—APPARATUS FOR MEASURING POWER REQUIRED TO OPERATE BLOWER. (42 CFR PART 84, SUBPART J, §84.146)

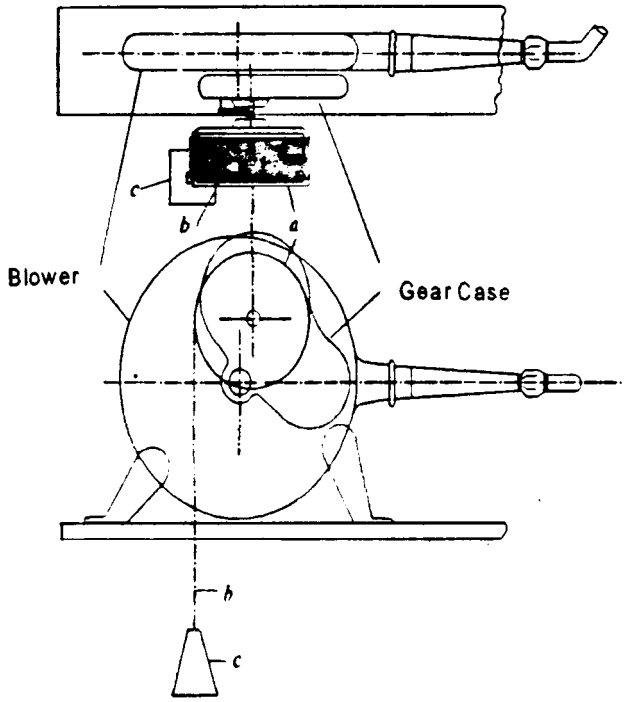

§84.147 Type B supplied-air respirator; minimum requirements.

No Type B supplied-air respirator shall be approved for use with a blower or with connection to an air supply device at positive pressures.

§84.148 Type C supplied-air respirator, continuous flow class; minimum requirements.

(a) Respirators tested under this section shall be approved only when they supply respirable air at the pressures and quantities required.

(b) The pressure at the inlet of the hose connection shall not exceed 863 kN/m.^{2} (125 pounds per square inch gage).

(c) Where the pressure at any point in the supply system exceeds 863 kN/m.^{2} (125 pounds per square inch gage), the respirator shall be equipped with a pressure-release mechanism that will prevent the pressure at the hose connection from exceeding 863 kN/m.^{2} (125 pounds per square inch gage) under any conditions.

§84.149 Type C supplied-air respirator, demand and pressure demand class; minimum requirements.

(a) Respirators tested under this section shall be approved only when used to supply respirable air at the pressures and quantities required.

(b) The manufacturer shall specify the range of air pressure at the point of attachment of the air-supply hose to the air-supply system, and the range of hose length for the respirator. For example, he might specify that the respirator be used with compressed air at pressures ranging from 280–550 kN/m.^{2} (40 to 80 pounds per square inch) with from 6 to 76 m. (15 to 250 feet) of air-supply hose.

(c) The specified air pressure at the point of attachment of the hose to the air-supply system shall not exceed 863 kN/m.^{2} (125 pounds per square inch gage).

(d)(1) Where the pressure in the air-supply system exceeds 863 kN/m.^{2} (125 pounds per square inch gage), the respirator shall be equipped with a pressure-release mechanism that will prevent the pressure at the point of attachment of the hose to the air-supply system from exceeding 863 kN/m.^{2} (125 pounds per square inch gage).

(2) The pressure-release mechanism shall be set to operate at a pressure not more than 20 percent above the manufacturer's highest specified pressure. For example, if the highest specified pressure is 863 kN/m.^{2} (125 pounds per square inch), the pressure-release mechanism would be set to operate at a maximum of 1,035 kN/m.^{2} (150 pounds per square inch).

§ 84.150 Air-supply line tests; minimum requirements.

Air supply lines employed on Type A, Type B, and Type C supplied-air respirators shall meet the minimum test requirements set forth in Table 8 of this subpart.

§ 84.151 Harness test; minimum requirements.

(a)(1) Shoulder straps employed on Type A supplied-air respirators shall be tested for strength of material, joints, and seams and must separately withstand a pull of 113 kg. (250 pounds) for 30 minutes without failure.

(2) Belts, rings, and attachments for life lines must withstand a pull of 136 kg. (300 pounds) for 30 minutes without failure.

(3) The hose shall be firmly attached to the harness so as to withstand a pull of 113 kg. (250 pounds) for 30 minutes without separating, and the hose attachments shall be arranged so that the pull or drag of the hose behind an advancing wearer does not disarrange the harness or exert pull upon the facepiece.

(4) The arrangement and suitability of all harness accessories and fittings will be considered.

(b)(1) The harness employed on Type B supplied-air respirators shall not be uncomfortable, disturbing, or interfere with the movements of the wearer.

(2) The harness shall be easily adjustable to various sizes.

(3) The hose shall be attached to the harness in a manner that will withstand a pull of 45 kg. (100 pounds) for 30 minutes without separating or showing signs of failure.

(4) The design of the harness and attachment of the line shall permit dragging the maximum length of hose considered for approval over a concrete floor without disarranging the harness or exerting a pull on the facepiece.

(5) The arrangement and suitability of all harness accessories and fittings will be considered.

(c) The harness employed on Type C respirators shall be similar to that required on the Type B respirator, or, it may consist of a simple arrangement for attaching the hose to a part of the wearer's clothing in a practical manner that prevents a pull equivalent to dragging the maximum length of the hose over a concrete floor from exerting pull upon the respiratory-inlet covering.

(d) Where supplied-air respirators have a rigid or partly rigid head covering, a suitable harness shall be required to assist in holding this covering in place.

§ 84.152 Breathing tube test; minimum requirements.

(a)(1) Type A and Type B supplied-air respirators shall employ one or two flexible breathing tubes of the nonkinking type which extend from the facepiece to a connecting hose coupling attached to the belt or harness.

(2) The breathing tubes employed shall permit free head movement, insure against closing off by kinking or by chin or arm pressure, and they shall not create a pull that will loosen the facepiece or disturb the wearer.

(b) Breathing tubes employed on Type C supplied-air respirators of the continuous flow class shall meet the minimum requirements set forth in paragraph (a) of this section, however, an extension of the connecting hose may be employed in lieu of the breathing tubes required.

(c)(1) A flexible, nonkinking type breathing tube shall:

(i) Be employed on Type C supplied-air respirators of the demand and pressure-demand class; and

(ii) Extend from the facepiece to the demand or pressure-demand valve, except where the valve is attached directly to the facepiece.

(2) The breathing tube shall permit free head movement, insure against closing off by kinking or by chin or arm pressure, and shall not create a pull that will loosen the facepiece or disturb the wearer.

§ 84.153 Airflow resistance test, Type A and Type AE supplied-air respirators; minimum requirements.

(a) Airflow resistance will be determined when the respirator is completely assembled with the respiratory-inlet covering, the air-supply device, and the maximum length of air-supply hose coiled for one-half its length in loops 1.5 to 2.1 m. (5 to 7 feet) in diameter.

(b) The inhalation resistance, drawn at the rate of 85 liters (3 cubic feet) per minute when the blower is not operating or under any practical condition of blower operation shall not exceed the following amounts:

Maximum length of hose for which respirator is approved		Maximum resistance, water column height	
Feet	Meters	Inches	Millimeters
75	23	1.5	38
150	46	2.5	64
250	76	3.5	89
300	91	4.0	102

(c) The exhalation resistance shall not exceed 25 mm. (1 inch) of water-column height at a flow rate of 85 liters (3 cubic feet) per minute when the blower is not operating or under any practical condition of blower operation.

§ 84.154 Airflow resistance test; Type B and Type BE supplied-air respirators; minimum requirements.

(a) Airflow resistance shall be determined when the respirator is completely assembled with the respiratory-inlet covering and the hose in the maximum length to be considered for approval, coiled in loops 1.5 to 2.1 m. (5 to 7 feet) in diameter.

(b) Airflow resistance shall not exceed 38 mm. (1.5 inches) of water-column height to air drawn at the flow rate of 85 liters (3 cubic feet) per minute.

(c) The exhalation resistance shall not exceed 25 mm. (1 inch) of water-column height at this flow rate.

§ 84.155 Airflow resistance test; Type C supplied-air respirator, continuous flow class and Type CE supplied-air respirator; minimum requirements.

The resistance to air flowing from the respirator shall not exceed 25 mm. (1 inch) of water-column height when the air flow into the respiratory-inlet covering is 115 liters (4 cubic feet) per minute.

§ 84.156 Airflow resistance test; Type C supplied-air respirator, demand class; minimum requirements.

(a) Inhalation resistance shall not exceed 50 millimeters (2 inches) of water at an air flow of 115 liters (4 cubic feet) per minute.

(b) The exhalation resistance to a flow of air at a rate of 85 liters (3 cubic feet) per minute shall not exceed 25 millimeters (1 inch) of water.

§ 84.157 Airflow resistance test; Type C supplied-air respirator, pressure-demand class; minimum requirements.

(a) The static pressure in the facepiece shall not exceed 38 mm. (1.5 inches) of water-column height.

(b) The pressure in the facepiece shall not fall below atmospheric at inhalation airflows less than 115 liters (4 cubic feet) per minute.

(c) The exhalation resistance to a flow of air at a rate of 85 liters (3 cubic feet) per minute shall not exceed the static pressure in the facepiece by more than 51 mm. (2 inches) of water-column height.

§ 84.158 Exhalation valve leakage test.

(a) Dry exhalation valves and valve seats will be subjected to a suction of 25 mm. water-column height while in a normal operating position.

(b) Leakage between the valve and valve seat shall not exceed 30 milliliters per minute.

§ 84.159 Man tests for gases and vapors; supplied-air respirators; general performance requirements.

(a) Wearers will enter a chamber containing a gas or vapor as prescribed in §§ 84.160, 84.161, 84.162, and 84.163.

(b) Each wearer will spend 10 minutes in work to provide observations on freedom of the device from leakage. The freedom and comfort allowed the wearer will also be considered.

(c) Time during the test period will be divided as follows:

(1) *Five minutes.* Walking, turning head, dipping chin; and

(2) *Five minutes.* Pumping air with a tire pump into a 28-liter (1 cubic foot) container, or equivalent work.

(d) No odor of the test gas or vapor shall be detected by the wearer in the air breathed during any such test, and the wearer shall not be subjected to any undue discomfort or encumbrance because of the fit, air delivery, or other features of the respirator during the testing period.

§ 84.160 Man test for gases and vapors; Type A and Type AE respirators; test requirements.

(a) The completely assembled respirator will be worn in a chamber containing 0.1±0.025 percent isoamyl acetate vapor, and the blower, the intake of the hose, and not more than 25 percent of the hose length will be located in isoamyl acetate-free air.

(b) The man in the isoamyl acetate atmosphere will draw his inspired air through the hose, connections, and all parts of the air device by means of his lungs alone (blower not operating).

(c) The 10-minute work test will be repeated with the blower in operation at any practical speed up to 50 revolutions of the crank per minute.

§ 84.161 Man test for gases and vapors; Type B and Type BE respirators; test requirements.

(a) The completely assembled respirator will be worn in a chamber containing 0.1±0.025 percent isoamyl acetate vapor, and the intake of the hose, and not more than 25 percent of the hose length will be located in isoamyl acetate-free air.

(b) The man in the isoamyl acetate atmosphere will draw his inspired air through the hose and connections by means of his lungs alone.

§ 84.162 Man test for gases and vapors; Type C respirators, continuous-flow class and Type CE supplied-air respirators; test requirements.

(a) The completely assembled respirator will be worn in a chamber containing 0.1±0.025 percent isoamyl acetate vapor, the intake of the hose will be connected to a suitable source of respirable air, and not more than 25 percent of the hose length will be located in isoamyl acetate-free air.

(b) The minimum flow of air required to maintain a positive pressure in the respiratory-inlet covering throughout the entire breathing cycle will be supplied to the wearer, provided however, that airflow shall not be less than 115 liters per minute for tight-fitting and not less than 170 liters per minute for loose-fitting respiratory inlet-coverings.

(c) The test will be repeated with the maximum rate of flow attainable within specified operating pressures.

§ 84.163 Man test for gases and vapors; Type C supplied-air respirators, demand and pressure-demand classes; test requirements.

(a) The completely assembled respirator will be worn in a chamber containing 0.1±0.025 percent isoamyl acetate vapor, the intake of the hose will be connected to a suitable source of respirable air, and not more than 25 percent of the hose length will be located in isoamyl acetate-free air.

(b) The test will be conducted at the minimum pressure with the maximum hose length and will be repeated at the maximum pressure with the minimum hose length.

TABLES TO SUBPART J OF PART 84

TABLE 8—AIR-SUPPLY-LINE REQUIREMENTS AND TESTS

[42 CFR part 84, subpart J]

Specific requirements	Requirements for the air-supply lines of the indicated type of supplied-air respirators		
	Type A	Type B	Type C
Length of hose	Maximum of 91 m. (300 feet), in multiples of 7.6 m. (25 feet).	Maximum of 23 m. (75 feet) in multiples of 7.6 m. (25 feet).	Maximum of 91 m. (300 feet) in multiples of 7.6 m. (25 feet). It will be permissible for the applicant to supply hose of the approved type of shorter length than 7.6 m. (25 feet) provided it meets the requirements of the part.
Air flow	None	None	The air-supply hose with air regulating valve or orifice shall permit a flow of not less than 115 liters (4 cubic feet) per minute to tight-fitting and 170 liters (6 cubic feet) per minute to loose-fitting respiratory-inlet coverings through the maximum length of hose for which approval is granted and at the minimum specified air-supply pressure. The maximum flow shall not exceed 425 liters (15 cubic feet) per minute at the maximum specified air-supply pressure with the minimum length of hose for which approval is granted.
Air flow	.....do	.....do	The air-supply hose, detachable coupling, and demand valve of the demand class or pressure-demand valve of the pressure-demand class for Type C supplied-air respirators, demand and pressure-demand classes, shall be capable of delivering respirable air at a rate of not less than 115 liters (4 cubic feet) per minute to the respiratory-inlet covering at an inhalation resistance not exceeding 50 millimeters (2 inches) of water-column height measured in the respiratory-inlet covering with any combination of air-supply pressure and length of hose within the applicant's specified range of pressure and hose length. The airflow rate and resistance to inhalation shall be measured while the demand or pressure-demand valve is actuated 20 times per minute by a source of intermittent suction. The maximum rate of flow to the respiratory-inlet covering shall not exceed 425 liters (15 cubic feet) per minute under the specified operating conditions.

TABLE 8—AIR-SUPPLY-LINE REQUIREMENTS AND TESTS—Continued

[42 CFR part 84, subpart J]

Specific requirements	Requirements for the air-supply lines of the indicated type of supplied-air respirators		
	Type A	Type B	Type C
Air-regulating valve	.....do	.....do	If an air-regulating valve is provided, it shall be so designed that it will remain at a specific adjustment, which will not be affected by the ordinary movement of the wearer. The valve must be so constructed that the air supply with the maximum length of hose and at the minimum specified air-supply pressure will not be less than 115 liters (4 cubic feet) of air per minute to tight-fitting and 170 liters (6 cubic feet) of air per minute of loose-fitting respiratory inlet coverings for any adjustment of the valve. If a demand or pressure-demand valve replaces the air-regulating valve, it shall be connected to the air-supply at the maximum air pressure for which approval is sought by means of the minimum length of air-supply hose for which approval is sought. The outlet of the demand or pressure-demand valve shall be connected to a source of intermittent suction so that the demand or pressure-demand valve is actuated approximately 20 times per minute for a total of 100,000 inhalations. To expedite this test, the rate of actuation may be increased if mutually agreeable to the applicant and NIOSH. During this test the valve shall function without failure and without excessive wear of the moving parts. The demand or pressure-demand valve shall not be damaged in any way when subjected at the outlet to a pressure or suction of 25 cm. (10 inches) of water gage for 2 minutes.
Noncollapsibility	The hose shall not collapse or exhibit permanent deformation when a force of 90 kg. (200 pounds) is applied for 5 minutes between 2 planes 7.6 cm. (3 inches) wide on opposite sides of the hose.	Same as Type A	None.
Nonkinkability	None	None	A 7.6 m. (25 foot) section of the hose will be placed on a horizontal-plane surface and shaped into a one-loop coil with one end of the hose connected to an airflow meter and the other end of the hose supplied with air at the minimum specified supply pressure. The connection shall be in the plane of the loop. The other end of the hose will be pulled tangentially to the loop and in the plane of the loop until the hose straightens. To meet the requirements of this test the loop shall maintain a uniform near-circular shape and ultimately unfold as a spiral, without any localized deformation that decreases the flow of air to less than 90 percent of the flow when the hose is tested while remaining in a straight line.
Strength of hose and couplings.	Hose and couplings shall not separate or fail when tested with a pull of 113 kg. (250 pounds) for 5 minutes.	Same as Type A	Hose and couplings shall not exhibit any separation or failure when tested with a pull of 45 kg. (100 pounds) for 5 minutes and when tested by subjecting them to an internal air pressure of 2 times the maximum respirator-supply pressure that is specified by the applicant or at 173 kN/m. 2 (25 pounds per square inch) gage, whichever is higher.

TABLE 8—AIR-SUPPLY-LINE REQUIREMENTS AND TESTS—Continued

[42 CFR part 84, subpart J]

Specific requirements	Requirements for the air-supply lines of the indicated type of supplied-air respirators		
	Type A	Type B	Type C
Tightness	No air leakage shall occur when the hose and couplings are joined and the joint(s) are immersed in water and subjected to an internal air pressure of 35 kN/m. 2 (5 pounds per square inch) gage.	None	Leakage of air exceeding 50 cc. per minute at each coupling shall not be permitted when the hose and couplings are joined and are immersed in water, with air flowing through the respirator under a pressure of 173 kN/m. 2 (25 pounds per square inch) gage applied to the inlet end of the air-supply hose, or at twice the maximum respirator-supply pressure that is specified by the applicant, whichever is higher.
Permeation of hose by gasoline.	The permeation of the hose by gasoline will be tested by immersing 7.6 m. (25 feet) of hose and one coupling in gasoline, with air flowing through the hose at the rate of 8 liters per minute for 6 hours. The air from the hose shall not contain more than 0.01 percent by volume of gasoline vapor at the end of the test.	Same as for Type A	Same as for Type A, except the test period shall be 1 hour.
Detachable coupling	None	None	A hand-operated detachable coupling by which the wearer can readily attach or detach the connecting hose shall be provided at a convenient location. This coupling shall be durable, remain connected under all conditions of normal respirator use, and meet the prescribed tests for strength and tightness of hose and couplings.

Subpart K—Non-Powered Air-Purifying Particulate Respirators

§ 84.170 Non-powered air-purifying particulate respirators; description.

(a) Non-powered air-purifying particulate respirators utilize the wearer's negative inhalation pressure to draw the ambient air through the air-purifying filter elements (filters) to remove particulates from the ambient air. They are designed for use as respiratory protection against atmospheres with particulate contaminants (e.g., dusts, fumes, mists) that are not immediately dangerous to life or health and that contain adequate oxygen to support life.

(b) Non-powered air-purifying particulate respirators are classified into three series, N-, R-, and P-series. The N-series filters are restricted to use in those workplaces free of oil aerosols. The R- and P-series filters are intended for removal of any particulate that includes oil-based liquid particulates.

(c) Non-powered air-purifying particulate respirators are classified according to the efficiency level of the filter(s) as tested according to the requirements of this part.

(1) N100, R100, and P100 filters shall demonstrate a minimum efficiency level of 99.97 percent.

(2) N99, R99, and P99 filters shall demonstrate a minimum efficiency level of 99 percent.

(3) N95, R95, and P95 filters shall demonstrate a minimum efficiency level of 95 percent.

§ 84.171 Non-powered air-purifying particulate respirators; required components.

(a) Each non-powered air-purifying particulate respirator described in § 84.170 shall, where its design requires, contain the following component parts:

(1) Facepiece, mouthpiece with noseclip, hood, or helmet;

(2) Filter unit;

(3) Harness;

(4) Attached blower; and

(5) Breathing tube.

(b) The components of each non-powered air-purifying particulate respirator shall meet the minimum construction requirements set forth in subpart G of this part.

§ 84.172 Breathing tubes; minimum requirements.

Flexible breathing tubes used in conjunction with respirators shall be designed and constructed to prevent:

(a) Restriction of free head movement;

(b) Disturbance of the fit of facepieces, mouthpieces, hoods, or helmets;

(c) Interference with the wearer's activities; and

(d) Shutoff of airflow due to kinking, or from chin or arm pressure.

§ 84.173 Harnesses; installation and construction; minimum requirements.

(a) Each respirator shall, where necessary, be equipped with a suitable harness designed and constructed to hold the components of the respirator in position against the wearer's body.

(b) Harnesses shall be designed and constructed to permit easy removal and replacement of respirator parts, and, where applicable, provide for holding a full facepiece in the ready position when not in use.

§ 84.174 Respirator containers; minimum requirements.

(a) Except as provided in paragraph (b) of this section each respirator shall be equipped with a substantial, durable container bearing markings which show the applicant's name, the type of respirator it contains, and all appropriate approval labels.

(b) Containers for single-use respirators may provide for storage of more than one respirator, however, such containers shall be designed and constructed to prevent contamination of respirators which are not removed, and to prevent damage to respirators during transit.

§ 84.175 Half-mask facepieces, full facepieces, hoods, helmets, and mouthpieces; fit; minimum requirements.

(a) Half-mask facepieces and full facepieces shall be designed and constructed to fit persons with various facial shapes and sizes either:

(1) By providing more than one facepiece size; or

(2) By providing one facepiece size which will fit varying facial shapes and sizes.

(b) Full facepieces shall provide for optional use of corrective spectacles or lenses, which shall not reduce the respiratory protective qualities of the respirator.

(c) Hoods and helmets shall be designed and constructed to fit persons with various head sizes, provide for the optional use of corrective spectacles or lenses, and insure against any restriction of movement by the wearer.

(d) Mouthpieces shall be equipped with noseclips which are securely attached to the mouthpiece or respirator and provide an airtight seal.

(e) Facepieces, hoods, and helmets shall be designed to prevent eyepiece fogging.

(f) Half-mask facepieces shall not interfere with the fit of common industrial safety corrective spectacles.

§ 84.176 Facepieces, hoods, and helmets; eyepieces; minimum requirements.

Facepieces, hoods, and helmets shall be designed and constructed to provide adequate vision which is not distorted by the eyepieces.

§ 84.177 Inhalation and exhalation valves; minimum requirements.

(a) Inhalation and exhalation valves shall be protected against distortion.

(b) Inhalation valves shall be designed and constructed and provided where necessary to prevent excessive exhaled air from adversely affecting filters, except where filters are specifically designed to resist moisture.

(c) Exhalation valves shall be:

(1) Provided where necessary;

(2) Protected against damage and external influence; and

(3) Designed and constructed to prevent inward leakage of contaminated air.

§ 84.178 Head harnesses; minimum requirements.

(a) All facepieces shall be equipped with head harnesses designed and constructed to provide adequate tension during use and an even distribution of pressure over the entire area in contact with the face.

(b) Facepiece head harnesses, except those employed on single-use respirators, shall be adjustable and replaceable.

(c) Mouthpieces shall be equipped, where applicable, with adjustable and replaceable harnesses, designed and constructed to hold the mouthpiece in place.

§ 84.179 Non-powered air-purifying particulate respirators; filter identification.

(a) The respirator manufacturer, as part of the application for certification, shall specify the filter series and the filter efficiency level (i.e., ''N95'', ''R95, ''P95'', ''N99, ''R99'', ''P99'', ''N100'', ''R100'', or ''P100'') for which certification is being sought.

(b) Filters shall be prominently labeled as follows:

(1) N100 filters shall be labeled ''N100 Particulate Filter (99.97% filter efficiency level)'' and shall be a color other than magenta.

(2) R100 filters shall be labeled ''R100 Particulate Filter (99.97% filter efficiency level)'' and shall be a color other than magenta.

(3) P100 filters shall be labeled ''P100 Particulate Filter (99.97% filter efficiency level)'' and shall be color coded magenta.

(4) N99 filters shall be labeled ''N99 Particulate Filter (99% filter efficiency level)'' and shall be a color other than magenta.

(5) R99 filters shall be labeled ''R99 Particulate Filter (99% filter efficiency level)'' and shall be a color other than magenta.

(6) P99 filters shall be labeled ''P99 Particulate Filter (99% filter efficiency level)'' and shall be a color other than magenta.

(7) N95 filters shall be labeled as ''N95 Particulate Filter (95% filter efficiency level)'' and shall be a color other than magenta.

(8) R95 filters shall be labeled as ''R95 Particulate Filter (95% filter efficiency level)'' and shall be a color other than magenta.

(9) P95 filters shall be labeled as ''P95 Particulate Filter (95% filter efficiency level)'' and shall be a color other than magenta.

§ 84.180 Airflow resistance tests.

(a) Resistance to airflow will be measured in the facepiece, mouthpiece, hood, or helmet of a particulate respirator (complete respirator) mounted on a test fixture with air flowing at continuous rate of 85±2 liters per minute, before each test conducted in accordance with § 84.182.

(b) The resistances for particulate respirators upon initial inhalation shall not exceed 35 mm water column height pressure and upon initial exhalation shall not exceed 25 mm water column height pressure.

§ 84.181 Non-powered air-purifying particulate filter efficiency level determination.

(a) Twenty filters of each non-powered air-purifying particulate respirator model shall be tested for filter efficiency against:

(1) A solid sodium chloride particulate aerosol as per this section, if N-series certification is requested by the applicant.

(2) A dioctyl phthalate or equivalent liquid particulate aerosol as per this section, if R-series or P-series certification is requested by the applicant.

(b) Filters including holders and gaskets; when separable, shall be tested for filter efficiency level, as mounted on a test fixture in the manner as used on the respirator.

(c) Prior to filter efficiency testing of 20 N-series filters, the 20 to be tested shall be taken out of their packaging and placed in an environment of 85±5 percent relative humidity at 38±2.5 °C for 25±1 hours. Following the pre-conditioning, filters shall be sealed in a gas-tight container and tested within 10 hours.

(d) When the filters do not have separable holders and gaskets, the exhalation valves shall be blocked so as to ensure that leakage, if present, is not included in the filter efficiency level evaluation.

(e) For non-powered air-purifying particulate respirators with a single filter, filters shall be tested at a continuous airflow rate of 85±4 liters per minute. Where filters are to be used in pairs, the test-aerosol airflow rate shall be 42.5±2 liters per minute through each filter.

(f) *Filter efficiency test aerosols.* (1) When testing N-series filters, a sodium chloride or equivalent solid aerosol at 25±5 °C and relative humidity of 30±10 percent that has been neutralized to the Boltzmann equilibrium state shall be used. Each filter shall be challenged with a concentration not exceeding 200 mg/m^3.

(2) When testing R-series and P-series filters, a neat cold-nebulized dioctyl phthalate (DOP) or equivalent aerosol at 25±5 °C that has been neutralized to the Boltzmann equilibrium state shall be used. Each filter shall be challenged with a concentration not exceeding 200 mg/m^3.

(3) The test shall continue until minimum efficiency is achieved or until an aerosol mass of at least 200±5 mg has contacted the filter. For P-series filters, if the filter efficiency is decreasing when the 200±5 mg challenge point is reached, the test shall be continued until there is no further decrease in efficiency.

(g) The sodium chloride test aerosol shall have a particle size distribution with count median diameter of 0.075±0.020 micrometer and a standard geometric deviation not exceeding 1.86 at the specified test conditions as determined with a scanning mobility particle sizer or equivalent. The DOP aerosol shall have a particle size distribution with count median diameter of 0.185±0.020 micrometer and a standard geometric deviation not exceeding 1.60 at the specified test conditions as determined with a scanning mobility particle sizer or equivalent.

(h) The efficiency of the filter shall be monitored and recorded throughout the test period by a suitable forward-light-scattering photometer or equivalent instrumentation.

(i) The minimum efficiency for each of the 20 filters shall be determined and recorded and be equal to or greater than the filter efficiency criterion listed for each level as follows:

P100, R100 and N100: Efficiency ≥99.97%
P99, R99 and N99: Efficiency ≥99%
P95, R95 and N95: Efficiency ≥95%

§ 84.182 Exhalation valve leakage test; minimum requirements.

(a) Dry exhalation valves and valve seats will be subjected to a suction of 25 mm. water-column height while in a normal operating position.

(b) Leakage between the valve and valve seat shall not exceed 30 milliliters per minute.

Subpart L—Chemical Cartridge Respirators

§ 84.190 Chemical cartridge respirators: description.

(a) Chemical cartridge respirators including all completely assembled respirators which are designed for use as respiratory protection during entry into or escape from atmospheres not immediately dangerous to life and health, are described according to the specific gases or vapors against which they are designed to provide respiratory protection, as follows:

Type of chemical cartridge respirator [1]	Maximum use concentration, parts per million
Ammonia	300
Chlorine	10
Hydrogen chloride	50
Methyl amine	100
Organic vapor	[2] 1,000
Sulfur dioxide	50
Vinyl chloride	10

[1] Not for use against gases or vapors with poor warning properties (except where MSHA or Occupational Safety and Health Administration standards may permit such use for a specific gas or vapor) or those which generate high heats of reaction with sorbent material in the cartridge.

[2] Maximum use concentrations are lower for organic vapors which produce atmospheres immediately hazardous to life or health at concentrations equal to or lower than this concentration.

(b) Chemical cartridge respirators for respiratory protection against gases or vapors, which are not specifically listed with their maximum use concentration, may be approved if the applicant

submits a request for such approval, in writing, to the Institute. The Institute shall consider each such application and accept or reject the application after a review of the effects on the wearer's health and safety and in the light of any field experience in use of chemical cartridge respirators as protection against such hazards.

§ 84.191 Chemical cartridge respirators; required components.

(a) Each chemical cartridge respirator described in § 84.190 shall, where its design requires, contain the following component parts:

(1) Facepiece, mouthpiece, and noseclip, hood, or helmet;

(2) Cartridge;

(3) Cartridge with filter;

(4) Harness;

(5) Breathing tube; and

(6) Attached blower.

(b) The components of each chemical cartridge respirator shall meet the minimum construction requirements set forth in subpart G of this part.

§ 84.192 Cartridges in parallel; resistance requirements.

Where two or more cartridges are used in parallel, their resistance to airflow shall be essentially equal.

§ 84.193 Cartridges; color and markings; requirements.

The color and markings of all cartridges or labels shall conform with the requirements of the American National Standards Institute, American National Standard for Identification of Air-Purifying Respirator Canisters and Cartridges, ANSI K13.1–1973. ANSI K13.1 is incorporated by reference and has been approved by the Director of the Federal Register in accordance with 5 U.S.C. 552(a) and 1 CFR part 51. Copies may be obtained from American National Standards Institute, Inc., 1430 Broadway, New York, NY 10018. Copies may be inspected at the NIOSH, Certification and Quality Assurance Branch, 1095 Willowdale Road, Morgantown, WV 26505–2888, or at the Office of the Federal Register, 800 North Capitol Street, NW., suite 700, Washington, DC.

§ 84.194 Filters used with chemical cartridges; location; replacement.

(a) Particulate matter filters used in conjunction with a chemical cartridge shall be located on the inlet side of the cartridge.

(b) Filters shall be incorporated in or firmly attached to the cartridge and each filter assembly shall, where applicable, be designed to permit its easy removal from and replacement on the cartridge.

§ 84.195 Breathing tubes; minimum requirements.

Flexible breathing tubes used in conjunction with respirators shall be designed and constructed to prevent:

(a) Restriction of free head movement;

(b) Disturbance of the fit of facepieces, mouthpieces, hoods, or helmets;

(c) Interference with the wearer's activities; and

(d) Shutoff of airflow due to kinking, or from chin or arm pressure.

§ 84.196 Harnesses; installation and construction; minimum requirements.

(a) Each respirator shall, where necessary, be equipped with a suitable harness designed and constructed to hold the components of the respirator in position against the wearer's body.

(b) Harnesses shall be designed and constructed to permit easy removal and replacement of respirator parts and, where applicable, provide for holding a full facepiece in the ready position when not in use.

§ 84.197 Respirator containers; minimum requirements.

Respirators shall be equipped with a substantial, durable container bearing markings which show the applicant's name, the type and commercial designation of the respirator it contains and all appropriate approval labels.

§ 84.198 Half-mask facepieces, full facepieces, mouthpieces, hoods, and helmets; fit; minimum requirements.

(a) Half-mask facepieces and full facepieces shall be designed and constructed to fit persons with various facial shapes and sizes either:

(1) By providing more than one facepiece size; or

(2) By providing one facepiece size which will fit varying facial shapes and sizes.

(b) Hoods and helmets shall be designed and constructed to fit persons with various head sizes, provide for the optional use of corrective spectacles or lenses, and insure against any restriction of movement by the wearer.

(c) Mouthpieces shall be equipped with noseclips which are securely attached to the mouthpiece or respirator and provide an airtight fit.

(d) Full facepieces shall provide for optional use of corrective spectacles or lenses which shall not reduce the respiratory protective qualities of the respirator.

(e) Facepieces, hoods, and helmets shall be designed to prevent eyepiece fogging.

§ 84.199 Facepieces, hoods, and helmets; eyepieces; minimum requirements.

Facepieces, hoods, and helmets shall be designed and constructed to provide adequate vision which is not distorted by the eyepieces.

§ 84.200 Inhalation and exhalation valves; minimum requirements.

(a) Inhalation and exhalation valves shall be provided where necessary and protected against distortion.

(b) Inhalation valves shall be designed and constructed to prevent excessive exhaled air from entering cartridges or adversely affecting canisters.

(c) Exhalation valves shall be—

(1) Protected against damage and external influence; and

(2) Designed and constructed to prevent inward leakage of contaminated air.

§ 84.201 Head harnesses; minimum requirements.

(a)(1) Facepieces for chemical cartridge respirators other than single-use vinyl chloride shall be equipped with adjustable and replaceable head harnesses designed and constructed to provide adequate tension during use and an even distribution of pressure over the entire area in contact with the face.

(2) Facepieces for single-use vinyl chloride respirators shall be equipped with adjustable head harnesses designed and constructed to provide adequate tension during use and an even distribution of pressure over the entire area in contact with the face.

(b) Mouthpieces shall be equipped where applicable, with an adjustable and replaceable harness designed and constructed to hold the mouthpiece in place.

§ 84.202 Air velocity and noise levels; hoods and helmets; minimum requirements.

Noise levels generated by the respirator will be measured inside the hood or helmet at maximum airflow obtainable and shall not exceed 80 dBA.

§ 84.203 Breathing resistance test; minimum requirements.

(a) Resistance to airflow will be measured in the facepiece, mouthpiece, hood, or helmet of a chemical cartridge respirator mounted on a test fixture with air flowing at a continuous rate of 85 liters per minute, both before and after each test conducted in accordance with §§ 84.206 through 84.207.

(b) The maximum allowable resistance requirements for chemical cartridge respirators are as follows:

MAXIMUM RESISTANCE

[Millimeter water column height]

Type of chemical-cartridge respirator	Inhalation		Exhalation
	Initial	Final[1]	
Other than single-use vinyl chloride respirators:			
For gases, vapors, or gases and vapors	40	45	20

MAXIMUM RESISTANCE—Continued

[Millimeter water column height]

Type of chemical-cartridge respirator	Inhalation		Exhalation
	Initial	Final[1]	
For gases, vapors, or gases and vapors, and particulates	50	70	20
Single-use respirator with valves:			
For vinyl chloride	20	25	20
For vinyl chloride and particulates	30	45	2
Single-use respirator without valves:			
For vinyl chloride	15	20	([2])
For vinyl chloride and particulates	25	40	([2])

[1] Measured at end of service life specified in Table 11 of this subpart.
[2] Same as inhalation.

§ 84.204 Exhalation valve leakage test; minimum requirements.

(a) Dry exhalation valves and valve seats will be subjected to a suction of 25 mm. water-column height while in a normal operating position.

(b) Leakage between the valve and valve seat shall not exceed 30 milliliters per minute.

§ 84.205 Facepiece test; minimum requirements.

(a) The complete chemical cartridge respirator will be fitted to the faces of persons having varying facial shapes and sizes.

(b) Where the applicant specifies a facepiece size or sizes for the respirator together with the approximate measurement of faces they are designed to fit, the Institute will provide test subjects to suit such facial measurements.

(c) Any chemical cartridge respirator part which must be removed to perform the facepiece or mouthpiece fit test shall be replaceable without special tools and without disturbing facepiece or mouthpiece fit.

(d) The facepiece or mouthpiece fit test using the positive or negative pressure recommended by the applicant and described in his instructions will be used before each test.

(e)(1) Each wearer will enter a chamber containing 100 p.p.m. isoamyl acetate vapor for half-mask facepieces, and 1,000 p.p.m. for full facepieces, mouthpieces, hoods, and helmets.

(2) The facepiece or mouthpiece may be adjusted, if necessary, in the test chamber before starting the test.

(3) Each wearer will remain in the chamber for 8 minutes while performing the following activities:

(i) Two minutes, nodding and turning head;

(ii) Two minutes, calisthenic arm movements;

(iii) Two minutes, running in place; and

(iv) Two minutes, pumping with a tire pump into a 28-liter (1 cubic-foot) container.

(4) Each wearer shall not detect the odor of isoamyl-acetate vapor during the test.

§ 84.206 Particulate tests; respirators with filters; minimum requirements; general.

(a) Three respirators with cartridges containing, or having attached to them, filters for protection against particulates will be tested in accordance with the provisions of § 84.207.

(b) In addition to the test requirements set forth in paragraph (a) of this section, three such respirators will be tested, as appropriate, in accordance with the provisions of §§ 84.179 through 84.183; however, the maximum allowable resistance of complete particulate, and gas, vapor, or gas and vapor chemical cartridge respirators shall not exceed the maximum allowable limits set forth in § 84.203.

§ 84.207 Bench tests; gas and vapor tests; minimum requirements; general.

(a) Bench tests will be made on an apparatus that allows the test atmosphere at 50±5 percent relative humidity and room temperature, approximately 25 °C, to enter the cartridges continuously at predetermined concentrations and rates of flow, and that has means

for determining the test life of the cartridges.

(b) Where two cartridges are used in parallel on a chemical cartridge respirator, the bench test will be performed with the cartridges arranged in parallel, and the test requirements will apply to the combination rather than to the individual cartridges.

(c) Three cartridges or pairs of cartridges will be removed from containers and tested as received from the applicant.

(d) Two air purifying cartridges or pairs of cartridges will be equilibrated at room temperature by passing 25 percent relative humidity air through them at the flow rate of 25 liters per minute (l.p.m.) for 6 hours.

(e) Two air purifying cartridges or pairs of cartridges will be equilibrated by passing 85 percent relative humidity air through them at the flow rate of 25 l.p.m.

(f) All cartridges will be resealed, kept in an upright position, at room temperatures, and tested within 18 hours.

(g) Cartridges will be tested and shall meet the minimum requirements set forth in Table 11 of this subpart.

TABLES TO SUBPART L OF PART 84

TABLES 9 AND 10 [RESERVED]

TABLE 11–CARTRIDGE BENCH TESTS AND REQUIREMENTS

[42 CFR part 84, subpart L]

Cartridge	Test condition	Test atmosphere		Flowrate (l.p.m.)	Number of tests	Penetration [1] (p.p.m.)	Minimum life [2] (min.)
		Gas or vapor	Concentration (p.p.m.)				
Ammonia	As received	NH_3	1000	64	3	50	50
Ammonia	Equilibrated	NH_3	1000	32	4	50	50
Chlorine	As received	Cl_2	500	64	3	5	35
Chlorine	Equilibrated	Cl_2	500	32	4	5	35
Hydrogen chloride.	As received	HCl	500	64	3	5	50
Hydrogen chloride.	Equilibrated	HCl	500	32	4	5	50
Methylamine	As received	CH_3 NH_2	1000	64	3	10	25
Methylamine	Equilibrated	CH_3 NH_2	1000	32	4	10	25
Organic vapors	As received	CCl_4	1000	64	3	5	50
Organic vapors	Equilibrated	CCl_4	1000	32	4	5	50
Sulfur dioxide	As received	SO_2	500	64	3	5	30
Sulfur dioxide	Equilibrated	SO_2	500	32	4	5	30

[1] Minimum life will be determined at the indicated penetration.

[2] Where a respirator is designed for respiratory protection against more than one type of gas or vapor, as for use in ammonia and in chlorine, the minimum life shall be one-half that shown for each type of gas or vapor. Where a respirator is designed for respiratory protection against more than one gas of a type, as for use in chlorine and sulfur dioxide, the stated minimal life shall apply.

Subpart M [Reserved]

Subpart N—Special Use Respirators

§ 84.250 Vinyl chloride respirators; description.

Vinyl chloride respirators, including all completely assembled respirators which are designed for use as respiratory protection during entry into and escape from vinyl chloride atmospheres containing adequate oxygen to support life, are described according to their construction as follows:

(a) Front-mounted or back-mounted gas masks;

(b) Chin-style gas masks;

(c) Chemical-cartridge respirators;

(d) Powered air-purifying respirators; and

(e) Other devices, including combination respirators.

§ 84.251 Required components.

(a) Each vinyl chloride respirator described in § 84.250 shall, where its design requires, contain the following component parts:

(1) Facepiece;

(2) Canister with end-of-service-life indicator;

(3) Cartridge with end-of-service-life indicator;

(4) Harness;

(5) Attached blower; and

(6) Breathing tube.

(b) The components of each vinyl chloride respirator shall meet the minimum construction requirements set forth in Subpart G of this part.

§ 84.252 Gas masks; requirements and tests.

(a) Except for the tests prescribed in § 84.126, the minimum requirements and performance tests for gas masks, prescribed in Subpart I of this part, are applicable to vinyl chloride gas masks.

(b) The following bench tests are applicable to canisters designed for use with gas masks for entry into and escape from vinyl chloride atmospheres containing adequate oxygen to support life:

(1) Four canisters will be equilibrated at 25±5 °C by passing 85±5 percent relative humidity air through them at 64 liters per minute for six hours.

(2) The equilibrated canisters will be resealed, kept in an upright position at room temperature, and tested according to paragraph (b)(3) of this section within 18 hours.

(3) The canisters equilibrated and stored as described in paragraphs (b) (1) and (2) of this section will be tested on an apparatus that allows the test atmosphere at 85±5 percent relative humidity and 25±5 °C to enter the canister continuously at a concentration of 25 ppm vinyl chloride monomer at a total flow rate of 64 liters per minute.

(4) The maximum allowable penetration after six hours of testing according to paragraph (b)(3) of this section shall not exceed 1 ppm vinyl chloride.

(c) Where canisters are submitted for testing and approval with a service life of more than four hours, the period of time for testing for vinyl chloride penetration will be performed at 150% of the service life specified in the manufacturer's application. (Example: If a manufacturer requests approval of a respirator for six hours use against exposure to vinyl chloride, the maximum allowable penetration after nine hours of testing shall not exceed 1 ppm vinyl chloride.)

§ 84.253 Chemical-cartridge respirators; requirements and tests.

(a) Except for the tests prescribed in §§ 84.206 and 84.207, the minimum requirements and performance tests for chemical-cartridge respirators prescribed in Subpart L of this part are applicable to replaceable-cartridge and single-use vinyl chloride chemical-cartridge respirators.

(b) The following bench tests are applicable to cartridges designed for use with chemical-cartridge respirators for entry into and escape from vinyl chloride atmospheres containing adequate oxygen to support life:

(1) Where two cartridges are used in parallel on a chemical-cartridge respirator, the bench test requirements will apply to the combination rather than the individual cartridges.

(2) Four cartridges or pairs of cartridges will be equilibrated at 25±5 °C by passing 85±5 percent relative humidity air through them at 25 liters per minute for six hours.

(3) The equilibrated cartridges will be resealed, kept in an upright position, at room temperature, and tested according to paragraphs (b)(4) and (b)(5) of this section for other than single-use respirators or according to paragraphs (b)(6) and (b)(7) of this section for single-use respirators within 18 hours.

(4) The cartridges or pairs of cartridges for other than single-use respirators, equilibrated and stored as described in paragraphs (b)(1), (b)(2), and (b)(3) of this section, will be tested on an apparatus that allows the test atmosphere at 85±5 percent relative humidity and 25±5 °C, to enter the cartridges or pairs of cartridges continuously at a concentration of 10 ppm vinyl chloride monomer at a total flowrate of 64 liters per minute.

(5) The maximum allowable penetration after 90 minutes testing of cartridges or pairs of cartridges for other than single-use respirators, according

to paragraph (b)(4) of this section shall not exceed 1 ppm vinyl chloride.

(6) The single-use respirators, equilibrated and stored as described in paragraphs (b)(2) and (b)(3) of this section, will be tested on an apparatus that allows a test atmosphere at 85±5 percent relative humidity and 25±5 °C to be cycled through the respirator by a breathing machine at a concentration of 10 ppm vinyl chloride monomer at the rate of 24 respirations per minute at a minute volume of 40±0.6 liters. Air exhaled through the respirator will be 35±2 °C with 94±3 percent relative humidity.

(7) The maximum allowable penetration after 144 minutes testing of respirators, according to paragraph (b)(6) of this section, shall not exceed 1 ppm vinyl chloride.

§ 84.254 Powered air-purifying respirators; requirements and tests.

(a) Except for the tests prescribed in § 84.207, the minimum requirements and performance tests for powered air-purifying respirators prescribed in subpart L of this part are applicable to vinyl chloride powered air-purifying respirators.

(b) The following bench tests are applicable to cartridges designed for use with powered air-purifying respirators for entry into and escape from vinyl chloride atmospheres containing adequate oxygen to support life:

(1) Four cartridges will be equilibrated at 25± °C by passing 85±5 percent relative humidity air through them at 115 liters per minute for tight-fitting facepieces and 170 liters per minute for loose-fitting hoods and helmets, for six hours.

(2) The equilibrated cartridges will be resealed, kept in an upright position at room temperature and tested according to paragraph (b)(3) of this section within 18 hours.

(3) The cartridges equilibrated and stored as described in paragraphs (b) (1) and (2) of this section will be tested on an apparatus that allows the test atmosphere at 85±5 percent relative humidity and 25±5 °C to enter the cartridge continuously at a concentration of 25 ppm vinyl chloride monomer at a total flow rate of 115 liters per minute for tight-fitting facepieces and 170 liters per minute for loose-fitting hoods and helmets.

(4) The maximum allowable penetration after six hours of testing according to paragraph (b)(3) of this section shall not exceed 1 ppm vinyl chloride.

§ 84.255 Requirements for end-of-service-life indicator.

(a) Each canister or cartridge submitted for testing and approval in accordance with §§ 84.252, 84.253, and 84.254 shall be equipped with a canister or cartridge end-of-service-life indicator which shows a satisfactory indicator change or other obvious warning before 1 ppm vinyl chloride penetration occurs. The indicator shall show such change or afford such warning at 80±10 percent of the total service life to 1 ppm leakage, as determined by continuing each test described in §§ 84.252(b), 84.253(b), and 84.254(b) until a 1 ppm leakage of vinyl chloride occurs.

(b) The applicant shall provide sufficient pretest data to verify the performance of the end-of-service-life indicator required in paragraph (a) of this section.

§ 84.256 Quality control requirements.

(a) In addition to the construction and performance requirements specified in §§ 84.251, 84.252, 84.253, 84.254, and 84.255, the quality control requirements in paragraphs (b), (c), and (d) of this section apply to approval of gas masks, chemical cartridge respirators, and powered air-purifying respirators for entry into and escape from vinyl chloride atmospheres containing adequate oxygen to support life.

(b) The respirators submitted for approval as described in paragraph (a) of this section shall be accompanied by a complete quality control plan meeting the requirements of subpart E of this part.

(c)(1) The applicant shall specify in the plan that a sufficient number of samples will be drawn from each bulk container of sorbent material and that where activated carbon is used, the following specific tests will be performed:

(i) Apparent density;

(ii) Iodine number;

(iii) Moisture content;

(iv) Carbon tetrachloride number; and

(v) Mesh size.

(2) The tests in paragraph (c)(1) of this section shall be performed in a quantity necessary to assure continued satisfactory conformance of the canisters and cartridges to the requirements of this subpart.

(d) Final performance quality control tests on the complete canisters and cartridges shall be accomplished using the bench tests and procedures prescribed in §§ 84.252, 84.253, 84.254, and 84.255.

§ 84.257 Labeling requirements.

(a) A warning shall be placed on the label of each gas mask, chemical-cartridge respirator, and powered air-purifying respirator, and on the label of each canister and cartridge, alerting the wearer to the need for a fitting test in accordance with the manufacturer's facepiece fitting instructions, providing service life information, providing specific instructions for disposal, and advising that the wearer may communicate to NIOSH any difficulties that may be experienced in the design and performance of any gas mask, chemical-cartridge respirator, or powered air-purifying respirator approved under the requirements of this subpart. The service lives of respirators meeting the test requirements of this subpart shall be specified as follows:

Chemical-cartridge respirator	1 hour.
Gas mask	4 hours.
Powered air-purifying respirator	4 hours.

(b) Where the service life of a respirator is approved for more than four hours, the service life for which the respirator has been approved will be specified.

§ 84.258 Fees.

The following fees shall be charged for the examination, inspection, and testing of complete assemblies and components of respirators described in §§ 84.250 and 84.251:

Complete gas mask	$1,100
Complete chemical-cartridge respirator	1,150
Complete powered air-purifying respirator	1,500
Canister or cartridge only	750

Subparts O–JJ [Reserved]

Subpart KK—Dust, Fume, and Mist; Pesticide; Paint Spray; Powered Air-Purifying High Efficiency Respirators and Combination Gas Masks

§ 84.1100 Scope and effective dates.

The purpose of this subpart KK is to establish procedures and requirements for issuing extensions of approval of particulate respirators certified prior to July 10, 1995 under the provisions of 30 CFR part 11 (See 30 CFR part 11 edition, as revised July 1, 1994.), new approvals and extensions of approval of particulate respirators for applications that are in NIOSH receipt on July 10, 1995, and approval of powered air-purifying respirators.

(a) Air-purifying respirators with particulate filters approved under the provisions of this subpart after July 10, 1995 will have a 30 CFR part 11 approval label.

(b) Only changes or modifications of non-powered air-purifying respirators with particulate filters approved under the provisions of subparts I, K, L, or M of 30 CFR part 11 or paragraph (a) of this section and deemed necessary by NIOSH to ensure the health and safety of the wearer will be approved until July 10, 1998 and will have a 30 CFR part 11 approval label.

(c) Only changes or modifications of powered air-purifying respirators with particulate filters approved under the provisions of subparts I, K, L, or M of 30 CFR part 11 or paragraph (a) of this section and deemed necessary by NIOSH to ensure the health and safety of the wearer will be approved under this subpart until July 10, 1998 and will have a 30 CFR part 11 label.

(d) Approval of powered air-purifying respirators will be issued under this subpart. Particulate filters for powered air-purifying respirators approved under the provisions of this subpart shall be only high-efficiency (HEPA) as described in § 84.1130(a)(4) and will carry a 42 CFR part 84 approval label. In addition, changes or modifications of powered HEPA air-purifying respirators approved under the provisions of this subpart KK will be approved

under this subpart and will have a 42 CFR part 84 approval label.

§ 84.1101 Definitions.

As used in this subpart

(a) *Air Contamination Level* means the standards of contaminant levels prescribed by the Secretary of Labor in accordance with the provisions of the Occupational Safety and Health Act of 1970 (Pub. L. 91–596; 84 Stat. 1590).

(b) *DOP* means a homogenous liquid aerosol, having a particle diameter of 0.3 micrometer, which is generated by vaporization and condensation of dioctyl phthalate.

(c) *Pesticide* means:

(1) Any substance or mixture of substances (including solvents and impurities) intended to prevent, destroy, repel, or mitigate any insect, rodent, nematode, fungus, weed, or other form of plant or animal life or virus; and

(2) Any substance or mixture of substances (including solvents and impurities) intended for use as a plant regulator, defoliant, or desiccant, as defined in the Federal Insecticide, Fungicide, and Rodenticide Act of 1947, as amended (7 U.S.C. 135–135k), excluding fumigants which are applied as gases or vapors or in a solid or liquid form as pellets or poured liquids for subsequent release as gases or vapors.

(d) *Radionuclide* means an atom identified by the constitution of its nucleus (specified by the number of protons Z, number of neutrons N, and energy, or, alternatively, by the atomic number Z, mass number A=(N+Z), and atomic mass) which exists for a measurable time; decays or disintegrates spontaneously, emits radiation, and results in the formation of new nuclides.

(e) *Smoke* means the products of incomplete combustion of organic substances in the form of solid and liquid particles and gaseous products in air, usually of sufficient concentration to perceptibility obscure vision.

§ 84.1102 Examination, inspection and testing of complete respirator assemblies; fees.

The following fees shall be charged by the Institute for the examination, inspection and testing of complete respirator assemblies approved under this subpart:

(a) Gas masks with particulate filter, including pesticide gas masks—

(1) Single hazard—$1,100.

(2) Type N—$4,100.

(b) Dust, fume and mist respirators—

(1) Single particulate hazard having an Air Contamination Level more than 0.05 mg./m.^{3} or 2 million particles per cubic foot—$500.

(2) Combination particulate hazards having an Air Contamination Level more than 0.05 mg./m.^{3} or 2 million particles per cubic foot—$750.

(3) Particulate hazards having an Air Contamination Level less than 0.05 mg./m.^{3} or 2 million particles per cubic foot, radon daughters —$1,250.

(4) All dusts, fumes and mists—$2,000.

(c) Paint spray respirators—$1,600.

(d) Pesticide respirators—$1,600.

(e) Chemical cartridge respirators with particulate filter—$1,150.

§ 84.1103 Approval labels and markings; approval of contents; use.

(a) Full-scale reproductions of approval labels and markings, and a sketch or description of the method of application and position on the harness, container, canister, cartridge, filter, or other component, together with instructions for the use and maintenance of the respirator shall be submitted to MSHA and the Institute for approval.

(b) Approval labels for non-powered and powered air-purifying dust, fume, mist respirators approved prior to July 10, 1995 under the provisions of subpart K of 30 CFR part 11 (See 30 CFR Part 11 edition, revised as of July 1, 1994.) shall bear the emblem of the Mine Safety and Health Administration and the seal of the Department of Health and Human Services, the applicant's name and address, an approval number assigned by the Institute, a statement that the respirator was tested and approved under subpart K of 30 CFR part 11 and, where appropriate, restrictions or limitations placed upon the use of the respirator by the Institute. The approval number assigned by the Institute shall be designated by the prefix TC and a serial number.

(c) Approval labels for powered air-purifying respirators approved under the provisions of this subpart shall

bear the emblem of the National Institute for Occupational Safety and Health and the seal of the Department of Health and Human Services, the applicant's name and address, an approval number assigned by the Institute, a statement stating the respirator was tested under the provisions of this subpart, and, where appropriate, restrictions or limitations placed upon the use of the respirator by the Institute. The approval number assigned by the Institute shall be designated by the prefix TC and a serial number.

(c) The Institute shall, where necessary, notify the applicant when additional labels, markings, or instructions will be required.

(d) Approval labels and markings shall only be used by the applicant to whom they were issued.

(e) Legible reproductions or abbreviated forms of the label approved by the Institute for use on each respirator shall be attached to or printed at the following locations:

Respirator type	Label type	Location
Gas mask with a particulate filter, including pesticide gas mask.	Entire	Mask and container.
Dust, fume, and mist respirators	Entire	Respirator container and filter container.
	Abbreviated	Filters.
Chemical-cartridge respirator with a particulate filter, including paint spray respirator.	Entire	Respirator container, cartridge container, and filter containers (where applicable).
	Abbreviated	Cartridges and filters and filter containers.
Pesticide respirator	Entire	Respirator container, and cartridge and filter containers.
	Abbreviated	Cartridges and filters.

(f) The use of any MSHA and Institute approval label obligates the applicant to whom it is issued to maintain or cause to be maintained the approved quality control sampling schedule and the acceptable quality level for each characteristic tested, and to assure that it is manufactured according to the drawings and specifications upon which the certificate of approval is based.

(g) Each respirator, respirator component, and respirator container shall, as required by the Institute to assure quality control and proper use of the respirator, be labeled distinctly to show the name of the applicant, and the name and letters or numbers by which the respirator or respirator component is designated for trade purposes, and the lot number, serial number, or approximate date of manufacture.

EDITORIAL NOTE: At 60 FR 30388, June 8, 1995, § 84.1103 was added with two paragraph (c) designations.

§ 84.1130 Respirators; description.

(a) Dust, fume, and mist respirators, including all completely assembled respirators designed for use as respiratory protection during entry into and escape from atmospheres which contain adequate oxygen to support life and hazardous particulates, are described as follows:

(1) Air-purifying respirators, either with replaceable or reusable filters, designed as respiratory protection against dusts:

(i) Having an air contamination level not less than 0.05 milligram per cubic meter of air, including but not limited to coal, arsenic, cadmium, chromium, lead, and manganese; or

(ii) Having an air contamination level not less than 2 million particles per cubic foot of air, including but not limited to aluminum, flour, iron ore, and free silica, resulting principally from the disintegration of a solid, e.g., dust clouds produced in mining, quarrying, and tunneling, and in dusts produced during industrial operations, such as grinding, crushing, and the general processing of minerals and other materials.

(2) Air-purifying respirators, with replaceable filters, designed as respiratory protection against fumes of various metals having an air contamination level not less than 0.05 milligram per cubic meter, including but not limited to aluminum, antimony, arsenic, cadmium, chromium, copper,

iron, lead, magnesium, manganese, mercury (except mercury vapor), and zinc, which result from the sublimation or condensation of their respective vapors, or from the chemical reaction between their respective vapors and gases.

(3) Air-purifying respirators, with replaceable filters, designed as respiratory protection against mists of materials having an air contamination level not less than 0.05 milligram per cubic meter or 2 million particles per cubic foot, e.g., mists produced by spray coating with vitreous enamels, chromic acid mist produced during chromium plating, and other mists of materials whose liquid vehicle does not produce harmful gases or vapors.

(4) Air-purifying respirators, with replaceable filters, designed as respiratory protection against dusts, fumes, and mists having an air contamination level less than 0.05 milligram per cubic meter, including but not limited to lithium hydride and beryllium, and against radionuclides.

(5) Air-purifying respirators, with replaceable filters, designed as respiratory protection against radon daughters, and radon daughters attached to dusts, fumes, and mists.

(6) Air-purifying respirators, with replaceable filters, designed as respiratory protection against asbestos-containing dusts and mists.

(7) Air-purifying respirators, with replaceable filters, designed as protection against various combinations of particulate matter.

(8) Air-purifying dust respirators designed as respiratory protection against pneumoconiosis- and fibrosis-producing dusts, or dusts and mists, including but not limited to aluminum, asbestos, coal, flour, iron ore, and free silica.

(b) Gas masks containing filters for protection against dusts, fumes, mists, and smokes in combination with gases, vapors, or gases and vapors. These respirators are not for use against gases or vapors with poor warning properties (except where MSHA or Occupational Safety and Health Administration standards may permit such use for a specific gas or vapor) or those which generate high heats of reaction with sorbent material in the canister.

(c) Pesticide respirators, including all completely assembled respirators which are designed for use as respiratory protection during entry into and escape from atmospheres which contain pesticide hazards, are described according to their construction as follows:

(1) Front-mounted or back-mounted gas masks;

(2) Chin-style gas mask;

(3) Chemical cartridge;

(4) Air-purifying respirator with attached blower; and,

(5) Other devices, including combination respirators.

(d) Respirators with cartridges containing or having attached to them, filters for protection against mists of paints, lacquers, and enamels. These respirators are not for use against gases or vapors with poor warning properties (except where MSHA or Occupational Safety and Health Administration standards may permit such use for a specific gas or vapor) or those which generate high heats of reaction with sorbent material in the cartridge.

(e) Respirators with cartridges containing or having attached to them filters for protection against dusts, fumes, and mists, except the mists of paints, lacquers, and enamels. These respirators are not for use against gases or vapors with poor warning properties (except where MSHA or Occupational Safety and Health Administration standards may permit such use for a specific gas or vapor) or those which generate high heats of reaction with sorbent material in the cartridge.

§ 84.1131 Respirators; required components.

(a) Each respirator described in § 84.1130 shall, where its design requires, contain the following component parts:

(1) Facepiece, mouthpiece with noseclip, hood, or helmet;

(2) Filter unit, canister with filter, or cartridge with filter;

(3) Harness;

(4) Attached blower; and

(5) Breathing tube.

(b) The components of each respirator shall meet the minimum construction requirements set forth in Subpart G of this part.

§ 84.1132 Breathing tubes; minimum requirements.

(a) Flexible breathing tubes used in conjunction with respirators shall be designed and constructed to prevent:

(1) Restriction of free head movement;

(2) Disturbance of the fit of facepieces, mouthpieces, hoods, or helmets;

(3) Interference with the wearer's activities; and

(4) Shutoff of airflow due to kinking, or from chin or arm pressure.

§ 84.1133 Harnesses; installation and construction; minimum requirements.

(a) Each respirator shall, where necessary, be equipped with a suitable harness designed and constructed to hold the components of the respirator in position against the wearer's body.

(b) Harnesses shall be designed and constructed to permit easy removal and replacement of respirator parts, and, where applicable, provide for holding a full facepiece in the ready position when not in use.

§ 84.1134 Respirator containers; minimum requirements.

(a) Except as provided in paragraph (b) of this section each respirator shall be equipped with a substantial, durable container bearing markings which show the applicant's name, the type of respirator it contains, and all appropriate approval labels. Except for dust, fume, and mist respirators, the commercial designation of the respirator it contains shall be shown.

(b) Containers for single-use respirators may provide for storage of more than one respirator, however, such containers shall be designed and constructed to prevent contamination of respirators which are not removed, and to prevent damage to respirators during transit.

(c) Containers for gas masks combinations shall be designed and constructed to permit easy removal of the mask.

§ 84.1135 Half-mask facepieces, full facepieces, hoods, helmets, and mouthpieces; fit; minimum requirements.

(a) Half-mask facepieces and full facepieces shall be designed and constructed to fit persons with various facial shapes and sizes either:

(1) By providing more than one facepiece size; or

(2) By providing one facepiece size which will fit varying facial shapes and sizes.

(b) Full facepieces shall provide for optional use of corrective spectacles or lenses, which shall not reduce the respiratory protective qualities of the respirator.

(c) Hoods and helmets shall be designed and constructed to fit persons with various head sizes, provide for the optional use of corrective spectacles or lenses, and insure against any restriction of movement by the wearer.

(d) Mouthpieces shall be equipped with noseclips which are securely attached to the mouthpiece or respirator and provide an airtight seal.

(e) Facepieces, hoods, and helmets shall be designed to prevent eyepiece fogging.

(f) Half-mask facepieces shall not interfere with the fit of common industrial safety corrective spectacles, as determined by the Institute's facepiece tests in §§ 84.1141, 84.1142, and 84.1156(b).

§ 84.1136 Facepieces, hoods, and helmets; eyepieces; minimum requirements.

(a) Facepieces, hoods, and helmets shall be designed and constructed to provide adequate vision which is not distorted by the eyepieces.

(b) All eyepieces of gas masks combinations shall be designed and constructed to be impact and penetration resistant. Federal Specification, Mask, Air Line: and Respirator, Air Filtering, Industrial, GGG–M–125d, October 11, 1965, with interim amendment-1, July 30, 1969, is an example of an appropriate standard for determining impact and penetration resistance. Copies of GGG–M–125d may be obtained from the

NIOSH, Certification and Quality Assurance Branch, 1095 Willowdale Road, Morgantown, WV 26505–2888.

§ 84.1137 Inhalation and exhalation valves; minimum requirements.

(a) Inhalation and exhalation valves shall be protected against distortion.

(b) Inhalation valves shall be designed and constructed and provided where necessary to prevent excessive exhaled air from adversely affecting filters, cartridges, and canisters, except where filters of dust, fume, and mist respirators are specifically designed to resist moisture as prescribed in § 84.1145.

(c) Exhalation valves shall be:

(1) Provided where necessary;

(2) Protected against damage and external influence; and

(3) Designed and constructed to prevent inward leakage of contaminated air.

§ 84.1138 Head harnesses; minimum requirements.

(a) All facepieces shall be equipped with head harnesses designed and constructed to provide adequate tension during use and an even distribution of pressure over the entire area in contact with the face.

(b) Facepiece head harnesses, except those employed on single-use dust, fume, and mist respirators, shall be adjustable and replaceable.

(c) Mouthpieces shall be equipped, where applicable, with adjustable and replaceable harnesses, designed and constructed to hold the mouthpiece in place.

§ 84.1139 Air velocity and noise levels; hoods and helmets; minimum requirements.

Noise levels generated by the respirator will be measured inside the hood or helmet at maximum airflow obtainable and shall not exceed 80 dBA.

§ 84.1140 Dust, fume, and mist respirators; performance requirements; general.

Dust, fume, and mist respirators and the individual components of each such device shall, as appropriate, meet the requirements for performance and protection specified in the tests described in §§ 84.1141 through 84.1152 and prescribed in Tables 12 and 13.

§ 84.1141 Isoamyl acetate tightness test; dust, fume, and mist respirators designed for respiratory protection against fumes of various metals having an air contamination level not less than 0.05 milligram per cubic meter; minimum requirements.

(a) The respirator will be modified in such a manner that all of the air that normally would be inhaled through the inhalation port(s) is drawn through an efficient activated charcoal-filled canister, or cartridge(s), without interference with the face-contacting portion of the facepiece.

(b) The modified respirator will be worn by persons for at least 2 minutes each in a test chamber containing 100 parts (by volume) of isoamyl-acetate vapor per million parts of air.

(c) The odor of isoamyl-acetate shall not be detected by the wearers of the modified respirator while in the test atmosphere.

§ 84.1142 Isoamyl acetate tightness test; respirators designed for respiratory protection against dusts, fumes, and mists having an air contamination level less than 0.05 milligram per cubic meter, or against radionuclides; minimum requirements.

(a) The applicant shall provide a charcoal-filled canister or cartridge of a size and resistance similar to the filter unit with connectors which can be attached to the facepiece in the same manner as the filter unit.

(b)(1) The canister or cartridge will be used in place of the filter unit, and persons will each wear a modified half-mask facepiece for 5 minutes in a test chamber containing 100 parts (by volume) of isoamyl-acetate vapor per million parts of air.

(2) The following work schedule will be performed by each wearer in the test chamber:

(i) Two minutes walking, nodding, and shaking head in normal movements; and

(ii) Three minutes exercising and running in place.

(3) The facepiece shall be capable of adjustment, according to the applicant's instructions, to each wearer's

face, and the odor of isoamyl-acetate shall not be detectable by any wearer during the test.

(c) Where the respirator is equipped with a full facepiece, hood, helmet, or mouthpiece, the canister or cartridge will be used in place of the filter unit, and persons will each wear the modified respiratory-inlet covering for 5 minutes in a test chamber containing 1,000 parts (by volume) of isoamyl-acetate vapor per million parts of air, performing the work schedule specified in paragraph (b)(2) of this section.

§ 84.1143 Dust, fume, and mist air-purifying filter tests; performance requirements; general.

Dust, fume, and mist respirators will be tested in accordance with the schedule set forth in Table 13 of this subpart to determine their effectiveness as protection against the particulate hazards specified in Table 13.

§ 84.1144 Silica dust test for dust, fume, and mist respirators; single-use or reusable filters; minimum requirements.

(a) Three non-powered respirators with single-use filters will be tested for periods of 90 minutes each at a continuous airflow rate of 32 liters per minute.

(b) The relative humidity in the test chamber will be 20–80 percent, and the room temperature approximately 25° C.

(c) The test suspension in the chamber will not be less than 50 nor more than 60 milligrams of flint (99+ percent free silica) per cubic meter of air.

(d) The flint in suspension will be ground to pass 99+ percent through a 270-mesh sieve.

(e) The particle-size distribution of the test suspension will have a geometric mean of 0.4 to 0.6 micrometer, and the standard geometric deviation will not exceed 2.

(f) The total amount of unretained test suspension in samples taken during testing shall not exceed 1.5 milligrams for a non-powered air-purifying respirator.

(g) Three non-powered respirators with reusable filters will be tested and shall meet the requirements specified in paragraphs (a) through (f) of this section; each filter shall be tested three times: Once as received; once after cleaning; and once after recleaning. The applicant's instructions shall be followed for each cleaning.

§ 84.1145 Silica dust test; non-powered single-use dust respirators; minimum requirements.

(a) Three respirators will be tested.

(b) As described in § 84.1144, airflow will be cycled through the respirator by a breathing machine at the rate of 24 respirations per minute with a minute volume of 40 liters; a breathing machine cam with a work rate of 622 kg.-m.2/minute shall be used.

(c) Air exhaled through the respirator will be 35° ±2° C. with 94 ±3 percent relative humidity. #

(d) Air inhaled through the respirator will be sampled and analyzed for respirator leakage.

(e) The total amount of unretained test suspension, after drying, in samples taken during testing, shall not exceed 1.8 milligrams for any single test.

§ 84.1146 Lead fume test for dust, fume, and mist respirators; minimum requirements.

(a) Three non-powered respirators will be tested for a period of 312 minutes each at a continuous airflow rate of 32 liters per minute.

(b) The relative humidity in the test chamber will be 20–80 percent, and the room temperature approximately 25° C.

(c) The test suspension in the test chamber will not be less than 15 nor more than 20 milligrams of freshly generated lead-oxide fume, calculated as lead (Pb), per cubic meter of air.

(d) The fume will be generated by impinging an oxygen-gas flame on molten lead.

(e) Samples of the test suspension will be taken during each test period for analysis.

(f) The total amount of unretained test suspension in the samples taken during testing, which is analyzed and calculated as lead (Pb), shall not exceed 1.5 milligrams of lead for a non-powered air-purifying respirator.

§ 84.1147 Silica mist test for dust, fume, and mist respirators; minimum requirements.

(a) Three non-powered respirators will be tested for a period of 312 minutes each at a continuous airflow rate of 32 liters per minute.

(b) The room temperature in the test chamber will be approximately 25°C.

(c) The test suspension in the test chamber will not be less than 20 nor more than 25 milligrams of silica mist, weighed as silica dust, per cubic meter of air.

(d) Mist will be produced by spraying an aqueous suspension of flint (99+ percent free silica), and the flint shall be ground to pass 99+ percent through a 270-mesh sieve.

(e) Samples of the test suspension will be taken during each test period for analysis.

(f) The total amount of silica mist unretained in the samples taken during testing, weighed as silica dust, shall not exceed 2.5 milligrams for a non-powered air-purifying respirator.

§ 84.1148 Tests for respirators designed for respiratory protection against more than one type of dispersoid; minimum requirements.

Respirators designed as respiratory protection against more than one particulate hazard (dust, fume, or mist) shall comply with all the requirements of this part, with respect to each of the specific hazards involved.

§ 84.1149 Airflow resistance tests; all dust, fume, and mist respirators; minimum requirements.

(a) Resistance to airflow will be measured in the facepiece, mouthpiece, hood, or helmet of a dust, fume, or mist respirator mounted on a test fixture with air flowing at a continuous rate of 85 liters per minute, both before and after each test conducted in accordance with §§ 84.1144 through 84.1147.

(b) The maximum allowable resistance requirements for dust, fume, and mist respirators are as follows:

MAXIMUM RESISTANCE

[mm. water-column height]

Type of respirator	Initial inhalation	Final inhalation	Exhalation
Pneumoconiosis- and fibrosis-producing dusts, or dusts and mists	12	15	15
Dust, fume, and mist, with single-use filter	30	50	20
Dust, fume, and mist, with reusable filter	20	40	20
Radon daughter	18	[1] 25	15
Asbestos dust and mist	18	25	15

[1] Measured after silica dust test described in § 84.1144.

§ 84.1150 Exhalation valve leakage test; minimum requirements.

(a) Dry exhalation valves and valve seats will be subjected to a suction of 25 mm. water-column height while in a normal operating position.

(b) Leakage between the valve and valve seat shall not exceed 30 milliliters per minute.

§ 84.1151 DOP filter test; respirators designed as respiratory protection against dusts, fumes, and mists having an air contamination level less than 0.05 milligram per cubic meter and against radionuclides; minimum requirements.

(a) All single air-purifying respirator filter units will be tested in an atmosphere concentration of 100 micrograms of DOP per liter of air at continuous flow rates of 32 and 85 liters per minute for a period of 5 to 10 seconds.

(b) Where filters are to be used in pairs, the flow rates will be 16 and 42.5 liters per minute, respectively, through each filter.

(c) The filter will be mounted on a connector in the same manner as used on the respirator, and the total leakage for the connector and filter shall not exceed 0.03 percent of the ambient DOP concentration at either flow rate.

§ 84.1152 Silica dust loading test; respirators designed as protection against dusts, fumes, and mists having an air contamination level less than 0.05 milligram per cubic meter and against radionuclides; minimum requirements.

(a) Three non-powered respirators will be tested in accordance with the provisions of § 84.1144, or equivalent, and shall meet the minimum requirements of §§ 84.1144 and 84.1149.

(b) Three powered air-purifying respirators will be tested in accordance with the provisions of § 84.1144 except they will be tested for a period of 4 hours each at a flowrate not less than 115 liters per minute to tight-fitting facepieces, and not less than 170 liters per minute to loose-fitting hoods and helmets. The total amount of unretained test suspension in samples taken during testing shall not exceed 14.4 milligrams for a powered air-purifying respirator with tight-fitting facepiece, and 21.3 milligrams for a powered air-purifying respirator with loose-fitting hood or helmet. They shall meet the minimum requirements of § 84.1149.

§ 84.1153 Dust, fume, mist, and smoke tests; canister bench tests; gas masks canisters containing filters; minimum requirements.

(a) Gas mask canisters containing filters for protection against dusts, fumes, mists, and smokes in combination with gases, vapors, or gases and vapors, will be tested as prescribed in § 84.1140 except for the breathing resistance which will be in accordance with § 84.122.

(b) Gas mask canisters designed for protection against smokes will be tested in an atmospheric concentration of 100 micrograms of dioctyl phthalate per liter of air at continuous flow rates of 32 liters per minute and 85 liters per minute for a period of 5 to 10 seconds, and the DOP leakage through the canister shall not exceed 0.03 percent of the test concentration.

(c) Gas mask canisters containing filters for protection against dusts, fumes, mists, and smokes in combination with gases, vapors, or gases and vapors, will be tested as prescribed in § 84.126.

§ 84.1154 Canister and cartridge requirements.

(a) Where two or more canisters or cartridges are used in parallel, their resistance to airflow shall be essentially equal.

(b) The color and markings of all canisters and cartridges or labels shall conform with the requirements of the American National Standards Institute, American National Standard for Identification of Air-Purifying Respirator Canisters and Cartridges, ANSI K13.1–1973. ANSI K13.1 is incorporated by reference and has been approved by the Director of the Federal Register in accordance with 5 U.S.C. 552(a) and 1 CFR part 51. Copies may be obtained from American National Standards Institute, Inc., 1430 Broadway, New York, NY 10018. Copies may be inspected at the NIOSH, Certification and Quality Assurance Branch, 1095 Willowdale Road, Morgantown, WV 26505–2888, or at the Office of the Federal Register, 800 North Capitol Street, NW., suite 700, Washington, DC.

§ 84.1155 Filters used with canisters and cartridges; location; replacement.

(a) Particulate matter filters used in conjunction with a canister or cartridge shall be located on the inlet side of the canister or cartridge.

(b) Filters shall be incorporated into or firmly attached to the canister or cartridge and each filter assembly shall, where applicable, be designed to permit its easy removal from and replacement on the canister or cartridge.

§ 84.1156 Pesticide respirators; performance requirements; general.

Pesticide respirators and the individual components of each such device shall, as appropriate, meet the following minimum requirements for performance and protection:

(a) *Breathing resistance test.* (1) Airflow resistance will be measured in the facepiece, mouthpiece, hood, or helmet of a pesticide respirator mounted on a test fixture with air flowing at a continuous rate of 85 liters per minute, both before and after each test conducted in accordance with paragraphs (c) and (f) of this section.

(2) The maximum allowable resistance requirements for pesticide respirators are as follows:

MAXIMUM RESISTANCE

[mm. water-column height]

Type of pesticide respirator	Inhalation		Exhalation
	Initial	Final [1]	
Front- or back-mounted gas mask	70	85	20
Chin-style gas mask	65	80	20
Powered air-purifying [2]	[2] 50	[2] 70	20
Chemical Cartridge	50	70	20

[1] Measured at end of the service life specified in Table 14 of this subpart.
[2] Resistance of filter(s), cartridge(s), and breathing tube(s) only with blower not operating.

(b) *Facepiece test.* (1) The complete pesticide respirator will be fitted to the faces of persons having varying facial shapes and sizes.

(2) Where the applicant specifies a facepiece size or sizes for his respirator together with the approximate measurements of faces they are designed to fit, the Institute will provide test subjects to suit such facial measurements.

(3) Any pesticide respirator part which must be removed to perform the facepiece fit test shall be replaceable without special tools and without disturbing facepiece fit.

(4) The facepiece or mouthpiece fit test using positive or negative pressure recommended by the applicant and described in his instructions will be used during each test.

(5)(i) Each wearer will enter a chamber containing 1,000 p.p.m. isoamyl-acetate vapor for a respirator equipped with a full facepiece, mouthpiece, hood, or helmet and 100 p.p.m. isoamyl-acetate vapor for a respirator equipped with a half-mask facepiece.

(ii) The facepiece, mouthpiece, hood, or helmet may be adjusted, if necessary, in the test chamber before starting the test.

(iii) Each wearer will remain in the chamber while performing the following activities:

(A) Two minutes, nodding and turning head;

(B) Two minutes, calisthenic arm movements;

(C) Two minutes, running in place; and

(D) Two minutes, pumping with a tire pump into a 28-liter (1 cubic foot) container.

(iv) Each wearer shall not detect the odor of isoamyl-acetate during the test.

(c) *Silica dust test.* Three completely assembled pesticide respirators will be tested with a mechanical-testing apparatus as follows:

(1) Temperature in the test chamber will be approximately 25° C.

(2) Continuous airflow through the respirator will be 32 liters per minute for front-mounted, back-mounted, and chin-style gas mask pesticide respirators and chemical cartridge pesticide respirators, and not less than 115 (4 cubic feet) liters per minute to tight-fitting facepieces and 170 liters (6 cubic feet) per minute to loose-fitting hoods and helmets of powered air-purifying respirators.

(3) The test aerosol will contain 50–60 milligrams of 99+ percent free silica per cubic meter of air.

(4) The particle size distribution of the test suspension will have a geometric mean diameter of 0.4 to 0.6 micrometer, with a standard geometric deviation less than 2.

(5) Front-mounted, back-mounted, and chin-style gas mask pesticide respirators and chemical cartridge pesticide respirators will be tested for 90 minutes and powered air-purifying respirators will be tested for 4 hours.

(d) *Lead fume test.* Three completely assembled pesticide respirators will be tested with a mechanical-testing apparatus as follows:

(1) Continuous airflow through the respirator will be 32 liters per minute for front-mounted, back-mounted, and

chin-style gas mask pesticide respirators and chemical cartridge pesticide respirators and not less than 115 liters (4 cubic feet) per minute, for powered air-purifying respirators with tight-fitting facepieces, and not less than 170 liters (6 cubic feet) per minute for powered air-purifying respirators with loose-fitting hoods and helmets.

(2) The test aerosol will contain 15–20 milligrams of freshly generated lead-oxide fume, calculated as lead, per cubic meter of air.

(3) The fume will be generated by impinging an oxygen-gas flame on molten lead.

(4) Front-mounted, back-mounted, and chin-style gas mask pesticide respirators and chemical cartridge pesticide respirators will be tested for 90 minutes and powered air-purifying pesticide respirators will be tested for 4 hours.

(5) The total amount of unretained test suspension, which is analyzed and calculated as lead, shall not exceed:

(i) 0.43 milligram for any 90-minute test;

(ii) 4.8 milligrams for any 4-hour test made at 115 liters (4 cubic feet) per minute; or

(iii) 6.2 milligrams for any 4-hour test made at 170 liters (6 cubic feet) per minute.

(e) *Dioctyl-phthalate test.* (1) All canisters submitted for use with front-mounted and back-mounted gas mask pesticide respirators will be tested in an atmospheric concentration of 100 micrograms of dioctyl-phthalate per liter of air at continuous flow rates of 32 and 85 liters per minute for a test period of 5 to 10 seconds.

(2) The DOP leakage through the canister shall not exceed 0.03 percent of the ambient DOP concentration.

(f) *Bench tests for pesticide respirators.* (1)(i) Bench tests will be made on an apparatus that allows the test atmosphere at 50±5 percent relative humidity and at room temperature (25°±2.5° C.) to enter the canister or cartridge at predetermined concentrations and rates of flow, and that has a means for determining the test life of the canister or cartridge against carbon tetrachloride.

(ii) Canisters and cartridges will be tested as they are used on each pesticide respirator, either singly or in pairs.

(iii) Three canisters or cartridges or pairs of cartridges will be removed from containers and tested as received from the applicant.

(iv) Two canisters, cartridges, or pairs of cartridges will be equilibrated at room temperature by passing 25 percent relative humidity air through them at the following flow rates (expressed as liters per minute (l.p.m.)) for 6 hours:

Type of canister or cartridge	Airflow rate, l.p.m.
Air-purifying canister	64
Air-purifying cartridge	25
Powered air-purifying with tight-fitting facepiece	115
Powered air-purifying with loose-fitting hood or helmet	170

(v) Two canisters, cartridges, or pairs of cartridges will be equilibrated at room temperature by passing 85 percent relative humidity air through them at the flow rates stated in paragraph (f)(1)(iv) of this section for 6 hours.

(vi) The equilibrated canisters or cartridges will be resealed, kept in an upright position at room temperature, and tested within 18 hours.

(2) Canisters and cartridges tested in accordance with the provisions of this section shall meet the requirements specified in Table 14 of this subpart.

§ 84.1157 Chemical cartridge respirators with particulate filters; performance requirements; general.

Chemical cartridge respirators with particulate filters and the individual components of each such device shall, as appropriate, meet the following minimum requirements for performance and protection:

(a) *Breathing resistance test.* (1) Resistance to airflow will be measured in the facepiece, mouthpiece, hood, or helmet of a chemical cartridge respirator mounted on a test fixture with air flowing at a continuous rate of 85 liters per minute, both before and after each test conducted in accordance with paragraphs (d) through (f) of this section.

(2) The maximum allowable resistance requirements for chemical cartridge respirators are as follows:

MAXIMUM RESISTANCE

[mm. water-column height]

Type of chemical cartridge respirator	Inhalation		Exhalation
	Initial	Final [1]	
For gases, vapors, or gases and vapors, and dusts, fumes, and mists	50	70	20
For gases, vapors, or gases and vapors, and mists of paints, lacquers, and enamels	50	70	20

[1] Measured at end of service life specified in Table 11 in subpart L of this part.

(b) *Facepiece test.* The facepiece test will be conducted as specified in § 84.205.

(c) *Lacquer and enamel mist tests; general.* (1) Three respirators with cartridges containing or having attached to them, filters for protection against mists of paints, lacquers, and enamels shall be tested in accordance with the provisions of paragraph (f) of this section.

(2) In addition to the test requirements set forth in paragraph (c)(1) of this section, three such respirators will be tested against each aerosol in accordance with the provisions of paragraphs (d) and (e) of this section.

(d) *Lacquer mist test.* (1) Temperature in the test chamber will be approximately 25° C.

(2) Continuous airflow through the respirator will be 32 liters per minute for air-purifying respirators, and not less than 115 liters per minute to tight fitting facepieces and 170 liters per minute to loose-fitting hoods and helmets of powered air-purifying respirators.

(3) Airflow through the chamber will be 20–25 air changes per minute.

(4) The atomizer employed will be a No. 64–5 nozzle with setup 3, or equivalent, operating at 69 kN/m.^{2} (10 pounds per square inch gage).

(5) The test aerosol will be prepared by atomizing a mixture of one volume of clear cellulose nitrate lacquer and one volume of lacquer thinner. The lacquer described in Federal Specification TT–L–31, October 7, 1953, is an example of an acceptable lacquer. Copies of TT–L–31 may be inspected or obtained from the NIOSH, Certification and Quality Assurance Branch, 1095 Willowdale Road, Morgantown, WV 26505–2888.

(6) The concentration of cellulose nitrate in the test aerosol will be 95–125 milligrams per cubic meter.

(7) The test aerosol will be drawn to each respirator for a total of 156 minutes for air-purifying respirators and 240 minutes for powered air-purifying respirators.

(8) The total amount of unretained mist in the samples taken during testing, weighed as cellulose nitrate, shall not exceed 5 milligrams for an air-purifying respirator, 28 milligrams for a powered air-purifying respirator with tight-fitting facepiece, and 41 milligrams for a powered air-purifying respirator with loose-fitting hood or helmet.

(e) *Enamel mist test.* (1) Temperature in the test chamber will be approximately 25° C.

(2) Continuous airflow through the respirator will be 32 liters per minute for air-purifying respirators, and not less than 115 liters per minute to tight-fitting facepieces and 170 liters per minute to loose-fitting hoods and helmets of powered air-purifying respirators.

(3) Airflow through the chamber will be 20–25 air changes per minute.

(4) The atomizer employed will be a No. 64 nozzle with setup 1A, or equivalent, operating at 69 kN/m.^{2} (10 pounds per square inch gage).

(5) The test aerosol will be prepared by atomizing a mixture of 1 volume of white enamel and 1 volume of turpentine. The enamel described in Federal Specification TT-E–489b, May 12, 1953, with amendment-1 of 9 November 1955 is an example of an acceptable enamel. Copies of TT-E–489b may be inspected or obtained from the NIOSH, Certification and Quality Assurance Branch, 1095 Willowdale Road, Morgantown, WV 26505–2888.

(6) The concentration of pigment in the test aerosol, weighed as ash, will be 95–125 milligrams per cubic meter.

(7) The test aerosol will be drawn to each respirator for a total of 156 minutes for air-purifying respirators and 240 minutes for power air-purifying respirators.

(8) The total amount of unretained mist in the samples taken during testing, weighed as ash, shall not exceed 1.5 milligrams for any air-purifying respirator, 8.3 milligrams for a powered air-purifying respirator with tight-fitting facepiece, and 12.3 milligrams for a powered air-purifying respirator with loose-fitting hood or helmet.

(f) *Bench tests; gas and vapor tests.* (1) Bench tests will be made in accordance with §84.207 and tested cartridges shall meet the minimum requirements set forth in Table 11 of subpart L of this part. Cartridges will be equilibrated in accordance with paragraph (f)(2) of this section.

(2)(i) Two powered air-purifying cartridges or pairs of cartridges will be equilibrated at room temperature by passing 25 percent relative humidity air through them at the following flow rates (expressed in liters per minute (l.p.m.)) for 6 hours:

Type of cartridge	Airflow rate, l.p.m.
Powered air purifying with tight-fitting facepiece	115
Powered air purifying with loose-fitting hood or helmet	170

(ii) Two powered air-purifying cartridges or pairs of cartridges will be equilibrated by passing 85 percent relative humidity air through them at the flow rates stated in paragraph (f)(2)(i) of this section.

(iii) All cartridges will be resealed, kept in an upright position, at room temperatures, and tested within 18 hours.

§84.1158 Dust, fume, and mist tests; respirators with filters; minimum requirements; general.

(a) Three respirators with cartridges containing, or having attached to them, filters for protection against dusts, fumes, and mists, except the mists of paints, lacquers, and enamels, will be tested in accordance with the provisions of §84.1157(f).

(b) In addition to the test requirements set forth in paragraph (a) of this section, three such respirators will be tested, as appropriate, in accordance with the provisions of §§84.1141 through 84.1152; however, the maximum allowable resistance of complete dust, fume, and mist, and gas, vapor, or gas and vapor chemical cartridge respirators shall not exceed the maximum allowable limits set forth in §84.1157(a)(2).

Tables to Subpart KK of Part 84

TABLE 12.—FACEPIECE TEST REQUIREMENTS

[42 CFR Part 84, Subpart KK]

Respirator types	Pressure tightness test [1]	Isoamyl acetate test	
		84.1141	84.1142
Dusts: Air Contamination Level not less than 0.05 mg/M^3 or 2 mppcf	X		
Fumes: Air Contamination Level not less than 0.05 mg/M^3	X	X	
Mists: Air Contamination Level not less than 0.05 mg/M^3 or 2 mppcf	X		
Dusts, Fumes, and Mists: Air Contamination Level less than 0.05 mg/M^3 or 2 mppcf, and radionuclides	X		X
Radon daughters	X	X	
Asbestos-containing dusts and mists	X		

[1] Test is required only where applicable.

TABLE 13.—AIR-PURIFYING AND POWERED AIR-PURIFYING RESPIRATOR FILTER TESTS REQUIRED FOR APPROVAL

[42 CFR Part 84, Subpart KK]

Respirator types	Silica dust tests			Lead fume test 84.1146	Silica mist test 84.1147	DOP test 84.1151
	84.1144	84.1145	84.1152			
Dusts: Air Contamination Level not less than 0.05 mg/M^3 or 2 mppcf	X					
Fumes: Air Contamination Level not less than 0.05 mg/M^3				X		

TABLE 13.—AIR-PURIFYING AND POWERED AIR-PURIFYING RESPIRATOR FILTER TESTS REQUIRED FOR APPROVAL—Continued

[42 CFR Part 84, Subpart KK]

Respirator types	Silica dust tests			Lead fume test 84.1146	Silica mist test 84.1147	DOP test 84.1151
	84.1144	84.1145	84.1152			
Mists: Air Contamination Level not less than 0.05 mg/M³ or 2 mppcf					X	
Dusts, Fumes, and Mists: Air Contamination Level less than 0.05 mg/M³ or 2 mppcf, and radionuclides			X			X
Radon daughters	[1] X				[2] X	
Asbestos-containing dusts and mists	[2] X				[3] X	
Single use dust and mist respirators		[3] X			[3] X	

[1] For resistance only.
[2] For penetration only.
[3] Test required only where applicable.

TABLE 14.—CARBON TETRACHLORIDE BENCH TESTS AND REQUIREMENTS FOR CANISTERS AND CARTRIDGES

[42 CFR part 84, Subpart KK]

Type of pesticide respirator	Test concentration p.p.m. CCl_4	Flow rate l.p.m.	Number of tests	Minimum life minutes[1]
Chest-mounted or back-mounted gas mask (as received)	20,000	64	3	12
Chest-mounted or back-mounted gas mask (equilibrated)	20,000	32	4	12
Chin-style gas mask (as received)	5,000	64	3	12
Chin-style gas mask (equilibrated)	5,000	32	4	12
Chemical Cartridge respirator (as received)	1,000	64	3	50
Chemical cartridge respirator (equilibrated)	1,000	32	4	50
Powered air-purifying respirator (tight-fitting facepiece, as received)	1,000	[2] 115	3	50
Powered air-purifying respirator (tight-fitting facepiece, equilibrated)	1,000	[2] 115	4	25
Powered air-purifying respirator (loose-fitting hood or helmet, as received)	1,000	[3] 170	3	50
Powered air-purifying respirator (loose-fitting hood or helmet, equilibrated)	1,000	[3] 170	4	25

[1] Minimum life will be determined at 5 p.p.m. leakage.
[2] The flow rate shall be the effective flow rate of the device, but shall be not less than 115 l.p.m.
[3] The flow rate shall be the effective flow rate of the device, but shall be not less than 170 l.p.m.

PART 85—REQUESTS FOR HEALTH HAZARD EVALUATIONS

Sec.
85.1 Applicability.
85.2 Definitions.
85.3 Procedures for requesting health hazard evaluations.
85.3–1 Contents of a request for health hazard evaluations.
85.4 Acting on requests.
85.5 Authority for investigations.
85.6 Advance notice of visits.
85.7 Conduct of investigations.
85.8 Provision of suitable space for employee interviews and examinations; identification of employees.
85.9 Representatives of employers and employees; employee requests.
85.10 Imminent dangers.
85.11 Notification of determination to employers, affected employees, and Department of Labor.
85.12 Subsequent requests for health hazard evaluations.

AUTHORITY: Sec. 8(g), 84 Stat. 1600; 29 U.S.C. 657(g) and sec. 508, 83 Stat. 803; 30 U.S.C. 957.

SOURCE: 37 FR 23640, Nov. 7, 1972, unless otherwise noted.

§ 85.1 Applicability.

This part 85 applies to health hazard evaluations requested by any employer or authorized representative of employees under section 20(a)(6) of the Occupational Safety and Health Act of 1970 or section 501(a)(11) of the Federal Mine Safety and Health Act of 1977. This part is not intended to preclude the use of other channels of communication with the National Institute for Occupational Safety and Health to

obtain information and technical assistance concerning toxic substances or physical agents.

[45 FR 2652, Jan. 14, 1980]

§ 85.2 Definitions.

Any term defined in the Occupational Safety and Health Act of 1970 or the Federal Mine Safety and Health Act of 1977 and not defined below shall have the meaning given it in the respective Acts. As used in this part:

OSH Act means the Occupational Safety and Health Act of 1970 (29 U.S.C. 651, *et seq.*).

FMSH Act means the Federal Mine Safety and Health Act of 1977 (30 U.S.C. 801, *et seq.*).

Authorized representative of employees means any person or organization meeting the conditions specified in § 85.3–1(e) (1), (2), or (3).

Employee has the same meaning as stated in the OSH Act and for the purposes of this part includes *miner* as defined in the FMSH Act.

Employer has the same meaning as stated in the OSH Act and for the purposes of this part includes *Operator* as defined in the FMSH Act.

Health hazard evaluation means the investigation and the determination of potentially toxic or hazardous effects of: (a) Any substance normally used or found in any place of employment to which the OSH Act is applicable, or (b) any substance or physical agent normally used or found in any place of employment to which the FMSH Act is applicable.

Investigation means a physical inspection of the place of employment under section 8 of the OSH Act or section 103 of the FMSH Act and includes inspection, sampling, observations, review of pertinent records, and other measurements reasonably necessary to determine whether any substance or physical agent found in the place of employment has potentially toxic or hazardous effects in the concentrations or levels used or found.

NIOSH means the National Institute for Occupational Safety and Health, Center for Disease Control, Public Health Service, Department of Health and Human Services.

NIOSH officer means a NIOSH employee who has been authorized by the Director, NIOSH, to conduct investigations according to this part.

Physical agent means any condition produced by the environment and/or work processes that can result in hazardous effects as defined in this section. Examples of physical agents are noise, temperature, illumination, vibration, radiation, and pressure.

Place of employment means any coal or other mine, factory, plant, establishment, construction site, or other area, workplace, or environment where work is performed by any employee of an employer.

Substance means any chemical or biological agent or dust which has the potential to produce toxic effects.

Toxic effects or *hazardous effects* are those effects which result in short- or long-term disease, bodily injury, affect health adversely, or endanger human life.

[45 FR 2652, Jan. 14, 1980]

§ 85.3 Procedures for requesting health hazard evaluations.

(a) Requests for health hazard evaluations should be addressed to the National Institute for Occupational Safety and Health as follows:

(1) *Requests from general industry*. Hazard Evaluations and Technical Assistance Branch, Division of Surveillance, Hazard Evaluations, and Field Studies, NIOSH, 4676 Columbia Parkway, Cincinnati, OH 45226.

(2) *Requests from mining industry*. Environmental Investigations Branch, Division of Respiratory Disease Studies, NIOSH, 944 Chestnut Ridge Road, Morgantown, WV 26505.

(b) Requests for health hazard evaluations shall be submitted in writing and signed by either: (1) The employer in whose place of employment the substance or physical agent is normally found, or (2) an authorized representative of employees (see § 85.3–1(e)) in the place of employment where the substance or physical agent is normally found.

[45 FR 2653, Jan. 14, 1980]

§ 85.3–1 Contents of a request for health hazard evaluation.

Each request for health hazard evaluation shall contain:

(a) The requester's name, address, and telephone number, if any.

(b) The name and address of the place of employment where the substance or physical agent is normally found.

(c) The specific process or type of work which is the source of the substance or physical agent, or in which the substance or physical agent is used.

(d) Details of the conditions or circumstances which prompted the request.

(e) A statement, if the requester is not the employer, that the requester is:

(1) An authorized representative or an officer of the organization representing the employees for purposes of collective bargaining; or

(2) An employee of the employer and is authorized by two or more employees employed in the same place of employment to represent them for purposes of these Acts (each such authorization shall be in writing and a copy submitted with the request for health hazard evaluation); or

(3) One of three or less employees employed in the place of employment where the substance or physical agent is normally found.

(f) A statement indicating whether or not the name(s) of the requester or those persons who have authorized the requester to represent them may be revealed to the employer by NIOSH.

(g) The following supplementary information if known to the requester:

(1) Identity of each substance or physical agent involved;

(2) The trade name, chemical name, and manufacturer of each substance involved;

(3) Whether the substance or its container or the source of the physical agent has a warning label; and

(4) The physical form of the substance or physical agent, number of people exposed, length of exposure (hours per day), and occupations of exposed employees.

NOTE: NIOSH has developed two forms entitled ''Request for Health Hazard Evaluation'' and ''Request for Mining Health Hazard Evaluation'' to assist persons in requesting evaluations. The forms are available upon request from the offices listed in § 85.3(a) (1) and (2) or from the Regional Consultant for Occupational Safety and Health in any Regional Office of the Department of Health and Human Services.

[45 FR 2653, Jan. 14, 1980]

§ 85.4 Acting on requests.

(a) Upon receipt of a request for health hazard evaluation submitted under this part, NIOSH will determine whether or not there is reasonable cause to justify conducting an investigation.

(b) If NIOSH determines that an investigation is justified, a NIOSH officer will inspect the place of employment, collect samples where appropriate, and perform tests necessary to the conduct of a health hazard evaluation, including medical examinations of employees.

(c) If NIOSH determines that an investigation is not justified, the requester will be notified in writing of the decision.

[45 FR 2653, Jan. 14, 1980]

§ 85.5 Authority for investigations.

(a) NIOSH officers who have been issued official NIOSH credentials (Form No. CDC/NIOSH 2.93) are authorized by the Director, NIOSH, under sections 20(a) (6) and 8 of the OSH Act and sections 501(a)(11) and 103 of the FMSH Act: To enter without delay any place of employment for the purpose of conducting investigations of all pertinent processes, conditions, structures, machines, apparatus, devices, equipment, records, and materials within the place of employment; and to conduct medical examinations, anthropometric measurements, and functional tests of employees within the place of employment as may be directly related to the specific health hazard evaluation being conducted. Investigations will be conducted in a reasonable manner, during regular working hours or at other reasonable times and within reasonable limits. In connection with any investigation, the NIOSH officers may question privately any employer, owner, operator, agent, or employee from the place of employment; and review, abstract, and duplicate records required by the Acts and regulations and any other related records.

(b) Areas under investigation which contain information classified by any

agency of the United States Government in the interest of national security will be investigated only by NIOSH officers who have obtained the proper security clearance and authorization.

[45 FR 2653, Jan. 14, 1980]

§ 85.6 Advance notice of visits.

(a) Advance notice of visits to the place of employment may be given to expedite a thorough and effective investigation. Advance notice will not be given when, in the judgment of the NIOSH officer, giving such notice would adversely affect the validity and effectiveness of the investigation.

(b) Where a request in accordance with this part has been made by an authorized representative of employees, advance notice in accordance with paragraph (a) of this section will be given by NIOSH to the requester, the representative of the employees for purposes of collective bargaining if such representative is other than the requester, and to the employer.

(c) Where a request in accordance with this part has been made by any employer, advance notice will be given by NIOSH to the employer. Upon the request of the employer, NIOSH will inform the authorized representative of employees of the visit: *Provided,* The employer furnishes NIOSH in writing with the identity of such representative and with such information as is necessary to enable NIOSH promptly to inform such representative of the visit.

§ 85.7 Conduct of investigations.

(a) Prior to beginning an investigation, NIOSH officers shall present their credentials to the owner, operator, or agent in charge at the place of employment, explain the nature, purpose, and scope of the investigation and the records specified in § 85.5 which they wish to review. Where the investigation is the result of a request submitted by an authorized representative of employees, a copy of the request shall be provided to the employer, except where the requester or any person authorizing the requester pursuant to § 85.3–1(e)(2) has indicated that NIOSH not reveal his name to the employer, in which case a summary of the basis for the request shall be provided to the employer.

(b) At the commencement of an investigation, the employer should precisely identify information which can be obtained in the workplace or workplaces to be inspected as trade secrets. If the NIOSH officer has no clear reason to question such identification, such information shall not be disclosed except in accordance with the provisions of section 20(a)(6) and section 15 of the OSH Act or section 501(a)(11) of the FMSH Act. However, if NIOSH at any time questions such identification by an employer, not less than 15 days' notice to an employer shall be given of the intention to remove the trade secret designation from such information. The employer may within that period submit a request to the Director, NIOSH, to reconsider this intention and may provide additional information in support of the trade secret designation. The Director, NIOSH, shall notify the employer in writing of the decision which will become effective no sooner than 15 days after the date of such notice.

(c) NIOSH officers are authorized to collect environmental samples and samples of substances or measurements of physical agents (including measurement of employee exposure by the attachment of personal sampling devices to employees with their consent), to take or obtain photographs related to the purpose of the investigation, employ other reasonable investigative techniques, including medical examinations of employees with the consent of such employees, and to question privately any employer, owner, operator, agent, or employee. The employer shall have the opportunity to review photographs taken or obtained for the purpose of identifying those which contain or might reveal a trade secret.

(d) NIOSH officers shall comply with all safety and health rules and practices at the place of employment being investigated, and they shall provide and use appropriate protective clothing and equipment. In situations requiring specialized or unique types of protective equipment, such equipment shall be furnished by the employer.

(e) The conduct of investigations shall be such as to preclude unreasonable disruption of the operations of the employer's establishment.

[37 FR 23640, Nov. 7, 1972, as amended at 45 FR 2653, Jan. 14, 1980; 49 FR 4739, Feb. 8, 1984]

§ 85.8 Provision of suitable space for employee interviews and examinations; identification of employees.

An employer shall, in request of the NIOSH officer, provide suitable space, if such space is reasonably available, to NIOSH to conduct private interviews with, and examinations of, employees. NIOSH officers shall consult with the employer as to the time and place of the medical examination and shall schedule such examinations so as to avoid undue disruption of the operations of the employer's establishment. NIOSH shall conduct, and assume the medical costs of, examinations conducted under this part.

§ 85.9 Representatives of employers and employees; employee requests.

(a) NIOSH officers shall be in charge of investigations. Where the request for a health hazard evaluation has been made by an authorized representative of employees, a representative of the employer and a representative authorized by his employees who is an employee of the employer shall be given an opportunity to accompany the NIOSH officer during the initial physical inspection of any workplace for the purpose of aiding the investigation by identifying the suspected hazard. The NIOSH officer may permit additional employer representatives and such additional representatives authorized by employees to accompany him where he determines that such additional representatives will further aid the investigation. However, if in the judgment of the NIOSH officer, good cause has been shown why accompaniment by a third party who is not an employee of the employer is reasonably necessary to the conduct of an effective and thorough investigation of the workplace, such third party may accompany the NIOSH officer during the inspection: *Provided, however,* That access by such persons to areas described in paragraph (d) of this section shall be in accordance with the requirements of such provision, and access to areas described in paragraph (e) of this section shall be with the consent of the employer. A different employer and employee representative may accompany the officer during each different phase of an inspection if this will not interfere with the conduct of the investigation.

(b) NIOSH officers are authorized to resolve all disputes as to who is the representative authorized by the employer and employees for the purpose of this section. If there is no authorized representative of employees, or if the NIOSH officer is unable to determine with reasonable certainty who is such representative, he shall consult with a reasonable number of employees concerning matters directly related to the health hazard evaluation.

(c) NIOSH officers are authorized to deny the right of accompaniment under this section to any person whose conduct interferes with a fair and orderly physical inspection.

(d) With regard to information classified by an agency of the U.S. Government in the interest of national security, only persons authorized to have access to such information may accompany an officer in areas containing such information.

(e) Upon request of an employer, any representative authorized under this § 85.9 by employees in any area containing trade secrets shall be an employee in that area or an employee authorized by the employer to enter that area.

§ 85.10 Imminent dangers.

Whenever, during the course of, or as a result of, an investigation under this part, the NIOSH officer believes that there is a reasonable basis for an allegation of an imminent danger, NIOSH will immediately advise the employer and those employees who appear to be in immediate danger of such allegation and will inform appropriate representatives of the Department of Labor or the State agency designated under section 18(b) of the OSH Act.

[37 FR 23640, Nov. 7, 1972, as amended at 45 FR 2653, Jan. 14, 1980]

§ 85.11 Notification of determination to employers, affected employees and Department of Labor.

(a) Upon conclusion of an investigation, NIOSH will make a determination concerning the potentially toxic or hazardous effects of each substance or physical agent investigated as a result of the request for health hazard evaluation. At a minimum, the determination will: (1) Identify each substance or physical agent involved and describe, where appropriate, the concentrations or levels of the substance or physical agent found in the place of employment and the conditions of use, and (2) state whether each substance or physical agent has potentially toxic or hazardous effects in the concentrations or levels found, as well as the basis for the judgments.

(b) Copies of the determination will be mailed to the employer and to the authorized representatives of employees.

(c) Except as hereinafter provided, the employer shall post a copy of the determination for a period of 30 calendar days at or near the workplace(s) of affected employees. The employer shall take steps to insure that the posted determinations are not altered, defaced, or covered by other material during such period. The employer will not be required to post the determination if the employer requests that copies of the determination be mailed to affected employees and furnishes NIOSH with a list of the names and mailing addresses of the employees employed in the workplace(s) designated by the NIOSH Officer. In the latter event, NIOSH will mail such copies to affected employees at the mailing addresses provided by the employer.

(d) For purposes of this section, the term ''affected employees'' means those employees determined by NIOSH to be exposed to the substance(s) or physical agent(s) which is the subject of the health hazard evaluation.

(e) Copies of determinations made under the OSH Act will be forwarded to the Department of Labor and the appropriate State agency designated under section 18(b) of the OSH Act. Copies of determinations made under the FMSH Act will be forwarded to the Mine Safety and Health Administration of the Department of Labor; the Bureau of Mines, Department of the Interior; and the State agency which, in the judgment of NIOSH, would benefit the most from the information. If NIOSH determines that any substance or physical agent has potentially toxic or hazardous effects at the concentrations or levels at which it is used or found in a place of employment, and the substance or physical agent is not covered by a safety or health standard established under section 6 of the OSH Act or section 101 of the FMSH Act, NIOSH will immediately submit the determination to the Secretary of Labor, together with all pertinent criteria.

[37 FR 23640, Nov. 7, 1972, as amended at 45 FR 2653, Jan. 14, 1980]

§ 85.12 Subsequent requests for health hazard evaluations.

If a request is received for a health hazard evaluation in a place of employment in which an evaluation under this part was made previously, NIOSH may make another investigation if, as a result of the passage of time or additional information, another investigation would be consistent with the purposes of the Acts.

[45 FR 2654, Jan. 14, 1980]

PART 85a—OCCUPATIONAL SAFETY AND HEALTH INVESTIGATIONS OF PLACES OF EMPLOYMENT

Sec.

85a.1 Applicability.
85a.2 Definitions.
85a.3 Authority for investigations of places of employment.
85a.4 Procedures for initiating investigations of places of employment.
85a.5 Conduct of investigations of places of employment.
85a.6 Provision of suitable space for employee interviews and examinations.
85a.7 Imminent dangers.
85a.8 Reporting of results of investigations of places of employment.

AUTHORITY: Sec. 8(g), 84 Stat. 1600; 29 U.S.C. 657(g) and sec. 508, 83 Stat. 803; 30 U.S.C. 957.

§ 85a.1 Applicability.

(a) Except as otherwise provided in paragraph (b) of this section, the provisions of this part apply to investigations of places of employment which are conducted by NIOSH under sections 20 and 8 of the Occupational Safety and Health Act of 1970 and sections 501 and 103 of the Federal Mine Safety and Health Act of 1977.

(b) The provisions of this part do not apply to those activities covered by part 85 of this chapter.

[41 FR 45002, Oct. 14, 1976, as amended at 45 FR 2654, Jan. 14, 1980]

§ 85a.2 Definitions.

Any term defined in the Occupational Safety and Health Act of 1970 or the Federal Mine Safety and Health Act of 1977 and not defined below shall have the meaning given it in the Acts. As used in this part:

(a) *OSH Act* means the Occupational Safety and Health Act of 1970 (29 U.S.C. 651 *et seq.*) and *FMSH Act* means the Federal Mine Safety and Health Act of 1977 (30 U.S.C. 801 *et seq.*).

(b) *Assistant Regional Director* means any one of the ten Occupational Safety and Health Administration Assistant Regional Directors for Occupational Safety and Health.

(c) *Informed consent* means the knowing consent of an individual or his legally authorized representative, so situated as to be able to exercise free power of choice without undue inducement or any element of force, fraud, deceit, duress, or other form of constraint or coercion. The basic elements of information necessary to such consent include:

(1) A fair explanation of the procedures to be followed, and their purposes, including identification of any procedures which are experimental;

(2) A description of any attendant discomforts and risks reasonably to be expected;

(3) A description of any benefits reasonably to be expected;

(4) A disclosure of any appropriate alternative procedures that might be advantageous for the subject;

(5) An offer to answer any inquiries concerning the procedures; and

(6) An instruction that the person is free to withdraw his consent and to discontinue participation in the investigation any time without prejudice to the subject.

(d) *Investigation* means research projects, experiments, demonstrations, studies, and similar activities of NIOSH which are conducted under section 20 of the OSH Act and section 501 of the FMSH Act.

(e) *Legally authorized representative* means an individual or judicial or other body authorized under applicable law to consent on behalf of a prospective subject to such subject's participation in the particular activity or procedure.

(f) *NIOSH* means the National Institute for Occupational Safety and Health of the Center for Disease Control, Public Health Service, Department of Health and Human Services.

(g) *NIOSH authorized representative* means a person authorized by NIOSH to conduct investigations of places of employment, including any person that is fulfilling a contract agreement with NIOSH or is serving as an expert or consultant to NIOSH pursuant to the Act.

(h) *NIOSH Regional Office* means any one of the ten Department of Health and Human Services Regional Offices, the addresses of which are specified in § 5.31 of title 45, Code of Federal Regulations.

(i) *Place of employment* means any coal or other mine, factory, plant, establishment, construction site, or other area, workplace or environment where work is performed by any employee of an employer.

(j) *MSHA District Office* means any one of the Mine Safety and Health Administration's District Offices.

(k) *BOM* means the Bureau of Mines, Department of the Interior.

(l) *Employee* has the same meaning as stated in the OSH Act and for the purposes of this part includes *miner* as defined in the FMSH Act.

(m) *Employer* has the same meaning as stated in the OSH Act and for the purposes of this part includes *operator* as defined in the FMSH ACT.

[41 FR 45002, Oct. 14, 1976, as amended at 45 FR 2654, Jan. 14, 1980]

§85a.3 Authority for investigations of places of employment.

(a) NIOSH authorized representatives who have been issued official NIOSH credentials are authorized by the Director, NIOSH, under sections 20 and 8 of the OSH Act, sections 501 and 103 of the FMSH Act, and this part. To enter without delay any place of employment for the purpose of conducting investigations of all pertinent processes, conditions, structures, machines, apparatus, devices, equipment, and materials within the place of employment; and to conduct medical examinations, anthropometric measurements and functional tests of employees within the place of employment as may be directly related to the specific investigation being conducted. Such investigations will be conducted in a reasonable manner, during regular working hours or at other reasonable times and within reasonable limits. In connection with any investigations, such NIOSH authorized representatives may question privately any employer, owner, operator, agent, or employee from the place of employment; and review, abstract, or duplicate employment records, medical records, records required by the Act and regulations, and other related records. In those instances where systems of records subject to review, abstraction or duplication are of a confidential nature, such as medical records, and are abstracted or duplicated, NIOSH will maintain such systems in accordance with the Privacy Act of 1974 (5 U.S.C. 552a) and the implementing regulation of the Department of Health and Human Services (45 CFR part 5b).

(b) Areas under investigation which contain information classified by any agency of the United States Government in the interest of national security will be investigated only by NIOSH authorized representatives who have obtained the appropriate security clearance and authorization.

[41 FR 45002, Oct. 14, 1976, as amended at 45 FR 2654, Jan. 14, 1980]

§85a.4 Procedures for initiating investigations of places of employment.

(a) Except as otherwise provided in paragraph (b) of this section, NIOSH authorized representatives will contact an official representative of the place of employment prior to any site visits and will provide the details of why an investigation of the place of employment is being conducted. Prior to the initiation of a site visit of a place of employment, representatives of the following organizations will be advised of the site visit and the reason for its conduct:

(1) The appropriate State agency designated under section 18(b) of the OSH Act, or if no State agency has been designated under the OSH Act and in the case of the FMSH Act, the State agency which, in the judgment of NIOSH, would benefit the most from the investigation's findings;

(2) If there is a local union at the place of employment, the local president, business manager or other appropriate individual;

(3) The appropriate Assistant Regional Director, when investigations are conducted under the OSH Act;

(4) The appropriate MSHA District Office; the Director, BOM, and the Assistant Director for Mining, BOM, when investigations are conducted under the FMSH Act.

(b) Advance notice of site visits will not be given to the place of employment or local union at the place of employment when, in the judgment of the NIOSH authorized representatives, giving such notice would adversely affect the validity and effectiveness of an investigation. Those individuals and organizations specified in §85a.4(a)(1), (a)(3) and (a)(4) will be notified prior to the initiation of such a site visit. After the site visit has been initiated, and, as soon as possible thereafter, the NIOSH authorized representatives will contact those individuals specified in §85a.4(a)(2) concerning the nature and details of the site visit.

(c) In those instances where site visits are not necessary to the conduct of an investigation, the NIOSH authorized representatives will contact an official representative of the place of employment either verbally or through a written communication and provide the details of why an investigation of the place of employment is being conducted. If appropriate, the NIOSH authorized representatives will contact

those individuals stipulated in paragraphs (a)(1), (a)(2), (a)(3), and (a)(4) of this section about the nature and details of the investigation.

[41 FR 45002, Oct. 14, 1976, as amended at 45 FR 2654, Jan. 14, 1980]

§ 85a.5 Conduct of investigations of places of employment.

(a)(1) Prior to beginning a site visit, NIOSH authorized representatives will present their credentials to the employer, owner, operator or agent in charge at the place of employment, explain the nature, purpose and scope of the investigation and the records specified in § 85a.3 which they wish to review, abstract or duplicate.

(2) In those instances where site visits are not necessary to the conduct of an investigation and the initial contact is made verbally, NIOSH authorized representatives will, at the request of the employer, owner, operator or agent in charge at the place of employment, provide a written explanation of the nature, purpose and scope of the investigation and the records specified in § 85a.3 which they wish to review, abstract or duplicate.

(b)(1) At the commencement of an investigation, the employer, owner, operator or agent in charge at the place of employment shall precisely identify that information which is trade secret and might be seen or obtained by the NIOSH authorized representatives during the investigation. If the NIOSH authorized representatives have no clear reason to question such identification, such information will not be disclosed by NIOSH in accordance with the provisions of section 15 of the OSH Act. Generally, NIOSH will not question trade secret designations; however, if NIOSH at any time does question such identification, not less than 15 days' notice to the employer, owner, operator or agent will be given of the intention to remove the trade secret designation from such information. The employer, owner, operator or agent may within that period submit a request to the Director, NIOSH, to reconsider this intention and may provide additional information in support of the trade secret designation. The Director, NIOSH, will notify the employer, owner, operator or agent in writing of the decision which will become effective no sooner than 15 days after the date of such notice.

(2) In those instances where the NIOSH authorized representative is a person fulfilling a contact agreement with NIOSH or is serving as an expert or consultant to NIOSH pursuant to the Act, the employer, owner, operator or agent in charge at the place of employment may, after advising the NIOSH contractor or consultant in writing, elect to withhold information deemed to be a trade secret from such a NIOSH authorized representative or prohibit entry into the area of the place of employment where such entry will reveal trade secrets. In those instances, where the subject information is needed or access to the area of the place of employment is necessary, in the judgment of NIOSH, to fulfill the goals of the investigation, NIOSH regular employees will then obtain the information or enter the subject area of the place of employment.

(c)(1) NIOSH authorized representatives will be in charge of site visits conducted pursuant to this part.

(2) Where there is a request by the representative of the State agency and/or employees, who were notified pursuant to § 85a.4(a)(1) or § 85a.4(a)(2) to accompany the NIOSH authorized representatives during the site visit of the place of employment, the NIOSH authorized representatives will allow this request if they determine that this will aid the investigation; or where, in the judgment of the NIOSH authorized representatives, good cause has been shown why accompaniment by a third party who is not an employee of the employer is reasonably necessary to the conduct of an effective and thorough site visit, they may permit such third party to accompany them during the site visit: *Provided however,* That access by such person(s) to areas described in § 85a.5(c)(4) shall be in accordance with the requirements of such provision and access to areas containing trade secrets shall be with the consent of the employer, owner, operator or agent in charge at the place of employment.

(3) NIOSH authorized representatives are authorized to deny the right of accompaniment under this paragraph to

any person whose conduct in their judgment interferes with a fair and orderly site visit. In all instances, a representative of the employer shall be permitted to accompany the NIOSH authorized representatives during the site visit of the place of employment.

(4) With regard to information classified by an agency of the United States Government in the interest of national security, only persons authorized to have access to such information may accompany NIOSH authorized representatives in areas containing such information.

(d)(1) NIOSH authorized representatives are authorized: To collect environmental samples and samples of substances; to measure environmental conditions and employee exposures (including measurement of employee exposure by the attachment of personal sampling devices to employees with their consent); to take or obtain photographs, motion pictures or videotapes related to the purpose of the investigation; to employ other reasonable investigative techniques, including medical examinations, anthropometric measurements and standardized and experimental functional tests of employees with the informed consent of such employees; to review, abstract, and duplicate such personnel records as are pertinent to mortality, morbidity, injury, safety, and other similar studies; and to question and interview privately any employer, owner, operator, agency, or employee from the place of employment. The employer, owner, operator, or agency shall have the opportunity to review photographs, motion pictures, and videotapes taken or obtained for the purpose of identifying those which contain or might reveal a trade secret.

(2) Prior to the conduct of medical examinations, anthropometric measurements or functional tests of any employees, the NIOSH authorized representatives will obtain approval of the procedures to be utilized from the NIOSH Human Subjects Review Board and no employee examination, measurement or test will be undertaken without the informed consent of such employee.

(e) NIOSH authorized representatives will comply with all safety and health rules and practices at the place of employment and all NIOSH, Occupational Safety and Health Administration, and Mine Safety and Health Administration regulations and policies during a site visit and will provide and use appropriate protective clothing and equipment. In situations requiring specialized or unique types of protective equipment, such equipment shall be furnished by the employer, owner, operator or agent in charge at the place of employment.

(f) The conduct of site visits will be such as to preclude unreasonable disruption of the operations of the place of employment.

[41 FR 45002, Oct. 14, 1976, as amended at 45 FR 2654, Jan. 14, 1980; 49 FR 4739, Feb. 8, 1984]

§85a.6 Provision of suitable space for employee interviews and examinations.

An employer, owner, operator or agent in charge at the place of employment shall, on request of the NIOSH authorized representatives, provide suitable space at the place of employment, if such space is reasonably available, to NIOSH to conduct private interviews with, and medical examinations, anthropometric measurements and functional tests of employees. NIOSH authorized representatives will consult with the employer, owner, operator or agent as to the time and place of the private interviews, medical examination, anthropometric measurements and functional tests and will schedule same so as to avoid undue disruption of work at the place of employment. NIOSH will conduct the medical interviews, measurements, examinations and tests specified under this part at its own expense.

[41 FR 45002, Oct. 14, 1976]

§85a.7 Imminent dangers.

Whenever, during the course of, or as a result of, an investigation under this part, the NIOSH authorized representatives believe there is a reasonable basis for an allegation of an imminent danger, NIOSH will immediately advise the employer, owner, operator or agent in charge at the place of employment and those employees who appear to be in immediate danger of such allegation

and will inform the agencies identified in § 85a.4(a)(1), (a)(3), and (a)(4).

[41 FR 45002, Oct. 16, 1976, as amended at 45 FR 2654, Jan. 14, 1980]

§ 85a.8 Reporting of results of investigations of places of employment.

(a)(1) Specific reports of investigations of each place of employment under this part, with identification of the place of employment, will be made available by NIOSH to the employer, owner, operator or agent in charge at the place of employment, with copies to the appropriate officials and Agencies notified pursuant to § 85a.4(a). Prior to release of such reports, a preliminary report will be sent by NIOSH to the employer, owner, operator or agent for review for trade secret information and technical inaccuracies that may inadvertently be presented in the report. If requested in writing, the data used to compile the reports will be made available by NIOSH to the employer, owner, operator or agent in charge at the place of employment, except that data will not be released in a form that is individually identifiable.

(2) All specific reports of investigations of each place of employment under this part will be available to the public from the NIOSH Regional Consultant for Occupational Safety and Health in the appropriate NIOSH Regional Office.

(3) In certain instances, specific reports of investigations of each place of employment will not be prepared. In such instances, a closing conference at the place of employment will be conducted by the NIOSH authorized representatives and those individuals participating in the site visit to discuss the findings of the site visit and appropriate recommendations.

(b)(1) Any specific findings of individual employee medical examinations, anthropometric measurements and functional tests will be released by NIOSH authorized representatives to the company physician, private physician, or other person only pursuant to the written authorization of the employee; otherwise, the specific findings and other personal records concerning individuals will be maintained in accordance with 45 CFR part 5b and section 3 of the Privacy Act of 1974 (5 U.S.C. 552a). Notice of all NIOSH systems of records as defined in 45 CFR 5b.1(n) as a result of the investigations of places of employment pursuant to this part will be published in the FEDERAL REGISTER under Notices of Systems of Records for the Department of Health and Human Services.

(2) In cases where an employee shows positive significant medical findings, the employee and the physician(s) designated by the employee under § 85a.8(b)(1) will be immediately notified by NIOSH.

(3) A summary of the findings of the examinations for each employee will be sent by NIOSH to the individual.

(c) The findings of a total investigation generally will be disseminated as part of NIOSH criteria documents, NIOSH technical reports, NIOSH information packets, scientific journals, presentations at technical meetings, or in other similar manners. These findings of a total investigation will be presented in a manner which does not identify any specific place of employment; however, it should be noted that the specific reports of investigations of each place of employment under this part are subject to mandatory disclosure, upon request, under the provisions of the Freedom of Information Act (5 U.S.C. 552).

[41 FR 45002, Oct. 14, 1976]

PART 86—GRANTS FOR EDUCATION PROGRAMS IN OCCUPATIONAL SAFETY AND HEALTH

Subpart A—General

Sec.
86.1 Applicability.
86.2 Definitions.
86.3 Inventions and discoveries.
86.4 Publications and copyrights.
86.5 Grant appeals procedure.

Subpart B—Occupational Safety and Health Training Grants

86.10 Nature and purpose of training grants.
86.11 Eligibility.
86.12 Application for a grant.
86.13 Project requirements.
86.14 Evaluation and grant award.
86.15 Payments.
86.16 Use of project funds.
86.17 Nondiscrimination.
86.18 Grantee accountability.

86.19 Human subjects; animal welfare.
86.20 Additional conditions.
86.21 Applicability of 45 CFR part 74.

Subpart C—Occupational Safety and Health Direct Traineeships

86.30 Nature and purpose of direct traineeships.
86.31 Eligibility; minimum requirements.
86.32 Application for direct traineeship.
86.33 Human subjects; animal welfare.
86.34 Evaluation and award of direct traineeships.
86.35 Payments.
86.36 Duration and continuation.
86.37 Terms and conditions.
86.38 Accountability.
86.39 Termination of direct traineeship.

AUTHORITY: Sec. 8(g), 84 Stat. 1600, 29 U.S.C. 657(g); sec. 21(a), 84 Stat. 1612, 29 U.S.C. 670(a).

SOURCE: 40 FR 29076, July 10, 1975, unless otherwise noted.

Subpart A—General

§86.1 Applicability.

The regulations of this part are applicable to the award of training grants and direct traineeships pursuant to section 21(a)(1) of the Occupational Safety and Health Act of 1970 (29 U.S.C. 670(a)(1)) to assist in providing an adequate supply of qualified personnel to carry out the purposes of the Act.

§86.2 Definitions.

Any term not defined herein shall have the same meaning as given it in the Act. As used in this part:

(a) *Act* means the Occupational Safety and Health Act of 1970 (29 U.S.C. 651 *et seq.*).

(b) [Reserved]

(c) *Secretary* means the Secretary of Health and Human Services and any other officer or employee of the Department of Health and Human Services to whom the authority involved has been delegated.

(d) *State* means a State of the United States, the District of Columbia, Puerto Rico, the Virgin Islands, American Samoa, Guam, and the Trust Territory of the Pacific Islands.

(e) *Training* means job-specific skill development, the purpose of which is to provide qualified personnel to carry out the purposes of the Act.

[40 FR 29076, July 10, 1975, as amended at 47 FR 53012, Nov. 24, 1982]

§86.3 Inventions and discoveries.

Any grant award pursuant to §86.14 or §86.33 is subject to the regulations of the Department of Health and Human Services as set forth in 45 CFR parts 6 and 8, as amended. Such regulations shall apply to any activity for which grant funds are in fact used whether within the scope of the project as approved or otherwise. Appropriate measures shall be taken by the grantee and by the Secretary to assure that no contracts, assignments or other arrangements inconsistent with the grant obligation are continued or entered into and that all personnel involved in the supported activity are aware of and comply with such obligations. Laboratory notes, related technical data, and information pertaining to inventions and discoveries shall be maintained for such periods, and filed with or otherwise made available to the Secretary, or those he may designate at such times and in such manner, as he may determine necessary to carry out such Department regulations.

§86.4 Publications and copyrights.

Except as may otherwise be provided under the terms and conditions of the award, the grantee may copyright without prior approval any publications, films or similar materials developed or resulting from a project supported by a grant under this part, subject, however, to a royalty-free, nonexclusive, and irrevocable license or right in the Government to reproduce, translate, publish, use, disseminate, and dispose, of such materials and to authorize others to do so.

§86.5 Grant appeals procedure.

The informal Public Health Service procedure for resolution of post-award grant disputes set forth in subpart D of part 50 of this title and the Department post-award grant appeals procedure in 45 CFR part 16 are applicable to any award made pursuant to this part.

Subpart B—Occupational Safety and Health Training Grants

§ 86.10 Nature and purpose of training grants.

(a) *Long-term training project grant.* A long-term training project grant is an award of funds to an eligible institution or agency, hereinafter called the ''grantee,'' to pay part or all of the costs of organized identifiable activities, hereinafter termed the ''project,'' that are undertaken to establish, strengthen, or expand graduate, undergraduate, or special training, of persons in the field of occupational safety and health. Such grants may be used to support training in, for example, occupational medicine, industrial hygiene, industrial nursing and occupational safety engineering and the training of technicians and paraprofessionals in such areas.

(b) *Short-term training project grant.* A short-term training project grant is an award of funds to an eligible institution or agency, hereinafter called the ''grantee,'' to pay part or all of the costs of organized identifiable activities, hereinafter termed the ''project'' that are undertaken to provide intensive training programs of less than 1 year for any one or a combination of the following purposes:

(1) To provide specialized instruction for occupational safety and health professional or career personnel which will increase their competence in an area in their respective fields.

(2) To prepare or expand the capabilities of occupational safety and health professional or career personnel for leadership roles as administrators or supervisors, and

(3) To prepare or expand the teaching capabilities of occupational safety and health professionals and career personnel.

(c) *Educational Resource Center Grant.* An educational resource center grant is an award of funds to an eligible institution or agency, hereinafter called the ''grantee,'' to pay part or all of the costs of organized identifiable activities, hereinafter termed the ''project,'' that are undertaken to provide for the combination of long-term and short-term training activities as described in § 86.13 (c).

[40 FR 29076, July 10, 1975, as amended at 42 FR 52401, Sept. 30, 1977]

§ 86.11 Eligibility.

(a) *Eligible applicants.* Any public or private educational or training agency or institution located in a state is eligible to apply for a grant under this subpart.

(b) *Projects eligible for long-term or short-term training grants or educational resource center grants.* Any project found by the Secretary to be a long-term training project within the meaning of § 86.10(a) or a short-term training project within the meaning of § 86.10(b) or an educational resource center grant project within the meaning of § 86.10(c) shall be eligible for a grant award. However, no applicant is eligible for assistance for a separate training project grant in any project period in which it receives an educational resource center grant. Nothing in the section shall prevent an existing training grant from being incorporated into an educational resource center grant award.

[40 FR 29076, July 10, 1975, as amended at 42 FR 52401, Sept. 30, 1977; 47 FR 53012, Nov. 24, 1982]

§ 86.12 Application for a grant.

(a) An application for a grant under this subpart shall be submitted to the Secretary at such time and in such form and manner as the Secretary may prescribe.[1] The application shall contain a full and adequate description of the project and of the manner in which the applicant intends to conduct the project in accordance with the requirements of this subpart, and a budget and justification of the amount of grant funds requested, and such other pertinent information as the Secretary may require.

(b) The application shall be executed by an individual authorized to act for the applicant and to assume for the applicant the obligations imposed by the

[1] Applications and instructions may be obtained from the Procurement and Grants Office, Centers for Disease Control, Atlanta, GA 30333.

regulations of this subpart and any additional conditions of the grant.

[40 FR 29076, July 10, 1975, as amended at 49 FR 38117, Sept. 27, 1984]

§ 86.13 Project requirements.

(a) An approvable application for a long-term training grant must contain each of the following, unless the Secretary determines that the applicant has established good cause for its omission.

(1) Provision of a method for development of the training curriculum and any attendant training materials and resources;

(2) Provision of a method for implementation of the needed training;

(3) Provision of an evaluation methodology, including the manner in which such methodology will be employed, to measure the achievement of the objectives of the training program; and

(4) Provision of a method by which trainees will be selected.

(b) In addition to the requirements set forth in paragraph (a) of this section, an approvable application for a short-term training grant must contain each of the following, unless the Secretary determines that the applicant has established good cause for its omission.

(1) Provision of a methodology to assess the particular skills, or knowledge that prospective trainees need to develop;

(2) Provision of at least 18 hours of formal instruction for a period of not less than 2½ days and not more than 1 academic year; and

(3) Assurances that no portion of the Federal funds will be used for (i) in-service training courses designed only for employees of a single agency, institution, or organization; (ii) correspondence courses; (iii) regular courses usually given for academic credit; or (iv) training the grantee's financial officers, program director, or the official who executed the application.

(c) In addition to the requirements set forth in paragraphs (a), (b)(1), and (b)(3) (ii), (iii) and (iv) of this section, an approvable application for an educational resource center grant must contain each of the following, unless the Secretary determines that the applicant has established good cause for its omission:

(1) A description, supported by appropriate documents, of cooperative arrangements to conduct an educational resource center among a medical school (with an established program in preventive or occupational medicine), a school of nursing, a school of public health or its equivalent, and a school of engineering or its equivalent. Other schools or departments with relevant disciplines and resources—e.g., toxicology, biostatistics, environmental health, law, business administration, education—may be represented and contribute as appropriate to the conduct of the total program.

(2) The identification of an educational resource center Director who possesses a demonstrated capacity for sustained productivity and leadership in occupational safety and health training who shall oversee the general operation of the educational resource center program and shall, to the extent possible, directly participate in training activities.

(3) A description of the full-time professional staff representing various disciplines and qualifications relevant to occupational safety and health and capable of planning, establishing, and carrying out or administering training projects undertaken by the educational resource center.

(4) A description of the training and research expertise, appropriate facilities and ongoing training and research activities in occupational safety and health areas.

(5) A description of its program for conducting education and training of occupational health physicians, occupational health nurses, industrial hygienists/engineers and safety personnel. There shall be full-time students in each of these core disciplines, with a goal of a minimum total of 30 full-time students. Training may also be conducted in other occupational safety and health career categories, e.g., industrial toxicology, biostatistics, epidemiology, and ergonomics. Training programs shall include appropriate field experience including experience with public health and safety agencies and labor-management health and safety activities.

(6) A specific plan for making an impact on the curriculum taught by relevant medical specialties, including radiology, orthopedics, dermatology, internal medicine, neurology, perinatal medicine, and pathology.

(7) A description of its program to assist other institutions or agencies located within the applicant's region including schools of medicine, nursing and engineering, among others, by providing curriculum materials and consultation for curriculum/course development in occupational safety and health, and by providing training opportunities for faculty members.

(8) A specific plan for preparing, distributing, and conducting courses, seminars and workshops to provide short-term and continuing education training courses for physicians, nurses, industrial hygienists, safety engineers and other occupational safety and health professionals, paraprofessionals and technicians, including personnel of labor-management health and safety committees, in the geographical region in which the educational resource center is located. The content and orientation of the curriculum/courses shall take into consideration and address problems relevant to the geographic region served. The goal shall be that the training be made available each year to a minimum of 200–250 trainees representing all of the above categories of personnel with priority given to providing occupational safety and health training to physicians in family practice, as well as in industrial practice, and industrial nurses. These courses shall be structured so that educational institutions, public health and safety agencies, professional societies or other appropriate agencies can utilize them to provide training at the local level to occupational safety and health personnel working in the workplace. Further, the educational resource center shall have a specific plan and demonstrated capability for implementing such training directly and through other institutions or agencies in the region including cooperative efforts with labor unions and industry trade associations where appropriate.

[40 FR 29076, July 10, 1975, as amended at 42 FR 52401, Sept. 30, 1977]

§ 86.14 Evaluation and grant award.

Within the limits of funds available for such purpose the Secretary may award grants to assist in the establishment and operation of those projects which will in his judgment best promote the purposes of section 21(a)(1) of the Act, taking into account:

(a) In the case of long-term training grants:

(1) The need for training in the area or areas of study outlined in the application;

(2) The degree to which the proposal represents a strengthening or expansion of the applicant's program in such areas;

(3) The record of the applicant's effectiveness in training in these or related areas as indicated, among other things, by the placement of its graduates;

(4) The competence of the project staff in relation to the service to be provided;

(5) The reasonableness of the budget in relation to the proposed project;

(6) The applicant's resources, including equipment, facilities, and funds, available for the project;

(7) The current and potential availability of students in the area of study to be offered and their prospective employability as a result of the proposed training;

(8) The extent to which the applicant expects to absorb faculty positions initiated as a result of the grant; and

(9) The degree to which the project adequately provides for the requirements set forth in § 86.13(a).

(b) In the case of short-term training:

(1) The relationship of the contents of the course to the current and emergency training needs to carry out the purposes of the Act;

(2) The qualifications of the instructional staff;

(3) The speed with which the training can be put to use by the persons proposed to be trained;

(4) The reasonableness of the budget in relation to the proposed project;

(5) The success of previous offerings of this course, or related courses;

(6) Evidence of ability to recruit trainees and the estimated number to be enrolled during each course offering; and

(7) The degree to which the proposed project adequately provides for the requirements set forth in §86.13(b).

(c) In the case of educational resource center grants:

(1) The criteria set forth in paragraphs (a) and (b) of this section.

(2) The degree to which the proposed project adequately provides for the requirements set forth in §86.13(c).

(d) The amount of any award shall be determined by the Secretary on the basis of his estimate of the sum necessary for all or a designated portion of direct project costs plus an additional amount for indirect costs, if any, which will be calculated by the Secretary either (1) on the basis of his estimate of the actual indirect costs reasonably related to the project, or (2) on the basis of a percentage, not to exceed 8 percent, of all, or a portion of, the estimated direct costs of the project when there are reasonable assurances that the use of such percentage will not exceed the approximate actual indirect costs. Such award may include an estimated provisional amount for indirect costs or for designated direct costs (such as travel or supply costs) subject to upward (within the limits of available funds) as well as downward adjustments to actual costs when the amount properly expended by the grantee for provisional items has been determined by the Secretary.

(e) All grant awards shall be in writing, shall set forth the amount of funds granted and the period for which support is recommended.

(f) Neither the approval of any project nor any grant award shall commit or obligate the United States in any way to make any additional, supplemental, continuation, or other award with respect to any approved project or portion thereof. For continuation support, grantees must make separate application annually at such times and in such form as the Secretary may direct.

[40 FR 29076, July 10, 1975, as amended at 42 FR 52402, Sept. 30, 1977]

§86.15 Payments.

The Secretary shall from time to time make payments to a grantee of all or a portion of any grant award, either in advance or by way of reimbursement for expenses incurred or to be incurred in the performance of the project to the extent he determines such payments necessary to promote prompt initiation and advancement of the approved project.

§86.16 Use of project funds.

(a) Any funds granted pursuant to this subpart as well as other funds to be used in performance of the approved project shall be expended solely for carrying out the approved project in accordance with section 21(a) of the Act, the regulations of this subpart, the terms and conditions of the award, and the applicable cost principles prescribed by subpart Q of 45 CFR part 74.

(b) Prior written approval by the Secretary of revision of the budget and project plan is required whenever there is to be a significant change in the scope or nature of project activities, which in the case of short term training grants, includes any change in the course dates or training sites.

(c) Grant funds are available for trainee stipends and for tuition, including fees and instructional materials, for travel costs related to training allowances. Stipends and allowances may not be increased or be paid beyond the term of the stipend on account of vacation an individual might have been entitled to but did not take.

(d) Stipends may only be paid to a trainee who is a citizen of the United States, an alien lawfully admitted to the United States for permanent residence, or a permanent resident of Guam, American Samoa, or the Trust Territory of the Pacific Islands.

(e) In the case of short term training grants, stipends may not be paid to persons receiving lecture fees, salary, travel expenses, or payment in any form as members of the course instructional staff.

(f) Grant funds used for alterations and renovations shall be subject to the condition that the grantee shall comply with the requirements of Executive Order 11246, as amended, and with the applicable regulations prescribed pursuant thereto.

§86.17 Nondiscrimination.

(a) Attention is called to the requirements of title VI of the Civil Rights Act of 1964 (78 Stat. 252, 42 U.S.C. 2000d

et seq.) and in particular section 601 of such Act which provides that no person in the United States shall on the grounds of race, color, or national origin be excluded from participation in, be denied the benefits of, or be subjected to, discrimination under any program or activity receiving Federal financial assistance. A regulation implementing such title VI, which applies to grants made under this subpart, has been issued by the Secretary of Health and Human Services with the approval of the President (45 CFR part 80).

(b) Attention is called to the requirements of title IX of the Education Amendments of 1972 (86 Stat. 373, 20 U.S.C. 1681 *et seq.*) and in particular to section 901 of such Act which provides that no person in the United States shall, on the basis of sex, be excluded from participation in, be denied the benefits of, or be subjected to discrimination under any education program or activity receiving Federal financial assistance.

(c) Attention is called to the requirements of section 504 of the Rehabilitation Act of 1973, as amended, which provides that no otherwise qualified handicapped individual in the United States shall, solely by reason of his handicap, be excluded from participation in, be denied the benefits of, or be subjected to discrimination under any program or activity receiving Federal financial assistance.

§ 86.18 Grantee accountability.

(a) *Accounting for grant award payments.* All payments made by the Secretary shall be recorded by the grantee in accounting records separate from the records of all other grant funds, including funds derived from other grant awards. With respect to each approved project the grantee shall account for the sum total of all amounts paid by presenting or otherwise making available evidence satisfactory to the Secretary of expenditures for direct and indirect costs meeting the requirements of this part: *Provided, however,* That when the amount awarded for indirect costs was based on a predetermined fixed-percentage of estimated direct costs, the amount allowed for indirect costs shall be computed on the basis of such predetermined fixed-percentage rates applied to the total, or a selected element thereof, of the reimbursable direct costs incurred.

(b) *Accounting for interest earned on grant funds.* Pursuant to section 203 of the Intergovernmental Cooperation Act of 1968 (42 U.S.C. 4213), a State will not be held accountable for interest earned on grant funds, pending their disbursement for grant purposes. A State, as defined in section 102 of the Intergovernmental Cooperation Act, means any one of the several States, the District of Columbia, Puerto Rico, any territory or possession of the United States, or any agency or instrumentality of a State, but does not include the governments of the political sudivisions of the State. All grantees other than a State, as defined in this section, must return all interest earned on grant funds to the Federal Government.

(c) *Grant closeout*—(1) *Date of final accounting.* A grantee shall render, with respect to each approved project, a full account, as provided herein, as of the date of termination of grant support. The Secretary may require other special and periodic accounting.

(2) *Final settlement.* There shall be payable to the Federal Government as final settlement with respect to each approved project the total sum of:

(i) Any amount not accounted for pursuant to paragraph (a) of this section; and

(ii) Any credits for earned interest pursuant to paragraph (b) of this section; and

(iii) Any other amounts due pursuant to subparts F, M, and O of 45 CFR part 74.

Such total sum shall constitute a debt owed by the grantee to the Federal Government and shall be recovered from the grantee or its successors or assignees by setoff or other action as provided by law.

§ 86.19 Human subjects; animal welfare.

No grant award may be made under this subpart unless the applicant has complied with:

(a) 45 CFR part 46 pertaining to the protection of human subjects; and

(b) Chapter 1–43 of the Department Grants Administration Manual[2] concerning animal welfare.

§ 86.20 Additional conditions.

The Secretary may with respect to any grant award impose additional conditions prior to or at the time of any award when in his judgment such conditions are necessary to assure or protect advancement of the approved project, the interests of public health, or the conservation of grant funds.

§ 86.21 Applicability of 45 CFR part 74.

The provisions of 45 CFR part 74, establishing uniform administrative requirements and cost principles, shall apply to all grants under this part to States and local governments as those terms are defined in subpart A of that part 74. The relevant provisions of the following subparts of part 74 shall also apply to grants to all grantee organizations under this part:

45 CFR PART 74

Subpart and Subject
A General.
B Cash depositories.
C Bonding and insurance.
D Retention and custodial requirements for records.
F Grant-related income.
G Matching and cost sharing.
K Grant payment requirements.
L Budget revision procedures.
M Grant closeout: Suspension, and termination.
O Property.
Q Cost principles.

Subpart C—Occupational Safety and Health Direct Traineeships

§ 86.30 Nature and purpose of direct traineeships.

A direct traineeship is an award of funds directly from the Federal Government to an individual (herein called the ''trainee'') for his subsistence and other expenses during a period in which he is acquiring training (a) in the occupational safety and health professions, (b) for research relating to occupational safety and health, or (c) for teaching in occupational safety and health.

§ 86.31 Eligibility; minimum requirements.

In order to be eligible for an award under this subpart an applicant must:

(a) Have been accepted by a public or private institution for the purpose of the activity for which the traineeship is sought.

(b) Be a U.S. citizen, an alien lawfully admitted to the United States for permanent residence or a permanent resident of Guam, American Samoa, or the Trust Territory of the Pacific Islands.

[40 FR 29076, July 10, 1975, as amended at 47 FR 53012, Nov. 24, 1982]

§ 86.32 Application for direct traineeship.

An application for a direct traineeship under this subpart shall be submitted to the Secretary at such times and in such form and manner as he may prescribe.[1] In addition to the information supplied by the applicant in his application, such further information may be required as is necessary to determine his or her qualifications.

[40 FR 29076, July 10, 1975, as amended at 49 FR 38117, Sept. 27, 1984]

§ 86.33 Human subjects; animal welfare.

Where the application is for training at a non-Federal institution, no award may be made under this subpart unless said institution has complied with:

(a) 45 CFR part 46 pertaining to the protection of human subjects; and

(b) Chapter 1–43 of the Department Grants Administration Manual[2]068 concerning animal welfare.

§ 86.34 Evaluation and award of direct traineeships.

Within the limits of funds available for such purpose and subject to the regulations of this part, the Secretary

[2] The Department Grants Administration Manual is available for inspection at the Public Information Office of the several Department Regional Offices and available for purchase at the Government Printing Office, GPO Document No. 894–523.

[1] Applications and instructions may be obtained from the Procurement and Grants Office, Centers for Disease Control, Atlanta, GA 30333.

[2] See footnote 2 to § 86.19.

may award direct traineeships to those qualified applicants who are in his judgment best able to carry out the purpose of the traineeships taking into consideration the need for training in the area of study specified in the application.

§ 86.35 Payments.

(a) Individuals receiving awards shall be entitled to such stipends and allowances as the Secretary may designate, taking into account such factors as the needs of the program, the cost of living, and the availability of funds.

(NOTE: These are prescribed in chapter 3–140 of the Department Grants Administration Manual[2]).

(b) Payments of stipends and allowances will, at the discretion of the Secretary, be made directly to the trainee or to the sponsoring institution for payment directly to the trainee.

§ 86.36 Duration and continuation.

Direct traineeship awards may be made for varying periods not in excess of 2 years. The Secretary may make one or more continuation awards for an additional period if he finds that satisfactory progress is being made toward accomplishment of the purpose of the initial traineeship award. Additional support may be provided on appropriate justification after expiration of the period of support in the previous award.

§ 86.37 Terms and conditions.

All direct traineeship awards shall be subject to the following terms and conditions:

(a) Training must be carried out at an institution found by the Secretary to provide a well-rounded course of instruction in the particular area of training for which the traineeship is awarded.

(b) No direct traineeship may be utilized to compensate any trainee for personal services or employment on behalf of the United States or any person.

§ 86.38 Accountability.

Accountability for payments will be subject to such requirements as may be specified by the Secretary.

§ 86.39 Termination of direct traineeship.

(a) The Secretary may terminate a direct traineeship at any time upon request of the trainee.

(b) After reasonable notice to the trainee and an opportunity for the presentation of the trainee's views and relevant evidence, the Secretary may terminate any direct traineeship prior to the date it would otherwise expire upon a determination that the trainee's performance is unsatisfactory, that the trainee is no longer attending the sponsoring institution, or that he or she is unfit or unable to carry out the purpose of the traineeship.

(c) The views and evidence of the trainee shall be presented in writing unless the Secretary determines that an oral presentation is desirable.

PART 87—NATIONAL INSTITUTE FOR OCCUPATIONAL SAFETY AND HEALTH RESEARCH AND DEMONSTRATION GRANTS

Sec.
87.1 To which programs does this regulation apply?
87.2 Definitions.
87.3 Who is eligible to apply for a grant under this part?
87.4 For what purposes may grants be awarded?
87.5 What information must be included in the grant application?
87.6 How will grant applications be evaluated and the grants awarded?
87.7 For what period of time will grants be awarded?
87.8 How may a grantee use grant funds?
87.9 Which other HHS regulations apply?

AUTHORITY: Sec. 8(g), 84 Stat. 1600 (29 U.S.C. 657(g)), sec. 508, 83 Stat. 803 (30 U.S.C. 957).

SOURCE: 46 FR 58676, Dec. 3, 1981, unless otherwise noted.

§ 87.1 To which programs does this regulation apply?

This regulation applies to research and demonstration project grants under:

(a) Section 20(a)(1) of the Occupational Safety and Health Act of 1970 (29 U.S.C. 669(a)(1)) for the support of studies related to occupational safety and health, and

(b) Section 501 of the Federal Mine Safety and Health Act of 1977 (30 U.S.C. 951) for the support of health research in mining. These grants are awarded and administered by the National Institute for Occupational Safety and Health, Centers for Disease Control, of the Public Health Service.

§87.2 Definitions.

As used in this regulation:

Demonstration project grant means an award of funds to an eligible applicant to assist in meeting the cost of conducting a demonstration, either on a pilot or full-scale basis, of the technical or economic feasibility or application of a new or improved procedure, method, technique, or approach that will further the research purposes described in §87.4.

Principal investigator for a research project, or *project director* for a demonstration project, means a single individual who is responsible for the scientific and technical direction of the project.

Research project grant means an award of funds to an eligible applicant to assist in meeting the costs of conducting an identified research activity or program, study, or experiment that will further the research purposes described in §87.4.

Secretary means the Secretary of Health and Human Services and any other officer or employee of the Department of Health and Human Services to whom the authority involved has been delegated.

§87.3 Who is eligible to apply for a grant under this part?

Any public or private agency or institution is eligible to apply for a grant under this part, except Federal agencies or institutions not specifically authorized by law to receive such a grant.

§87.4 For what purposes may grants be awarded?

(a) The Occupational Safety and Health Act authorizes grants for research, experiments, and demonstrations relating to occupational safety and health, including studies of the psychological factors involved. This authority includes projects to develop innovative methods, techniques, and approaches for dealing with occupational safety and health problems.

(b) The Federal Mine Safety and Health Act authorizes grants for research projects designed to:

(1) Improve working conditions and practices affecting health in coal or other mines and to prevent occupational diseases originating in the mining industry.

(2) Develop epidemiological information to (i) identify and define positive factors involved in occupational diseases of miners, (ii) provide information on the incidence and prevalence of pneumoconiosis and other respiratory ailments of miners, and (iii) improve health standards.

(3) Develop techniques for the prevention and control of occupational diseases of miners, including tests for hypersusceptibility and early detection.

(4) Evaluate the effect on bodily impairment and occupational disability of miners afflicted with an occupational disease.

(5) Study the relationship between coal or other mine environments and occupational diseases of miners.

(6) Study matters involving the protection of life and the prevention of diseases in connection with persons who, although not miners, work with or around the products of coal or other mines in areas outside of such mines and under conditions which may adversely affect the health and well-being of such persons.

(7) Develop effective respiratory equipment.

§87.5 What information must be included in the grant application?

The application must contain a complete description of the objective of the project and the plan for carrying out the research or demonstration, the name and qualifications of the principal investigator or project director and principal staff members, the total resources and facilities that will be available, and a justification of the amount of grant funds requested.

§87.6 How will grant applications be evaluated and the grants awarded?

(a) The Secretary may award grants to those applicants whose approved

projects will best promote the purposes of either the Occupational Safety and Health Act or the Federal Mine Safety and Health Act on the basis of an evaluation conducted by experts or consultants engaged for this purpose.

(b) This evaluation will take into account the scientific merit and significance of the project, the competency of the proposed staff in relation to the type of research or demonstration involved, the feasibility of the project, the likelihood of its producing meaningful results, the proposed project period, the adequacy of the applicant's resources available for the project, the amount of grant funds necessary for completion, and for mining grant applications, the recommendations of the Mine Health Research Advisory Committee.

(c) The Secretary may evaluate and approve two or more concurrent applications, each dealing with one or more specified aspects of the project, and make two or more concurrent grant awards for the project. This may be necessary when a project involves a number of different but related problems, activities, or disciplines which would require evaluation by different groups, or when support for a project could be more effectively administered by separate handling of various aspects of the project.

§ 87.7 For what period of time will grants be awarded?

(a) The notice of grant award specifies how long the Secretary intends to support the project without requiring the project to recompete for funds. This period, called the project period, will usually be for 3–5 years.

(b) Generally, the grant will initially be for 1 year and subsequent continuation awards will also be for 1 year at a time. A grantee must submit a separate application to have the support continued for each subsequent year. Decisions regarding continuation awards and the funding level of such awards will be of such factors as the grantee's progress and management practices, and the availability of funds. In all cases, continuation awards require a determination by the Secretary that continued funding is in the best interest of the Federal Government.

(c) Neither the approval of any application, nor the award of any grant commits or obligates the Federal Government in any way to make any additional, supplemental, continuation, or other award with respect to any approved application or portion of an approved application.

§ 87.8 How may a grantee use grant funds?

A grantee shall only spend funds it receives under this part according to the approved application and budget, the authorizing legislation, the terms and conditions of the grant award, the applicable cost principles specified in subpart Q of 45 CFR part 74, and the regulations of this part.

§ 87.9 Which other HHS regulations apply?

Several other regulations apply to grants under this part. These include, but are not limited to:

42 CFR part 50, subpart D—Public Health Service grant appeals procedure

45 CFR part 16—Procedures of the Departmental Grant Appeals Board

45 CFR part 46—Protection of human subjects

45 CFR part 74—Administration of grants

45 CFR part 75—Informal grant appeals procedures

45 CFR part 80—Nondiscrimination under programs receiving Federal assistance through the Department of Health and Human Services effectuation of title VI of the Civil Rights Act of 1964

45 CFR part 81—Practice and procedure for hearing under part 80 of this Title

45 CFR part 84—Nondiscrimination on the basis of handicap in programs and activities receiving or benefiting from Federal financial assistance

45 CFR part 91—Nondiscrimination on the basis of age in HHS programs or activities receiving Federal financial assistance

[49 FR 38117, Sept. 27, 1984]

SUBCHAPTER H—HEALTH ASSESSMENTS AND HEALTH EFFECTS STUDIES OF HAZARDOUS SUBSTANCES RELEASES AND FACILITIES

PART 90—ADMINISTRATIVE FUNCTIONS, PRACTICES, AND PROCEDURES

Sec.
90.1 Purpose and applicability.
90.2 Definitions.
90.3 Procedures for requesting health assessments.
90.4 Contents of requests for health assessments.
90.5 Acting on requests.
90.6 Notification of determination to conduct a health assessment in response to a request from the public.
90.7 Decision to conduct health effects study.
90.8 Conduct of health assessments and health effects studies.
90.9 Public health advisory.
90.10 Notice and comment period.
90.11 Reporting of results of health assessments and health effects studies.
90.12 Confidentiality of information.
90.13 Recordkeeping requirements.
90.14 Documentation and cost recovery.

AUTHORITY: 42 U.S.C. 9615; 42 U.S.C. 6939a(c).

SOURCE: 55 FR 5138, Feb. 13, 1990, unless otherwise noted.

§ 90.1 Purpose and applicability.

The provisions of this part set forth the policies and procedures of the Agency for Toxic Substances and Disease Registry (ATSDR) with respect to its conduct of health assessments and health effects studies under section 104(i) of Comprehensive Environmental Response, Compensation, and Liability Act, as amended by the Superfund Amendments and Reauthorization Act of 1986, and section 3019 of the Resource Conservation and Recovery Act. These provisions apply to ATSDR, as well as its contractors, agents, and those carrying out health assessments and health effects studies pursuant to agreements with ATSDR, such as other Federal agencies and States.

§ 90.2 Definitions.

Administrator means the Administrator of the Agency for Toxic Substances and Disease Registry or designee.

ATSDR means the Agency for Toxic Substances and Disease Registry, Public Health Service, U.S. Department of Health and Human Services.

CERCLA means the Comprehensive Environmental Response, Compensation, and Liability Act of 1980 (42 U.S.C. 9601 *et seq.*, Pub. L. 96–520), as amended by the Superfund Amendments and Reauthorization Act of 1986 (Pub. L. 99–499).

EPA means the U.S. Environmental Protection Agency.

Facility is defined in 42 U.S.C. 9601(9).

Hazardous substance is defined in 42 U.S.C. 9601(14). In addition, the term includes any pollutant or contaminant which the Administrator determines is appropriate for the purposes of carrying out his or her responsibilities under CERCLA.

Health assessment means the evaluation of data and information on the release of hazardous substances into the environment in order to assess any current or future impact on public health, develop health advisories or other recommendations, and identify studies or actions needed to evaluate and mitigate or prevent human health effects.

Health effects study means research, investigation, or study performed by ATSDR or other parties pursuant to an agreement with ATSDR to evaluate the health effects of exposure to hazardous substances at specific sites. This term includes, but is not limited to, epidemiological studies, exposure and disease registries, and health surveillance programs. This term does not include health assessments.

Owner or operator is defined in 42 U.S.C. 9601(20).

Peer review means review for scientific quality by a panel consisting of no less than three nor more than seven members, who shall be disinterested scientific experts selected by the Administrator of ATSDR on the basis of their reputation for scientific objectivity and the lack of institutional ties

with any person involved in the conduct of the study or research under review.

Person means an individual, firm, corporation, association, partnership, consortium, joint venture, commercial entity, United States Government, State, municipality, commission, political subdivision of a State, Indian tribe, or any interstate body.

Pollutant or contaminant is defined in 42 U.S.C. 9601(33).

Public health advisory is a statement by ATSDR containing a finding that a release poses a significant risk to human health and recommending measures to be taken to reduce exposure and eliminate or substantially mitigate the significant risk to human health.

Release is defined in 42 U.S.C. 9601(22).

§ 90.3 Procedures for requesting health assessments.

(a) ATSDR will accept requests to perform health assessments for a particular facility or release from any person or group of persons.

(b) All requests to ATSDR to perform health assessments should be addressed to: Assistant Administrator, Agency for Toxic Substances and Disease Registry, 1600 Clifton Road NE., Atlanta, GA 30333.

§ 90.4 Contents of requests for health assessments.

(a) Each request for a health assessment shall contain:

(1) The name, address (including zip code), and telephone number of the requestor;

(2) The organization or group the requestor represents, if any;

(3) The name, location, and description of the facility or release of concern;

(4) A statement providing information that individuals have been exposed to a hazardous substance and that the probable source is a release, or sufficient information to allow the Administrator to make such a finding;

(5) A statement requesting ATSDR to perform a health assessment.

(b) At his or her discretion, consistent with the requirements of CERCLA, the Administrator may decide not to require the preceding information be submitted with a request for a health assessment.

(c) Each request for a health assessment should include, where possible:

(1) Any other information pertaining to the facility or release, such as the nature and amount of the hazardous substances of concern or the identities of parties believed to be potentially responsible for the release;

(2) Potential pathways for human exposure, including a description of the media contaminated (e.g. soil, groundwater, air, etc.);

(3) The demographic nature and proximity of the potentially affected human population; and

(4) Other Federal, State, or local governmental agencies which were notified or that investigated the facility or release.

(d) This data collection has been reviewed and approved by OMB in accordance with the Paperwork Reduction Act and assigned the control number 0920–0204.

§ 90.5 Acting on requests.

(a) Upon receipt of a request for a health assessment submitted under this part, ATSDR will determine, in its discretion, whether or not there is a reasonable basis to justify conducting a health assessment. ATSDR will base this determination on, among other factors:

(1) Whether individuals have been exposed to a hazardous substance, for which the probable source of such exposure is a release;

(2) The location, concentration, and toxicity of the hazardous substances;

(3) The potential for further human exposure;

(4) The recommendations of other governmental agencies; and

(5) The ATSDR resources available and other ATSDR priorities, such as its responsibilities to conduct other health assessments and health effects studies.

(b) Where appropriate, ATSDR will request information from other Federal, State, and local governmental agencies, as well as other persons, pertaining to a facility or release which is the subject of a request from the public to ATSDR to conduct a health assessment.

(c) The requestor will be notified in writing of ATSDR's determination that either a health assessment will be performed, a health assessment will not be performed, or that further information concerning the facility or release is required before a decision can be made whether a health assessment will be performed.

(d) If a health assessment is not initiated in response to a request from the public, ATSDR shall provide a written explanation to the requestor of why a health assessment is not appropriate.

§90.6 Notification of determination to conduct a health assessment in response to a request from the public.

(a) Following a determination by ATSDR to conduct a health assessment in response to a request from the public, ATSDR shall notify in writing, at a minimum, the following parties of its intent to perform a health assessment:

(1) The U.S. Environmental Protection Agency;

(2) The appropriate State government environmental agency;

(3) The appropriate State and local health departments;

(4) The requestor;

(5) The owner or operator of the facility of concern, if their identity is readily available to ATSDR.

In addition, ATSDR will notify, in writing or by telephone, other potentially responsible parties, if their identity is readily available to ATSDR.

(b) At its discretion, ATSDR may notify any other persons which it feels may be affected by the release or have information pertaining to the release.

§90.7 Decision to conduct health effects study.

(a) ATSDR may decide, in its discretion, based upon the results of a health assessment or other available information, to conduct a health effects study for a particular site or sites. Such a decision may, in appropriate circumstances, be made prior to the completion of a health assessment for a site or sites. When deciding whether to conduct a health effects study, ATSDR will consider such factors as the results and recommendations of a health assessment for the site or sites and the need for additional information to determine whether individuals have been exposed to hazardous substances, the degree to which such exposure has occurred, and any possible health effects resulting from such exposure.

(b) Should ATSDR decide, in its discretion, to conduct a health effect study, it will notify the parties as specified in §90.6.

§90.8 Conduct of health assessments and health effects studies.

(a) Any interested person or persons may submit data or information to ATSDR for it to consider in its conduct of a health assessment or a health effects study. In performing a health assessment or a health effects study, ATSDR will consider data and information it has independently generated or received from other parties, such as EPA, other Federal agencies, State and local governmental agencies, businesses, citizen organizations, and community groups.

(b) ATSDR may determine it is necessary to conduct a site visit in connection with a health assessment or health effects study. The ATSDR representative may allow the participation of any person in the site visit which he or she, at his or her discretion, determines will aid in the conduct of the health assessment or health effects study.

(c) In the event that the information necessary to perform a health assessment or health effects study is not readily available from other sources, ATSDR may arrange for sampling or additional data gathering at a facility or release for the limited purpose of determining the existence of current or potential health problems.

§90.9 Public health advisory.

ATSDR may issue a public health advisory based on the findings of a health assessment, health effects, study, or other ATSDR involvement.

§90.10 Notice and comment period.

Following internal review by ATSDR and external peer review of a draft final report of the results of a health effects study, ATSDR will publish a notice that the draft final report is available for public review and comment. At

a minimum, the notice shall be published in at least one newspaper of general distribution in the local where the site is located. The notice shall describe how copies of the draft final report of the health effects study can be obtained and set a reasonable time period for interested persons to submit comments concerning the study. ATSDR may, at its discretion, respond in writing to comments it receives.

§ 90.11 Reporting of results of health assessments and health effects studies.

(a) ATSDR shall provide a report of the results of a health assessment or health effects study to EPA, the appropriate State and local governmental agencies, any person requesting ATSDR to conduct the health assessment, and parties potentially responsible for the release, if their identity is readily available to ATSDR. In addition, such reports shall be available to the general public upon request.

(b) In the event that ATSDR or its representatives conduct medical examinations of individuals in the course of a health effects study and the examination reveals a positive significant medical finding, the individual, and a physician if designated by the individual, will be promptly notified of that significant medical finding by ATSDR.

(c) A summary of the findings of all medical examinations for each individual will be sent by ATSDR to that individual.

(d) All studies and results of research conducted under this part (other than health assessments) shall be reported or adopted only after appropriate peer review.

§ 90.12 Confidentiality of information.

(a) ATSDR shall consider any medical information in individually identifiable form to be confidential information and shall release such information only in accordance with the Privacy Act (5 U.S.C. 552a) or other applicable Federal law.

(b) As provided under section 104(e)(7) of CERCLA, any records, reports, or information obtained from any person under this section shall be available to the public, except that upon a showing satisfactory to ATSDR by any person that records, reports, or information, or particular part thereof (other than health or safety effects data), to which any officer, employee, or representative of ATSDR has access under this part if made public would divulge information entitled to protection under the Trade Secrets Act (18 U.S.C. 1905), such information or particular portion thereof shall be considered confidential in accordance with the purposes of that section, except that such record, report, document, or information may be disclosed to other officers, employees, or authorized representatives of the United States concerned with carrying out statutorily mandated duties.

(c) In submitting data to ATSDR, a person may designate the data which such person believes is entitled to protection under paragraph (b) of this section and submit such designated data separately from other data submitted under this part. A designation under this paragraph shall be made in writing to the Administrator. However, should ATSDR at any time question such designation, not less than 15 days notice to the person sumitting the information shall be given of the intention to remove such trade secret designation from such information. The person may submit a request to the Administrator to reconsider this intention and may provide additional information in support of the trade secret designation. The Administrator shall notify the person in writing of the decision which will become effective no sooner than 15 days after the date of such notice.

§ 90.13 Recordkeeping requirements.

(a) ATSDR shall maintain a record of all health assessments and health effects studies. The Administrator shall, at his or her discretion, determine the contents of the record. At a minimum, the record shall include:

(1) The final ATSDR report of the health assessment or health effects study;

(2) Nonconfidential data and other information upon which that report is based or which was considered by ATSDR;

(3) Nonconfidential data or other information submitted by interested persons pertaining to the health assessment or health effects study;

(4) The protocol for the health effects study;

(5) A list of the individuals responsible for external peer review of the report of a health effects study, their comments, and ATSDR's response to the comments; and

(6) For health effects study, the notice announcing the availability of a draft final report for public review and comment, all comments received in response to the notice, and any responses to the comments by ATSDR.

(b) The record may contain a confidential portion which shall include all information determined to be confidential by the Administrator under this part.

(c) The Administrator may determine other documents are appropriate for inclusion in the record for health assessments or health effects studies.

(d) Predecisional documents, including draft documents, are not documents upon which ATSDR bases its conclusions in health assessments or health effects studies, and are not usually included in the record for health assessments or health effects studies.

(e) The record for ATSDR health assessments and health effects studies will be available for review, upon prior request, at ATSDR headquarters in Atlanta, Georgia.

(f) Nothing in this section is intended to imply that ATSDR's decisions to conduct health assessments or health effects studies, or the reports of health assessments or health effects studies, are subject to judicial review.

§ 90.14 Documentation and cost recovery.

(a) During all phases of ATSDR health assessments and health effects studies, documentation shall be completed and maintained to form the basis for cost recovery, as specified in section 107 of CERCLA.

(b) Where appropriate, the information and reports compiled by ATSDR pertaining to costs shall be forwarded to the appropriate EPA regional office for cost recovery purposes.

SUBCHAPTER I [RESERVED]
SUBCHAPTER J—VACCINES

PART 100—VACCINE INJURY COMPENSATION

Sec.
100.1 Applicability.
100.2 Average cost of a health insurance policy.
100.3 Vaccine injury table.

AUTHORITY: Sec. 215 of the Public Health Service Act (42 U.S.C. 216); sec. 2115 of the PHS Act; 100 Stat. 3767, as revised (42 U.S.C. 300aa–15); § 100.3 Vaccine Injury Table, issued under secs. 312 and 313 of Pub. L. 99–660, 100 Stat. 3779–3782 (42 U.S.C. 300aa–1 note); and sec. 2114(c) and (e) of the PHS Act, 100 Stat. 3766 and 107 Stat. 645 (42 U.S.C. 300aa–14(c) and (e)); and sec. 904(b) of Pub. L. 105–34, 111 Stat. 873.

§ 100.1 Applicability.

This part applies to the National Vaccine Injury Compensation Program (VICP) under subtitle 2 of title XXI of the Public Health Service (PHS) Act.

[60 FR 7693, Feb. 8, 1995]

§ 100.2 Average cost of a health insurance policy.

For purposes of determining the amount of compensation under the VICP, section 2115(a)(3)(B) of the PHS Act, 42 U.S.C. 300aa.15(a)(3)(B), provides that certain individuals are entitled to receive an amount reflecting lost earnings, less certain deductions. One of the deductions is the average cost of a health insurance policy, as determined by the Secretary of Health and Human Services. The Secretary has determined that the average cost of a health insurance policy is $158.00 per month. This amount will be revised to reflect the changes in the medical care component of the Consumer Price Index (All Urban Consumers, U.S. City Average), published by the United States Bureau of Labor Statistics, plus 2 percent per year. The revised amounts will be effective upon their delivery by the Secretary to the United States Claims Court, and the amounts will be published in a notice in the FEDERAL REGISTER from time to time as determined by the Secretary.

[57 FR 28099, June 24, 1992, as amended at 60 FR 7693, Feb. 8, 1995]

§ 100.3 Vaccine injury table.

(a) In accordance with section 312(b) of the National Childhood Vaccine Injury Act of 1986, title III of Pub. L. 99–660, 100 Stat. 3779 (42 U.S.C. 300aa–1 note) and section 2114(c) of the Public Health Service Act (42 U.S.C. 300aa–14(c)), the following is a table of vaccines, the injuries, disabilities, illnesses, conditions, and deaths resulting from the administration of such vaccines, and the time period in which the first symptom or manifestation of onset or of the significant aggravation of such injuries, disabilities, illnesses, conditions, and deaths is to occur after vaccine administration for purposes of receiving compensation under the Program:

VACCINE INJURY TABLE

Vaccine	Illness, disability, injury or condition covered	Time period for first symptom or manifestation of onset or of significant aggravation after vaccine administration
I. Vaccines containing tetanus toxoid (e.g., DTaP, DTP, DT, Td, or TT).	A. Anaphylaxis or anaphylactic shock	4 hours.
	B. Brachial Neuritis	2–28 days.
	C. Any acute complication or sequela (including death) of an illness, disability, injury, or condition referred to above which illness, disability, injury, or condition arose within the time period prescribed.	Not applicable.

VACCINE INJURY TABLE—Continued

Vaccine	Illness, disability, injury or condition covered	Time period for first symptom or manifestation of onset or of significant aggravation after vaccine administration
II. Vaccines containing whole cell pertussis bacteria, extracted or partial cell pertussis bacteria, or specific pertussis antigen(s) (e.g., DTP, DTaP, P, DTP–Hib).	A. Anaphylaxis or anaphylactic shock	4 hours.
	B. Encephalopathy (or encephalitis)	72 hours.
	C. Any acute complication or sequela (including death) of an illness, disability, injury, or condition referred to above which illness, disability, injury, or condition arose within the time period prescribed.	Not applicable.
III. Measles, mumps, and rubella vaccine or any of its components (e.g., MMR, MR, M, R).	A. Anaphylaxis or anaphylactic shock	4 hours.
	B. Encephalopathy (or encephalitis)	5–15 days (not less than 5 days and not more than 15 days).
	C. Any acute complication or sequela (including death) of an illness, disability, injury, or condition referred to above which illness, disability, injury, or condition arose within the time period prescribed.	Not applicable.
IV. Vaccines containing rubella virus (e.g., MMR, MR, R).	A. Chronic arthritis	7–42 days.
	B. Any acute complication or sequela (including death) of an illness, disability, injury, or condition referred to above which illness, disability, injury, or condition arose within the time period prescribed.	Not applicable.
V. Vaccines containing measles virus (e.g., MMR, MR, M).	A. Thrombocytopenic purpura	7–30 days.
	B. Vaccine-Strain Measles Viral Infection in an immunodeficient recipient.	6 months.
	C. Any acute complication or sequela (including death) of an illness, disability, injury, or condition referred to above which illness, disability, injury, or condition arose within the time period prescribed.	Not applicable.
VI. Vaccines containing polio live virus (OPV).	A. Paralytic Polio	
	—in a non-immunodeficient recipient ..	30 days.
	—in an immunodeficient recipient	6 months.
	—in a vaccine associated community case.	Not applicable.
	B. Vaccine-Strain Polio Viral Infection	
	—in a non-immunodeficient recipient ..	30 days.
	—in an immunodeficient recipient	6 months.
	—in a vaccine associated community case.	Not applicable.
	C. Any acute complication or sequela (including death) of an illness, disability, injury, or condition referred to above which illness, disability, injury, or condition arose within the time period prescribed.	Not applicable.
VII. Vaccines containing polio inactivated virus (e.g., IPV).	A. Anaphylaxis or anaphylactic shock	4 hours
	B. Any acute complication or sequela (including death of an illness, disability, injury, or condition referred to above which illness, disability, injury, or condition arose within the time period prescribed..	Not applicable.
VIII. Hepatitis B. vaccines	A. Anaphylaxis or anaphylactic shock	4 hours.
	B. Any acute complication or sequela (including death) of an illness, disability, injury, or condition referred to above which illness, disability, injury, or condition arose within the time period prescribed.	Not applicable.

VACCINE INJURY TABLE—Continued

Vaccine	Illness, disability, injury or condition covered	Time period for first symptom or manifestation of onset or of significant aggravation after vaccine administration
IX. Hemophilus influenzae type b polysaccharide vaccines (unconjugated, PRP vaccines).	A. Early-onset Hib disease	7 days.
	B. Any acute complication or sequela (including death) of an illness, disability, injury, or condition referred to above which illness, disability, injury, or condition arose within the time period prescribed.	Not applicable.
X. Hemophilus influenzae type b polysaccharide conjugate vaccines.	No Condition Specified	Not applicable.
XI. Varicella vaccine	No Condition Specified	Not applicable.
XII. Rotavirus vaccine	No condition specified	Not applicable.
XIII. Any new vaccine recommended by the Centers for Disease Control and Prevention for routine administration to children, after publication by the Secretary of a notice of coverage.	No Condition Specified	Not applicable.

(b) *Qualifications and aids to interpretation.* The following qualifications and aids to interpretation shall apply to the Vaccine Injury Table to paragraph (a) of this section:

(1) *Anaphylaxis and anaphylactic shock.* For purposes of paragraph (a) of this section, Anaphylaxis and anaphylactic shock mean an acute, severe, and potentially lethal systemic allergic reaction. Most cases resolve without sequelae. Signs and symptoms begin minutes to a few hours after exposure. Death, if it occurs, usually results from airway obstruction caused by laryngeal edema or bronchospasm and may be associated with cardiovascular collapse. Other significant clinical signs and symptoms may include the following: Cyanosis, hypotension, bradycardia, tachycardia, arrhythmia, edema of the pharynx and/or trachea and/or larynx with stridor and dyspnea. Autopsy findings may include acute emphysema which results from lower respiratory tract obstruction, edema of the hypopharynx, epiglottis, larynx, or trchea and minimal findings of eosinophilia in the liver, spleen and lungs. When death occurs within minutes of exposure and without signs of respiratory distress, there may not be significant pathologic findings.

(2) *Encephalopathy.* For purposes of paragraph (a) of this section, a vaccine recipient shall be considered to have suffered an encephalopathy only if such recipient manifests, within the applicable period, an injury meeting the description below of an acute encephalopathy, and then a chronic encephalopathy persists in such person for more than 6 months beyond the date of vaccination.

(i) An acute encephalopathy is one that is sufficiently severe so as to require hospitalization (whether or not hospitalization occurred).

(A) *For children less than 18 months of age* who present without an associated seizure event, an acute encephalopathy is indicated by a significantly decreased level of consciousness lasting for at least 24 hours. Those children less than 18 months of age who present following a seizure shall be viewed as having an acute encephalopathy if their significantly decreased level of consciousness persists beyond 24 hours and cannot be attributed to a postictal state (seizure) or medication.

(B) *For adults and children 18 months of age or older,* an acute encephalopathy is one that persists for at least 24 hours and characterized by at least two of the following:

(1) A significant change in mental status that is not medication related; specifically a confusional state, or a delirium, or a psychosis;

(*2*) A significantly decreased level of consciousness, which is independent of a seizure and cannot be attributed to the effects of medication; and

(*3*) A seizure associated with loss of consciousness.

(C) Increased intracranial pressure may be a clinical feature of acute encephalopathy in any age group.

(D) A ''significantly decreased level of consciousness'' is indicated by the presence of at least one of the following clinical signs for at least 24 hours or greater (see paragraphs (b)(2)(i)(A) and (b)(2)(i)(B) of this section for applicable timeframes):

(*1*) Decreased or absent response to environment (responds, if at all, only to loud voice or painful stimuli);

(*2*) Decreased or absent eye contact (does not fix gaze upon family members or other individuals); or

(*3*) Inconsistent or absent responses to external stimuli (does not recognize familiar people or things).

(E) The following clinical features alone, or in combination, do not demonstrate an acute encephalopathy or a significant change in either mental status or level of consciousness as described above: Sleepiness, irritability (fussiness), high-pitched and unusual screaming, persistent inconsolable crying, and bulging fontanelle. Seizures in themselves are not sufficient to constitute a diagnosis of encephalopathy. In the absence of other evidence of an acute encephalopathy, seizures shall not be viewed as the first symptom or manifestation of the onset of an acute encephalopathy.

(ii) *Chronic Encephalopathy* occurs when a change in mental or neurologic status, first manifested during the applicable time period, persists for a period of at least 6 months from the date of vaccination. Individuals who return to a normal neurologic state after the acute encephalopathy shall not be presumed to have suffered residual neurologic damage from that event; any subsequent chronic encephalopathy shall not be presumed to be a sequela of the acute encephalopathy. If a preponderance of the evidence indicates that a child's chronic encephalopathy is secondary to genetic, prenatal or perinatal factors, that chronic encephalopathy shall not be considered to be a condition set forth in the Table.

(iii) An encephalopathy shall not be considered to be a condition set forth in the Table if in a proceeding on a petition, it is shown by a preponderance of the evidence that the encephalopathy was caused by an infection, a toxin, a metabolic disturbance, a structural lesion, a genetic disorder or trauma (without regard to whether the cause of the infection, toxin, trauma, metabolic disturbance, structural lesion or genetic disorder is known). If at the time a decision is made on a petition filed under section 2111(b) of the Act for a vaccine-related injury or death, it is not possible to determine the cause by a preponderance of the evidence of an encephalopathy, the encephalopathy shall be considered to be a condition set forth in the Table.

(iv) In determining whether or not an encephalopathy is a condition set forth in the Table, the Court shall consider the entire medical record.

(3) *Residual Seizure Disorder*. (i) A petitioner may be considered to have suffered a residual seizure disorder for purposes of paragraph (a) of this section, if the first seizure or convulsion occurred 5–15 days (not less than 5 days and not more than 15 days) after administration of the vaccine and 2 or more additional distinct seizure or convulsion episodes occurred within 1 year after the administration of the vaccine which were unaccompanied by fever (defined as a rectal temperature equal to or greater than 101.0 degrees Fahrenheit or an oral temperature equal to or greater than 100.0 degrees Fahrenheit). A distinct seizure or convulsion episode is ordinarily defined as including all seizure or convulsive activity occurring within a 24-hour period, unless competent and qualified expert neurological testimony is presented to the contrary in a particular case.

(ii) For purposes of paragraph (a) of this section, a petitioner shall not be considered to have suffered a residual seizure disorder, if the petitioner suffered a seizure or convulsion unaccompanied by fever (defined as a rectal temperature equal to or greater than 101.0 degrees Fahrenheit or an oral temperature equal to or greater than 100.0 degrees Fahrenheit) before the fifth day after the administration of the vaccine involved.

(4) *Seizure and convulsion*. For purposes of paragraphs (b) (2) and (3) of this section, the terms, ''seizure'' and ''convulsion'' include myoclonic, generalized tonic-clonic (grand mal), and simple and complex partial seizures. Absence (petit mal) seizures shall not

be considered to be a condition set forth in the Table. Jerking movements or staring episodes alone are not necessarily an indication of seizure activity.

(5) *Sequela.* The term ''sequela'' means a condition or event which was actually caused by a condition listed in the Vaccine Injury Table.

(6) *Chronic Arthritis.* (i) For purposes of paragraph (a) of this section, chronic arthritis may be found in a person with no history in the 3 years prior to vaccination of arthropathy (joint disease) on the basis of:

(A) Medical documentation, recorded within 30 days after the onset, of objective signs of acute arthritis (joint swelling) that occurred between 7 and 42 days after a rubella vaccination;

(B) Medical documentation (recorded within 3 years after the onset of acute arthritis) of the persistence of objective signs of intermittent or continuous arthritis for more than 6 months following vaccination; and

(C) Medical documentation of an antibody response to the rubella virus.

(ii) For purposes of paragraph (a) of this section, the following shall not be considered as chronic arthritis: Musculoskeletal disorders such as diffuse connective tissue diseases (including but not limited to rheumatoid arthritis, juvenile rheumatoid arthritis, systemic lupus erythematosus, systemic sclerosis, mixed connective tissue disease, polymyositis/determatomyositis, fibromyalgia, necrotizing vascultitis and vasculopathies and Sjogren's Syndrome), degenerative joint disease, infectious agents other than rubella (whether by direct invasion or as an immune reaction) metabolic and endocrine diseases, trauma, neoplasms, neuropathic disorders, bone and cartilage disorders and arthritis associated with ankylosing spondylitis, psoriasis, inflammatory bowel disease, Reiter's syndrome, or blood disorders.

(iii) Arthralgia (joint pain) or stiffness without joint swelling shall not be viewed as chronic arthritis for purposes of paragraph (a) of this section.

(7) *Brachial neuritis.* (i) This term is defined as dysfunction limited to the upper extremity nerve plexus (i.e., its trunks, divisions, or cords) without involvement of other peripheral (e.g., nerve roots or a single peripheral nerve) or central (e.g., spinal cord) nervous system structures. A deep, steady, often severe aching pain in the shoulder and upper arm usually heralds onset of the condition. The pain is followed in days or weeks by weakness and atrophy in upper extremity muscle groups. Sensory loss may accompany the motor deficits, but is generally a less notable clinical feature. The neuritis, or plexopathy, may be present on the same side as or the opposite side of the injection; it is sometimes bilateral, affecting both upper extremities.

(ii) Weakness is required before the diagnosis can be made. Motor, sensory, and reflex findings on physical examination and the results of nerve conduction and electromyographic studies must be consistent in confirming that dysfunction is attributable to the brachial plexus. The condition should thereby be distinguishable from conditions that may give rise to dysfunction of nerve roots (i.e., radiculopathies) and peripheral nerves (i.e., including multiple monoeuropathies), as well as other peripheral and central nervous system structures (e.g., cranial neuropathies and myelopathies).

(8) *Thrombocytopenic purpura.* This term is defined by a serum platelet count less than 50,000/mm^3. Thrombocytopenic purpura does not include cases of thrombocytopenia associated with other causes such as hypersplenism, autoimmune disorders (including alloantibodies from previous transfusions) myelodysplasias, lymphoproliferative disorders, congenital thrombocytopenia or hemolytic uremic syndrome. This does not include cases of immune (formerly called idiopathic) thrombocytopenic purpura (ITP) that are mediated, for example, by viral or fungal infections, toxins or drugs. Thrombocytopenic purpura does not include cases of thrombocytopenia associated with disseminated intravascular coagulation, as observed with bacterial and viral infections. Viral infections include, for example, those infections secondary to Epstein Barr virus, cytomegalovirus, hepatitis A and B, rhinovirus, human immunodeficiency virus (HIV), adenovirus, and

dengue virus. An antecedent viral infection may be demonstrated by clinical signs and symptoms and need not be confirmed by culture or serologic testing. Bone marrow examination, if performed, must reveal a normal or an increased number of megakaryocytes in an otherwise normal marrow.

(9) *Vaccine-strain measles viral infection.* This term is defined as a disease caused by the vaccine-strain that should be determined by vaccine-specific monoclonal antibody or polymerase chain reaction tests.

(10) *Vaccine-strain polio viral infection.* This term is defined as a disease caused by poliovirus that is isolated from the affected tissue and should be determined to be the vaccine-strain by oligonucleotide or polymerase chain reaction. Isolation of poliovirus from the stool is not sufficient to establish a tissue specific infection or disease caused by vaccine-strain poliovirus.

(11) *Early-onset Hib disease.* This term is defined as invasive bacterial illness associated with the presence of Hib organism on culture of normally sterile body fluids or tissue, or clinical findings consistent with the diagnosis of epiglottitis. Hib pneumonia qualifies as invasive Hib disease when radiographic findings consistent with the diagnosis of pneumonitis are accompanied by a blood culture positive for the Hib organism. Otitis media, in the absence of the above findings, does not qualify as invasive bacterial disease. A child is considered to have suffered this injury only if the vaccine was the first Hib immunization received by the child.

(c) *Coverage provisions.* (1) Except as provided in paragraph (c)(2), (3) or (4) of this section, the revised Table of Injuries set forth in paragraph (a) of this section and the Qualifications and Aids to Interpretation set forth in paragraph (b) of this section apply to petitions for compensation under the Program filed with the United States Court of Federal Claims on or after March 24, 1997. Petitions for compensation filed before such date shall be governed by section 2114(a) and (b) of the Public Health Service Act as in effect on January 1, 1995, or by § 100.3 as in effect on March 10, 1995 (see 60 FR 7678, *et seq.*, February 8, 1995), as applicable.

(2) Hepatitis B, Hib, and varicella vaccines (Items VIII, IX, X, and XI of the Table) are included in the Table as of August 6, 1997.

(3) Rotavirus vaccines (Item XII of the Table) are included in the Table as of October 22, 1998.

(4) Other new vaccines (Item XIII of the Table) will be included in the Table as of the effective date of a tax enacted to provide funds for compensation paid with respect to such vaccines. An amendment to this section will be published in the FEDERAL REGISTER to announce the effective date of such a tax.

[60 FR 7694, Feb. 8, 1995, as amended at 62 FR 7688, Feb. 20, 1997; 62 FR 10626, Mar. 7, 1997; 63 FR 25778, May 11, 1998; 64 FR 40518, July 27, 1999]

PART 110 [RESERVED]

SUBCHAPTER K—HEALTH RESOURCES DEVELOPMENT

PART 121—ORGAN PROCUREMENT AND TRANSPLANTATION NETWORK

Sec.
121.1 Applicability.
121.2 Definitions.
121.3 The OPTN.
121.4 OPTN Policies; Secretarial review and appeals.
121.5 Listing requirements.
121.6 Organ procurement.
121.7 Identification of organ recipient.
121.8 Allocation of organs.
121.9 Designated transplant program requirements.
121.10 Reviews, evaluation, and enforcement.
121.11 Record maintenance and reporting requirements.
121.12 Preemption.

AUTHORITY: Sections 215, 371–376 of the Public Health Service Act (42 U.S.C. 216, 273–274d); Sections 1102, 1106, 1138 and 1872 of the Social Security Act (42 U.S.C. 1302, 1306, 1320b–8 and 1395ii).

SOURCE: 63 FR 16332, Apr. 2, 1998, unless otherwise noted.

§ 121.1 Applicability.

(a) The provisions of this part apply to the operation of the Organ Procurement and Transplantation Network (OPTN) and to the Scientific Registry.

(b) In accordance with Section 1138 of the Social Security Act, hospitals in which organ transplants are performed and which participate in the programs under titles XVIII or XIX of that Act, and organ procurement organizations designated under Section 1138(b)(1)(F) of the Social Security Act, are subject to the requirements of this part.

§ 121.2 Definitions.

As used in this part—

Act means the Public Health Service Act, as amended.

Designated transplant program means a transplant program that has been found to meet the requirements of § 121.9.

Family member means a family member of a transplant candidate, transplant recipient, or organ donor.

National list means the OPTN computer-based list of transplant candidates nationwide.

OPTN computer match program means a set of computer-based instructions which compares data on a cadaveric organ donor with data on transplant candidates on the national list and ranks the candidates according to OPTN policies to determine the priority for allocating the donor organ(s).

Organ means a human kidney, liver, heart, lung, or pancreas, and for purposes of the Scientific Registry, the term also includes bone marrow.

Organ donor means a human being who is the source of an organ for transplantation into another human being.

Organ procurement organization or *OPO* means an entity so designated by the Secretary under Section 1138(b) of the Social Security Act.

Organ procurement and transplantation network or *OPTN* means the network established pursuant to Section 372 of the Act.

Potential transplant recipient or *potential recipient* means a transplant candidate who has been ranked by the OPTN computer match program as the person to whom an organ from a specific cadaveric organ donor is to be offered.

Scientific Registry means the registry of information on transplant recipients established pursuant to Section 373 of the Act.

Secretary means the Secretary of Health and Human Services and any official of the Department of Health and Human Services to whom the authority involved has been delegated.

Transplant candidate means an individual who has been identified as medically suited to benefit from an organ transplant and has been placed on the national list by the individual's transplant program.

Transplant hospital means a hospital in which organ transplants are performed.

Transplant physician means a physician who provides non-surgical care and treatment to transplant patients before and after transplant.

Transplant program means a component within a transplant hospital which provides transplantation of a particular type of organ.

Transplant recipient means a person who has received an organ transplant.

Transplant surgeon means a physician who provides surgical care and treatment to transplant recipients.

§ 121.3 The OPTN.

(a) *Composition of the Board.* (1) The OPTN shall establish a Board of Directors of whatever size the OPTN determines appropriate, provided that it includes at least the following members:

(i) Six members representing the following categories (two members from each category):

(A) Transplant coordinators;

(B) Organ procurement organizations;

(C) Histocompatibility experts;

(ii) Eight individuals representing transplant candidates, transplant recipients, organ donors, and family members;

(iii) Ten members from the following categories (two members each):

(A) Transplant surgeons;

(B) Transplant physicians;

(C) Transplant hospitals;

(D) Voluntary health associations; and

(E) Other experts from related fields including medical examiners, hospital administration, or donor hospital personnel in such fields as trauma, emergency medical services, critical care, neurology, or neurosurgery; and

(iv) Six members from the general public from fields such as behavioral science, computer science, economics, ethics, health care financing, law, policy analysis, sociology, statistics, or theology. These members need not have technical expertise in organ donation or allocation.

(2) None of the members who are transplant recipients, transplant candidates, organ donors, family members, or general public members under paragraph (a)(1) of this section shall be employees of, or have a similar relationship with, the categories of members listed in paragraph (a)(1)(i) or paragraph (a)(1)(iii) or the OPTN.

(3) The Board of Directors shall include:

(i) Individuals representing the diversity of the population of transplant candidates and recipients served by the OPTN, including, to the extent practicable, minority and gender representation reflecting the population of potential transplant candidates served by the OPTN;

(ii) No more than 50 percent transplant surgeons or transplant physicians; and

(iii) At least 25 percent transplant candidates, transplant recipients, organ donors and family members.

(4) Individuals on the Board shall be elected for a two-year term.

(b) *Duties of the OPTN Board of Directors*—(1) *Executive Committee.* The Board of Directors shall elect an Executive Committee from the membership of the Board. The Executive Committee shall include at least one member who is a transplant candidate, transplant recipient, organ donor, or family member; one general public member, one OPO representative, and not more than 50 percent transplant surgeons and transplant physicians.

(2) *Executive Director.* The Board of Directors shall appoint an Executive Director of the OPTN. The Executive Director may be reappointed upon the Board's determination that the responsibilities of this position have been accomplished successfully.

(3) *Committees.* The Board of Directors shall establish such other committees as are necessary to perform the duties of the OPTN. Committees established by the Board of Directors shall include:

(i) Representation by transplant coordinators, organ procurement organizations, and transplant hospitals, and at least one transplant candidate, transplant recipient, organ donor or family member; and

(ii) To the extent practicable, minority and gender representation reflecting the diversity of the population of potential transplant candidates served by the OPTN.

(4) The Board of Directors shall develop and propose policies for the equitable allocation of organs, as described in § 121.8.

(c) *Membership of the OPTN.* (1) The OPTN shall admit and retain as members the following:

(i) All organ procurement organizations;

(ii) Transplant hospitals participating in the Medicare or Medicaid programs; and

(iii) Other organizations, institutions, and individuals that have an interest in the fields of organ donation or transplantation.

(2) To apply for membership in the OPTN:

(i) An OPO shall provide to the OPTN the name and address of the OPO, and the latest year of designation under section 1138(b) of the Social Security Act;

(ii) A transplant hospital shall provide to the OPTN the name and address of the hospital, a list of its transplant programs by type of organ; and

(iii) Any other organization, institution, or individual eligible under paragraph (c)(1)(iii) of this section shall demonstrate to the OPTN an interest in the fields of organ donation or transplantation.

(3) The OPTN shall accept or reject as members entities or individuals described in paragraph (c)(1)(iii) of this section within 90 days.

(4) Applicants rejected for membership in the OPTN may appeal to the Secretary. Appeals shall be submitted in writing within 30 days of rejection of the application. The Secretary may:

(i) Deny the appeal; or

(ii) Direct the OPTN to take action consistent with the Secretary's response to the appeal.

(d) *Corporate Status of the OPTN.* (1) The OPTN shall be a private, not-for-profit entity.

(2) The requirements of this section do not apply to any parent, sponsoring, or affiliated organization of the OPTN, or to any activities of the contracting organization that are not integral to the operation of the OPTN. Such an organization is free to establish its own corporate procedures.

(3) No OPTN member is required to become a member of any organization that is a parent, sponsor, contractor, or affiliated organization of the OPTN, to comply with the by-laws of any such organization, or to assume any corporate duties or obligations of any such organization.

(e) *Effective date.* The organization designated by the Secretary as the OPTN shall have six months from October 1, 1998, or six months from its initial designation as the OPTN, whichever is later, to meet the board composition requirements of paragraph (a) of this section. The organization designated by the Secretary as the OPTN shall have six months from October 1, 1998, or six months from initial designation as the OPTN, whichever is later, to meet any other requirements of this section, except that the Secretary may extend such period for good cause.

[63 FR 16332, Apr. 2, 1998, as amended at 63 FR 35847, July 1, 1998]

§ 121.4 OPTN policies: Secretarial review and appeals.

(a) The OPTN Board of Directors shall be responsible for developing, with the advice of the OPTN membership and other interested parties, policies within the mission of the OPTN as set forth in section 372 of the Act and the Secretary's contract for the operation of the OPTN, including:

(1) Policies for the equitable allocation of cadaveric organs in accordance with § 121.8;

(2) Policies, consistent with recommendations of the Centers for Disease Control and Prevention, for the testing of organ donors and follow-up of transplant recipients to prevent the spread of infectious diseases;

(3) Policies that reduce inequities resulting from socioeconomic status, including, but not limited to:

(i) Ensuring that patients in need of a transplant are listed without regard to ability to pay or source of payment;

(ii) Procedures for transplant hospitals to make reasonable efforts to make available from their own resources, or obtain from other sources, financial resources for patients unable to pay such that these patients have an opportunity to obtain a transplant and necessary follow-up care;

(iii) Recommendations to private and public payers and service providers on ways to improve coverage of organ transplantation and necessary follow-up care; and

(iv) Reform of allocation policies based on assessment of their cumulative effect on socioeconomic inequities;

(4) Policies regarding the training and experience of transplant surgeons

and transplant physicians in designated transplant programs as required by § 121.9;

(5) Policies for nominating officers and members of the Board of Directors; and

(6) Policies on such other matters as the Secretary directs.

(b) The Board of Directors shall:

(1) Provide opportunity for the OPTN membership and other interested parties to comment on proposed policies and shall take into account the comments received in developing and adopting policies for implementation by the OPTN; and

(2) Provide, at least 30 days prior to their proposed implementation, proposed policies to the Secretary, who may provide comments and/or objections within a reasonable time, or may publish the policies in the FEDERAL REGISTER to obtain comments from the public. The Board of Directors shall indicate which of the proposed policies it recommends be enforceable under § 121.10. If the Secretary seeks public comments, these comments will be considered and may affect subsequent response to the OPTN. The OPTN shall take into account any comments the Secretary may provide. If the Secretary objects to a policy, the OPTN may be directed to revise the policy consistent with the Secretary's direction. If the OPTN does not revise the policy in a timely manner or if the Secretary otherwise disagrees with its content, the Secretary may take such other action as the Secretary determines appropriate.

(c) The OPTN Board of Directors shall provide the membership and the Secretary with copies of the policies as they are adopted, and make them available to the public upon request. The Secretary will publish lists of these documents in the FEDERAL REGISTER, indicating which ones are subject to the special compliance requirements and potential sanctions of section 1138 of the Social Security Act. The OPTN shall also continuously maintain OPTN policies for public access on the Internet, including current and proposed policies.

(d) The OPTN, or its members, or other individuals, or entities objecting to policies developed by the OPTN or the Secretary may submit appeals to the Secretary in writing. Any such appeal shall include a statement of the basis for the appeal. The Secretary will seek the comments of the OPTN on the issues raised in the appeal of an OPTN-developed policy. Policies remain in effect during the appeal. The Secretary may:

(1) Deny the appeal;

(2) Direct the OPTN to revise the policies consistent with the Secretary's response to the appeal, or

(3) Take such other action as the Secretary determines appropriate.

(e) The OPTN shall implement policies and:

(1) Provide information to OPTN members about these policies and the rationale for them.

(2) Update policies developed in accordance with this section to accommodate scientific and technological advances.

§ 121.5 Listing requirements.

(a) A transplant hospital which is an OPTN member may list individuals only for a designated transplant program.

(b) Transplant hospitals shall assure that individuals are placed on the national list as soon as they are determined to be candidates for transplantation. The OPTN shall advise transplant hospitals of the information needed for such listing.

(c) An OPTN member shall pay a registration fee to the OPTN for each transplant candidate it places on the national list. The amount of such fee shall be determined by the OPTN with the approval of the Secretary. No less often than annually, and whether or not a change is proposed, the OPTN shall submit to the Secretary a statement of its proposed registration fee, together with such supporting information as the Secretary finds necessary to determine the reasonableness or adequacy of the fee schedule and projected revenues. This submission is due at least three months before the beginning of the OPTN's fiscal year. The Secretary will approve, modify, or disapprove the amount of the fee within a reasonable time of receiving the OPTN's submission.

§ 121.6 Organ procurement.

The suitability of organs donated for transplantation shall be determined as follows:

(a) *Tests.* An OPTN member procuring an organ shall assure that laboratory tests and clinical examinations of potential organ donors are performed to determine any contraindications for donor acceptance, in accordance with policies established by the OPTN.

(b) *HIV.* Organs from individuals known to be infected with human immunodeficiency virus shall not be procured for transplantation.

(c) *Acceptance criteria.* Transplant programs shall establish criteria for organ acceptance, and shall provide such criteria to the OPTN and the OPOs with which they are affiliated.

§ 121.7 Identification of organ recipient.

(a) *List of potential transplant recipients.* (1) An OPTN member procuring an organ shall operate the OPTN computer match program within such time as the OPTN may prescribe to identify and rank potential recipients for each cadaveric organ procured.

(2) The rank order of potential recipients shall be determined for each cadaveric organ using the organ specific allocation criteria established in accordance with § 121.8.

(3) When a donor or donor organ does not meet a transplant program's donor acceptance criteria, as established under § 121.6(c), transplant candidates of that program shall not be ranked among potential recipients of that organ and shall not appear on a roster of potential recipients of that organ.

(b) *Offer of organ for potential recipients.* (1) Organs shall be offered for potential recipients in accordance with policies developed under § 121.8 and implemented under § 121.4.

(2) Organs may be offered only to potential recipients listed with transplant programs having designated transplant programs of the same type as the organ procured.

(3) An organ offer is made when all information necessary to determine whether to transplant the organ into the potential recipient has been given to the transplant hospital.

(4) A transplant program shall either accept or refuse the offered organ for the designated potential recipient within such time as the OPTN may prescribe. A transplant program shall document and provide to the OPO and to the OPTN the reasons for refusal and shall maintain this document for one year.

(c) *Transportation of organ to potential recipient*—(1) *Transportation.* The OPTN member that procures a donated organ shall arrange for transportation of the organ to the transplant hospital.

(2) *Documentation.* The OPTN member that is transporting an organ shall assure that it is accompanied by written documentation of activities conducted to determine the suitability of the organ donor and shall maintain this document for one year.

(3) *Packaging.* The OPTN member that is transporting an organ shall assure that it is packaged in a manner that is designed to maintain the viability of the organ.

(d) *Receipt of an organ.* Upon receipt of an organ, the transplant hospital responsible for the potential recipient's care shall determine whether to proceed with the transplant. In the event that an organ is not transplanted into the potential recipient, the OPO which has a written agreement with the transplant hospital must offer the organ for another potential recipient in accordance with paragraph (b) of this section.

(e) *Wastage.* Nothing in this section shall prohibit a transplant program from transplanting an organ into any medically suitable candidate if to do otherwise would result in the organ not being used for transplantation. The transplant program shall notify the OPTN and the OPO which made the organ offer of the circumstances justifying each such action within such time as the OPTN may prescribe.

§ 121.8 Allocation of organs.

(a) *Policy development.* The Board of Directors established under § 121.3 shall develop, in accordance with the policy development process under § 121.4, organ-specific policies (including combinations of organs, such as for heart-

lung transplants) for the equitable allocation of cadaveric organs among potential recipients. Such policies shall meet the requirements in paragraphs (a)(1), (2), (3), (4) and (5) of this section. Such policies shall be reviewed periodically and revised as appropriate.

(1) Minimum listing criteria for including transplant candidates on the national list shall be standardized and, to the extent possible, shall contain explicit thresholds for listing a patient and be expressed through objective and measurable medical criteria.

(2) Transplant candidates shall be grouped by status categories ordered from most to least medically urgent, with a sufficient number of categories to avoid grouping together persons with substantially different medical urgency. Criteria for status designations shall contain explicit thresholds for differentiating among patients and shall be expressed, to the extent possible, through objective and measurable medical criteria.

(3) Organ allocation policies and procedures shall be in accordance with sound medical judgment and shall be designed and implemented:

(i) To allocate organs among transplant candidates in order of decreasing medical urgency status, with waiting time in status used to break ties within status groups. Neither place of residence nor place of listing shall be a major determinant of access to a transplant. For each status category, inter-transplant program variance in the performance indicator ''waiting time in status'' shall be as small as can reasonably be achieved, consistent with paragraph (a)(3)(ii) of this section. Priority shall be given to reducing the waiting time variance in the most medically urgent status categories before reducing the waiting time variance in less urgent status categories, if equivalent reductions cannot be achieved in all status categories; and

(ii) To avoid futile transplantation, to avoid wasting organs, and to promote efficient management of organ placement.

(4) The OPTN shall:

(i) Develop mechanisms to promote and review compliance with each of these goals;

(ii) Develop performance indicators to facilitate assessment of how well current and proposed policies will accomplish these goals;

(iii) Use performance indicators, including indicators described in paragraph (a)(4)(iv) of this section, to establish baseline data on how closely the results of current policies approach these goals and to establish the projected amount of improvement to result from proposed policies; and

(iv) Timely report data to the Secretary on performance by organ and status category, including program-specific data, OPO specific data, data by program size, and data aggregated by organ procurement area, OPTN region, the nation as a whole, and such other geographic areas as the Secretary may designate. Such data shall include inter-transplant program variation in waiting time in status, total life years pre- and post-transplant, patient and graft survival rates following transplantation, patients mis-classified by status, and number of patients who die waiting for a transplant. Such data shall cover such intervals of time, and be presented using confidence intervals or other measures of variance, as appropriate to avoid spurious results or erroneous interpretation due to small numbers of patients covered.

(5) *Transition*—(i) *General.* When the OPTN revises organ allocation policies under this section, it shall consider whether to adopt transition procedures that would treat people on the national list and awaiting transplantation prior to the adoption or effective date of the revised policies no less favorably than they would have been treated under the previous policies. The transition procedures shall be transmitted to the Secretary for review together with the revised allocation policies.

(ii) *Special rule for initial revision of liver allocation policies.* When the OPTN transmits to the Secretary its initial revision of the liver allocation policies, as directed by paragraph (c)(2) of this section, it shall include transition procedures that, to the extent feasible, treat each individual on the national list and awaiting transplantation on April 2, 1998 no less favorably than he or she would have been treated had the

revised liver allocation policies not become effective. These transition procedures may be limited in duration or applied only to individuals with greater than average medical urgency if this would significantly improve administration of the list or if such limitations would be applied only after accommodating a substantial preponderance of those disadvantaged by the change in the policies.

(b) *Secretarial review of policies and performance Indicators.* The OPTN's transmittal to the Secretary of proposed allocation policies and performance indicators shall include such supporting material, including the results of model-based computer simulations, as the Secretary may require to assess the likely effects of policy changes and as are necessary to demonstrate that the proposed policies comply with the performance indicators and transition procedures of paragraph (a) of this section.

(c) *Deadlines for initial reviews.* (1) The OPTN shall conduct an initial review of existing allocation policies and, except as provided in paragraph (c)(2) of this section, no later than October 1, 1999 transmit initial revised policies to meet the requirements of § 121.8 (a), together with supporting documentation to the Secretary for review in accordance with § 121.4.

(2) No later than November 30, 1998 the OPTN shall transmit revised policies and supporting documentation for liver allocation to meet the requirements of § 121.8 (a) to the Secretary for review in accordance with § 121.4. The OPTN may transmit these materials without seeking further public comment under § 121.4(b) or (c).

(d) *Variances.* The OPTN may develop experimental policies that test methods of improving allocation. All such experimental policies shall be accompanied by a research design and include data collection and analysis plans. Such variances shall be time limited. Entities or individuals objecting to variances may appeal to the Secretary under the procedures of § 121.4.

(e) *Directed donation.* Nothing in this section shall prohibit the allocation of an organ to a recipient named by those authorized to make the donation.

[63 FR 16332, Apr. 2, 1998, as amended at 63 FR 35847, July 1, 1998]

§ 121.9 Designated transplant program requirements.

(a) To receive organs for transplantation, a transplant program in a hospital that is a member of the OPTN shall abide by these rules and shall:

(1) Be a transplant program approved by the Secretary for reimbursement under Medicare and Medicaid; or

(2) Be an organ transplant program which has adequate resources to provide transplant services to its patients and agrees promptly to notify the OPTN and patients awaiting transplants if it becomes inactive and which:

(i) Has letters of agreement or contracts with an OPO;

(ii) Has on site a transplant surgeon qualified in accordance with policies developed under § 121.4;

(iii) Has on site a transplant physician qualified in accordance with policies developed under § 121.4;

(iv) Has available operating and recovery room resources, intensive care resources and surgical beds and transplant program personnel;

(v) Shows evidence of collaborative involvement with experts in the fields of radiology, infectious disease, pathology, immunology, anesthesiology, physical therapy and rehabilitation medicine, histocompatibility, and immunogenetics and, as appropriate, hepatology, pediatrics, nephrology with dialysis capability, and pulmonary medicine with respiratory therapy support;

(vi) Has immediate access to microbiology, clinical chemistry, histocompatibility testing, radiology and blood banking services, as well as the capacity to monitor treatment with immunosuppressive drugs; and

(vii) Makes available psychiatric and social support services for transplant candidates, transplant recipients and their families; or

(3) Be a transplant program in a Department of Veterans Affairs hospital which is a Dean's Committee hospital which shares a common university-based transplant team of a transplant

program which meets the requirements of § 121.9(a) (1) or (2).

(b) To apply to be a designated transplant program, transplant programs shall provide to the OPTN such documents as the OPTN may require which show that they meet the requirements of § 121.9(a) (1), (2), or (3).

(c) The OPTN shall, within 90 days, accept or reject applications to be a designated transplant program.

(d) Applicants rejected for designation may appeal to the Secretary. Appeals shall be submitted in writing within 30 days of rejection of the application. The Secretary may:

(1) Deny the appeal; or

(2) Direct the OPTN to take action consistent with the Secretary's response to the appeal.

§ 121.10 Reviews, evaluation, and enforcement.

(a) *Review and evaluation by the Secretary.* The Secretary or her/his designee may perform any reviews and evaluations of member OPOs and transplant programs which the Secretary deems necessary to carry out her/his responsibilities under the Public Health Service Act and the Social Security Act.

(b) *Review and evaluation by the OPTN.* (1) The OPTN shall design appropriate plans and procedures, including survey instruments, a peer review process, and data systems, for purposes of:

(i) Reviewing applications submitted under § 121.3(c) for membership in the OPTN;

(ii) Reviewing applications submitted under § 121.9(b) to be a designated transplant program; and

(iii) Conducting ongoing and periodic reviews and evaluations of each member OPO and transplant hospital for compliance with these rules and OPTN policies.

(2) Upon the approval of the Secretary, the OPTN shall furnish review plans and procedures, including survey instruments and a description of data systems, to each member OPO and transplant hospital. The OPTN shall furnish any revisions of these documents to member OPOs and hospitals, after approval by the Secretary, prior to their implementation.

(3) At the request of the Secretary, the OPTN shall conduct special reviews of OPOs and transplant programs, where the Secretary has reason to believe that such entities may not be in compliance with these rules or OPTN policies or may be acting in a manner which poses a risk to the health of patients or to public safety. The OPTN shall conduct these reviews in accordance with such schedules as the Secretary specifies and shall make periodic reports to the Secretary of progress on such reviews and on other reviews conducted under the requirements of this paragraph.

(4) The OPTN shall notify the Secretary in a manner prescribed by the Secretary within 3 days of all committee and Board of Directors meetings in which transplant hospital and OPO compliance with these regulations or OPTN policies is considered.

(c) *Enforcement of OPTN rules*—(1) *OPTN recommendations.* The Board of Directors shall advise the Secretary of the results of any reviews and evaluations conducted under paragraph (b)(1)(iii) or paragraph (b)(3) of this section which, in the opinion of the Board, indicate noncompliance with these rules or OPTN policies, or indicate a risk to the health of patients or to the public safety, and shall provide any recommendations for appropriate action by the Secretary. Appropriate action may include removal of designation as a transplant program under § 121.9, termination of a transplant hospital's participation in Medicare or Medicaid, termination of a transplant hospital's reimbursement under Medicare and Medicaid, or termination of an OPO's reimbursement under Medicare and Medicaid, if the noncompliance is with a policy designated by the Secretary as covered by section 1138 of the Social Security Act.

(2) *Secretary's action on recommendations.* Upon the Secretary's review of the Board of Directors' recommendations, the Secretary may:

(i) Request further information from the Board of Directors or the alleged violator, or both;

(ii) Decline to accept the recommendation;

(iii) Accept the recommendation, and notify the alleged violator of the Secretary's decision; or

(iv) Take such other action as the Secretary deems necessary.

§ 121.11 Record maintenance and reporting requirements.

(a) *Record maintenance.* Records shall be maintained and made available subject to OPTN policies and applicable limitations based on personal privacy as follows:

(1) The OPTN and the Scientific Registry, as appropriate, shall:

(i) Maintain and operate an automated system for managing information about transplant candidates, transplant recipients, and organ donors, including a computerized national list of individuals waiting for transplants;

(ii) Maintain records of all transplant candidates, all organ donors and all transplant recipients;

(iii) Operate, maintain, receive, publish, and transmit such records and information electronically, to the extent feasible, except when hard copy is requested; and

(iv) In making information available, provide manuals, forms, flow charts, operating instructions, or other explanatory materials as necessary to understand, interpret, and use the information accurately and efficiently.

(2) *Organ procurement organizations and transplant programs*—(i) *Maintenance of records.* All OPOs and transplant programs shall maintain such records pertaining to each potential donor identified, each organ retrieved, each recipient transplanted and such other transplantation-related matters as the Secretary deems necessary to carry out her/his responsibilities under the Act. The OPO or transplant program shall maintain these records for seven years.

(ii) *Access to facilities and records.* OPOs and transplant hospitals shall permit the Secretary and the Comptroller General, or their designees, to inspect facilities and records pertaining to any aspect of services performed related to organ donation and transplantation.

(b) *Reporting requirements.* (1) The OPTN and the Scientific Registry, as appropriate, shall:

(i) In addition to special reports which the Secretary may require, submit to the Secretary a report not less than once every fiscal year on a schedule prescribed by the Secretary. The report shall include the following information in a form prescribed by the Secretary:

(A) Information that the Secretary prescribes as necessary to assess the effectiveness of the Nation's organ donation, procurement and transplantation system;

(B) Information that the Secretary deems necessary for the report to Congress required by Section 376 of the Act; and,

(C) Any other information that the Secretary prescribes.

(ii) Provide to the Scientific Registry data on transplant candidates and recipients, and other information that the Secretary deems appropriate. The information shall be provided in the form and on the schedule prescribed by the Secretary;

(iii) Provide to the Secretary any data that the Secretary requests;

(iv) Make available to the public timely and accurate program-specific information on the performance of transplant programs. This shall include free dissemination over the Internet, and shall be presented, explained, and organized as necessary to understand, interpret, and use the information accurately and efficiently. These data shall be updated no less frequently than every six months and shall include three month, one year, three year and five year graft and patient survival rates, both actual and statistically expected, and shall be presented no more than six months later than the period to which they apply. Data presented shall include confidence intervals or other measures that provide information on the extent to which chance may influence transplant program-specific results. Such data shall also include such other cost or performance information as the Secretary may specify, including but not limited to transplant program-specific information on waiting time within medical status, organ wastage, and refusal of

organ offers. These data shall also be presented no more than six months later than the period to which they apply;

(v) Respond to reasonable requests from the public for data needed for bona fide research or analysis purposes, to the extent that the OPTN's or Scientific Registry's resources permit, or as directed by the Secretary. The OPTN or the Scientific Registry may impose reasonable charges for the separable costs of responding to such requests. Patient-identified data may be made available to bona fide researchers upon a showing that the research design requires such data for matching or other purposes, and that appropriate confidentiality protections, including destruction of patient identifiers upon completion of matching, will be followed. All requests shall be processed expeditiously, with data normally made available within 30 days from the date of request;

(vi) Respond to reasonable requests from the public for data needed to assess the performance of the OPTN or Scientific Registry, to assess individual transplant programs, or for other purposes. The OPTN or Scientific Registry may impose charges for the separable costs of responding to such requests. An estimate of such charges shall be provided to the requester before processing the request. All requests should be processed expeditiously, with data normally made available within 30 days from the date of request; and

(vii) Provide data to an OPTN member, without charge, that has been assembled, stored, or transformed from data originally supplied by that member.

(2) An organ procurement organization or transplant hospital shall, as specified from time to time by the Secretary, submit to the OPTN, to the Scientific Registry, as appropriate, and to the Secretary information regarding transplantation candidates, transplant recipients, donors of organs, transplant program performance, and other information that the Secretary deems appropriate. Such information shall be in the form required and shall be submitted in accordance with the schedule prescribed. No restrictions on subsequent redisclosure may be imposed by any organ procurement organization or transplant hospital.

(c) *Public access to data.* The Secretary may release to the public information collected under this section when the Secretary determines that the public interest will be served by such release. The information which may be released includes, but is not limited to, information on the comparative costs and patient outcomes at each transplant program affiliated with the OPTN, transplant program personnel, information regarding instances in which transplant programs refuse offers of organs to their patients, information regarding characteristics of individual transplant programs, information regarding waiting time at individual transplant programs, and such other data as the Secretary determines will provide information to patients, their families, and their physicians that will assist them in making decisions regarding transplantation.

§ 121.12 Preemption.

No State or local governing entity shall establish or continue in effect any law, rule, regulation, or other requirement that would restrict in any way the ability of any transplant hospital, OPO, or other party to comply with organ allocation policies of the OPTN or other policies of the OPTN that have been approved by the Secretary under this part.

PART 124—MEDICAL FACILITY CONSTRUCTION AND MODERNIZATION

Subpart A—Project Grants for Public Medical Facility Construction and Modernization

Sec.

124.1 Applicability.
124.2 Definitions.
124.3 Eligibility.
124.4 Application.
124.5 Grant evaluation and award.
124.6 Grant payments.
124.7 Use of grant funds.
124.8 Grantee accountability.
124.9 Nondiscrimination.
124.10 Additional conditions.
124.11 Applicability of 45 CFR part 74.

Subparts B–E [Reserved]

Subpart F—Reasonable Volume of Uncompensated Services to Persons Unable to Pay

124.501 Applicability.
124.502 Definitions.
124.503 Compliance level.
124.504 Notice of availability of uncompensated services.
124.505 Eligibility criteria.
124.506 Allocation of services; plan requirement.
124.507 Written determinations of eligibility.
124.508 Cessation of uncompensated services.
124.509 Reporting requirements.
124.510 Record maintenance requirements.
124.511 Investigation and determination of compliance.
124.512 Enforcement.
124.513 Public facility compliance alternative.
124.514 Compliance alternative for facilities with small annual obligations.
124.515 Compliance alternative for community health centers, migrant health centers and certain National Health Service Corps sites.
124.516 Charitable facility compliance alternative.
124.517 Agreements with State agencies.

Subpart G—Community Service

124.601 Applicability.
124.602 Definitions.
124.603 Provision of services.
124.604 Posted notice.
124.605 Reporting and record maintenance requirements.
124.606 Investigation and enforcement.
124.607 Agreements with State agencies.
APPENDIX TO SUBPART G—INTERIM PROCEDURES AND CRITERIA FOR REVIEW BY HEALTH SYSTEMS AGENCIES OF APPLICATIONS UNDER SECTION 1625 OF THE PUBLIC HEALTH SERVICE ACT

Subpart H—Recovery of Grant Funds

124.701 Applicability.
124.702 Definitions.
124.703 Federal right of recovery.
124.704 Notification of sale, transfer, or change of use.
124.705 Amount of recovery.
124.706 Calculation of interest.
124.707 Waiver of recovery where facility is sold or transferred to a proprietary entity.
124.708 Waiver of recovery—good cause for other use of facility.
124.709 Withdrawal of waiver.

AUTHORITY: Secs. 215, 1602, 1625, Public Health Service Act (42 U.S.C. 216, 300o–1, 300r), unless otherwise noted.

SOURCE: 42 FR 62270, Dec. 9, 1977, unless otherwise noted.

Subpart A—Project Grants for Public Medical Facility Construction and Modernization

§ 124.1 Applicability.

The regulations of this subpart are applicable to grants under section 1625 of the Public Health Service Act for construction and modernization projects designed to:

(a) Eliminate or prevent imminent safety hazards as defined by Federal, State or local fire, building, or life safety codes or regulations, or

(b) Avoid noncompliance with State or voluntary licensure or accreditation standards.

§ 124.2 Definitions.

As used in this subpart:

(a) *Act* means the Public Health Service Act, as amended.

(b) *Construction* means construction of new buildings and initial equipment of such buildings and, in any case in which it will help to provide a service not previously provided in the community, equipment of any buildings. It includes architect's fees, but excludes the cost of off-site improvements and, except with respect to public health centers, the cost of the acquistion of land.

(c) *Cost* means the amount found by the Secretary to be necessary for construction or modernization under a project, except that such term does not include any amount found by the Secretary to be attributable to expansion of the bed capacity of any facility.

(d) *Equipment* means those items which are necessary for the functioning of the facility but does not include items of current operating expense such as food, fuel, pharmaceuticals, dressings, paper, printed forms, and housekeeping supplies.

(e) *Facility for long-term care* means a facility (including a skilled nursing care or intermediate care facility), providing inpatient care for convalescent or chronic disease patients who require skilled nursing or intermediate care and related medical services:

(1) Which is a hospital (other than a hospital primarily for the care and treatment of mentally ill or tuberculosis patients) or is operated in connection with a hospital, or

(2) In which such care and medical services are prescribed by, or are performed under the general direction of, persons licensed to practice medicine or surgery in the State.

(f) *Health systems agency* means an agency which has been conditionally or fully designated pursuant to section 1515 of the Act and 42 CFR part 122.

(g) *Hospital* includes general, tuberculosis, and other types of hospitals, and related facilities such as laboratories, outpatient departments, nurses' home facilities, extended care facilities, facilities related to programs for home health services, self-care units, and central service facilities, operated in connection with hospitals, and education or training facilities for health professional personnel operated as an integral part of a hospital, but does not include any facility furnishing primarily domiciliary care.

(h) *Major repair* means those repairs to an existing building, excluding routine maintenance, which restore the building to a sound state, the cost of which is a least 10 percent of plant value or $200,000, whichever is greater. *Plant value* means the historic book value of the building at the time of application for assistance under this subpart.

(i) *Medical facility* means a hospital, public health center, outpatient medical facility, rehabilitation facility, or a facility for long-term care.

(j) *Modernization* means the alteration, expansion (excluding expansion which increases bed capacity), major repair, remodeling, replacement, and renovation of existing buildings (including initial equipment thereof), and the replacement of obsolete equipment of existing buildings, including energy conservation projects.

(k) *Outpatient medical facility* means a facility, located in or apart from a hospital, for the diagnosis or diagnosis and treatment of ambulatory patients (including ambulatory inpatients):

(1) Which is operated in connection with a hospital, or

(2) In which patient care of a specialized nature (such as in an eye clinic, dental clinic, or ambulatory surgical center) is provided under the professional supervision of persons licensed to practice medicine or surgery in the State, or in the case of dental diagnosis or treatment, under the professional supervision of persons licensed to practice dentistry in the State, or

(3) Which offers to patients not requiring hospitalization the services of licensed physicians in various medical specialties, and which provides to its patients a reasonably full range of diagnostic and treatment services.

(l) *Public health center* means a publicly owned facility for the provision of public health services, including related facilities such as laboratories, clinics, and administrative offices operated in connection with such a facility.

(m) *Quasi-public corporation* means a private, nonprofit corporation which has been formally given one or more governmental powers by a general-purpose unit of government to enable it to carry out its work.

(n) *Rehabilitation facility* means a facility which is operated for the primary purpose of assisting in the rehabilitation of disabled persons through an integrated program of medical evaluation and services, and psychological, social, or vocational evaluation and services, under competent professional supervision, and in the case of which the major portion of the required evaluation and services is furnished within the facility; and either the facility is operated in connection with a hospital, or all medical and related health services are prescribed by, or are under the general direction of persons licensed to practice medicine or surgery in the State.

(o) *Secretary* means the Secretary of Health and Human Services and any other officer or employee of the Department of Health and Human Services to whom the authority involved has been delegated.

(p) *State* means any one of the several States, the Commonwealth of Puerto Rico, Guam, American Samoa, the Trust Territory of the Pacific Islands, the Virgin Islands, and the District of Columbia.

(q) *State health planning and development agency* or *State Agency* means the agency of a State government which has been conditionally or fully designated under section 1521 of the Act and 42 CFR part 123.

(r) *Title* means a fee simple, or such other estate or interest in the project site (including a leasehold on which the rental does not exceed 4 percent of the value of the land) as the Secretary finds sufficient to assure undisturbed use and possession for the purpose of construction or modernization and operation of the project for a period of not less than twenty years.

(s) *Urban or rural poverty area* means a census tract, census county division, or minor civil division, as applicable, in which the percentage of the residents with incomes below the poverty level, as defined by the Secretary of Commerce is not less than the percentage derived in accordance with the following sentence. This percentage shall be derived so that the percentage of the total population of the United States residing in all such areas is equal to the percentage of the total population of the United States with incomes below such poverty level, plus five percent.

§ 124.3 Eligibility.

(a) *Eligible applicants.* A grant under section 1625 may only be made to a State or political subdivision of a State, including any city, town, county, borough, hospital district authority, or public or quasi-public corporation for a project described in paragraph (b) of this section for a medical facility owned, operated, or owned and operated by the State or political subdivision.

(b) *Eligible project.* A grant under section 1625 may be made only for a construction and/or modernization project designed to:

(1) Eliminate or prevent safety hazards which under Federal, State, and/or local fire, building or life safety codes or regulations, will, in the judgment of the Secretary result in one or more of the following:

(i) Loss of licensure for the facility.

(ii) Closing of all or a substantial part of the facility,

(iii) Loss of eligibility for reimbursement under title XVIII or title XIX of the Social Security Act; or

(2) Avoid noncompliance with State licensure or voluntary accreditation standards where noncompliance will, in the judgment of the Secretary, result in one or both of the following:

(i) Loss of licensure for the facility,

(ii) Loss of accreditation resulting in loss of eligibility for reimbursement under title XVIII or title XIX of the Social Security Act.

§ 124.4 Application.

An application for a grant under this subpart must be submitted directly to the Secretary at such time and in such form and manner as the Secretary may prescribe. The application must be executed by an individual authorized to act for the applicant and assume on behalf of the applicant the obligations imposed by the Act, this subpart, and the terms and conditions of the grant. The application must contain the following:

(a) A description of the site of the project.

(b) A full description, with all appropriate documentation, of:

(1) The imminent safety hazards, licensure and/or accreditation problems of the facility;

(2) The type and amount of assistance sought under this subpart;

(3) The construction of modernization project for which funds are sought, describing how it will remedy the problems described pursuant to paragraph (b)(1) of this section, with a complete schedule for the proposed construction or modernization; and

(4) How failure to remedy the problems described pursuant to paragraph (b) (1) of this section will affect the population served by the facility.

(c) In the case of a modernization project for continuation of existing health services, a finding by the State Agency of the continued need for such services. In the case of a construction or modernization project for new health services, a finding by the State Agency of the need for such services. The finding of need shall be based on the following criteria:

(1) In a State which has a program approved by the Secretary under section 1523(a)(4)(B) of the Act, a State certificate of need program, or a program under section 1122 of the Social Security Act, the State Agency shall use the criteria used in conducting reviews under such program. In a State which has more than one such program, the State Agency shall use the criteria of one of the programs and notify the Secretary of the program criteria used.

(2) In a State which does not have a program approved by the Secretary under section 1523(a)(4)(B) of the Act, a State certificate of need program or a program under section 1122 of the Social Security Act, the State Agency shall base its finding of need on the following criteria:

(i) Whether the proposed project is needed or projected as necessary to meet the needs in the community in terms of health services required; *Provided,* That projects for highly specialized services (such as open-heart surgery, renal transplantation, or radiation therapy) which will draw from patient populations outside the community in which the project is situated will receive appropriate consideration;

(ii) Whether the proposed project can be adquately staffed and operated when completed;

(iii) Whether the proposed capital expenditure is economically feasible and can be accommodated in the patient charge structure of the health facility without unreasonable increases; and

(iv) Whether the project will foster cost containment or improved quality of care through improved effciency and productivity, including promotion of cost-effective factors such as ambulatory care, preventive health care services, home health care, and design and construction economies, or through increased competition between different health services delivery systems.

(d) [Reserved]

(e) An assurance that adequate financial support will be available for completion of the project, supported by a detailed project budget satisfactory to the Secretary which includes all existing and anticipated sources of funds for the project.

(f) An assurance that adequate financial support will be available for maintenance and operation of the project when completed, supported by budgets and detailed expenditure and revenue information satisfactory to the Secretary for both the facility and the applicant for the past three fiscal years and budget and projections of expenditures and revenue for the future three fiscal years. Where a certificate of need or a favorable finding under section 1122 of the Social Security Act is required in order for the project to operate and/or receive reimbursement from governmental programs for health services provided, assurance from the applicant satisfactory to the the Secretary that the applicant will submit, consistent with the provisions of § 124.5(d), any such required certificates of need and/or section 1122 finding.

(g) An assurance that the applicant would not be able to complete the project without the grant applied for, supported by a description of all efforts to obtain funds needed to complete the project and the results of such efforts.

(h) An assurance that all times after the application is approved there will be made available in the facility or portion thereof to be constructed or modernized, a reasonable volume of services to persons unable to pay therefor. The applicant shall comply with the standards and procedures of 42 CFR 53.111, except as the Secretary may prescribe pursuant to section 1602(6) of the Act. The functions of the State Agency designated under section 604 of the Act under 42 CFR 53.111 will be performed by the Secretary, except to the extent they are otherwise assigned.

(i) An assurance that at all times after the application is approved the facility or portion thereof to be constructed or modernized will be made available to all persons residing or employed in the area served by the facility. The applicant shall comply with the standards and procedures of 42 CFR 53.113, except as the Secretary may prescribe pursuant to section 1602(6) of the Act. The functions of the State Agency designated under section 604 of the Act under 42 CFR 53.113 will be performed by the Secretary, except to the extent they are otherwise assigned.

(j) An assurance that title to the project site is or will be vested in one or more of the entities filing the application or in a public or other nonprofit entity which is to operate the facility on completion of the project, with such documentation as the Secretary may require.

(k) In the case of an application for construction or modernization of an outpatient medical facility, an assurance, supported by a written transfer agreement (or written documentation that such agreement will be obtained) with identified hospitals, that the services of a general hospital will be available to patients at such facility who are in need of hospital care.

(l) Evidence that: (1) The appropriate health systems agency has been given the opportunity to review the application in accordance with section 1513(e) of the Act and the requirements of the appendix to this subpart, with the result of any such review.

(2) The application has been reviewed in accordance with the applicable requirements of OMB Circular A–95.

(m) An analysis satisfactory to the Secretary and such other information and materials as the Secretary may require concerning the environmental impact of the proposed construction or modernization project.

(n) An assessment satisfactory to the Secretary of the project site in light of the considerations set forth in Executive Order 11296 (31 FR 10663, August 10, 1966) concerning the evaluation of flood hazards in locating Federally supported facilities.

(o) In the case of a project which involves the displacement of persons or businesses, an assurance that the applicant will comply with the applicable provisions of the Uniform Relocation Assistance and Real Property Acquisition Policies Act of 1970 (42 U.S.C. 4601 *et seq.*).

(p)(1) An assurance that all laborers and mechanics employed by contractors or subcontractors in the performance of work on a project will be paid wages at rates not less than those prevailing on similar construction in the locality as determined by the Secretary of Labor in accordance with the Act of March 3, 1931 (40 U.S.C. 276a–276a–5, known as the Davis-Bacon Act); and

(2) An assurance that the following conditions and provisions will be included in all construction contracts:

(i) The provisions of ''DHHS Requirements for Federally Assisted Construction Contracts Regarding Labor Standards and Equal Employment Opportunity,'' Form DHHS 514 (rev. July 1976) (issued by the Office of Grants and Procurement Management, U.S. Department of Health and Human Services) pertaining to the Davis-Bacon Act, the Contract Work Hours Standards Act, and the Copeland Act (Anti-Kickback) regulations except in the case of contracts in the amount of $2,000 or less; and pertaining to Executive Order 11246, September 24, 1965 (30 FR 12319), relating to nondiscrimination in construction contract employment except in the case of contracts in the amount of $10,000 or less, and

(ii) Representatives of the Secretary will have access at all reasonable times to work wherever it is in preparation or progress, and the contractor shall provide proper facilities for such access and inspection.

(q) Such other information as the Secretary may require.

[42 FR 62270, Dec. 9, 1977, as amended at 49 FR 33021, Aug. 20, 1984]

§ 124.5 Grant evaluation and award.

(a)(1) Within the limits of funds available for such purpose, the Secretary may award grants under this subpart for project costs to applicants with approvable applications therefor which will, in his judgment, best promote the purposes of section 1625 of the Act, taking into consideration:

(i) The severity and seriousness of the safety hazard, licensure or accreditation problem or problems.

(ii) The relative need of the population to be served for the services to be provided, including the availability of alternatives for meeting the need.

(iii) The financial need of the applicant.

(iv) The extent to which the facility will serve persons below the poverty level, as determined by the Secretary of Commerce.

(v) The extent to which the project will foster cost containment or improve the quality of care through enhanced efficiency and productivity.

(2) Priority for funding shall be based on the extent to which services will be made available relative to the cost of the project.

(b) The amount of any grant under this subpart may not exceed 75 percent of the cost of the project for which the grant is made unless the project is located in an area determined by the Secretary to be an urban or rural poverty area, in which case the grant may, as determined by the Secretary, cover up to 100 percent of such costs.

(c) If an applicant has not entered into a legally enforceable fixed price contract for the project for which funds are awarded under this subpart within 180 days of the date of the grant award, the grant award will automatically become null and void.

(d) Where a grant has been awarded to an applicant under this subpart on the condition that any applicable certificates of need and section 1122 finding required under § 124.4(f) will be provided, if such certificates and finding have not been received by the Secretary within 180 days of the grant award, the grant award will automatically become null and void.

§ 124.6 Grant payments.

Grant payments shall be made to the applicant in accordance with the requirements of subpart K of 45 CFR part 74.

§ 124.7 Use of grant funds.

Any funds granted pursuant to this subpart, as well as funds assured by the applicant for the project, shall be expended solely for carrying out the approved project in accordance with section 1625 of the Act, the regulations of this subpart, the terms and conditions of the grant award, and the applicable cost principles prescribed by subpart Q of 45 CFR part 74.

§ 124.8 Grantee accountability.

(a) *Records requirements.* (1) Applicants who have received Federal assistance under this subpart shall maintain, in accounting records which are separate from the records of all other funds, records which fully disclose the following:

(i) The amount of all payments received from the Secretary under this subpart,

(ii) Amounts and sources of all funds, in addition to funds received under this subpart, applied to the construction or modernization project funded under this subpart,

(iii) Disposition of all funds for the construction or modernization project funded under this subpart,

(iv) Total cost of the project approved under this subpart, and

(2) Upon request, applicants shall make such records, books, papers, or other documents available to the Secretary and the Comptroller General of the United States or any of their duly authorized representatives which, in their opinion, may be related or pertinent to the grant under this subpart.

(b) *Annual financial statement.* An applicant who receives grant assistance under this subpart shall, not later than 120 days after the end of its fiscal year, unless a longer period is approved by the Secretary for good cause shown, file an annual financial statement which meets the requirements of section 1634 of the Act.

§ 124.9 Nondiscrimination.

(a) Attention is called to the requirements of title VI of the Civil Rights Act of 1964 (78 Stat. 252, 42 U.S.C. 2000d *et seq.*) and in that particular section 601 of such Act which provides that no person in the United States shall, on the grounds of race, color or national origin be excluded from participation in, be denied the benefits of, or be subjected to discrimination under any program or activity receiving Federal financial assistance. A regulation implementing such title VI, which is applicable to grants made under this subpart, has been issued by the Secretary with the approval of the President (45 CFR part 80).

(b) Attention is called to the requirements of section 504 of the Rehabilitation Act of 1973, as amended, which provides that no otherwise qualified handicapped individual in the United States shall, solely by reason of the handicap, be excluded from participation in, be denied the benefits of, or be

subjected to discrimination under any program or activity receiving Federal financial assistance. A regulation implementing section 504 has been issued (45 CFR part 84 (42 FR 22676, May 4, 1977)).

(c) All portions and services of the entire facility for the construction or modernization of which, or in connection with which aid under the Act is sought must be made available without discrimination on account of creed and the applicant may not discriminate against any qualified person on account of creed with respect to the privilege of professional practice in the facility.

(d) Attention is also called to the requirements of title IX of the Education amendments of 1972 and in particular to section 901 of such Act (20 U.S.C. 1681) which provides that no person in the United States shall, on the basis of sex be excluded from participation in, be denied the benefits of, or be subjected to discrimination under any education program or activity receiving Federal financial assistance (45 CFR part 86).

(e) Each construction contract is subject to the condition that the applicant shall comply with the requirements of section 321 of the Comprehensive Alcohol Abuse and Alcoholism Prevention, Treatment, and Rehabilitation Act of 1970, as amended, which provides that alcohol abusers and alcoholics who are suffering from medical conditions shall not be discriminated against in admission or treatment, solely because of their alcohol abuse or alcoholism by any private or public general hospital that receives support in any form from any federally funded program.

(f) Each construction contract is subject to the condition that the applicant shall comply with the requirements of section 407 of the Drug Abuse Office and Treatment Act of 1972, as amended, which provides that drug abusers who are suffering from medical conditions shall not be discriminated against because of their drug abuse or drug dependence, by any private or public general hospital that receives support in any form from any federally funded program.

§ 124.10 Additional conditions.

The Secretary may impose additional conditions prior to or at the time of any grant award when in the Secretary's judgment such conditions are necessary to assure or protect advancement of the project in accordance with the purposes of the Act and the regulations of this subpart or the conservation of grant funds.

§ 124.11 Applicability of 45 CFR part 74.

The provisions of 45 CFR part 74, establishing uniform administrative requirements and cost principles, shall apply to all grants under this subpart to State and local governments as those terms are defined in subpart A of that part 74, except to the extent inconsistent with this subpart. The relevant provisions of the following subparts of part 74 shall also apply to grants to all other grantee organizations under this subpart.

45 CFR PART 74

Subpart:
A General.
B Cash depositories.
C Bonding and insurance.
F Grant-related income.
G Matching and cost sharing.
L Budget revision procedures.
M Grant closeout, suspension, and termination.
O Property.
P Procurement standards.
Q Cost principles.

Subparts B–E [Reserved]

Subpart F—Reasonable Volume of Uncompensated Services to Persons Unable to Pay

AUTHORITY: 42 U.S.C. 216; 42 U.S.C. 300s(3).

SOURCE: 52 FR 46031, Dec. 3, 1987, unless otherwise noted.

§ 124.501 Applicability.

(a) The provisions of this subpart apply to any recipient of Federal assistance under title VI or XVI of the Public Health Service Act that gave an assurance that it would make available, in the facility or portion of the facility constructed, modernized or

converted with that assistance, a reasonable volume of services to persons unable to pay for the services.

(b) The provisions of this subpart apply to facilities for the following periods:

(1) *Facilities assisted under title VI.* Except as otherwise herein provided, a facility assisted under title VI of the Act shall provide uncompensated services at the annual compliance level required by § 124.503(a) for:

(i) Twenty years after the completion of construction, in the case of a facility for which the Secretary provided grant assistance under section 606 of the Act; or

(ii) The period from completion of construction until the amount of a direct loan under sections 610 and 623 of the Act, or the amount of a loan with respect to which the Secretary provided a guarantee and interest subsidy under section 623 of the Act, is repaid, in the case of a facility for which such a loan was made.

(iii) ''Completion of construction'' means:

(A) The date on which the Secretary determines the facility was opened for service;

(B) If the opening date is not available, it means the date on which the Secretary approved the final part of the facility's application for assistance under title VI of the Act;

(C) If the date of final approval is not available, it means whatever date the Secretary determines most reasonably approximates the date of final approval.

(2) *Facilities assisted under title XVI.* The provisions of this subpart apply to a facility assisted under title XVI of the Act at all times following the Secretary's approval of the facility's application for assistance under title XVI, except that if the facility does not at the time of that approval provide health services, the assurance applies at all times following the facility's initial provision of health services to patients, as determined by the Secretary.

§ 124.502 Definitions.

As used in this subpart—

(a) *Act* means the Public Health Service Act, as amended.

(b) *Allowable credit* for services provided to a specific patient means the lesser of the facility's usual charge for those services, or the usual charge multiplied by the percentage which the total allowable cost as reported by the facility in the facility's preceding fiscal year under title XVIII of the Social Security Act (42 U.S.C. 1395, *et seq.*) and the implementing regulations (42 CFR part 413) bears to the facility's total patient revenues for the year.

(c) *Applicant* means a person who requests uncompensated services or on whose behalf uncompensated services are requested.

(d) *CPI* means the National Consumer Price Index for medical care.

(e) *Facility* means an entity that received assistance under title VI or XVI of the Act and provided an assurance that it would provide a reasonable volume of services to persons unable to pay for the services.

(f) *Federal assistance* means assistance received by the facility under title VI or title XVI of the Act and any assistance supplementary to that title VI or title XVI assistance received by the facility under any of the following acts: the District of Columbia Medical Facilities Construction Act of 1968, 82 Stat. 631 (Pub. L. 90–457); the Public Works Acceleration Act of 1962 (42 U.S.C. 2641, *et seq.*); the Public Works and Economic Development Act of 1965 (42 U.S.C. 3121, *et seq.*); the Appalachian Regional Development Act of 1965, as amended (40 U.S.C. App.); the Local Public Works Capital Development and Investment Act of 1976 (Pub. L. 94–369). In the case of a loan guaranteed by the Secretary with an interest subsidy, the amount of Federal assistance under title VI or title XVI for a fiscal year is the total amount of the interest subsidy that the Secretary will have paid by the close of that fiscal year, as well as any other payments which the Secretary has made as of the beginning of the fiscal year on behalf of the facility in connection with the loan guarantee or the direct loan which has been sold.

(g) *Fiscal year* means the facility's fiscal year.

(h) *Nursing home* means a facility which received Federal assistance for and operates as a *facility for long-term*

care as defined at, as applicable, section 645(h) or section 1624(6) of the Act.

(i) *Operating costs* for any fiscal year means the total operating expenses of a facility as set forth in an audited financial statement, minus the amount of reimbursement, if any, received (or if not received, claimed) in that year under titles XVIII and XIX of the Social Security Act.

(j) *Persons unable to pay* means persons who meet the eligibility criteria set out in § 124.505.

(k) *Request for uncompensated services* means any indication by or on behalf of an individual seeking services of the facility of the individual's inability to pay for services. A request for uncompensated services may be made at any time, including following institution of a collection action against the individual.

(l) *Secretary* means the Secretary of Health and Human Services or [his or her] delegatee.

(m) *Uncompensated services* means:

(1) For facilities other than those certified under § 124.513, § 124.514, § 124.515, or § 124.516, health services that are made available to persons unable to pay for them without charge or at a charge which is less than the allowable credit for those services. The amount of uncompensated services provided in a fiscal year is the total allowable credit for services less the amount charged for the services following an eligibility determination. Excluded are services provided more than 96 hours following notification to the facility by a peer review organization that it disapproved the services under section 1155(a)(1) or section 1154(a)(1) of the Social Security Act.

(2) For facilities certified under § 124.513, § 124.514, § 124.515, or § 124.516, services as defined in paragraph (m)(1) of this section and services that are made available to persons unable to pay for them under programs described by the documentation provided under § 124.513(c)(2), § 124.514(c)(2), or § 124.516(c)(2), as applicable, or pursuant to the terms of the applicable grant or agreement as provided in § 124.515. Except as provided in § 124.516, excluded are services reimbursed by Medicare, Medicaid, or other third party programs, including services for which reimbursement was provided as payment in full, and services provided more than 96 hours following notification to the facility by a peer review organization that it disapproved the services under section 1155(a)(1) or section 1154(a)(1) of the Social Security Act.

[52 FR 46031, Dec. 3, 1987, as amended at 59 FR 44639, Aug. 30, 1994]

§ 124.503 Compliance level.

(a) *Annual compliance level.* Subject to the provisions of this subpart, a facility is in compliance with its assurance to provide a reasonable volume of services to persons unable to pay if it provides for the fiscal year uncompensated services at a level not less than the lesser of—

(1) Three percent of its operating costs for the most recent fiscal year for which an audited financial statement is available;

(2) Ten percent of all Federal assistance provided to or on behalf of the facility, adjusted by a percentage equal to the percentage change in the CPI between the year in which the facility received assistance or 1979, whichever is later, and the most recent year for which a published index is available.

(b) *Deficits.* If in any fiscal year a facility fails to meet its annual compliance level, it shall provide uncompensated services in an amount sufficient to make up that deficit in subsequent years, and its period of obligation shall be extended until the deficit is made up.

(1) *Types of deficits.* For purposes of determining the timing and amount of any deficit make-up, there are two types of deficits:

(i) *Justifiable deficits.* A justifiable deficit is one in which the facility did not meet its annual compliance level due to either financial inability (as determined under § 124.511(c)) or, although otherwise in compliance with this subpart, a lack of eligible applicants for uncompensated services during the fiscal year.

(ii) *Noncompliance deficits.* A noncompliance deficit is one in which the facility failed to meet its annual compliance level due to noncompliance with this subpart.

(2) *Timing of deficit make-up*—(i) *Justifiable deficits.* (A) A facility assisted

under title VI of the Act may make up a justifiable deficit at any time during its period of obligation or in the year (or years, if necessary) immediately following its period of obligation.

(B) A facility assisted under title XVI of the Act is not required to make up a justifiable deficit.

(ii) *Noncompliance deficits.* (A) A facility must begin to make up a noncompliance deficit in the fiscal year following the finding of noncompliance by the Secretary.

(B) A facility which claimed financial inability under §124.509(a)(2)(iii) and is found by the Secretary, pursuant to §124.511(c), to have been financially able to provide uncompensated services in the year in which the deficit was incurred shall begin to make up the deficit beginning in the fiscal year following the Secretary's finding.

(C) A facility required to make up a noncompliance deficit but which is determined by the Secretary, pursuant to §124.511(c), to be financially unable to do so in the year following the Secretary's finding of noncompliance shall make up the deficit in accordance with a schedule set by the Secretary.

(3) *Deficit make-up amount.* (i) The amount of a deficit in any fiscal year is the difference between the facility's annual compliance level for that year and the amount of uncompensated services provided in that year.

(ii) The amount of a justifiable deficit must be adjusted by a percentage equal to the percentage change in the CPI between the CPI available in the fiscal year in which the deficit was incurred and the CPI available in the fiscal year in which it was made up.

(iii) An amount equal to the result of dividing the amount of any noncompliance deficit for a fiscal year by the number of years of obligation remaining and adjusting it by a percentage equal to the percentage change in the CPI between the CPI available in the fiscal year in which the deficit was incurred and the CPI available in the fiscal year in which it was made up shall be added to a facility's annual compliance level for each fiscal year following the fiscal year of the finding of noncompliance.

(4) *Affirmative action plan for precluding future deficits.* Except where a facility reports to the Secretary in accordance with §124.509(a)(2)(iii) that it was financially unable to provide uncompensated services at the annual compliance level, a facility that fails to meet its annual compliance level in any fiscal year shall, in the following year, develop and implement a plan of action that can reasonably be expected to enable the facility to meet its annual compliance level. Such actions may include special notice to the community through newspaper, radio, and television, or expansion of service to Category B, or, with respect to nursing homes, Category C, persons. The Secretary may require changes to the plan. Where a facility fails to comply with this section, the Secretary may require it to make up the deficit in the fiscal year following the year in which it was required to institute the plan.

(c) *Excesses.* (1) Except for facilities certified under §124.513, §124.514, or §124.515, if a facility provides in a fiscal year uncompensated services in an amount exceeding its annual compliance level, it may apply the amount of excess to reduce its annual compliance level in any subsequent fiscal year. The facility may use any excess amount to reduce its annual compliance level only if the services in excess of the annual compliance level are provided in accordance with the requirements of this subpart.

(2) *Calculation and adjustment of excess.* (i) The amount of an excess in uncompensated services in any fiscal year is the difference between the amount of uncompensated services the facility provided in that year and the facility's annual compliance level for that year.

(ii) The amount of any excess compliance applied to reduce a facility's annual compliance level must be adjusted by a percentage equal to the percentage change in the CPI between the CPI available in the fiscal year in which the facility provided the excess, and the CPI available in the fiscal year in which the facility applies the excess to reduce its annual compliance level or satisfy its remaining obligation.

(3) Except as provided in subparagraph (1) of this paragraph, a facility assisted under title VI may in any fiscal year apply the amount of excess

credited under this paragraph to satisfy the remainder of its obligation to provide uncompensated services. A facility's remaining obligation is determined as follows:

(i) Where the annual compliance level in such fiscal year is established under paragraph (a)(2) of this section, the remaining obligation is:

(A) For grant assistance, 10 percent of each grant under obligation, multiplied by the number of years remaining in its period of obligation, adjusted as provided for in paragraph (a)(2) of this section, plus any deficits required to be made up and less any unused excesses accrued in prior years; and

(B) For loan assistance, the facility's annual compliance level multiplied by the number of years remaining in the scheduled life of the loan, plus the sum of 10 percent of each yearly cumulative total of additional interest subsidy or other payments (which the Secretary will have made in connection with the guaranteed loan or a direct loan which has been sold) in each subsequent year remaining in the scheduled life of the loan, plus any deficits required to be made up, and less any unused excesses accrued in prior years; or

(ii) Where the annual compliance level in such fiscal year is established under paragraph (a)(1) of this section, the remaining obligation is the average of the facility's annual compliance levels in the previous three years, multiplied by the number of years remaining in its period of obligation, plus any deficits required to be made up under this section, and less any unused excesses accrued in prior years.

[52 FR 46031, Dec. 3, 1987; 52 FR 48362, Dec. 21, 1987, as amended at 60 FR 16756, Mar. 31, 1995]

§ 124.504 Notice of availability of uncompensated services.

(a) *Published notice.* A facility shall publish in a newspaper of general circulation in its area notice of its uncompensated services obligation before the beginning of its fiscal year. The notice shall include:

(1) The plan of allocation the facility proposes to adopt;

(2) The amount of uncompensated services the facility intends to make available in the fiscal year or a statement that the facility will provide uncompensated services to all persons unable to pay who request uncompensated services;

(3) An explanation, if the amount of uncompensated services the facility intends to make available in a fiscal year is less than the annual compliance level. If a facility has satisfied its remaining uncompensated services obligation since the last published notice under this paragraph, or will satisfy the remaining obligation during the fiscal year, the explanation must include this information; and

(4) A statement inviting interested parties to comment on the allocation plan.

(b) *Posted notice.* (1) The facility shall post notices, which the Secretary supplies in English and Spanish, in appropriate areas in the facility, including but not limited to the admissions areas, the business office, and the emergency room.

(2) If in the service area of the facility the ''usual language of households'' of ten percent or more of the population according to the most recent figures published by the Bureau of the Census is other than English or Spanish, the facility shall translate the notice into that language and post the translated notice on signs substantially similar in size and legibility to and posted with those supplied under paragraph (b)(1) of this section.

(3) The facility shall make reasonable efforts to communicate the contents of the posted notice to persons who it has reason to believe cannot read the notice.

(c) *Individual written notice.* (1) In any period during a fiscal year in which uncompensated services are available in the facility, the facility shall provide individual written notice of the availability of uncompensated services to each person who seeks services in the facility on behalf of himself or another. The individual written notice must:

(i) State that the facility is required by law to provide a reasonable amount of care without or below charge to people who cannot afford care;

(ii) Set forth the criteria the facility uses for determining eligibility for uncompensated services (in accordance with the financial eligibility criteria and the allocation plan);

(iii) State the location in the facility where anyone seeking uncompensated services may request them; and

(iv) State that the facility will make a written determination of whether the person will receive uncompensated services, and the date by or period within which the determination will be made.

(2) The facility shall provide the individual written notice before providing services, except where the emergency nature of the services provided makes prior notice impractical. If this exception applies, the facility shall provide the individual written notice to the next of kin or to the patient as soon as practical, but not later than when first presenting a bill for services.

(3) The facility shall make reasonable efforts to communicate the contents of the individual written notice to persons who it has reason to believe cannot read the notice.

§ 124.505 Eligibility criteria.

(a) A person unable to pay for health services is a person who—

(1) Is not covered, or receives services not covered, under a third-party insurer or governmental program, except where the person is not covered because the facility fails to participate in a program in which it is required to participate by § 124.603(c);

(2) Falls into one of the following categories:

(i) *Category A*—A person whose annual individual or family income, as applicable, is not greater than the current poverty line issued by the Secretary pursuant to 42 U.S.C. 9902 that applies to the individual or family. The facility shall provide uncompensated services to persons in Category A without charge.

(ii) *Category B*—A person whose annual individual or family income, as applicable, is greater than but not more than twice the poverty line issued by the Secretary pursuant to 42 U.S.C. 9902 that applies to the individual or family. If persons in Category B are included in the allocation plan, the facility shall provide uncompensated services to these persons without charge, or in accordance with a schedule of charges as specified in the allocation plan.

(iii) *Category C*—With respect only to persons seeking or receiving nursing home services, a person whose annual or family income, as applicable, is more than twice but not greater than three times the poverty line issued by the Secretary pursuant to 42 U.S.C. 9902 that applies to the individual or family. If persons in Category C are included in the allocation plan, the facility shall provide uncompensated services to these persons without charge, or in accordance with a schedule of charges as specified in the allocation plan; and

(3) Requests services within the facility's allocation plan in effect at the time of the request.

(b) For purposes of determining eligibility for uncompensated services, revisions of the poverty line are effective 60 days from the date of their publication in the FEDERAL REGISTER.

(c) A person is eligible for uncompensated services if the person's individual or family annual income, as applicable, is at or below the level established under paragraph (a)(2) of this section, when calculated by either of the following methods:

(1) Multiplying by four the person's or family's income, as applicable, for the three months preceding the request for uncompensated services;

(2) Using the person's or family's income, as applicable, for the twelve months preceding the request for uncompensated services.

[52 FR 46031, Dec. 3, 1987, as amended at 60 FR 16756, Mar. 31, 1995]

§ 124.506 Allocation of services; plan requirement.

(a)(1) A facility shall provide its uncompensated services in accordance with a plan that sets out the method by which the facility will distribute its uncompensated services among persons unable to pay. The plan must:

(i) State the type of services that will be made available;

(ii) Specify the method, if any, for distributing those services in different periods of the year;

(iii) State whether Category B or, in the case of nursing homes only, Category C persons will be provided uncompensated services, and if so, whether the services will be available without charge or at a reduced charge;

(iv) If services will be made available to Category B persons at a reduced charge, specify the method used for reducing charges, and provide that the method is applicable to all persons in Category B;

(v) With respect to nursing homes only, if services will be made available to Category C persons at a reduced charge, specify the method used for reducing charges, provided that such method may not result in greater reductions than those afforded to Category B persons, and provide that this method is applicable to all persons in Category C; and

(vi) Provide that the facility provides uncompensated services to all persons eligible under the plan who request uncompensated services.

(2) A facility must adopt an allocation plan that meets the requirements of paragraph (a) by publishing the plan in a newspaper of general circulation in its area. The plan may take effect no earlier than 60 days following the date of publication.

(b)(1) If in any fiscal year a facility fails to adopt and publish a plan in accordance with paragraph (a) of this section, it shall provide uncompensated services in accordance with the last plan it published in a newspaper of general circulation in its area.

(2) If no plan was previously published in accordance with paragraph (a)(2) of this section, the facility must provide uncompensated services without charge to all applicants in Category A and Category B, and, with respect to nursing homes, Category C, who request service in the facility. This requirement applies until the facility ceases to provide uncompensated services under § 124.508 or until an allocation plan published in accordance with paragraph (a)(2) of this section becomes effective.

(c) A facility may revise its allocation plan during the fiscal year by publishing the revised plan in a newspaper of general circulation in the area it serves. A revised plan may take effect no earlier than 60 days following the date of publication.

[52 FR 46031, Dec. 3, 1987, as amended at 60 FR 16756, Mar. 31, 1995]

§ 124.507 Written determinations of eligibility.

(a) Determinations of eligibility must be in writing, be made in accordance with this section, and a copy of the determination must be provided to the applicant promptly.

(b) *Content of determinations*—(1) *Favorable determinations.* A determination that an applicant is eligible must indicate:

(i) That the facility will provide uncompensated services at no charge or at a specified charge less than the allowable credit for the services;

(ii) The date on which services were requested;

(iii) The date on which the determination was made;

(iv) The applicant's individual or family income, as applicable, and family size; and

(v) The date on which services were or will be first provided to the applicant.

(2) *Conditional determinations.* (i) As a condition to providing uncompensated services, a facility may:

(A) Require the applicant to furnish any information that is reasonably necessary to substantiate eligibility; and

(B) Require the applicant to apply for any benefits under third party insurer or governmental programs to which he/she is or could be entitled upon proper application.

(ii) A conditional determination must:

(A) Comply with paragraph (b)(1) of this section; and

(B) State the condition(s) under which the applicant will be found eligible.

(iii) When a facility determines that the condition(s) upon which a conditional determination was made has been met, or will not be met, it shall make a favorable determination or denial on the request, as appropriate, in accordance with this section.

(3) *Denials.* A facility must provide to each applicant denied the uncompensated services requested, in whole or in

part, a dated statement of the reasons for the denial.

(c) *Timing of determinations*—(1) *Preservice determinations.* (i) Facilities other than nursing homes shall make a determination of eligibility within two working days following a request for uncompensated services which is made before receipt of outpatient services or before discharge for inpatient services;

(ii) Nursing homes shall make a determination of eligibility within ten working days, but no later than two working days following the date of admission, following a request for uncompensated services made prior to admission.

(2) *Postservice determinations.* All facilities shall make a determination of eligibility not later than the end of the first full billing cycle following a request for uncompensated services which is made after receipt of outpatient services, discharge for inpatient services, or admission for nursing home services.

[52 FR 46031, Dec. 3, 1987; 52 FR 48362, Dec. 21, 1987]

§ 124.508 Cessation of uncompensated services.

(a) *Facilities not certified under § 124.513, § 124.514, § 124.515 or § 124.516.* Where a facility, other than a facility certified under § 124.513, § 124.514, § 124.515, or § 124.516, has maintained the records required by § 124.510(a) and determines based thereon that it has met its annual compliance level for the fiscal year or the appropriate level for the period specified in its allocation plan, it may, for the remainder of that year or period:

(1) Cease providing uncompensated services;

(2) Cease providing individual notices in accordance with § 124.504(c);

(3) Remove the posted notices required by § 124.504(b); and

(4) Post an additional notice stating that it has satisfied its obligation for the fiscal year or appropriate period and when additional uncompensated services will be available.

(b) *Facilities certified under § 124.514.* Where a facility certified under § 124.514 has maintained the records required by § 124.510(c) and determines based thereon that it has met its compliance level, under § 124.514(d), for the fiscal year, it may, for the remainder of the fiscal year:

(1) Cease providing uncompensated services; and

(2) Discontinue providing notice pursuant to § 124.514(b)(2).

[52 FR 46031, Dec. 3, 1987, as amended at 59 FR 44639, Aug. 30, 1994]

§ 124.509 Reporting requirements.

(a) *Facilities not certified under § 124.513, § 124.514, § 124.515, or § 124.516*—(1) *Timing of reports.* (i) A facility shall submit to the Secretary a report to assist the Secretary in determining compliance with this subpart once every three fiscal years, on a schedule to be prescribed by the Secretary.

(ii) A facility shall submit the required report more frequently than once every three years under the following circumstances:

(A) If the facility determines that in the preceding fiscal year it did not provide uncompensated services at the annual compliance level, it shall submit a report.

(B) If the Secretary determines, and notifies the facility in writing that a report is needed for proper administration of the program, the facility shall submit a report within 90 days after receiving notice from the Secretary, or within 90 days after the close of the fiscal year, whichever is later.

(iii) Except as specified in paragraph (a)(1)(ii)(B) of this section, the reports required by this section shall be submitted within 90 days after the close of the fiscal year, unless a longer period is approved by the Secretary for good cause.

(2) *Content of report.* The report must include the following information in a form prescribed by the Secretary:

(i) Information that the Secretary prescribes to permit a determination of whether a facility has met the annual compliance level for the fiscal years covered by the report;

(ii) The date on which the notice required by § 124.504(a) was published, and the name of the newspaper that printed the notice;

(iii) If the amount of uncompensated services provided by the facility in the preceding fiscal year was lower than

the annual compliance level, an explanation of why the facility did not meet the required level. If the facility claims that it failed to meet the required compliance level because it was financially unable to do so, it shall explain and provide documentation prescribed by the Secretary;

(iv) If the facility is required to submit an affirmative action plan, a copy of the plan.

(v) Other information that the Secretary prescribes.

(3) *Institution of suit.* Not later than 10 days after being served with a summons or complaint the facility shall notify the HHS Regional Health Administrator[1] for the Region in which it is located of any legal action brought against it alleging that it has failed to comply with the requirements of this subpart.

(b) *Facilities certified under § 124.513 or § 124.516.* A facility certified under § 124.513 or § 124.516 shall comply with paragraph (a)(3) of this section and shall submit within 90 days after the close of its fiscal year, as appropriate:

(1) A certification, signed by the responsible official of the facility, that there has been no material change in the factors upon which the certification was based; or

(2) A certification, signed by the responsible official of the facility and supported by appropriate documentation, that there has been a material change in the factors upon which the certification was based.

(c) *Facilities certified under § 124.514.* A facility certified under § 124.514 shall comply with paragraph (a)(3) of this section and shall submit within 90 days after the close of its fiscal year, as appropriate:

(1)(i) A certification, signed by the responsible official of the facility, that there has been no material change in the factors upon which the certification was based; or

(ii) A certification, signed by the responsible official of the facility and supported by appropriate documentation, that there has been a material change in the factors upon which the certification was based; and

(2) A certification, signed by the responsible official of the facility, of the amount of uncompensated services provided in the previous fiscal year.

(d) *Facilities certified under § 124.515.* A facility certified under § 124.515 shall submit such reports as are required by the terms of its grant under section 329 or 330 or by its agreement under section 334 of the Act, as applicable, at such intervals as the Secretary may require.

(Approved by the Office of Management and Budget under control number 0915–0077)

[52 FR 46031, Dec. 3, 1987, as amended at 52 FR 48362, Dec. 21, 1987; 54 FR 52939, Dec. 26, 1989; 59 FR 44639, Aug. 30, 1994]

§ 124.510 Record maintenance requirements.

(a) *Facilities not certified under § 124.513, § 124.514, § 124.515, or § 124.516.* (1) A facility shall maintain, make available for public inspection consistent with personal privacy, and provide to the Secretary on request, any records necessary to document its compliance with the requirements of this subpart in any fiscal year, including:

(i) Any documents from which the information required to be reported under § 124.509(a) was obtained;

(ii) Accounts which clearly segregate uncompensated services from other accounts; and

(iii) Copies of written determinations of eligibility under § 124.507.

(2) A facility shall retain the records maintained pursuant to paragraph (a)(1) for three years after submission of the report required by § 124.509(a)(1), except where a longer period is required by the Secretary, or until 180 days following the close of the Secretary's assessment investigation under § 124.511(b), whichever is less.

(3) A facility shall, within 60 days of the end of each fiscal year, determine the amount of uncompensated services it provided in that fiscal year. Documents that support the facility's determination shall be made available to the public on request. If a report is or will be filed under § 124.509(a)(1), a facility may respond to a request by providing a copy of the report to the requester.

(b) *Facilities certified under § 124.513, § 124.514, or § 124.516.* A facility certified

[1] The addresses of the HHS Regional Offices are set out in 45 CFR 5.31.

under § 124.513, § 124.514, or § 124.516 shall maintain, make available for public inspection consistent with personal privacy, and provide to the Secretary on request, any records necessary to document its compliance with the applicable requirements of this subpart in any fiscal year, including those documents submitted to the Secretary under § 124.513(c), § 124.514(c), or § 124.516(c). A facility shall maintain these records for three years, except where a longer period is required as a result of an investigation by the Secretary. In such cases, records must be kept until 180 days following the close of the Secretary's assessment investigation under § 124.511(b).

(c) *Facilities certified under § 124.515.* A facility certified under § 124.515 shall maintain the records required by its grant under section 329 or section 330 or its agreement under section 334 of the Act, as applicable, for such period of time as the grant agreement may require.

(Information collection requirements in paragraphs (a) and (b) approved by the Office of Management and Budget under control number 0915–0103)

[52 FR 46031, Dec. 3, 1987; 52 FR 48362, Dec. 21, 1987; 59 FR 44639, Aug. 30, 1994]

§ 124.511 Investigation and determination of compliance.

(a) *Complaints.* A complaint that a facility is out of compliance with the requirements of this subpart may be filed with the Secretary by any person.

(1) A complaint is considered to be filed with the Secretary on the date the following information is received in the Office of the HHS Regional Health Administrator for the Region in which the facility is located:

(i) The name and address of the person making the complaint or on whose behalf the complaint is made;

(ii) The name and location of the facility;

(iii) The date or approximate date on which the event occurred; and

(iv) A statement of what actions the complainant considers to violate the requirements of this subpart.

(2) The Secretary promptly provides a copy of the complaint to the facility named in the complaint.

(3) When the Secretary investigates a facility, the facility, including a facility certified under § 124.513, § 124.514, § 124.515, or § 124.516, shall provide to the Secretary on request any documents, records and other information concerning its operation that relate to the requirements of this subpart. A facility will be presumed to be out of compliance with its assurance unless it supplies documentation sufficient to show compliance with the applicable provisions of this subpart.

(4) Section 1627 of the Act provides that if the Secretary dimisses a complaint or the Attorney General has not brought an action for compliance within six months from the date on which the compliant is filed, the person filing it may bring a private action to effectuate compliance with the assurance. If the Secretary determines that he/she will be unable to issue a decision on a complaint or otherwise take appropriate action within the six month period, the Secretary may, based on priorities for the disposition of complaints that are established to promote the most effective use of enforcement resources, or on the request of the applicant, dismiss the complaint without a finding as to compliance prior to the end of the six month period, but no earlier than 45 days after the complaint is filed.

(b) *Assessments.* The Secretary periodically investigates and assesses facilities to ascertain compliance with the requirements of this subpart, including certification of the amount of uncompensated services provided in a fiscal year or years, and provides guidance and prescribes corrective action to correct noncompliance.

(1) *Compliance after February 1, 1988.* (i) The Secretary may certify that a facility has substantially complied with its assurance for a fiscal year or years, and such certification shall establish that the facility provided the amount of uncompensated services certified for the period covered by the certification.

(ii) A certification of substantial compliance shall be based on the amount properly claimed by the facility pursuant to § 124.509(a), utilizing procedures determined by the Secretary to be sufficient to establish that the facility has substantially complied

with its assurance for the period covered by the certification. The procedures will include examination of individual account data to the extent deemed necessary by the Secretary.

(iii) A certification of substantial compliance will be made where the Secretary determines that, for the period covered by the certification, the facility provided uncompensated services to eligible persons who had equal opportunity to apply therefor. In making this determination, the Secretary will consider, in descending order of importance, whether—

(A) Corrective action prescribed pursuant to § 124.512(b) has been taken by the facility;

(B) Any noncompliance with the requirements of this subpart may be remedied by corrective action under § 124.512(b);

(C) The facility had procedures in place that complied with the requirements of §§ 124.504(c), 124.505, 124.507, 124.509, 124.510, 124.513(b)(2), 124.514(b)(2), 124.515, and 124.516 (b)(1) or (b)(2), as applicable, and systematically correctly followed such procedures.

(2) *Compliance prior to February 1, 1988.* The Secretary will determine the amount of creditable services provided prior to the effective date of these rules using the compliance standards applicable under the rules as promulgated on May 18, 1979, based on procedures determined by the Secretary to be sufficient to establish that the facility provided such amounts of uncompensated services in the period(s) being assessed.

(c) *Determinations of financial inability.* In determining whether a facility was or is financially able to meet its annual compliance level, the Secretary will consider any comments submitted by interested parties. In making this determination, the Secretary will consider factors such as:

(1) The ratio of revenues to expenses;

(2) The occupancy rate;

(3) The ratio of current assets to current liabilities;

(4) The average cost per patient day;

(5) The number of days of operating expenses in accounts payable;

(6) The number of days of revenues in accounts receivable;

(7) The sinking fund (or depreciation fund) balance;

(8) The debt coverage ratio; and

(9) The availability of restricted or unrestricted funds (such as an endowment) available for charitable use.

[52 FR 46031, Dec. 3, 1987; 52 FR 48362, Dec. 21, 1987; 53 FR 5576, Feb. 25, 1988; 59 FR 44639, Aug. 30, 1994]

§ 124.512 Enforcement.

(a) If the Secretary finds, based on his/her investigation under § 124.511, that a facility did not comply with the requirements of this subpart, the Secretary may take any action authorized by law to secure compliance, including but not limited to, voluntary agreement or a request to the Attorney General to bring an action against the facility for specific performance.

(b) A facility, including a facility certified under § 124.513, § 124.514, or § 124.516, that has denied uncompensated services to any person because it failed to comply with the requirements of this subpart will not be in compliance with its assurance until it takes whatever steps are necessary to remedy fully the noncompliance, including:

(1) Provision of uncompensated services to applicants improperly denied;

(2) Repayment of amounts improperly collected from persons eligible to receive uncompensated services; and

(3) Other corrective actions prescribed by the Secretary.

(c) The Secretary may disallow all of the uncompensated services claimed in a fiscal year where the Secretary finds that the facility was in substantial noncompliance with its assurance because it failed to:

(1) Have a system for providing notice to eligible persons as required by § 124.504(c), § 124.513(b)(2), § 124.514(b)(2), or § 124.516(b)(2)(ii)(A), as applicable;

(2) Comply with the applicable reporting requirements of § 124.509;

(3) Have a system for maintaining records of uncompensated services provided in accordance with § 124.510; or

(4) Take corrective action prescribed pursuant to paragraph (b) of this section.

(d) In the absence of a finding of substantial compliance or substantial noncompliance in a fiscal year, the Secretary may disallow uncompensated services claimed by a facility in that fiscal year to the extent that the Secretary finds that such services are not documented as uncompensated services under § 124.510 or are subject to disallowance under § 124.513(d) or § 124.514(d), as applicable.

[52 FR 46031, Dec. 3, 1987, as amended at 59 FR 44639, Aug. 30, 1994]

§ 124.513 Public facility compliance alternative.

(a) *Effect of certification.* The Secretary may certify a facility which meets the requirements of paragraphs (b) and (c) of this section as a ''public facility''. A facility which is so certified is not required to comply with this subpart except as otherwise herein provided.

(b) *Criteria for qualification.* A public facility may qualify for certification under this section if all of the following criteria are met:

(1) It is a facility which is owned and operated by a unit of State or local government or a quasi-public corporation as defined at 42 CFR 124.2(m).

(2) It provides health services without charge or at a substantially reduced rate to persons who are determined by the facility to qualify therefor under a program of discounted health services. A ''program of discounted health services'' must provide for financial and other objective eligibility criteria and procedures, including notice prior to nonemergency service, that assure effective opportunity for all persons to apply for and obtain a determination of eligibility for such services, including a determination prior to service where requested; *provided that,* such criteria and procedures are not required where the facility makes all services available to all persons at no or nominal charge.

(3)(i) It received, for the three most recent fiscal years, at least 10 percent of its total operating revenue (net patient revenue plus other operating revenue, exclusive of any amounts received, or if not received, claimed, as reimbursement under titles XVIII and XIX of the Social Security Act) from State and local tax appropriations or other State and local government revenues, or from a quasi-public corporation as defined at 42 CFR 124.2(m), to cover operating deficits attributable to the provision of discounted services; or

(ii) If provided, in each of the three most recent fiscal years, uncompensated services under this subpart or under programs described by the documentation provided under § 124.513(c)(2) in an amount not less than twice the annual compliance level computed under § 124.503(a).

(c) *Procedures for certification.* To be certified under this section, a facility must submit to the Secretary, in addition to other materials that the Secretary may from time to time require, copies of the following:

(1) Audited financial statements or official State or local government documents (such as annual reports or budget documents), for the three most recent fiscal years, sufficient to show that the facility meets the criteria in paragraph (b)(3)(i) or (ii) of this section.

(2) A complete description of its program(s) of discounted health services, including charging and collection policies of the facility, and eligibility criteria and notice and determination procedures used under its program(s) of discounted services.

(d) *Period of effectiveness.* (1) A certification by the Secretary under this section remains in effect until withdrawn. The Secretary may disallow credit under this subpart when the Secretary determines that there has been a material change in any factor upon which certification was based or substantial noncompliance with this subpart. The Secretary may withdraw certification where the change or noncompliance has not been adequately remedied or otherwise continues.

(2) *Deficits*—(i) *Title VI-assisted facilities with assessed deficits.* Where a facility assisted under title VI of the Act has been assessed as having a deficit under § 124.503(b) that has not been made up prior to certification under this section, the facility may make up that deficit by either—

(A) Demonstrating to the Secretary's satisfaction, that it met the requirements of paragraph (b) of this section

for each year in which a deficit was assessed; or

(B) Providing an additional period of service under this section on the basis of one (or portion of a) year of certification for each year (or portion of a year) of deficit assessed. The period of obligation applicable to the facility under §124.501(b) shall be extended until the deficit is made up in accordance with the preceding sentence.

(ii) *Title VI-assisted facilities which have not been assessed.* Where any period of compliance under this subpart of a facility assisted under title VI of the Act has not been assessed, the facility will be presumed to have no allowable credit for such period. The facility may either—

(A) Make up such deficit in accordance with paragraph (d)(2)(i) of this section; or

(B) Submit an independent certified audit, conducted in accordance with procedures specified by the Secretary, of the facility's records maintained pursuant to §124.510. If the audit establishes to the Secretary's satisfaction that no, or a lesser, deficit exists for the period in question, the facility will receive credit for the period so justified. Any deficit which the Secretary determines still remains must be made up in accordance with paragraph (d)(2)(i) of this section.

(iii) *Title XVI-assisted facilities.* (A) A facility assisted under title XVI of the Act which has an assessed deficit which was not made up prior to certification under this section shall make up that deficit in accordance with paragraph (d)(2)(i)(A) of this section. If it cannot make the showing required by that paragraph, it shall make up the deficit when its certification under this section is withdrawn.

(B) A facility assisted under title XVI of the Act whose compliance with this subpart has not been completely assessed will be presumed to have no allowable credit for the unassessed period. The facility may make up the deficit by—

(*1*) Following the procedure of subparagraph (d)(2)(iii)(A) of this section; or

(*2*) Submitting an independent certified audit, conducted in accordance with procedures specified by the Secretary, of the facility's records maintained pursuant to §124.510. If the audit establishes to the Secretary's satisfaction that no, or a lesser, deficit exists for the period in question, the facility will receive credit for the period so justified. Any deficit which the Secretary determines still remains must be made up in accordance with paragraph (d)(2)(iii)(A) of this section.

(Approved by the Office of Management and Budget under control number 0915–0103)

[52 FR 46031, Dec. 3, 1987; 52 FR 48362, Dec. 21, 1987]

§ 124.514 Compliance alternative for facilities with small annual obligations.

(a) *Effect of certification.* The Secretary may certify a facility which meets the requirements of paragraphs (b) and (c) of this section as a ''facility with a small annual obligation.'' A facility which is so certified is not required to comply with this subpart except as otherwise herein provided.

(b) *Criteria for qualification.* A facility may qualify for certification under this section if all of the following criteria are met:

(1)(i) Title VI-assisted facilities. (A) For the facility's fiscal year in which this section becomes effective, the level, computed under §124.503(c) (3), divided by the number of years remaining in its period of obligation (including an additional year or portion of a year for each year or portion of a year in which a deficit was incurred and has not been made up), is not more than $10,000;

(B) For a subsequent fiscal year, the level computed under paragraph (A) of this paragraph (b)(1)(i), is at or less than $10,000, adjusted by a percentage equal to the percentage change in the CPI available in the year in which this section becomes effective and the most recent year for which a published index is available.

(ii) *Title XVI-assisted facilities.* (A) For the facility's fiscal year in which this section becomes effective, the level under §124.503(a), plus the amount of any noncompliance deficits which have not been made up, is at or less than $10,000.

(B) For a subsequent fiscal year, the level, computed under paragraph (A) of

this paragraph (b)(1)(ii), is at or less than $10,000, adjusted as provided in paragraph (b)(1)(i)(B) of this section.

(2) It provides health services without charge or at a substantially reduced rate to persons who are determined by the facility to qualify threrefor under a program of discounted health services. A ''program of discounted health services'' must provide for financial and other objective eligibility criteria and procedures, including notice prior to nonemergency service, that assure effective opportunity for all persons to apply for and obtain a determination of eligibility for such services, including a determination prior to service where requested; *Provided that,* such criteria and procedures are not required where the facility makes all services available to all persons at no or nominal charge.

(c) *Procedures for certification.* To be certified under this section, a facility must submit to the Secretary, in addition to other materials that the Secretary may from time to time require, a complete description of its program(s) of discounted health services, including charging and collection policies of the facility, and eligibility criteria and notice and determination precedures used under its program(s) of discounted services.

(d) *Period of effectiveness.* A certification by the Secretary under this section remains in effect until withdrawn. During the period in which such certification is in effect, the facility must provide uncompensated services in an amount not less than the level applicable under paragraph (b)(1) of this section for each fiscal year. The Secretary may disallow credit under this subpart when the Secretary determines that there has been a material change in any factor upon which certification was based or substantial noncompliance with this subpart. The Secretary may withdraw certification where the change or noncompliance cannot be or has not been adequately remedied or noncompliance otherwise continues.

(e) *Deficits.* (1) Where the compliance level of a facility assisted under title VI of the Act is computed under paragraph (b)(1)(i)(A) of this section as including additional year(s) or a portion of a year, the facility's period of obligation under this subpart shall be extended by such additional period, until certification is withdrawn.

(2) Where a facility has been assessed as having a deficit under § 124.503(b) that has not been made up prior to withdrawal of certification under this section or fails to provide services as required by paragraph (d) of this section, the facility must make up the deficit in accordance with § 124.503(b) following withdrawal of certification.

(Approved by the Office of Management and Budget under control number 0915–0077)

[52 FR 46031, Dec. 3, 1987, as amended at 52 FR 48362, Dec. 21, 1987; 54 FR 52939, Dec. 26, 1989]

§ 124.515 Compliance alternative for community health centers, migrant health centers and certain National Health Service Corps sites.

(a) *Period of effectiveness.* For each fiscal year for which a facility that receives a grant to operate a community health center under section 330 of the Act or a migrant health center under section 329 of the Act is in substantial compliance with the terms and conditions of such grant relating to the provision of services at a discount, the facility shall be certified as having met its annual compliance level in accordance with the requirements of this subpart and shall not be required otherwise to comply with the requirements of this subpart for that fiscal year. This provision also applies to any facility that has signed a memorandum of agreement with the Secretary under section 334 of the Act if the services provided by the National Health Service Corps professional(s) assigned pursuant to that agreement constitute all of the medical services provided by the facility.

(b) *Deficits*—(1) *Title VI-assisted facilities with assessed deficits.* Where a facility assisted under title VI of the Act has been assessed as having a deficit under § 124.503(b) that has not been made up prior to certification under this section, the facility may make up that deficit by either—

(i) Demonstrating to the Secretary's satisfaction that it met the requirements of paragraph (a) of this section

for each year in which a deficit was assessed; or

(ii) Providing an additional period of service under this section on the basis of one (or portion of a) year of certification for each year (or portion of a year) of deficit assessed. The period of obligation applicable to the facility under § 124.501(b) shall be extended until the deficit is made up in accordance with the preceding sentence.

(2) *Title VI-assisted facilities which have not been assessed.* Where any period of compliance under this subpart of a facility assisted under title VI of the Act has not been assessed, the facility will be presumed to have no allowable credit for such period. The facility may either—

(i) Make up such deficit in accordance with paragraph (b)(1) of this section; or

(ii) Submit an independent certified audit, conducted in accordance with procedures specified by the Secretary, of the facility's records maintained pursuant to § 124.510. If the audit establishes to the Secretary's satisfaction that no, or a lesser, deficit exists for the period in question, the facility will receive credit for the period so justified. Any deficit which the Secretary determines still remains must be made up in accordance with paragraph (b)(1) of this section.

(3) *Title XVI-assisted facilities.* (i) A facility assisted under title XVI of the Act which has an assessed deficit which was not made up prior to certification under this section shall make up that deficit in accordance with paragraph (b)(1)(i) of this section. If it cannot make the showing required by that paragraph, it shall make up the deficit when it is no longer certified under this section.

(ii) A facility assisted under title XVI of the Act whose compliance with this subpart has not been completely assessed will be presumed to have no allowable credit for the unassessed period. The facility may make up the deficit by—

(A) Following the procedure of paragraph (b)(3)(i) of this section; or

(B) Submitting an independent certified audit, conducted in accordance with procedures specified by the Secretary, of the facility's records maintained pursuant to § 124.510. If the audit establishes to the Secretary's satisfaction that no, or a lesser, deficit exists for the period in question, the facility will receive credit for the period so justified. Any deficit which the Secretary determines still remains must be made up in accordance with paragraph (b)(3)(i) of this section.

(Approved by the Office of Management and Budget under control number 0915–0077)

[52 FR 46031, Dec. 3, 1987, as amended at 52 FR 48362, Dec. 21, 1987; 54 FR 52939, Dec. 26, 1989]

§ 124.516 Charitable facility compliance alternative.

(a) *Effect of certification.* The Secretary may certify a facility which meets the requirements of paragraphs (b) and (c) of this section as a ''charitable facility.'' A facility which is so certified is not required to comply with this subpart except as otherwise herein provided.

(b) *Criteria for qualification.* A facility may qualify for certification under this section if it meets the criteria of either paragraph (b)(1) or paragraph (b)(2) of this section:

(1)(i) *For facilities that are nursing homes:* It received, for the three most recent fiscal years, no monies directly from patients with incomes up to triple the current poverty line issued by the Secretary pursuant to 42 U.S.C. 9902, exclusive of amounts charged or received for purposes of claiming reimbursement under third party insurance or governmental programs, such as Medicaid or Medicare deductible or coinsurance amounts;

(ii) *For all other facilities.* It received, for the three most recent fiscal years, no monies directly from patients with incomes up to double the current poverty line issued by the Secretary pursuant to 42 U.S.C. 9902, exclusive of amounts charged or received for purposes of claiming reimbursement under third party insurance or governmental programs, such as Medicaid or Medicare deductible or coinsurance amounts; or

(2)(i) It received, for the three most recent fiscal years, at least 10 percent

of its total operating revenue (net patient revenue plus other operating revenue, exclusive of any amounts received, or if not received, claimed, as reimbursement under titles XVIII and XIX of the Social Security Act) from philanthropic sources to cover operating deficits attributable to the provision of discounted services. Philanthropic sources include private trusts, foundations, churches, charitable organizations, state and/or local funding, and individual donors; and either—

(ii) (A) Provides health services without charge or at a substantially reduced rate (exclusive of amounts charged or received for purposes of claiming reimbursement under third party insurance or governmental programs, such as Medicaid or Medicare deductible or coinsurance amounts) to persons who are determined by the facility to qualify therefor under a program of discounted health services. A ''program of discounted health services'' must provide for financial and other objective eligibility criteria and procedures, including notice prior to nonemergency service, that assure effective opportunity for all persons to apply for and obtain a determination of eligibility for such services including a determination prior to service where requested; or

(B) Makes all services of the facility available to all persons at no more than a nominal charge, exclusive of amounts charged or received for purposes of claiming reimbursement under third party insurance or governmental programs, such as Medicaid or Medicare deductible or coinsurance amounts.

(c) *Procedures for certification.* To be certified under this section, a facility must submit to the Secretary, in addition to other materials that the Secretary may from time to time require, copies of the following:

(1) Audited financial statements for the three most recent fiscal years or other documents prescribed by the Secretary, sufficient to show that the facility meets the criteria of paragraph (b)(1) or (b)(2) of this section.

(2)(i) Where the facility claims qualification under paragraph (b)(2)(ii)(A) of this section, a complete description, and documentation where requested, of its program of discounted health services, including charging and collection policies of the facility, and eligibility criteria and notice and determination procedures used under its program(s) of discounted health services.

(ii) Where the facility claims qualification under paragraph (b)(1) or paragraph (b)(2)(ii)(B) of this section, a complete description, and documentation where requested, of its admission, charging, and collection policies.

(d) *Period of effectiveness.* (1) A certification by the Secretary under this section remains in effect until withdrawn. The Secretary may disallow credit under this subpart when the Secretary determines that there has been a material change in any factor upon which certification was based or substantial noncompliance with this subpart. The Secretary may withdraw certification where the change or noncompliance has not been in the Secretary's judgment adequately remedied or otherwise continues.

(2) *Deficits*—(i) *Title VI-assisted facilities with assessed deficits.* Where a facility assisted under title VI of the Act has been assessed as having a deficit under §124.503(b) that has not been made up prior to certification under this section, the facility may make up that deficit by either—

(A) Demonstrating to the Secretary's satisfaction that it met the applicable requirements of paragraph (b) of this section for each year in which a deficit was assessed; or

(B) Providing an additional period of service under this section on the basis of one year (or portion of a year) of certification for each year (or portion of a year) of deficit assessed. The period of obligation applicable to the facility under §124.501(b) shall be extended until the deficit is made up in accordance with the preceding sentence.

(ii) Where any period of compliance under this subpart of a facility assisted under title VI of the Act has not been assessed, the facility will be presumed to have no allowable credit for such period. The facility may either—

(A) Make up such deficit in accordance with paragraph (d)(2)(i) of this section; or

(B) Submit an independent certified audit, conducted in accordance with

procedures specified by the Secretary, of the facility's records maintained pursuant to § 124.510. If the audit establishes to the Secretary's satisfaction that no, or a lesser, deficit exists for the period in question, the facility will receive credit for the period so justified. Any deficit which the Secretary determines still remains must be made up in accordance with paragraph (d)(2)(i) of this section.

(iii) *Title XVI-assisted facilities.* (A) A facility assisted under title XVI of the Act which has an assessed deficit which was not made up prior to certification under this section shall make up that deficit in accordance with paragraph (d)(2)(i)(A) of this section. If it cannot make the showing required by that paragraph, it shall make up the deficit when its certification under this section is withdrawn.

(B) A facility assisted under title XVI of the Act whose compliance with this subpart has not been completely assessed will be presumed to have no allowable credit for the unassessed period. The facility may make up the deficit by—

(*1*) Following the procedure of paragraph (d)(2)(iii)(A) of this section; or

(*2*) Submitting an independent certified audit, conducted in accordance with procedures specified by the Secretary, of the facility's records maintained pursuant to § 124.510. If the audit establishes that no, or a lesser, deficit exists for the period in question, the facility will receive credit for the period so justified. Any deficit which the Secretary determines still remains must be made up in accordance with paragraph (d)(2)(iii)(A) of this section.

[59 FR 44639, Aug. 30, 1994, as amended at 60 16756, FR Mar. 31, 1995]

§ 124.517 Agreements with State agencies.

(a) Where the Secretary finds that it will promote the purposes of this subpart and the State agency is able and willing to do so, the Secretary may enter into an agreement with an agency of a State to assist in administering this subpart in the State. An agreement may be terminated by the Secretary or the State agency on 60 days notice.

(b) Under an agreement the State agency will provide any assistance the Secretary requests in any one or more of the following areas, as set out in the agreement:

(1) Investigation of complaints regarding noncompliance;

(2) Monitoring compliance of facilities with the requirements of this subpart;

(3) Review of reports submitted under § 124.509, including affirmative action plans;

(4) Making initial decisions for the Secretary with respect to compliance, subject to appeal by any party to the Secretary, or review by the Secretary on the Secretary's initiative; and

(5) Application of any sanctions available to it under State law (such as license revocation or termination of State assistance) against facilities determined to be out of compliance with the requirements of this subpart.

(c) Nothing in this subpart precludes any State from taking any action authorized by State law regarding the provision of uncompensated services by facilities in the State as long as the action taken does not prevent the Secretary from enforcing the requirements of this subpart.

[52 FR 46031, Dec. 3, 1987. Redesignated at 59 FR 44639, Aug. 30, 1994]

Subpart G—Community Service

AUTHORITY: Secs. 215, 1525, 1602(6), Public Health Service Act as amended; 58 Stat 690, 88 Stat. 2249, 2259; 42 U.S.C. 216, 300m–4, 300o–1(6).

SOURCE: 44 FR 29379, May 18, 1979, unless otherwise noted.

§ 124.601 Applicability.

The provisions of this subpart apply to any recipient of Federal assistance under title VI or XVI of the Public Health Service Act that has given an assurance that it would make the facility or portion thereof assisted available to all persons residing (and, in the case of title XVI assisted applicants, employed), in the territorial area it serves. This assurance is referred to in this subpart as the ''community service assurance.''

§ 124.602 Definitions.

As used in this subpart:

Act means the Public Health Service Act, as amended.

Facility means the an entity that received assistance under title VI or title XVI of the Act and provided a community service assurance.

Fiscal year means facility's fiscal year.

Secretary means the Secretary of Health and Human Services or his delegatee.

Service area means the geographic area designated as the area served by the facility in the most recent State plan approved by the Secretary under title VI, except that, at the request of the facility, the Secretary may designate a different area proposed by the facility when he determines that a different area is appropriate based on the criteria in 42 CFR 53.1(d).

State agency means the agency of a state fully or conditionally designated by the Secretary as the State health planning and development agency of the State under section 1521 of the Act.

§ 124.603 Provision of services.

(a) *General.* (1) In order to comply with its community service assurance, a facility shall make the services provided in the facility or portion thereof constructed, modernized, or converted with Federal assistance under title VI or XVI of the Act available to all persons residing (and, in the case of facilities assisted under title XVI of the Act, employed) in the facility's service area without discrimination on the ground of race, color, national origin, creed, or any other ground unrelated to an individual's need for the service or the availability of the needed service in the facility. Subject to paragraph (b) (concerning emergency services) a facility may deny services to persons who are unable to pay for them unless those persons are required to be provided uncompensated services under the provisions of Subpart F.

(2) A person is residing in the facility's service area for purposes of this section if the person:

(i) Is living in the service area with the intention to remain there permanently or for an indefinite period;

(ii) Is living in the service area for purposes of employment; or

(iii) Is living with a family member who resides in the service area.

(b) *Emergency services.* (1) A facility may not deny emergency services to any person who resides (or, in the case of facilities assisted under title XVI of the Act, is employed) in the facility's service area on the ground that the person is unable to pay for those services.

(2) A facility may discharge a person that has received emergency services, or may transfer the person to another facility able to provide necessary services, when the appropriate medical personnel determine that discharge or transfer will not subject the person to a substantial risk of deterioration in medical condition.

(c) *Third party payor programs.* (1) The facility shall make arrangements, if eligible to do so, for reimbursement for services with:

(i) Those principal State and local governmental third-party payors that provide reimbursement for services that is not less than the actual costs, as determined in accordance with accepted cost accounting principles; and

(ii) Federal governmental third-party programs, such as medicare and medicaid.

(2) The facility shall take any necessary steps to insure that admission to and services of the facility are available to beneficiaries of the governmental programs specified in paragraph (c)(1) of this section without discrimination or preference because they are beneficiaries of those programs.

(d) *Exclusionary admissions policies.* A facility is out of compliance with its community service assurance if it uses an admission policy that has the effect of excluding persons on a ground other than those permitted under paragraph (a) of this section. Illustrative applications of this requirement are described in the following paragraphs:

(1) A facility has a policy or practice of admitting only those patients who are referred by physicians with staff privileges at the facility. If this policy or practice has the effect of excluding persons who reside (or for title XVI facilities, are employed) in the community from the facility because they do

not have a private family doctor with staff privileges at the facility, the facility would not be in compliance with its assurance. The facility is not required to abolish its staff physician admissions policy as a usual method for admission. However, to be in compliance with its community service assurance it must make alternative arrangements to assist area residents who would otherwise be unable to gain admission to obtain services available in the facility. Examples of alternative arrangements a facility might use include:

(i) Authorizing the individual's physician, if licensed and otherwise qualified, to treat the patient at the facility even though the physician does not have staff privileges at the facility;

(ii) For those patients who have no physician, obtaining the voluntary agreement of physicians with staff privileges at the facility to accept referrals of such patients, perhaps on a rotating basis;

(iii) If an insufficient number of physicians with staff privileges agree to participate in a referral arrangement, requiring acceptance of referrals as a condition to obtaining or renewing staff privileges;

(iv) Establishing a hospital-based primary care clinic through which patients needing hospitalization may be admitted; or

(v) Hiring or contracting with qualified physicians to treat patients who do not have private physicians.

(2) A facility, as required, is a qualified provider under the title XIX medicaid program, but few or none of the physicians with staff privileges at the facility or in a particular department or sub-department of the facility will treat medicaid patients. If the effect is that some medicaid patients are excluded from the facility or from any service provided in the facility, the facility is not in compliance with its community service assurance. To be in compliance a facility does not have to require all of its staff physicians to accept medicaid. However, it must take steps to ensure that medicaid beneficiaries have full access to all of its available services. Examples of steps that may be taken include:

(i) Obtaining the voluntary agreement of a reasonable number of physicians with staff privileges at the facility and in each department or sub-department to accept referral of medicaid patients, perhaps on a rotating basis;

(ii) If an insufficient number of physicians with staff privileges agree to participate in a referral arrangement, requiring acceptance of referrals as a condition to obtaining or renewing staff privileges;

(iii) Establishing a clinic through which medicaid beneficiaries needing hospitalization may be admitted; or

(iv) Hiring or contracting with physicians to treat medicaid patients.

(3) A facility requires advance deposits (pre-admission or pre-service deposits) before admitting or serving patients. If the effect of this practice is that some persons are denied admission or service or face substantial delays in gaining admission or service solely because they do not have the necessary cash on hand, this would constitute a violation of the community service assurance. While the facility is not required to forego the use of a deposit policy in all situations, it is required to make alternative arrangements to ensure that persons who probably can pay for the services are not denied them simply because they do not have the available cash at the time services are requested. For example, many employed persons and persons with other collateral do not have savings, but can pay hospital bills on an installment basis, or can pay a small deposit. Such persons may not be excluded from admission or denied services because of their inability to pay a deposit.

§ 124.604 Posted notice.

(a) The facility shall post notices, which the Secretary supplies in English and Spanish, in appropriate areas of the facility, including but not limited to the admissions area, the business office and the emergency room.

(b) If in the service area of the facility the ''usual language of households'' of ten percent or more of the population, according to the most recent figures published by the Bureau of the

Census, is other than English or Spanish, the facility shall translate the notice into that language and post the translated notice on signs substantially similar in size and legibility to, and posted with, those supplied under paragraph (a) of this section.

(c) The facility shall make reasonable efforts to communicate the contents of the posted notice to persons who it has reason to believe cannot read the notice.

§ 124.605 Reporting and record maintenance requirements.

(a) *Reporting requirements*—(1) *Timing of reports.*(i) A facility shall submit to the Secretary a report to assist the Secretary in determining compliance with this subpart once every three fiscal years, on a schedule to be prescribed by the Secretary. The report required by this section shall be submitted not later than 90 days after the end of the fiscal year, unless a longer period is approved by the Secretary for good cause shown.

(ii) A facility shall also submit the required report whenever the Secretary determines, and so notifies the facility in writing, that a report is needed for proper administration of the program. In this situation the facility shall submit the report specified in this section for the filing of reports, within 90 days after receiving notice from the Secretary, or within 90 days after the close of the fiscal year, whichever is later.

(2) *Content of report.* The report must be submitted on a form prescribed by the Secretary and must include information that the Secretary prescribes to permit a determination of whether a facility has met its obligations under this subpart.

(3) The facility shall provide a copy of any report to the HSA for the area when submitting it to the Secretary.

(4) *Institution of suit.* Not later than 10 days after being served with a summons or complaint, the applicant shall notify the Regional Health Administrator for the Region of HHS in which it is located of any legal action brought against it alleging that it has failed to comply with the requirements of this subpart.[1]

(b) *Record maintenance requirements.* (1) A facility shall maintain, make available for public inspection consistent with personal privacy, and provide to the Secretary on request, any records necessary to document its compliance requirements of this subpart in any fiscal year, including documents from which information required to be reported under paragraph (a) of this section was obtained. A facility shall maintain these records until 180 days following the close of the Secretary's investigation under § 124.606(a).

§ 124.606 Investigation and enforcement.

(a) *Investigations.* (1) The Secretary periodically investigates the compliance of facilities with the requirements of this subpart, and investigates complaints.

(2)(i) A complaint is filed with the Secretary on the date on which the following information is received in the Office of the Regional Health Administrator for the Region of HHS in which the facility is located:

(A) The name and address of the person making the complaint or on whose behalf the complaint is made;

(B) The name and location of the facility;

(C) The date or approximate date on which the event complained of occurred, and

(D) A statement of what actions the complainant considers to violate the requirements of this subpart.

(ii) The Secretary promptly provides a copy of the complaint to each facility named in the complaint.

(3) When the Secretary investigates a facility, the facility shall provide to the Secretary on request any documents, records and other information concerning its operations that relate to the requirements of this subpart.

(4) The Act provides that if the Secretary dismisses a complaint or the Attorney General has not brought an action for compliance within six months from the date on which the complaint is filed, the person filing it may bring

[1] The addresses of the Regional Office of HHS are set out in 45 CFR 5.31.

a private action to effectuate compliance with the assurance. If the Secretary determines that he will be unable to issue a decision on a complaint or otherwise take appropriate action within the six month period, he may, based on priorities for the disposition of complaints that are established to promote the most effective use of enforcement resources, or on the request of the complainant, dismiss the complaint without a finding as to compliance prior to the end of the six month period, but no earlier than 45 days after the complaint is filed.

(b) *Enforcement.* (1) If the Secretary finds, based on his investigation under paragraph (a) of this section, that a facility did not comply with the requirements of this subpart, he may take any action authorized by law to secure compliance, including but not limited to voluntary agreement or a request to the Attorney General to bring an action against the facility for specific performance.

(2) If the Secretary finds, based on his investigation under paragraph (a) of this section, that a facility has limited the availability of its services in a manner proscribed by this subpart, he may, in addition to any other action that he is authorized to take in accordance with the Act, require the facility to establish an effective affirmative action plan that in his judgment is designed to insure that its services are made available in accordance with the requirements of this subpart.

§ 124.607 Agreements with State agencies.

(a) Where the Secretary finds that it will promote the purposes of this subpart, and the State agency is able and willing to do so, he may enter into an agreement with the State agency for the State agency to assist him in administering this subpart in the State.

(b) Under an agreement, the State agency will provide the Secretary with any assistance he requests in any one or more of the following areas, as set out in the agreement:

(1) Investigation of complaints of noncompliance;

(2) Monitoring the compliance of facilities with the requirements of this subpart;

(3) Review of affirmative action plans submitted under § 124.606(b);

(4) Review of reports submitted under § 124.605;

(5) Making initial decisions for the Secretary with respect to compliance, subject to appeal by any party to the Secretary or review by the Secretary on his own initiative; and

(6) Application of any sanctions available to it under State law (such as license revocation or termination of State assistance) against facilities determined to be out of compliance with the requirements of this subpart.

(c) A State agency may use funds received under section 1525 of the Act to pay for expenses incurred in the course of carrying out this agreement.

(d) Nothing in this subpart precludes any State from taking any action authorized by State law regarding the provision of services by any facility in the State as long as the action taken does not prevent the Secretary from enforcing the requirements of this subpart.

APPENDIX TO SUBPART G—INTERIM PROCEDURES AND CRITERIA FOR REVIEW BY HEALTH SYSTEMS AGENCIES OF APPLICATIONS UNDER SECTION 1625 OF THE PUBLIC HEALTH SERVICE ACT

In performing reviews under section 1513 (e) of the Public Health Service Act (42 U.S.C. 3001–2(c)) of applications for grants under section 1625 of the Act, health systems agencies shall use the procedures and criteria stated below. A health systems agency may not conduct such reviews until the procedures and criteria to be used in conducting the reviews have been adopted by the agency and published in newspapers of general circulation within the health service area or other public information channels.

PROCEDURES

The procedures adopted and utilized by a health systems agency for conducting reviews of applications for grants under section 1625 of the Act shall include at least the following: 1. Except as provided below, notification of the beginning of a review within seven days of the receipt by the health systems agency of the application. Where the application was received by the health systems agency prior to publication of this subpart in the FEDERAL REGISTER, notification must be made within seven days of the date on which the health systems agency adopts its procedures and criteria. The notification shall include the proposed schedule for the

review, the period within which a public hearing during the course of the review may be requested (which must be a reasonable period from the transmittal of the written notification required above), and the manner in which notification will be provided of the time and place of any hearings so requested. Written notification to members of the public may be provided through newspapers of general circulation in the area and public information channels. Notification to the applicant whose application is being reviewed and all other applicants for assistance under section 1625 of the Act providing health service in the health service area shall be by mail (which may be as part of a newsletter). The health systems agency must simultaneously notify the Federal funding agency of the beginning of the review.

2. Schedules for reviews which provide that such reviews shall not exceed 60 days from the date of notification made in accordance with paragraph 1 of this section to the date of the written findings made in accordance with paragraph 4 of this section. This does not preclude a health systems agency from conducting its review in less than 60 days.

3. Provision for applicants to submit to the health systems agency (in such form and manner as the agency shall require) such information as the agency deems necessary in order to conduct its review.

4. Written findings which state the basis for the approval or disapproval of the application by the health systems agency. Such findings shall be sent to the applicant, the State health planning and development agency (or agencies), and the Secretary, and shall be available to other upon request.

5. Access by the general public to all such applications reviewed by the health systems agency and to all other written materials pertinent to the agency review.

6. Public hearings in the course of agency review, if requested by one or more persons directly affected by the review. For purposes of this paragraph, a ''person directly affected by the review'' is as defined in 42 CFR 122.306 (a)(7).

CRITERIA

The specific criteria adopted and utilized by a health systems of this agency to conduct reviews of applications for grants under section 1625 of the Act shall include at least the following:

1. The relationship of the health services of the facility to the applicable health systems plan and annual implementation plan.

2. The relationship of the health services of the facility to the long-range development plan (if any) of the applicant.

3. The need that the population served or to be served by the facility has for the health services of such facility.

4. The availability of alternative, less costly, or more effective methods of providing the health services which the facility provides.

5. The relationship of the health services provided by the facility to the existing health care system of the area.

6. The availability of resources (including health manpower, management personnel, and funds for capital and operating needs) for the provision of services by the facility and the availability of alternative uses of such resources for the provision of other health services.

7. The special needs and circumstances of those entities which provide a substantial portion of their services or resources, or both, to individuals not residing in the health service area in which the entities are located or in adjacent health service areas. Such entities may include medical and other health professions schools, multidisciplinary clinics, and other speciality centers.

8. The special needs and circumstances of health maintenance organizations for which assistance may be provided under title XIII.

9. The costs and methods of the proposed construction or modernization, including the costs and methods of energy provision.

10. The probable impact of the project reviewed on the applicant's costs of providing health services.

Subpart H—Recovery of Grant Funds

AUTHORITY: Secs. 609 and 1622 of the Public Health Service Act as amended 98 Stat. 112 (42 U.S.C. 291i and 300s–1a).

SOURCE: 51 FR 7939, Mar. 7, 1986, unless otherwise noted.

§ 124.701 Applicability.

The provisions of this subpart apply to facilities with respect to which grant funds were paid for construction or modernization—

(a) Under title VI or XVI of the Public Health Service Act; or

(b) Pursuant to the authority of the Secretary under any of the following statutes:

(1) The Public Works Acceleration Act of 1962, Pub. L. 87–658 (42 U.S.C. 2641 *et seq.*);

(2) The District of Columbia Medical Facilities Construction Act of 1968, 82 Stat. 631 (Pub. L. 90–457);

(3) The Appalachian Regional Development Act of 1965, as amended (40 U.S.C. App.).

§ 124.702 Definitions.

As used in this subpart—

Act means the Public Health Service Act.

Department means the Department of Health and Human Services.

Expected useful life means the period of time during which the structure may reasonably be expected to perform the function for which it was designed or intended.

Facility means a facility with respect to which grant funds were paid under any of the authorizations listed in § 124.701.

Fiscal year means the facility's fiscal year.

Nonprofit, as applied to any facility, means a facility that is owned and operated by one or more nonprofit corporations or associations no part of the net earnings of which inures, or may lawfully inure, to the benefit of any private shareholder or individual.

Secretary means the Secretary of Health and Human Services and any other officer or employee of the Department of Health and Human Services to whom the authority involved has been delegated.

State agency means (1) in the case of a facility with respect to which a grant was made under title VI of the Public Health Service Act or any of the statutes listed in § 124.701(b), the State agency designated pursuant to section 604 of the Public Health Service Act or its successor agency, and (2) in the case of a facility with respect to which a grant was made under title XVI of the Public Health Service Act, the State health planning and development agency designated pursuant to title XV of the Public Health Service Act.

Then value means the value of the facility on the date the facility is sold, transferred or ceases to be used for a permissible use as described in § 124.704.

§ 124.703 Federal right of recovery.

(a) If any facility is at any time within 20 years after the completion of the grant-assisted construction or modernization sold or transferred to any entity which is either not qualified for a grant under the statute pursuant to which the grant was awarded or not approved as a transferee by the State agency, the United States shall be entitled to recover on the basis of joint and several liability from any transferor, transferee, or successive transferee of the facility an amount determined in accordance with this subpart.

(b) If any facility at any time within 20 years after the completion of the grant-assisted construction or modernization ceases to be a public or other non-profit facility that would have been eligible for a grant under the statute pursuant to which the grant was awarded, the United States shall be entitled to recover from the owners of the facility an amount determined in accordance with this subpart.

§ 124.704 Notification of sale, transfer, or change of use.

(a) The transferor of a facility that is sold or transferred as described in § 124.703(a), or the owner of a facility which ceases to be a public or other nonprofit facility as described in § 124.703(b), shall provide the Secretary written notice of such sale, transfer, or other change not later than 10 days after the date on which the sale, transfer, or change occurs.

(1) *Transfer.* For purposes of this subpart, a transfer occurs when a facility is conveyed to another entity through lease, merger, bankruptcy, foreclosure, or other arrangement.

(2) *Cease to be.* For purposes of this subpart,

(i) A facility ''ceases to be'' a facility for which a grant could have been made under the statute pursuant to which the grant was awarded when it is no longer operated as such a facility; and

(ii) A facility ''ceases to be a public or nonprofit facility'' when an entity that is not a public or other non-profit corporation or association assumes management responsibilities with respect to the facility which, in the Secretary's judgment, are so pervasive as to constitute operation of the facility. The manager will not be deemed to be the operator of the facility if the management agreement contains both of the following provisions:

> The Board of Directors of the facility retains authority to terminate the agreement at any time upon reasonable notice to the contractor.
>
> No employee of the contractor may be a member of the facility's Board of Directors.

In the absence of either of these provisions the Secretary will consider the

degree of control granted to the managing organization over patient admission, determination of what services will be provided, and charges for services provided in the facility.

(b) *Content of Notice.* The notice required by paragraph (a) of this section shall be sent to the Secretary by certified mail, and shall contain or be accompanied by

(1) The date of the sale, transfer, or other event that gives rise to the notice;

(2) Copies of any sales contracts, lease agreements, management contracts or other documents pertinent to the event giving rise to the notice;

(3) Estimates of current assets, current liabilities, book value of equipment, the expected value of land on the new owner's books, and the remaining depreciation for all fixed assets involved in the transaction calculated on a straight line basis using commonly adopted expected useful lifetimes.

(c) *Failure to provide notice.* Failure to provide the information required by paragraph (b) of this section, will be considered failure to provide the notice required by this section. In any case in which such information has not been provided, the Secretary will, promptly upon receiving an incomplete notice or otherwise discovering that a sale, transfer or other event giving rise to a recovery may have occurred, send a letter to the owner of the facility requesting the information needed to calculate a recovery amount.

(Approved by the Office of Management and Budget under control number 0915–0099)

§ 124.705 Amount of recovery.

(a) Except as provided in § 124.706, the amount that the United States shall be entitled to recover under this subpart is that amount bearing the same ratio to the then value of so much of the facility as constituted an approved project (or projects) as the amount of Federal participation bore to the cost of the construction or modernization under such project (or projects).

(b) The then value of the facility will be based on:

(1) The transaction value in the case of an arms-length sale or transfer, or

(2) A depreciated reproduction value in the absence of an arms-length sale or transfer or if the buyer fails to provide, within 60 days after the date of the Secretary's letter described in § 124.704(c), the information which, in the judgment of the Secretary, is necessary to establish, adjust, and apportion a transaction value. As used in this section, ''transaction value'' means in the case of a sale, the sale price, and in the case of a lease, the value of the lease plus the residual value of the facility at the termination of the lease (i.e., the reproduction value or, if appropriate, an alternative use value).

(c) The transaction value will be adjusted to account for the purchase or lease of other assets and the assumption of liabilities associated with the transaction. To determine the amount of Federal recovery, the adjusted value will be apportioned to the grant-aided assets by the ration of the remaining useful lifetime values of those assets to the sum of the remaining useful lifetime values of all assets not previously accounted for in adjusting the transaction value.

(d) A depreciated reproduction value will be established by calculating a reproduction value using construction cost indexes or current costs per square foot for construction, depending on which is more relevant to the type of construction associated with the grant. This reproduction value will then be adjusted by the ratio of the remaining useful life to the total useful life for the assets involved.

(e) In calculating the recovery amount, the Secretary will include as Federal participation any grant assistance received by the facility under an authority listed in § 124.701 and any assistance supplementary to that assistance received for the construction or modernization of the facility under the Public Works and Economic Development Act of 1965 (42 U.S.C. 3121, *et seq.*) or the Local Public Works Capital Development Act of 1976 (Pub. L. 94–369).

§ 124.706 Calculation of interest.

(a) In addition to the amount of recovery calculated under § 124.705, the United States shall be entitled to recover interest on such amount in accordance with this section at the rate determined by the Secretary based on

the average of the bond equivalent of the weekly ninety-day U.S. Treasury bill auction rate for the quarter previous to the quarter in which interest begins to accrue under this section.

(1) *Change of status before July 18, 1984.* For facilities that were sold or transferred or which ceased to be public or other nonprofit facilities before July 18, 1984, interest will be charged beginning August 17, 1984, or 180 days after the date of such sale, transfer or other, whichever is later, and ending on the date the amount the United States is entitled to recover is collected.

(2) *Change of status after July 17, 1984.* For facilities that are sold or transferred or which cease to be public or other nonprofit facilities after July 17, 1984, interest will be charged beginning 180 days after receipt by the Department of the notice required under § 124.704; *Provided,* That if such notice is not provided as prescribed, interest will be charged beginning on the date of the sale, transfer, or change of use, and ending on the date the amount which the United States is entitled to recover is collected.

(b) The Secretary may waive interest charges that result from delays caused solely by the Department.

§ 124.707 Waiver of recovery where facility is sold or transferred to a proprietary entity.

(a) *Conditions of the waiver.* The Secretary may waive the recovery rights of the United States arising under § 124.703(a) if the entity to which the facility was sold or transferred:

(1) Has filed a written request for the waiver within the time limits prescribed by this section;

(2) Has established an irrevocable trust in accordance with this section, in an amount equal to the greater of the amount that would otherwise have been recovered pursuant to § 124.705 (including accrued interest as calculated under § 124.706) or twice the cost of the remaining uncompensated services obligation of the facility as of the date of the change of status, that will be used by the entity only to provide services to those unable to pay in accordance with the requirements of subpart F of this part; and

(3) Has agreed to comply with the community service regulations set out in subpart G of this part.

(b) *Procedures for obtaining waiver.* (1) Within 30 days after the date of receipt of the information described in § 124.704(b), the Secretary will send a letter to the new owner of the facility advising of the United States' right of recovery and the opportunity to obtain a waiver. For the purpose of advising the new owner of the amount to be placed in the irrevocable trust should the owner wish to obtain a waiver, the letter will also state the dollar amount of the remaining uncompensated care obligation and the amount that would be due under § 124.705, computed as follows:

(i) *Computation of uncompensated care obligation.* (A) For a facility which changes status before the date that subpart F of this part is effective for the facility, the remaining uncompensated services obligation is zero.

(B) For a facility which changes status after the date that subpart F of this part is effective for the facility, the Secretary will multiply the annual compliance level, computed under the 10% method specified in 42 CFR 124.503(a)(1)(ii), for the fiscal year in which the change of status occurs times the number of years remaining in the facility's uncompensated services obligation. From this amount, the Secretary will subtract amounts of excess or add amounts of deficit for each fiscal year prior to the change of status for which the Secretary has previously conducted an audit of uncompensated services accounts. Excess and deficits will be adjusted by the percent change in the National Consumer Price Index for Medical Care between the year in which the excess or deficit occurred and the year in which the status change occurred. For each fiscal year prior to the change of status which the Secretary has not audited, the Secretary will add to the remaining obligation an amount equal to the annual compliance level in each such year adjusted by the percent change in the National Consumer Price Index for Medical Care between that year and the year of the status change. The amount computed as the total remaining obligation will then be multiplied by two.

If the transferee chooses to accept the Secretary's calculation, no further assessments will be made of uncompensated care provided prior to the change of status date. If the transferee does not accept the calculation, the transferor or transferee may hire, and may charge against the irrevocable trust established under this section, an independent auditor to certify the compliance level and any excess or deficit for the period from May 18, 1979, up to and including the date of the change of status, using standard Departmental procedures supplemented with instructions provided by the Secretary, and submit the results in accordance with paragraph (b)(2)(ii) of this section. The audit may be conducted for any years *not* included in a previous site assessment conducted by the Department. If the Secretary agrees that a change is appropriate, the Secretary will use this information to adjust the calculation as set out in paragraph (b)(3) of this section. If the independent auditor certifies that qualified care was rendered either at the facility or at a replacement facility operated by the transferee between the date of the change of status and the date of establishment of the trust, and the Secretary agrees, the post transfer level of care shall not affect the calculation of the total remaining uncompensated care obligation to be doubled, but instead shall be recognized as a credit to be drawn from the trust as provided in paragraph (c)(1)(ii) of this section. In the case of a facility with respect to which a grant was made under title XVI of the Act, the remaining period of obligation will be the remainder of the expected useful life of the facility, as follows: 40 years for buildings, 30 years for additions, 20 years for building renovations, 20 years for fixed equipment and 12 years for major movable equipment.

(ii) *Computation of recovery amount.* The Secretary will determine the recovery amount as provided in §124.705.

(2) Within 60 days following the date of the Secretary's letter provided pursuant to paragraph (b)(1) of this section, the owner of the facility shall notify the Secretary in writing that it either:

(i) Accepts the trust fund amount for the waiver as offered by the Secretary;

(ii) Provides a detailed statement of an alternative determination of the recovery amount or an independent audit of the remaining uncompensated services obligation as described in paragraph (b)(1)(i) of this section; or

(iii) Does not seek a waiver under §124.707. Failure to provide a timely response to the Secretary under this subparagraph will be considered an election not to seek the waiver.

(3) Within 30 days following the receipt of the owner's views concerning the calculation, and after considering those views, the Secretary will send a final letter providing the Secretary's determination of twice the remaining uncompensated care obligation and the recovery amount under §124.705. The amount to be placed in the irrevocable trust will be the higher of those two figures. (See paragraph (a)(2) of this section.)

(4) Within 30 days of the date of the final letter, the owner of the facility shall notify the Secretary in writing whether or not it accepts the terms of the waiver. Failure to provide timely notice to the Secretary under this subparagraph will be considered an election not to accept the waiver.

(c) *Establishment of the trust.* (1) Within 60 days of the date of its acceptance of a waiver under paragraph (b)(2) or (b)(4) of this section, the owner shall begin delivering services to those unable to pay in accordance with subpart F of this part under an irrevocable trust established in the amount calculated pursuant to paragraph (b) of this section. *Provided,* That

(i) The owner shall provide a copy of the trust documents to the Secretary and no trust shall be considered established until the trust documents have been approved by the Secretary; and

(ii) The owner may credit against the trust any uncompensated services provided in accordance with subpart F of this part between the date of the change of status of the facility and the establishment of the trust. For an owner to receive the credit before the establishment of the trust and deposit of funds therein, the auditor's report covering the post-transfer period shall be submitted with the notification of acceptance of the waiver, and in any event, not later than 30 days from the

date of the Secretary's final letter described in paragraph (b)(3) of this section. Within 30 days following the receipt of the auditor's report, the Secretary will notify the owner of the allowable credit, if any. If the auditor's report is not timely submitted, the trust must be established and fully funded, in accordance with the time limits imposed by paragraph (c)(1) of this section, and the Secretary will notify the owner of the allowable credit, if any, within 30 days of the date of the establishment of the trust or within 30 days of the receipt of the report, whichever is later.

(2) The trust shall be administered by a Trustee who is neither an employee of the transferee nor an employee of a subsidiary or of the parent institution of the transferee.

(3) The trust shall provide that the trust corpus and income may be invested only in U.S. Government or U.S. Government insured securities.

(d) *Use of the trust.* The corpus and income of the irrevocable trust shall be used to pay for the costs of uncompensated services, which may include reasonable costs of establishing and administering the trust and the cost of the independent audit described in paragraph (b)(1)(i) of this section, until the trust is exhausted.

(Approved by the Office of Management and Budget under control number 0915–0099)

§ 124.708 Waiver of recovery—good cause for other use of facility.

The Secretary may for good cause waive the recovery rights of the United States arising under § 124.703(b). In determining whether there is good cause under this section for releasing the applicant or other owner of the facility from its obligation, the Secretary will take into consideration the extent to which:

(a) The facility will be devoted by the applicant or other owner to use for another public or nonprofit purpose whch will promote the purpose of the Act;

(b) There are reasonable assurances that for the remainder of the 20-year period other public or nonprofit facilities not previously utilized for the purpose for which the facility was constructed will be so utilized and are substantially equivalent in nature and purpose.

(c) The facility has been acquired from an agency of the United States (e.g., the Federal Housing Administration under its mortgage insurance commitment program) which has made a reasonable effort to dispose of it for operation as a public or nonprofit health care facility.

[51 FR 7939, Mar. 7, 1986, as amended at 57 FR 8272, Mar. 9, 1992]

§ 124.709 Withdrawal of waiver.

(a) Any waiver granted under this subpart is conditioned upon the recipient of the waiver carrying out the obligations imposed by § 124.707 or § 124.708 as applicable.

(b) The Secretary will monitor compliance with the community service and uncompensated care obligations of any entity that receives a waiver.

(c) Should a recipient of a waiver fail to comply with the applicable conditions, the Secretary will withdraw the waiver and seek recovery based on the value of the facility on the date the right of recovery first arose under § 124.703.

(d) No waiver will be withdrawn until the recipient has been notified in writing by the Secretary of the noncompliance and has failed to take corrective action within 90 days after the date of such notice.

(e) Should the waiver be withdrawn, the amount of the Government's recovery will be the amount set out in the Secretary's determination letter as described in § 124.707 (b)(1) or (b)(3) as applicable plus interest from the date of the notification sent in accordance with paragraph (d) of this section.

PARTS 125—399 [RESERVED]

CHAPTERS II—III [RESERVED]