AUTHENTICATED
U.S. GOVERNMENT
INFORMATION
GPO

Title 49—Transportation

(This book contains parts 1 to 99)

EDITORIAL NOTE: Other regulations issued by the Department of Transportation appear in 14 CFR chapters I and II, 23 CFR, 33 CFR chapters I and IV, 44 CFR chapter IV, 46 CFR chapters I and II, 48 CFR chapter 12, and 49 CFR chapters I through VI.

Part

SUBTITLE A—OFFICE OF THE SECRETARY OF TRANSPORTATION 1

Subtitle A—Office of the Secretary of Transportation

Part		Page
1	Organization and delegation of powers and duties	5
3	Official seal	53
5	Rulemaking procedures	54
6	Implementation of Equal Access to Justice Act in agency proceedings	57
7	Public availability of information	62
8	Classified information: Classification/declassification/access	77
9	Testimony of employees of the Department and production of records in legal proceedings	85
10	Maintenance of and access to records pertaining to individuals	89
11	Protection of human subjects	103
17	Intergovernmental review of Department of Transportation programs and activities	114
18	Uniform administrative requirements for grants and cooperative agreements to State and local governments	117
19	Uniform administrative requirements for grants and agreements with institutions of higher education, hospitals, and other non-profit organizations	146
20	New restrictions on lobbying	174
21	Nondiscrimination in federally-assisted programs of the Department of Transportation—Effectuation of title VI of the Civil Rights Act of 1964	186
23	Participation by disadvantaged business enterprise in airport concessions	197
24	Uniform relocation assistance and real property acquisition for Federal and federally assisted programs	206
25	[Reserved]	
26	Participation by disadvantaged business enterprises in Department of Transportation financial assistance programs	245

Part		Page
27	Nondiscrimination on the basis of disability in programs and activities receiving or benefitting from Federal financial assistance	284
28	Enforcement of nondiscrimination on the basis of handicap in programs or activities conducted by the Department of Transportation	296
29	Governmentwide debarment and suspension (nonprocurement) and governmentwide requirements for drug-free workplace (grants)	303
30	Denial of public works contracts to suppliers of goods and services of countries that deny procurement market access to U.S. contractors	322
31	Program fraud civil remedies	327
37	Transportation services for individuals with disabilities (ADA)	343
38	Americans with Disabilities Act (ADA) accessibility specifications for transportation vehicles	520
40	Procedures for transportation workplace drug testing programs	558
41	Seismic safety	605
71	Standard time zone boundaries	607
79	Medals of honor	612
80	Credit assistance for surface transportation projects	613
89	Implementation of the Federal Claims Collection Act	618
91	International air transportation fair competitive practices	625
92	Recovering debts to the United States by salary offset	627
93	Aircraft allocation	637
95	Advisory committees	637
98	Enforcement of restrictions on post-employment activities	640
99	Employee responsibilities and conduct	642

APPENDIX TO SUBTITLE A—UNITED STATES RAILWAY ASSOCIATION—EMPLOYEE RESPONSIBILITIES AND CONDUCT 645

PART 1—ORGANIZATION AND DELEGATION OF POWERS AND DUTIES

Subpart A—General

Sec.
1.1 Purpose.
1.2 Definitions.
1.3 Organization of the Department.
1.4 General responsibilities.

Subpart B—Office of the Secretary

1.21 Purpose.
1.22 Structure.
1.23 Spheres of primary responsibility.
1.24 Authority.
1.25 Relationships.
1.26 Secretarial succession.

Subpart C—Delegations

1.41 Purpose.
1.42 Exercise of authority.
1.43 General limitations and reservations.
1.44 Reservation of authority.
1.45 Delegations to all Administrators.
1.46 Delegations to Commandant of the Coast Guard.
1.47 Delegations to Federal Aviation Administrator.
1.48 Delegations to Federal Highway Administrator.
1.49 Delegations to Federal Railroad Administrator.
1.50 Delegation to National Highway Traffic Safety Administrator.
1.51 Delegations to Urban Mass Transportation Administrator.
1.52 Delegations to Saint Lawrence Seaway Development Corporation Administrator.
1.53 Delegations to the Administrator of the Research and Special Programs Administration.
1.54 Delegations to all Secretarial Officers.
1.55 Delegations to Deputy Secretary.
1.56 Delegations to the Assistant Secretary for Transportation Policy.
1.56a Delegations to the Assistant Secretary for Aviation and International Affairs.
1.56b Delegations to the Designated Senior Career Official, Office of the Assistant Secretary for Aviation and International Affairs.
1.57 Delegations to General Counsel.
1.57a Delegations to Deputy General Counsel.
1.57b Delegations to the Assistant General Counsel for Environmental, Civil Rights, and General Law.
1.58 Delegations to Assistant Secretary for Budget and Programs.
1.59 Delegations to Assistant Secretary for Administration.
1.59a Redelegations by the Assistant Secretary for Administration.
1.60 Delegations to the Inspector General.
1.61 Delegations to Assistant Secretary for Governmental Affairs.
1.62 Delegations to the Director of Small and Disadvantaged Business Utilization.
1.63 Delegations to Assistant to the Secretary and Director of Public Affairs.
1.64 Delegations to the Director, Transportation Administrative Service Center.
1.65 Authority to classify information.
1.66 Delegations to Maritime Administrator.
1.67 Delegations to Maritime Subsidy Board.
1.68 [Reserved]
1.69 Delegations to the Director of Intelligence and Security.
1.70 Delegations to the Director of the Departmental Office of Civil Rights.
1.71 Delegations to the Director of the Bureau of Transportation Statistics.
1.72 Delegations to the Office of the Chief Information Officer.
APPENDIX A TO PART 1—DELEGATIONS AND REDELEGATIONS BY SECRETARIAL OFFICERS

AUTHORITY: 49 U.S.C. 2104(a); Pub. L. 101–552; 28 U.S.C. 2672, 31 U.S.C. 3711(a)(2), 46 U.S.C. 2104(a).

SOURCE: Amdt. 1–113, 40 FR 43901, Sept. 24, 1975, unless otherwise noted.

Subpart A—General

§ 1.1 Purpose.

This part describes the organization of the Department of Transportation and provides for the performance of duties imposed upon, and the exercise of powers vested, in the Secretary of Transportation by law.

§ 1.2 Definitions.

As used in this part, *Administrator* includes:

(a) The Coast Guard Commandant.

(b) The Federal Aviation Administrator.

(c) The Federal Highway Administrator.

(d) The Federal Railroad Administrator.

(e) The National Highway Traffic Safety Administrator.

(f) The Urban Mass Transportation Administrator.

(g) The Administrator of the St. Lawrence Seaway Development Corporation.

(h) The Research and Special Programs Administrator.

(i) The Maritime Administrator.

(j) The Director of the Bureau of Transportation Statistics.

[Amdt. 1–113, 40 FR 43901, Sept. 24, 1975, as amended by Amdt. 1–157, 45 FR 83403, Dec. 18, 1980; Amdt. 1–164, 46 FR 47458, Sept. 28, 1981; Amdt. 1–270, 60 FR 30196, June 8, 1995]

§ 1.3 Organization of the Department.

(a) The Secretary of Transportation is the head of the Department.

(b) The Department is comprised of the Office of the Secretary and the following operating elements, the heads of which report directly to the Secretary:

(1) The U.S. Coast Guard, headed by the Commandant.

(2) The Federal Aviation Administration, headed by the Administrator.

(3) The Federal Highway Administration, headed by the Administrator.

(4) The Federal Railroad Administration, headed by the Administrator.

(5) The National Highway Traffic Safety Administration, headed by the Administrator.

(6) The Urban Mass Transportation Administration, headed by the Administrator.

(7) The St. Lawrence Seaway Development Corporation, headed by the Administrator.

(8) The Research and Special Programs Administration, headed by the Administrator.

(9) The Maritime Administration, headed by the Administrator and including within it the Maritime Subsidy Board composed of the Maritime Administrator, the Deputy Maritime Administrator, and the Chief Counsel of the Maritime Administration.

(10) The Bureau of Transportation Statistics, headed by the Director.

[Amdt. 1–113, 40 FR 43901, Sept. 24, 1975, as amended by Amdt. 1–157, 45 FR 83403, Dec. 18, 1980; Amdt. 1–164, 46 FR 47458, Sept. 28, 1981; Amdt. 1–270, 60 FR 30196, June 8, 1995]

§ 1.4 General responsibilities.

(a) *Office of the Secretary.* Provides for:

(1) Leadership in formulating and executing well-balanced national and international transportation objectives, policies, and programs;

(2) Stimulating and promoting research and development in all modes and types of transportation, with special emphasis on transportation safety;

(3) Coordinating the various transportation programs of the Federal Government;

(4) Encouraging maximum private development of transportation services;

(5) Responsive, timely, and effective liaison with Congress, and public and private organizations on transportation matters;

(6) Innovative approaches to urban transportation and environmental enhancement programs; and

(7) Effective management of the Department as a whole.

(b) *U.S. Coast Guard.* Is responsible for:

(1) Upon the high seas and waters subject to the jurisdiction of the United States:

(i) Enforcing or assistance in enforcing applicable Federal laws;

(ii) Administering laws and promulgating and enforcing regulations for promoting safety of life and property, covering all matters not specifically delegated by law to some other executive department or reserved to the States;

(iii) Developing, establishing, maintaining, and operating, with due regard to the requirements of national defense, aids to navigation, icebreaking facilities, and rescue facilities for promoting safety; and

(2) Maintaining a state of readiness to function as a specialized service in the Navy, in time of war or when the President shall direct, as provided in section 3 of title 14, United States Code.

(c) *The Federal Aviation Administration.* Is responsible for:

(1) Promulgating and enforcing regulations on all safety matters relating to the manufacture, operation, and maintenance of aircraft;

(2) Registering aircraft and recording rights in aircraft;

(3) Developing, modifying, testing, and evaluating systems, procedures, facilities, and devices needed for the safe and efficient navigation and traffic control of aircraft;

(4) Locating, constructing or installing, maintaining, and operating Federal aids to air navigation, wherever necessary;

(5) Developing air traffic regulations, and administering air traffic control of civil and military air operations within U.S. airspace;

(6) Providing grants-in-aid for developing public airports;

(7) Promoting and encouraging civil aviation abroad through technical aviation assistance to other governments; and

(8) Promulgating and enforcing regulations on all safety matters relating to commercial launch activities.

(d) *The Federal Highway Administration*. Is responsible for:

(1) Planning, in cooperation with the States, the national highway system;

(2) Providing for improving, in cooperation with the States, roads on the Federal-aid primary, secondary, and interstate highway systems and urban extensions thereof;

(3) Highway beautification and scenic enhancement of the Federal-aid highway systems;

(4) Surveying and constructing forest highway system roads, defense highways and access roads, and parkways and roads in national parks and other federally administered areas;

(5) Inspecting records of motor carriers operating in interstate commerce, inspecting motor carrier vehicles, and investigating accidents and reporting violations of motor carrier safety regulations; and

(6) Developing and administering uniform State standards for highway safety programs with respect to identification and surveillance of accident locations; highway design, construction, and maintenance, including highway related aspects of pedestrian safety; and traffic control devices.

(e) *The Federal Railroad Administration*. Is responsible for:

(1) Operating and managing the Alaska Railroad;

(2) Conducting research and development activity in support of improved rail transportation;

(3) Regulating safety functions pertaining to railroads, express companies, and water carriers operating in connection with railroads under a common control, management, or arrangement for continuous carriage or shipment; and

(4) Investigating and issuing reports concerning collisions, derailments, and other railroad accidents resulting in serious injury to persons or to the property of a railroad.

(f) *The National Highway Traffic Safety Administration*. Is responsible for:

(1) Promulgating uniform standards for developing State highway safety programs, except for those standards the development and administration of which are delegated to the Federal Highway Administration.

(2) Establishing, prescribing, and enforcing National standards for improving safety in the operation and performance of motor vehicles and equipment.

(3) Informing the public of the comparative characteristics and operational cost of passenger motor vehicles and requiring display of comparative insurance costs by automobile dealers.

(4) Administering a program of mandatory automotive fuel economy standards for passenger and non-passenger automobiles for model year 1978 and beyond.

(5) Establishing safeguards for the protection of purchasers with respect to the sale of motor vehicles having altered or reset odometers and enforcing the prohibition against tampering with odometers.

(g) *The Urban Mass Transportation Administration*. Is responsible for:

(1) Exercising the authority vested in the Secretary for developing comprehensive and coordinated mass transportation systems to serve metropolitan and other urban areas;

(2) Administering urban mass transportation programs and functions; and

(3) Assuring appropriate liaison and coordination with other governmental organization, with respect to the foregoing.

(h) *The St. Lawrence Seaway Development Corporation*. Is responsible for the development, operation, and maintenance of that part of the St. Lawrence Seaway within the territorial limits of the United States.

(i) *The Research and Special Programs Administration*. Is responsible for:

(1) Planning, developing, initiating and managing programs in all fields of transportation research and development. Maintaining the capability to perform research and analysis in transportation planning and socioeconomic effects, program management, and technological support in response to request for line participation in DOT policy formulations. Particular efforts will be made on transportation systems problems, advanced transportation concepts, and on multimodal transportation. RSPA will develop and maintain a vital statistics and related transportation information data base;

(2) Exercising for the Secretary the multimodal hazardous materials (HM) program and prescribing and enforcing safety regulations for the transportation of gases or hazardous liquids by pipeline;

(3) Developing, managing, and evaluating programs and research activities for the security of passengers and cargo in the transportation systems and for the prevention of unlawful or other acts adversely affecting the efficiency or integrity of the Nation's transportation systems and providing leadership in the development and improvement of coordinated domestic and international transportation services;

(4) Providing leadership on all technical, navigation and communication, and systems engineering activities;

(5) Providing a point of contact for the Department with the academic community to encourage transportation research;

(6) Overseeing the effective discharge of the Secretary's statutory and administrative transportation responsibilities in all emergencies affecting the national defense and in national or regional crises; and

(7) Managing a Transportation Safety Institute which designs and conducts training programs responsible to the requirements of Government and industry as expressed by the operating elements of the Department.

(j) *The Maritime Administration.* Is responsible for:

(1) Fostering the development and maintenance of an American merchant marine sufficient to meet the needs of the national security and of the domestic and foreign commerce of the United States;

(2) Awarding and administering construction-differential subsidy contracts and operating-differential subsidy contracts to aid the American merchant marine, and trade-in allowances for new ship construction;

(3) Entering into and administering agreements for capital contruction funds (excepting fishing vessels) and construction reserve funds;

(4) Providing insurance on construction loans and ship mortgages or guarantees on ship financing obtained from private sources for ship construction and reconstruction (excepting fishing vessels);

(5) Providing assistance to the shipping industry to generate increased trade and cargo shipments on U.S. flag ships;

(6) Promoting development of ports and intermodal transportation systems;

(7) Promoting development of the domestic waterborne commerce of the United States;

(8) Overseeing the administration of cargo preference statutes;

(9) Entering into and administering charters and general agency agreements for operation of Government-owned merchant ships;

(10) Maintaining custody of, and preserving, ships in the National Defense Reserve Fleet;

(11) Selling surplus Government-owned ships;

(12) Supervising design and construction of ships for Government account;

(13) Furnishing war risk insurance on privately owned merchant ships;

(14) Administering the foreign transfer program regarding ships and other maritime properties;

(15) Training merchant marine officers;

(16) Conducting research and development to improve and promote the waterborne commerce of the United States; and

(17) Issuing rules and regulations with respect to the foregoing functions.

(k) *The Maritime Subsidy Board (within the Maritime Administration).* Is responsible for:

(1) Making, amending, and terminating subsidy contracts, which shall

be deemed to include, in the case of construction-differential subsidy: (i) The contract for the construction, reconstruction, or reconditioning of a vessel, and (ii) the contract for the sale of the vessel to the subsidy applicant or the contract to pay a construction-differential subsidy and the cost of the national defense features, and, in the case of operating-differential subsidy, the contract with the subsidy applicant for the payment of the subsidy.

(2) Conducting hearings and making determinations antecedent to making, amending, and terminating subsidy contracts, under the provisions of titles V, VI, and VII, and sections 301 (except investigations, hearings, and determinations, including changes in determinations, with respect to minimum manning scales, minimum wage scales, and minimum working conditions), 708, 805(a), and 805(f) of the Merchant Marine Act, 1936, as amended (the ''Act'').

(3) Approving the sale, assignment, or transfer of any operating subsidy contract under section 608 of the Act.

(4) Performing so much of the functions with respect to adopting rules and regulations, subpoenaing witnesses, administering oaths, taking evidence, and requiring the production of books, papers, and documents, under sections 204 and 214 of the Act, as they relate to the functions of the Board.

(5) Performing as much of the functions specified in section 12 of the Shipping Act, 1916, as amended, as the same relate to the functions of the Board under paragraphs (k) (1) through (4) of this section.

(l) *The Bureau of Transportation Statistics.* Is responsible for:

(1) Compiling, analyzing, and publishing a comprehensive set of transportation statistics to provide timely summaries and total (including industrywide aggregates and multiyear averages) of transportation-related information;

(2) Establishing and implementing, in cooperation with the modal administrators, the States, and other Federal officials, a comprehensive, long-term program for the collection and analysis of data relating to the performance of the national transportation system;

(3) Issuing guidelines for the collection of information by the Department required for statistics to be compiled pursuant to 49 U.S.C. 111(c)(1) in order to ensure that such information is accurate, reliable, relevant, and in a form that permits systematic analysis;

(4) Coordinating the collection of information by the Department required for statistics to be compiled pursuant to 49 U.S.C. 111(c)(1) with related information-gathering activities conducted by the other Federal departments and agencies collecting appropriate data not elsewhere gathered;

(5) Making the statistics published under this subsection readily accessible, in compliance with all disclosure laws, regulations, and requirements; and.

(6) Identifying information that is needed in accordance with 49 U.S.C. 111(c)(1) but which is not being collected, reviewing such needs at least annually with the Advisory Council on Transportation Statistics, and making recommendations to appropriate Department of Transportation research officials concerning extramural and intramural research programs to provide such information.

[Amdt. 1–113, 40 FR 43901, Sept. 24, 1975, as amended by Amdt. 1–120, 41 FR 42956, Sept. 29, 1976; Amdt. 1–125, 41 FR 53798, Dec. 9, 1976; Amdt. 1–157, 45 FR 83403, Dec. 18, 1980; Amdt. 1–164, 46 FR 47458, Sept. 28, 1981; Amdt. 1–211, 51 FR 29471, Aug. 18, 1986; Amdt. 1–270, 60 FR 30196, June 8, 1995; Amdt. 1–274, 60 FR 62762, Dec. 7, 1995]

Subpart B—Office of the Secretary

§ 1.21 Purpose.

This subpart establishes the basic organizational structure, spheres of primary responsibility, and lines of authority in the Office of the Secretary. It also describes the relationships between the Office of the Secretary and the operating administrations, and provides for succession to the position of Secretary in case of need.

§ 1.22 Structure.

(a) *Secretary and Deputy Secretary.* The Secretary and Deputy Secretary are assisted by the following, all of which report directly to the Secretary: The Associate Deputy Secretary and

Director, Office of Intermodalism; the Executive Secretariat; the Board of Contract Appeals; the Departmental Office of Civil Rights; the Office of Small and Disadvantaged Business Utilization; the Office of Intelligence and Security; the Office of Public Affairs; and the Office of the Chief Information Officer. The Assistant Secretaries, the General Counsel, and the Inspector General also report directly to the Secretary.

(b) *Office of the Assistant Secretary for Transportation Policy.* This Office is composed of the Offices of Environment, Energy and Safety; and Economics.

(c) *Office of the Assistant Secretary for Aviation and International Affairs.* This Office is composed of the Offices of Aviation International Economics; International Transportation and Trade; International Aviation; and Aviation Analysis.

(d) *Office of the General Counsel.* This Office is composed of the Offices of Environmental, Civil Rights, and General Law; International Law; Litigation; Legislation; Regulation and Enforcement; the Board for Correction of Military Records; and Aviation Enforcement and Proceedings.

(e) *Office of the Assistant Secretary for Budget and Programs.* This Office is composed of the Offices of Programs and Evaluation; and Budget.

(f) *Office of the Assistant Secretary for Governmental Affairs.* This office is composed of the Offices of Congressional Affairs and Intergovernmental Affairs.

(g) *Office of the Assistant Secretary for Administration.* This Office is composed of the Offices of Personnel; Management Planning; Information Resource Management; Administrative Services and Property Management; Hearings; Acquisition and Grant Management; Security; Financial Management; and Administrative Systems Development.

(h) *Office of the Inspector General.* The duties and responsibilities of the Office of Inspector General are carried out by the Assistant Inspector General for Auditing; the Assistant Inspector General for Investigations; the Assistant Inspector General for Policy, Planning, and Resources; and the Assistant Inspector General for Inspections and Evaluations.

[Amdt. 1–261, 59 FR 10061, Mar. 3, 1994, as amended by Amdt.1–268, 60 FR 14226, Mar. 16, 1995; Amdt. 1–269, 60 FR 15877, Mar. 28, 1995; Amdt. 1–274, 60 FR 62762, Dec. 7, 1995; Amdt. 1–290, 62 FR 51804, Oct. 3, 1997]

§ 1.23 Spheres of primary responsibility.

(a) *Secretary and Deputy Secretary.* Overall planning, direction, and control of departmental affairs including civil rights, contract appeals, small and disadvantaged business participation in departmental programs, transportation research and technology, commercial space transportation, intelligence and security, and public affairs.

(b) *Associate Deputy Secretary and Director, Office of Intermodalism.* Assists the Secretary and Deputy Secretary in carrying out a variety of executive and managerial policies, programs and initiatives. Focal point within the Federal Government for coordination of intermodal transportation policy which brings together departmental intermodal perspectives, advocates intermodal interests, and provides secretarial leadership and visibility on issues that involve or affect more than one operating administration.

(c) *General Counsel.* Legal services as the chief legal officer of the Department, legal advisor to the Secretary and the Office of the Secretary; final authority within the Department on questions of law; professional supervision, including coordination and review, over the legal work of the legal offices of the Department; drafting of legislation and review of legal aspects of legislative matters; point of coordination for the Office of the Secretary and Department Regulations Council; advice on questions of international law; exercise of functions, powers, and duties as Judge Advocate General under the Uniform Code of Military Justice (Chapter 47 of Title 10, U.S.C.) with respect to the United States Coast Guard; advice and assistance with respect to uniform time matters; ensures uniform departmental implementation of the Freedom of Information Act (5 U.S.C. 552); responds to requests for records of the Office of the Secretary

including the Office of the Inspector General, under that statute; review and final action on applications for reconsideration of initial decisions not to disclose unclassified records of the Office of the Secretary requested under 5 U.S.C. 552(a)(3); promotion and coordination of efficient use of Departmental legal resources; recommendation, in conjunction with the Assistant Secretary for Administration, of legal career development programs within the Department; review and final action on application for correction of military records of the United States Coast Guard.

(d) *Assistant Secretary for Transportation Policy*. Principal policy advisor to the Secretary and the Deputy Secretary. Public policy development, coordination, and evaluation for all aspects of transportation, with the goal of making the Nation's transportation resources function as an integrated national system; evaluation of private transportation sector operating and economic issues; evaluation of public transportation sector operating and economic issues; regulatory and legislative initiatives and review; energy, environmental, disability, and safety policy and program development and review; and transportation infrastructure assessment and review.

(e) *Assistant Secretary for Aviation and International Affairs.* Public policy assessment and review; private sector evaluation; international transportation and transport-related trade policy and issues; regulatory and legislative initiatives and review of maritime/shipbuilding policies and programs; transport-related trade promotion; coordination of land transport relations with Canada and Mexico; technical assistance and science and technology cooperation; international visitors' programs; economic regulation of the airline industry; and essential air service program.

(f) *Assistant Secretary for Budget and Programs.* Preparation, review and presentation of Department budget estimates; liaison with OMB and Congressional Budget and Appropriations Committees; departmental financial plans, apportionments, reapportionments, reprogrammings, and allotments; program and systems evaluation and analysis; program evaluation criteria; program resource plans; analysis and review of legislative proposals and one-time reports and studies required by the Congress; budgetary and selected administrative matters relating to the Immediate Office of the Secretary.

(g) *Assistant Secretary for Governmental Affairs.* Coordination of legislative and non-legislative relationships; congressional affairs; communications and coordination with Federal, State and local governments, industry and labor, and with citizens and organizations representing consumers.

(h) *Assistant Secretary for Administration*. Organization; delegations of authority; personnel ceiling control; management studies; personnel management; acquisition and grant management (except for the responsibility listed for the Office of Small and Disadvantaged Business Utilization in this section); information resource management; financial management; development and implementation of a Departmental Accounting and Financial Information System (DAFIS); property management information; security; computer support; telecommunications; and administrative support services for the Office of the Secretary and certain other components of the Department.

(i) *Inspector General.* Conduct, supervise, and coordinate audits and investigations, review existing and proposed legislation and make recommendations to the Secretary and Congress (Semiannual reports) concerning their impact on the economy and efficiency of program administration, or the prevention and detection of fraud and abuse; recommend policies for and conduct, supervise, or coordinate other activities of the Department for the purpose of promoting economy and efficiency in program administration, or preventing and detecting fraud and abuse.

(j) *Executive Secretary*. Central facilitative staff for the Immediate Office of the Secretary and the Secretarial Officers.

(k) *Board of Contract Appeals.* Conducts trials and issues final decisions, which are appealable to the United States Court of Appeals for the Federal Circuit, on appeals from contracting officer decisions under contracts

awarded by the Department and its constituent administrations in accordance with the Contract Disputes Act of 1978, 41 U.S.C. 601 et seq.; sits as the Contract Adjustment Board with plenary authority to grant extraordinary contractual relief in accordance with 50 U.S.C. 1431–1435 and Executive Order 10789 (3 CFR, 1954–1958 comp., p. 426), as amended; hears and decides all contractor and subcontractor debarment, suspension, or ineligibility cases pursuant to the Federal Acquisition Regulation, 48 CFR 9.402; judges serve as ''neutrals'' under the Administrative Dispute Resolution Act, 5 U.S.C. 581 et seq., in contract-related matters; and performs such other adjudicatory functions assigned by the Secretary as are consistent with the duties and responsibilities of the Board as set forth in 41 U.S.C. 601 et seq.

(l) *Departmental Office of Civil Rights.* The Director of the Departmental Office of Civil Rights serves as the Department's Equal Employment Opportunity (EEO) Officer and Title VI Coordinator. The Director also serves as principal advisor to the Secretary and the Deputy Secretary on the civil rights and nondiscrimination statutes, regulations, and executive orders applicable to the Department, including titles VI and VII of the Civil Rights Act of 1964, as amended, the Age Discrimination in Employment Act of 1967, as amended, the Age Discrimination Act of 1975, as amended, section 504 of the Rehabilitation Act of 1973, as amended, the Americans with Disabilities Act of 1990, and the Equal Pay Act of 1963. The Office of Civil Rights also provides policy guidance to the operating administrations and Secretarial officers on these matters. Also, the Office periodically reviews and evaluates the civil rights programs of the operating administrations to ensure that recipients of DOT funds meet applicable Federal civil rights requirements.

(m) *Office of Small and Disadvantaged Business Utilization.* Responsible for the Department's implementation and execution of the functions and duties under sections 8 and 15 of the Small Business Act, as amended, (15 U.S.C. 637 and 644), and for other departmental small and disadvantaged business policy direction.

(n) [Reserved]

(o) *Office of Intelligence and Security.* Focal point within the Department of Transportation for intelligence and security matters which affect the safety of the traveling public.

(p) *Office of Public Affairs.* Focal point for public information and departmental relations with the news media, the general public, and selected special publics.

(q) *Office of the Chief Information Officer.* Serves as principal advisor to the Secretary on matters involving information resources and information systems management.

[Amdt. 1–261, 59 FR 10062, Mar. 3, 1994, as amended by Amdt. 265, 60 FR 2891, Jan. 12, 1995; Amdt. 1–274, 60 FR 62762, Dec. 7, 1995; Amdt. 1–290, 62 FR 51804, Oct. 3, 1997]

§ 1.24 Authority.

(a) The Deputy Secretary may exercise the authority of the Secretary, except where specifically limited by law, order, regulation, or instructions of the Secretary.

(b) Acting in his or her own name and title, each Assistant Secretary, the Inspector General, or the General Counsel, within his or her sphere of responsibility, is authorized to identify and define the requirements for, and to recommend to the Secretary, new or revised Departmental policies, plans, and proposals. Each of these officers is authorized to issue Departmental standards, criteria, systems and procedures that are consistent with applicable laws, Executive Orders, Government-wide regulations and policies established by the Secretary, and to inspect, review, and evaluate Departmental program performance and effectiveness and advise the Secretary regarding the adequacy thereof.

(c) Except for nondelegable statutory duties, including those which devolve as a result of succession to act as Secretary of Transportation, each Deputy Assistant Secretary, the Deputy Inspector General, and the Deputy General Counsel is authorized to act for and perform the duties of his or her principal in the absence or disability of the principal and as otherwise directed by the principal.

(d) *Inspector General.* The Inspector General shall report to and be under

the general supervision of the Secretary and Deputy Secretary. In accordance with the statutory intent of the Inspector General Act to create an independent and objective unit, the Inspector General is authorized to make such investigations and reports relating to the administration of the programs and operations of the Department as are, in the judgment of the Inspector General, necessary and desirable. Neither the Secretary nor the Deputy Secretary shall prevent or prohibit the Inspector General from initiating, carrying out, or completing any audit or investigation, or from issuing any subpoena during the course of any audit or investigation.

[Amdt. 1–113, 40 FR 43901, Sept. 24, 1975, as amended by Amdt. 1–157, 45 FR 83404, Dec. 18, 1980]

§ 1.25 Relationships.

(a) *Normal staff role.* Normally, the functions of the Assistant Secretaries are staff and advisory in nature. In performing their functions, the Assistant Secretaries are responsible for continuing liaison and coordination among themselves and with the operating administrations to:

(1) Avoid unnecessary duplication of effort by or in conflict with the performance of similar activities by the operating administrations and the other Assistant Secretaries pursuant to their Secretarial delegations of authority; and

(2) Assure that the views of the operating administrations are considered in developing Departmental policies, plans, and proposals.

The Assistant Secretaries are also available to assist, as appropriate, the operating administrations in implementing Departmental policy and programs. As primary staff advisors to the Secretary, the Assistant Secretaries are concerned with transportation matters of the broadest scope, including modal, intermodal, and other matters of Secretarial interest.

(b) *Exceptions.* There are exceptions to the normal staff role described in paragraph (a) of this section. In selected instances, the Secretary has specifically delegated to Assistant Secretaries authority which they may exercise on the Secretary's behalf. For example, the Secretary has delegated authority to the Assistant Secretary for Transportation Policy and the Assistant Secretary for Aviation and International Affairs, as appropriate, to decide on most requests to intervene or appear before administrative agencies, subject to the concurrence of the General Counsel. Also, from time to time, activities of an operational character may be delegated to an Assistant Secretary when the nature of the function or its stage of development makes it untimely to effect assignment to an operating administration.

[Amdt. 1–113, 40 FR 43901, Sept. 24, 1975, as amended by Amdt. 1–157, 45 FR 83405, Dec. 18, 1980; Amdt. 1–261, 59 FR 10063, Mar. 3, 1994]

§ 1.26 Secretarial succession.

(a) The following officials, in the order indicated, shall act as Secretary of Transportation, in case of the absence or disability of the Secretary, until the absence or disability ceases, or, in case of a vacancy, until a successor is appointed:

(1) Deputy Secretary.

(2) General Counsel.

(3) Assistant Secretary for Transportation Policy.

(4) Assistant Secretary for Aviation and International Affairs.

(5) Assistant Secretary for Governmental Affairs.

(6) Assistant Secretary for Budget and Programs.

(7) Associate Deputy Secretary.

(8) Federal Aviation Administrator.

(9) Assistant Secretary for Administration.

(b) Without regard to the foregoing, a person directed to perform the duties of the Secretary pursuant to 5 U.S.C. 3347 shall act as Secretary of Transportation.

[Amdt. 1–157, 45 FR 83405, Dec. 18, 1980, as amended by Amdt. 1–184, 48 FR 44079, Sept. 27, 1983; Amdt. 1–261, 59 FR 10063, Mar. 3, 1994; Amdt. 1–291, 62 FR 55357, Oct. 24, 1997]

Subpart C—Delegations

§ 1.41 Purpose.

(a) Except as provided in paragraph (b) of this section, this subpart provides for the exercise of the powers and performance of the duties vested in the Secretary of Transportation by law.

(b) For delegations of authority vested in the Secretary by Executive Order 11652 originally to classify documents as secret or confidential, see §8.11 of this subtitle.

§ 1.42 Exercise of authority.

In exercising powers and performing duties delegated by this subpart or redelegated pursuant thereto, officials of the Department of Transportation are governed by applicable laws, Executive orders and regulations and by policies, objectives, plans, standards, procedures, and limitations as may be issued from time to time by or on behalf of the Secretary, or, with respect to matters under their jurisdictions, by or on behalf of the Deputy Secretary, an Assistant Secretary, the Inspector General, the General Counsel, or an Administrator. This includes, wherever specified, the requirement for advance notice to, prior coordination with, or prior approval by an authority other than that of the official proposing to act.

[Amdt. 1–114, 41 FR 1288, Jan. 7, 1976, as amended by Amdt. 1–157, 45 FR 83405, Dec. 18, 1980]

§ 1.43 General limitations and reservations.

(a) All powers and duties that are not delegated by the Secretary in this subpart, or otherwise vested in officials other than the Secretary, are reserved to the Secretary. Except as otherwise provided, the Secretary may exercise powers and duties delegated or assigned to officials other than the Secretary.

(b) Except as provided in §1.42 and subject to paragraph (a) of this section and §1.44, the Deputy Secretary, the Assistant Secretaries, the Inspector General, the General Counsel, and the Administrators exercise the powers and perform the duties delegated to them under this subpart.

(c) Notwithstanding the provisions of paragraph (a), the delegation of authority in §1.56b of this title to the Designated Senior Career Official in the Office of the Assistant Secretary for Aviation and International Affairs to make decisions in certain aviation hearing cases is exclusive, and may not be exercised by any other Departmental official, including the Secretary. The Secretary reserves (and delegates to the Assistant Secretary for Aviation and International Affairs) only the authority to make discretionary review of any such decision and to approve it or to remand it for reconsideration by the Designated Senior Career Official, with a full written explanation of the basis for the remand.

[Amdt. 1–157, 45 FR 83405, Dec. 18, 1980, as amended by Amdt. 1–199, 49 FR 50996, Dec. 31, 1984; Amdt. 1–261, 59 FR 10061, 10063, Mar. 3, 1994]

§ 1.44 Reservation of authority.

The delegations of authority in §§1.45 through 1.53 and §§1.66 and §1.67 do not extend to the following actions, authority for which is reserved to the Secretary or the Secretary's delegatee within the Office of the Secretary:

(a) *General transportation matters.* (1) Transportation leadership authority under section 4(a) of the Department of Transportation Act (49 U.S.C. 1653(a)).

(2) Functions relating to transportation activities, plans, and programs under section 4(g) of the Department of Transportation Act (49 U.S.C. 1653(g)).

(3) Authority to develop, prepare, coordinate, transmit, and revise transportation investment standards and criteria under section 7 of the Department of Transportation Act (49 U.S.C. 1656).

(4) Authority relating to standard time zones and advanced (daylight) time (15 U.S.C. 260 *et seq.*).

(5) Authority related to national transportation policy under section 3 of the Airport and Airway Development Act of 1970 (84 Stat. 219).

(b) *Legislation and reports.* (1) Submission to the President, the Director of the Office of Management and Budget, or the Congress of proposals or recommendations for legislation, Executive orders, proclamations or reorganization plans or other Presidential action.

(2) Submission to Congress or the President of any report or any proposed transportation policy or investment standards or criteria, except with the prior written approval of the Secretary.

(3) Submission of the annual statement on systems of internal accounting and administrative control under the Federal Managers' Financial Integrity Act of 1982 (Pub. L. 97–255).

(c) *Budget and finance.* (1) Approval and submission to the Office of Management and Budget of original or amended budget estimates or requests for allocations of personnel ceiling (31 U.S.C. 22–24).

(2) Approval of requests for legislation which, if enacted, would authorize subsequent appropriations for the Department (31 U.S.C. 581b).

(3) Transfer of the balance of an appropriation from one operating element to another within the Department (31 U.S.C. 581c).

(4) Submission to the Director of the Office of Management and Budget of requests for the transfer of the balance or portions of an appropriation from one element to another within the Department (31 U.S.C. 665).

(d) *Interventions and appearances.* Except with respect to proceedings relating to safety fitness of an applicant (49 U.S.C. 1653(e)), the making of decisions on requests to intervene or appear before courts and administrative agencies to present the views of the Department.

(e) *Personnel.* (1) Recommendations to the Civil Service Commission of the allocation of a position to GS–16, 17, or 18 or an equivalent level (5 U.S.C. 5108).

(2) Recommendations to the Civil Service Commission of approval of the qualifications of any candidate for a position at grade GS–16, 17, or 18 or an equivalent level (5 U.S.C. 3324), or to an executive level position.

(3) Recommendations to the Civil Service Commission of a Lump-Sum Incentive Award in Excess of $5,000 (5 U.S.C. 4502).

(4) Approval of the following actions relating to Schedules A, B, and C and noncareer executive assignment positions or incumbents, except for actions under Schedules A and B limited to one year or less at grade GS–9 or lower, or an equivalent level:

(i) Establishment or abolition of positions;

(ii) Hires;

(iii) Promotions other than quality and periodic within-grade promotions;

(iv) Transfer of personnel to Schedule A, B, or C positions or non-career executive assignment positions, either permanently or on detail; and

(v) Transfer of personnel from Schedule A, B, or C or non-career executive assignment positions to career Civil Service positions.

(5) Approval of employment of experts or consultants.

(6) Authority relating to scientific and professional positions under section 6(a) (5) of the Department of Transportation Act (49 U.S.C. 1655(a)(5)).

(7) Authority to determine the maximum limit of age for appointment of air traffic controllers as provided by 5 U.S.C. 3307(b) (86 Stat. 141).

(8) Authority to develop, coordinate, and issue wage schedules under the Federal Wage system, except as delegated to the Commandant of the Coast Guard at § 1.46.

(f) *Security.* (1) Suspension or removal of an employee from a position in the Department for security reasons under Executive Order 10450 (3 CFR, 1949–53 Comp., p. 936) or the employment in the Department of a person who was previously separated for security reasons from any Federal agency.

(2) Authorizing the filling of a critical-sensitive position for a limited period by a person on whom a preappointment full field investigation has not been completed (Executive Order 10450).

(3) Requesting Presidential approval of a claim of executive privilege with respect to information requested by a congressional committee or Member of Congress.

(4) Making determinations prescribed by sections 4(a)(2)(B), 4(b)(3), 5(b), and 9 of Executive Order 10865 (3 CFR, 1959–63 Comp., p. 398) relating to the adjudication and final denial of access to classified information to industry personnel.

(5) Making those determinations or delegations prescribed by sections 2(B)(3), 5(E) (1) and (2) of Executive Order 11652 (37 FR 5209, March 10, 1972) which are reserved to the head of the Department.

(g) *Procurement.* Exercise of the extraordinary authority for defense contracts provided for in Public Law 85–804 (50 U.S.C. 1431–1435), and considerations

and decisions on contract appeals and other matters pursuant to the Department of Transportation Contract Appeals Regulations (41 CFR part 12–60).

(h) *Printing.* Requesting approval of the Joint Committee on Printing for any procurement or other action requiring Committee approval.

(i) *Interagency agreements.* Execution of any written interdepartmental or interagency agreement with the head of another executive department or agency.

(j) *Withholding of funds.* Withholding or suspension of Federal-Aid Highway funds on a state-wide basis and the waiver or compromise of such withholding or suspension, except for the administration of 23 U.S.C. 141 and 154, which are specifically delegated in §1.48(b) (23) and (28) and in §1.50(i) (1) and (2).

(k) *Alaska Railroad.* Extension or abandonment of railroad service.

(l) *National Highway Safety Advisory Committee.* Directing the National Highway Safety Advisory Committee to meet (23 U.S.C. 404(c)).

(m) *Coast Guard.* The following powers relating to the Coast Guard:

(1) Appointment of Advisory Committee to the Academy (14 U.S.C. 193).

(2) Fixing date for visit to Academy by Board of Visitors (14 U.S.C. 194(b)).

(3)–(4) [Reserved]

(5) Responsibility for supervising activities of Reserve components (10 U.S.C. 264(b)).

(6) Convening General Courts-Martial under the personal authority granted by law (10 U.S.C. 822(a)(2)).

(7) Approval of execution of a sentence dismissing a commissioned officer or cadet (10 U.S.C. 871(b)).

(8) Approval of vacation of a suspension of dismissal (10 U.S.C. 872(b)).

(9) Establishing procedures for the correction of military records (10 U.S.C. 1552(a)).

(10) Establishing a Discharge Review Board under 10 U.S.C. 1553 and reviewing and taking final action on its findings in the following cases:

(i) Those cases in which a minority of the Board requests that their written opinion be forwarded to the Secretary for consideration;

(ii) Those cases selected by the Commandant to inform the Secretary of aspects of the Board's functions which may be of interest to the Secretary;

(iii) Any case in which the Secretary demonstrates an interest; and

(iv) Any case which the president of the Board believes is of significant interest to the Secretary.

(11) [Reserved]

(12) Substitute administrative discharge for dismissal of an officer under 10 U.S.C. 804 (a) and (b).

(13) Designation of commanding officers and officers in charge who may convene general, special and summary courts-martial. (10 U.S.C. 822(a)(6), 823(a)(7), and 824(a)(4).

(14) In time of war certify cases to President to extend statute of limitations until after termination of hostilities. (10 U.S.C. 843(e)).

(15) Direct Judge Advocate General to establish branch office. (10 U.S.C. 868).

(16) Designate officers authorized to remit or suspend any part of amount of unexecuted part of any sentence. (10 U.S.C. 874(a)).

(17) Substitute administrative form of discharge for discharge or dismissal executed in accordance with sentence of court-martial (10 U.S.C. 874(b)).

(18) Substitute administrative discharge for previously executed sentence of dismissal when dismissal not imposed at new trial. (10 U.S.C. 875(c)).

(19) Designate persons to convene courts of inquiry. (10 U.S.C. 935(a)).

(n) *Automatic data processing.* Approval authority relating to automatic data processing equipment and services as delimited by DOT 1370.2A, Procurement of Automatic Data Processing Equipment and Services, of 7.22.70.

(o) *Deepwater ports.* The authority to issue, transfer, or amend a license for the construction and operation of a deepwater port (33 U.S.C. 1503(b)).

(p) [Reserved]

(q) *Review and finality of actions by Maritime Subsidy Board.* (1) Review of any decision, report, and/or order of the Maritime Subsidy Board, as described in 46 CFR part 202, as amended.

(r) *Approval of cash purchases of passenger transportation.* The authority under FPMR G–72, as amended, to authorize and approve cash purchases for

emergency passenger transportation services costing more than $100.

[Amdt. 1–113, 40 FR 43901, Sept. 24, 1975]

EDITORIAL NOTE: For FEDERAL REGISTER citations affecting § 1.44, see the List of CFR Sections Affected in the Finding Aids section of this volume.

§ 1.45 Delegations to all Administrators.

(a) Except as prescribed by the Secretary of Transportation, each Administrator is authorized to:

(1) Exercise the authority of the Secretary over and with respect to any personnel within their respective organizations.

(2) Exercise the authority of the Secretary as executive head of a department, under any statute, Executive order or regulation.

(3) Request the Attorney General to approve the award, compromise, or settlement of any tort claim for an amount exceeding $100,000 (excluding interest) (28 U.S.C. 2672).

(4) Carry out the functions vested in the Secretary concerning environmental enhancement by 49 U.S.C. 303.

(5) Carry out the emergency preparedness functions assigned to the Secretary by Executive Order 12656 and by the Federal Emergency Management Agency, General Services Administration (FEMA/GSA) as they pertain to his administration, including those relating to continuity of operations, emergency resource management, associated Federal claimant procedures, facilities protection and warfare effects monitoring and reporting, research, stockpiling, financial aid, and training.

(6) Enter into inter- and intradepartmental reimbursable agreements other than with the head of another department or agency (31 U.S.C. 686). This authority may be redelegated only to Office Directors, Regional Directors, District Commanders or other comparable levels and Contracting Officers.

(7) Determine the existence and amount of indebtedness and the method of collecting repayments from employees and members within their respective administrations and collect repayments accordingly, as provided by 5 U.S.C. 5514. Redelegation of this authority may be made only to the principal officials responsible for financial management or such officials' principal assistants.

(8) Waive claims and make refunds in connection with claims of the United States for erroneous payment of pay and allowances or of travel, transportation, and relocation expenses and allowances in amounts aggregating not more than $1,500 without regard to any repayments, and deny requests for waiver of such claims regardless of the aggregate amount of the claim, as provided by 4 CFR parts 91, 92, and 93. Redelegation of this authority may be made only to the level of Regional Director or District Commander.

(9) Settle and pay claims by employees for personal property losses as provided by 31 U.S.C. 3721. This authority may be redelegated only to Office Directors, Regional Directors, District Commanders, or other comparable levels and to those individuals that report to the above officials.

(10) Exercise the authority of the Secretary to resolve informal allegations of discrimination arising in or relating to their respective organizations through Equal Employment Opportunity counseling or the Alternative Dispute Resolution process and to develop and implement affirmative action and diversity plans within their respective organizations. With regard to external civil rights programs, each Administrator exercises authority pursuant to statutes, regulations, executive orders, or delegations in subpart C of this part to carry out these programs, under the general policy guidance of the Director of the Departmental Office of Civil Rights, including conducting compliance reviews and other activities relating to the enforcement of these statutes, regulations, and executive orders.

(11) Review and approve for payment any voucher for $25 or less the authority for payment of which is questioned by a certifying or disbursing officer.

(12) Authorize and approve official non-foreign travel and transportation for themselves, their subordinates, and others performing services for, or in cooperation with, their operating administrations. Additionally, heads of operating administrations, through a redelegation from the Deputy Secretary,

may authorize and approve routine operational foreign travel, as defined in DOT 1500.6A, Travel Manual, of 1–2–85. These authorities may be redelegated in accordance with regulations issued by the Assistant Secretary for Administration.

(13) Exercise the authority of the Secretary to make certifications, findings and determinations under the Regulatory Flexibility Act (Pub. L. 96–354) with regard to any rulemaking document for which issuance authority is delegated by other sections in this part. This authority may be redelegated to those officials to whom document issuance authority has been delegated.

(14) Carry out the functions vested in the Secretary by section 2 of the Federal Technology Transfer Act of 1986, (Pub. L. No. 99–502; 15 U.S.C. 3710a), which authorizes agencies to permit their laboratories to enter into cooperative research and development agreements.

(15) Compromise, suspend collection action on, or terminate claims of the United States not exceeding $100,000 (excluding interest) that are referred to, or arise out of the activities of, his or her Operating Administration;

(16) Compromise, suspend collection action on, or terminate claims against the United States not exceeding $100,000 (excluding interest) that are referred to, or arise out of the activities of, his or her Operating Administration; *provided that* when the Administrator believes that a claim against the United States presents a novel question of law or of policy, he or she shall obtain the advice of the Assistant Attorney General in charge of the Civil Division; and *provided further that* whenever he or she settles any administrative claim against the United States for an amount in excess of $50,000, the Administrator shall prepare a memorandum fully explaining the basis for the action taken and send a copy of the memorandum to the Director, Federal Torts Claims Act Staff, Torts Branch of the Civil Division, U.S. Department of Justice.

(17) Enter into memoranda of understanding with the Occupational Safety and Health Administration (OSHA) in regard to setting and enforcing occupational safety or health standards for employees in DOT-regulated industries. The General Counsel shall concur in each memorandum of understanding with OSHA prior to its execution by the Administrator of the operating administration concerned.

(18) Exercise the authority vested in the Secretary by Section 329A of the Department of Transportation and Related Agencies Appropriations Act, 1995, Pub. L. No. 103–331, § 329A, 108 Stat. 2471, 2493 (September 30, 1994), to enter into grants, cooperative agreements, and other transactions with any person, agency, or instrumentality of the United States, any unit of state or local government, any educational institution, and any other entity in execution of the Technology Reinvestment Project authorized under the Defense Conversion, Reinvestment, and Transition Assistance Act of 1992, Pub. L. No. 102–484, 106 Stat. 2658 (October 23, 1992), and related legislation.

(b) Except as otherwise specifically provided, each official to whom authority is granted by §§ 1.45 through 1.53, 1.66, and 1.68 may redelegate and authorize successive redelegations of that authority within the organization under that official's jurisdiction.

(c) Except as provided in §§ 1.48 and 1.59 and 49 CFR 25.302, the functions, powers, and duties of the Secretary of Transportation, with respect to the Uniform Relocation Assistance and Real Property Acquisition Act of 1970, Public Law 91–646, 84 Stat. 1984, are delegated to:

(1) The head of each of the following Operating Administrations with respect to programs administered by their respective organizations:

(i) U.S. Coast Guard;

(ii) Federal Aviation Administration;

(iii) Federal Highway Administration;

(iv) Federal Railroad Administration;

(v) Urban Mass Transportation Administration;

(vi) National Highway Traffic Safety Administration;

(vii) St. Lawrence Seaway Development Corporation; and

(viii) Maritime Administration.

(2) [Reserved]

(d) Each office to whom authority is delegated by either § 1.45(c) or § 1.59(p)

may redelegate and authorize successive redelegations of that authority within the organization under the Administrators' or Assistant Secretary for Administration's jurisdiction.

(e) Each office to whom authority is delegated by either §1.45(c) or §1.59(p) may prescribe additional procedures, requirements and regulations that are appropriate to the particular programs administered by the preparing official's organization, provided:

(1) Any such additional guidance is not inconsistent with the Act, 49 CFR part 25 or subpart C of this manual;

(2) Any such additional guidance is approved prior to issuance by the Federal government's designated lead agency, the Federal Highway Administration (see §1.48(cc)), in coordination with the Assistant Secretary for Transportation Policy.

[Amdt. 1–113, 40 FR 43901, Sept. 24, 1975]

EDITORIAL NOTE: For FEDERAL REGISTER citations affecting §1.45, see the List of CFR Sections Affected in the Finding Aids section of this volume.

§1.46 Delegations to Commandant of the Coast Guard.

The Commandant of the Coast Guard is delegated authority to:

(a) [Reserved]

(b) Carry out all the activities of the Coast Guard, including, but not limited to, law enforcement, safety of life and property at sea (excluding 46 U.S.C. 170 (7), (10) and (11)), aids to navigation, search and rescue, icebreaking, oceanographic research and military readiness functions (49 U.S.C. 1655(b)(1)).

(c) Carry out the following laws relating generally to water vessel anchorages, drawbridge operating, regulations, obstructive bridges, pollution of the sea by oil and the locations and clearances of bridges and causeways over the navigable waters of the United States:

(1) Section 7 of the Act of March 4, 1915, as amended (38 Stat. 1053; 33 U.S.C. 471);

(2) Section 5 of the Act of August 18, 1894, as amended (28 Stat. 362; 33 U.S.C. 499);

(3) The Act of June 21, 1940, as amended (54 Stat. 497; 33 U.S.C. 511 *et seq.*);

(4) The Oil Pollution Act, 1961, as amended (75 Stat. 402; 33 U.S.C. 1001 *et seq.*);

(5) Sections 9 and 18 of the Act of March 3, 1899, as amended (30 Stat. 1151; 33 U.S.C. 401, 502);

(6) The Act of March 23, 1906, as amended (34 Stat. 84, 33 U.S.C. 491 *et seq.*) except section 3 (33 U.S.C. 493) and that portion of section 4 (33 U.S.C. 494) that relates to tolls.

(7) The General Bridge Act of 1946, as amended (60 Stat. 847, 33 U.S.C. 525 *et seq.*) except sections 502(c) and 503.

(d) Carry out the functions vested in the Secretary by the Vessel Documentation Act (94 Stat. 3453, 46 U.S.C. 65a *et seq.*) and the Tonnage Measurement Simplification Act (94 Stat. 3461, 46 U.S.C. 71 *et seq.*), and the functions assigned to the Secretary by Executive Order 12419 relating to admeasurement of ships; and carry out Reorganization Plan No. 1 of 1967, relating to ship mortgages.

(e) Request the Secretary of the Navy to build at naval shipyards Coast Guard vessels not normally or economically obtainable from private contractors (14 U.S.C. 145(a)(1)).

(f) Administer Executive Order 11459 (34 FR 5057), relating to approval of containers for transport under Customs seal.

(g) Exchange information, through the Secretary of State, with foreign governments on matters dealing with the safety of life and property at sea, other than radio communications, but not including the submission of suggestions to the Secretary of State on international collaboration and conferences (14 U.S.C. 142).

(h) Exchange personnel, vessels, facilities, and equipment with the Secretary of the Navy to facilitate operational readiness for wartime service with the Navy, and agree to undertake such assignments and functions for the mutual benefit of the Navy and Coast Guard as are necessary and advisable, except with respect to those exchanges and agreements which, in the Commandant's judgment, may have substantial political impact or adversely affect mission performance (14 U.S.C. 145(c)).

(i) Approve retention of a rear admiral on active duty for a period not exceeding one year (14 U.S.C. 290(b)).

(j) Through the Chief Counsel, U.S. Coast Guard, settle and pay claims against the United States as provided by 10 U.S.C. 2733.

(k) Award life-saving medals and military decorations (except the Medal of Honor, the Distinguished Service Medal, and the Legion of Merit) and carry out the laws and Executive orders relating to those awards (14 U.S.C. 492a, 493, 494, 496, 497, 498, 500, 501, 502; Executive Order 4601, Mar. 1, 1926, as amended by Executive Order 7786 (3 FR 39); Executive Order 9158 (7 FR 3541), as amended by Executive Order 9242A (7 FR 7874); Executive Order 10637 (20 FR 7025); Executive Order 11016 (27 FR 4139); Executive Order 11046 (27 FR 8575); Executive Order 11448 (34 FR 915)).

(l) Carry out the functions vested in the Secretary by sections 104(i), 104(j), 311(b), 311(j) (2) and (3), 311(m)(2), 312, and 402(b)(6) of the Federal Water Pollution Control Act (33 U.S.C. 1321), as amended by the Oil Pollution Act of 1990 (August 18, 1990; Pub L. 101–380; 104 Stat. 484), and sections 4202(b) (2) and (3) of the Oil Pollution Act of 1990.

(m) Carry out the functions assigned to the Secretary by Executive Order 12777 (3 CFR, 1991 Comp.; 56 FR 54757) in sections 1(b), 2(a), 2(b)(2), 2(c), 2(d)(2), 2(e)(2), 2(f), 2(g)(2), 3, 5(a)(2), 5(b)(1) and (3), 6, 7(a) (1) and (3), 7(b), 7(c), 7(d), 8(d), 8(f), 8(g), 8(h), 9, and 10(c), excepting that portion of section 2(b)(2) relating to the establishment of procedures, methods, and equipment and other requirements for equipment to prevent and to contain discharges of oil and hazardous substances from pipelines, motor carriers, and railroads; and further excepting the exercise of the authority in section 2(d)(2) over motor carriers and railroads, other than for operations incident to the transfer of oil or hazardous substances to or from vessels, and the exercise of the authority in section 2(d)(2) over pipelines.

(n) Carry out the functions vested in the Secretary by the following statutes:

(1) Federal Boat Safety Act of 1971 (85 Stat. 213);

(2) Vessel Bridge-to-Bridge Radio-Telephone Act (85 Stat. 164);

(3) Public Law 92–339, relating to the licensing of personnel on certain towing vessels (86 Stat. 423);

(4) Port and Tanker Safety Act of 1978 (92 Stat. 1471), except sections 4, 5, 6, 7, 8, 12 and 13 of Sec. 2 to the extent that those sections pertain to the operation of the St. Lawrence Seaway;

(5) Sections 104 (a) and (g), 107(c), 108, 201, and 302(a) of the Marine Protection, Research, and Sanctuaries Act of 1972 (Pub. L. 92–532) relating to ocean dumping;

(6) International Voyage Load Line Act of 1973 (Pub. L. 93–115);

(7) Intervention on the High Seas Act (Pub. L. 93–248) except section 13(a);

(8) Public Law 93–524 (88 Stat. 1694) which relates to waste materials on vessels (46 U.S.C. 77(e));

(9) Public Law 94–85 (89 Stat. 426), which relates to carriage of additional passengers on documented vessels in emergency situations;

(10)(i) Section 304(a)(1) of the Independent Safety Board Act of 1974 (49 U.S.C. 1903(a)(1)) insofar as it relates to the promulgation of joint regulations with the National Transportation Safety Board (NTSB) governing investigations of major marine casualties and casualties involving public and non-public vessels, and the conduct of accident investigations upon request of the Board;

(ii) Section 307 of the Independent Safety Board Act of 1974 (49 U.S.C. 1906) insofar as it relates to responses to NTSB recommendations regarding marine casualties;

(11) International Navigational Rules Act of 1977 (Pub. L. 95–75, 91 Stat. 308);

(12) International Safe Container Act (Pub. L. 95–208, 91 Stat. 1475), except section 4(e);

(13) 14 U.S.C. 195, relating to instruction of foreign nationals at the Coast Guard academy; and

(14) Inland Navigational Rules Act of 1980 (Pub. L. 96–591).

(o) Carry out the functions vested in the Secretary by 14 U.S.C. 475 and Executive Order 11645, 3 CFR 371 (1973), 37 FR 2923, February 10, 1972, relating to the rental of housing facilities at or near Coast Guard installations.

(p) Carry out the functions vested in the Secretary by Public Law 92–425 and Executive Order 11687 (37 FR 21479), relating to the Retired Serviceman's Survivor Benefit Plan.

(q) Carry out the functions vested in the Secretary by section 5 of the International Bridge Act of 1972 (Pub. L. 92–434) as it relates to navigable waterways other than the St. Lawrence River.

(r) Carry out the functions vested in the Secretary by 14 U.S.C. 657, relating to schooling and transportation to schools for dependents of Coast Guard personnel.

(s) Carry out the following powers and duties vested in the Secretary by the Deepwater Port Act of 1974, as amended (33 U.S.C. 1501–1524):

(1) The authority to process applications for the issuance, transfer or amendment of a license for the construction and operation of a deepwater port (33 U.S.C. 1503(b)) *in coordination* with the Administrator of the Maritime Administration.

(2) Carry out other functions and responsibilities vested in the Secretary by the Deepwater Port Act of 1974, as amended (33 U.S.C. 1501–1524), except as reserved by § 1.44(o) and delegated by §§ 1.53(a)(3) and 1.66(aa).

(t) Carry out the functions vested in the Secretary by 49 App. U.S.C. 1801–1819, and 46 App. U.S.C. 3306(a)(5) to the extent they relate to regulations and exemptions governing the bulk transportation of hazardous materials that are loaded or carried on board a vessel without benefit of containers or labels, and received and handled by the vessel carrier without mark or count, and regulations and exemptions governing ships' stores and supplies.

(u) Carry out the functions vested in the Secretary by 49 U.S.C. 1808(a), (b), and (c) and 1809 and 1810, relating to investigations, records, inspections, penalties, and specific relief, so far as they apply to the transportation or shipment of hazardous materials by water.

(v) Carry out the functions vested in the Secretary by the Magnuson Fishery Conservation and Management Act (Pub. L. 94–265, as amended; 16 U.S.C. 1801 *et seq.*) except that the authority to approve seizure of a foreign vessel may not be redelegated and shall be exercised in each instance only after consultation with the Department of State.

(w) Issue wage schedules for trades, crafts, and laboring employees in nonappropriated fund activities.

(x) Carry out the functions vested in the Secretary by 10 U.S.C. 2683 insofar as it relates to the relinquishment to a state of legislative jurisdiction of the United States over lands and interests under the control of the Coast Guard in that state.

(y) Carry out the functions and responsibilities vested in the Secretary by the Natural Gas Pipeline Safety Act of 1968, as amended (49 U.S.C. 1671 *et seq.*) relating to rulemaking so far as it applies to liquefied natural gas facilities adjacent to the navigable waters of the United States: *Provided,* That such rulemaking is in accordance with the Memorandum of Understanding between the Coast Guard and Materials Transportation Bureau executed on February 7, 1978, for regulation of such facilities.

(z) Carry out the functions vested in the Secretary by the Outer Continental Shelf Lands Act (43 U.S.C. 1331 *et seq.*), as amended, title VI of the Outer Continental Shelf Lands Act Amendments of 1978 (September 18, 1978; Pub. L. 95–372; 92 Stat. 629), except as delegated by § 1.53(a)(6).

(aa) Carry out the functions vested in the Secretary by the Federal Land Policy and Management Act of 1976 (43 U.S.C. 1714(i)) for lands under the administration of the U.S. Coast Guard.

(bb) Carry out the functions vested in the Secretary by the Act of September 10, 1976 (90 Stat. 1236, 46 U.S.C. 420) relating to the issuance of permits exempting specific cargo-carrying vessels operating within the State of Alaska from all or part of 46 U.S.C. 88, 391, 391a, and 404 and the regulations issued thereunder.

(cc) Carry out the requirements of section 146 of the Surface Transportation Assistance Act of 1978 (Pub. L. 95–599, 92 Stat. 2689) relating to foreign–built hovercraft in Alaska.

(dd) Exercise all functions of the General Services Administrator pertaining to the acquisition of special purpose space in urban centers, as defined in 41 CFR 101–18.102, to house U.S.

Coast Guard Recruiting Offices pursuant to the Federal Property and Administrative Services Act of 1949 (63 Stat. 377), as amended, and to acquire such space by firm term leases up to five (5) years in accordance with the authority contained in section 210(h)(1) of the Federal Property and Administrative Services Act of 1949, as amended. Provided, that such authority is exercised in accordance with the Memorandum of Understanding between the Department of Transportation and the General Services Administration executed on January 27, 1981, for implementation of this delegation.

(ee) Carry out all functions vested in the Secretary in any capacity by the Ocean Thermal Energy Conversion Act of 1980 (Pub. L. 96–320, August 3, 1980), except title II.

(ff) Carry out the functions vested in the Secretary by:

(1) Section 108(a)(3) of the Comprehensive Environmental Response, Compensation, and Liability Act, as amended (42 U.S.C. 9608(a)(3)), and by sections 7(b)(1), 7(b)(2), and 7(c) (2) of Executive Order 12580 relating to vessel financial responsibility; and

(2) Sections 2(e)(1), 2(e)(2), 2(i), 2(j)(1), 2(j)(2), 2(k), 3(a), 4(b)(1), 4(b)(2), 6(c), 9(d), 9(i), and 11(b)(2) of Executive Order 12580 relating to facilities and vessels under the jurisdiction, custody, or control of the Coast Guard.

(gg) Carry out the functions, relating to releases or threatened releases involving the coastal zone, Great Lakes waters, and ports and harbors, vested in the Secretary by sections 2(f), 2(i), 2(j)(2), 2(k), 4(c)(1), 4(c)(2), 5(b), 6(c), 9(d), 9(i), and 11(b)(2) of Executive Order 12580 insofar as they relate to:

(1) Responses to releases or threats of releases from vessels;

(2) Emergency action concerning releases or threats of releases at facilities other than active or inactive ''hazardous waste management facilities'' (as defined in 40 CFR 270.2); and

(3) Emergency action concerning releases or threats of releases at active or inactive ''hazardous waste management facilities'' only when the Coast Guard On-Scene Coordinator determines that such action must be taken pending the arrival on scene of an Environmental Protection Agency (EPA) On-Scene Coordinator (OSC). Unless otherwise agreed upon by the EPA and Coast Guard, this authority will not be exercised unless the EPA OSC is scheduled to arrive on scene within 48 hours of notification of the release or threat of release.

As used in this paragraph ''emergency action'' includes any removal action which, in the view of the Coast Guard On-Scene Coordinator, must be taken immediately to prevent or mitigate immediate and significant danger to the public health, welfare, or the environment. Situations in which such actions may be taken include, but are not limited to, fire, explosions, and other sudden releases; human, animal, or food chain exposure to acutely toxic substance; and the contamination of a drinking water supply. All functions listed in this paragraph include the authority to contract for, obligate monies for, and otherwise arrange for and coordinate the responses included within such functions.

(hh) Carry out the functions vested in the Secretary by the Act to Prevent Pollution from Ships (October 21, 1980; Pub. L. 96–478; 94 Stat. 2297) except section 10(b) and (c) and except as limited by § 1.47(n), § 1.52(c), and § 1.66(u) of this title.

(ii) Carry out the functions vested in the Secretary by the Deep Seabed Hard Mineral Resources Act (June 21, 1980; Pub. L. 96–283; 94 Stat. 553), except section 118.

(jj) Carry out the functions vested in the Secretary to convene and approve a Coast Guard Reserve Policy Board as provided in 14 U.S.C. 703.

(kk) Carry out the functions vested in the Secretary by the Fisheries Amendments of 1982 (Pub. L. 97–389; 96 Stat. 1949) relating to implementation of the Convention for the Conservation of Salmon in the North Atlantic Ocean and to documentation and certification of inspection of certain vessels.

(ll) Carry out the functions vested in the Secretary by sections 1004(d)(2)(C), 1015(b), 1016, 4107(b), 4109, 4110, 4111, 4114(a), 4115(b), 4115(e), 4116(c), 4118, 4203, 5002(c)(4), 5002(i), 5002(k), 5003, 5004, 5005(a)(5), 7001(a), 7001(b)(2) and 7001(c)(6) and (11) of the Oil Pollution Act of

1990 (August 18, 1990; Pub. L. 101–380; 104 Stat. 484). (See 49 CFR 1.53 and 1.66).

(mm)—(oo) [Reserved]

(pp) Except as specifically reserved in 49 CFR 1.44, carry out the responsibilities of, and exercise the authority of the Secretary contained in the Uniform Code of Military Justice, chapter 47 of title 10 United States Code, and the Manual for Courts-Martial, United States.

(qq) Carry out the functions and exercise the authority vested in the Secretary by 14 U.S.C. 659 relating to providing assistance to film producers and obtaining reimbursement for assistance provided.

(rr) Exercise the authority of the Secretary contained in 10 U.S.C. 1588 to accept voluntary services for a museum or a family support program operated by the Coast Guard; to determine which expenses are eligible for reimbursement; and to provide reimbursement from nonappropriated funds of incidental expenses incurred by persons providing voluntary services as an ombudsman or for a family service center program.

(ss) Carry out the functions and exercise the authority vested in the Secretary by chapter 125, title 46 U.S.C., to establish and maintain a vessel identification system and to charge fees to persons providing information to or requesting information from the system.

(tt) Carry out the functions and exercise the authority vested in the Secretary by chapter 19, title 14 U.S.C., to establish and carry out a program of environmental compliance and restoration at current and former Coast Guard facilities and to expend funds from the Environmental Compliance and Restoration Account.

(uu) Carry out the functions and exercise the authority vested in the Secretary by 46 U.S.C. 2110 to establish, collect, and enforce the fees and charges required by that section.

(vv) Carry out the functions and exercise the authority vested in the Secretary by 46 U.S.C. 8103(b)(3) to waive the citizenship requirements on vessels documented under U.S. law.

(ww) Carry out the functions and exercise the authority vested in the Secretary by 16 U.S.C. 4711, which pertain to establishing and enforcing regulations to prevent the introduction and spread of aquatic nuisance species into the Great Lakes and other waters of the United States through the ballast water of vessels. This authority may be redelegated.

(xx) Carry out the functions and exercise the authority vested in the Secretary by 33 U.S.C. 1226 to prevent or respond to acts of terrorism and 46 U.S.C. app. 1803, subsections (a) and (b), to assess the state of security standards at foreign ports. This authority may be redelegated.

(yy) Carry out the functions and exercise the authority vested in the Secretary by 42 U.S.C. 7511b(f), concerning tank vessel emissions, to promulgate safety regulations, to consult with the Administrator of the Environmental Protection Agency concerning emission standards, and to enforce compliance of emission standards as determined by such consultation. This authority may be redelegated.

(zz) Carry out the functions and exercise the authority vested in the Secretary by 46 U.S. Code Chapter 47 (abandonment of barges) and § 12301(b) (numbering of undocumented barges), as enacted by the Oceans Act of 1992, Title V, section 5301 *et seq.*, Pub. L. No. 102–587, 106 Stat. 5081. This authority may be redelegated.

(aaa) Establish the promotion zone for rear admiral (lower half), provided all captains eligible for consideration under the provisions of section 257(a)(5), Title 14, U.S. Code, are placed in the zone.

(bbb) Remove an officer from active duty under section 326, Title 14, U.S. Code.

(ccc) Carry out the functions and exercise the authority vested in the Secretary by 46 U.S. Code Chapter 45 (uninspected commercial fishing industry vessels), as enacted by the Commercial Fishing Industry Vessel Safety Act of 1988, as amended, Title 46, 4501 *et seq.*, Pub. L. No. 100–424, 102 Stat. 1585. This authority may be redelegated.

(ddd) Carry out the functions and exercise the authority vested in the Secretary by 46 U.S. Code Chapter 33 pertaining to the delegation of authority to classification societies to review and approve commercial vessel plans and conduct commercial vessel inspections

and examinations, as enacted by the Coast Guard Authorization Act of 1996, title 46, section 3316 (classification societies), Pub. L. 104–324, 110 Stat. 3901.

(eee) Carry out the functions vested in the Secretary by 46 U.S.C. 14104 to prescribe alternate tonnages for vessels.

(fff) Carry out the functions and responsibilities and exercise the authorities vested in the Secretary by 46 U.S.C. 3203–3205 (safety management system, implementation of safety management system, and certification), that pertain to the approval, certification, and enforcement of safety management systems for vessels engaged in foreign trade.

(ggg) Carry out the functions and exercise the authorities vested in the Secretary by 46 U.S.C. 3103 to rely on reports, documents, and records of other persons determined by the Secretary to be reliable, and other methods determined by the Secretary to be reliable, as evidence of compliance with title 46, subtitle II (46 U.S.C. 3103).

(hhh) Carry out the functions and exercise the authority vested in the Secretary by 16 U.S.C. 2405 to issue such regulations as are necessary and appropriate to implement the Antarctic Science, Tourism, and Conservation Act of 1996, Pub. L. No. 104–227, 110 Stat. 3034.

(iii) Carry out the functions and responsibilities and exercise the authorities vested in the Secretary by the Coast Guard Authorization Act of 1996, Pub. L. 104–324.

(jjj) Carry out the functions and responsibilities and exercise the authorities vested in the Secretary by the National Defense Authorization Bill of Fiscal Year 1995, Pub. L. 103–337, pertaining to benefits for Coast Guard members that are being separated or have recently been separated (10 U.S.C. Chapter 58).

(kkk) Carry out the functions and responsibilities and exercise the authorities vested in the Secretary by 14 U.S.C. 670 pertaining to procurement authority for Coast Guard family housing and by 14 U.S.C. 672 pertaining to long-term lease authority for navigation and communications systems sites.

(lll) Carry out the functions and responsibilities and exercise the authorities vested in the Secretary by 33 U.S.C. 1908(b), that pertain to payments of civil penalties assessed for violations of the MARPOL Protocol, Annex IV to the Antarctic Protocol, or regulations issued thereunder, to persons who provide information leading to the assessment of such penalties.

(mmm) Carry out the Great Lakes Pilotage Act of 1960, as amended, (46 U.S.C. 9301 *et seq.*).

(nnn) Under the 1977 Memorandum of Arrangements with Canada and the Great Lakes Pilotage Act of 1960, as amended in 1983 (46 U.S.C. 9305), enter into, revise, or amend arrangements with Canada.

(ooo) Carry out the functions and responsibilities and exercise the authorities vested in the Secretary by the National Defense Authorization Act for Fiscal Year 1998, Pub. L. 105–85, pertaining to authority for personnel to participate in management of certain non-Federal entities (10 U.S.C. Chapters 53 and 81).

(ppp) Carry out the functions and exercise the authority vested in the Secretary by the following statutes:

(1) 16 U.S.C. 5106(h), relating to authorization of a person to enforce a moratorium declared under 16 U.S.C. 5106(c), pursuant to the Atlantic Coastal Fisheries Cooperative Management Act of 1993, as amended, Pub. L. 103–206, 107 Stat. 2447.

(2) 16 U.S.C. 3375(a), relating to the enforcement of the Lacey Act Amendments of 1981, as amended, Pub. L. 97–79, 95 Stat. 1073.

(3) 16 U.S.C. 1540(e) and (f), relating to promulgation of regulations under, and the enforcement of the Endangered Species Act of 1973, as amended, Pub. L. 93–205, 81 Stat. 844.

(4) 16 U.S.C. 971c and 971d, relating to the enforcement of the Atlantic Tunas Convention Act of 1975, as amended, Pub. L. 94–70, 89 Stat. 385.

(5) 16 U.S.C. 972e and 972g, relating to promulgation of regulations under, and enforcement of the Eastern Pacific Tuna Licensing Act of 1984, as amended, Pub. L. 98–445, 98 Stat. 1715.

(6) 16 U.S.C. 5008(a), relating to the enforcement of the North Pacific Anadromous Stocks Convention Act of 1992,

as amended, Pub. L. 102–587, 106 Stat. 5098.

(7) 16 U.S.C. 3636 and 3637, relating to promulgation of regulations under, and the enforcement of the Pacific Salmon Treaty Act of 1985, as amended, Pub. L. No. 99–5, 99 Stat. 7.

(8) 16 U.S.C. 1156 and 1172(a), relating to the enforcement of the Fur Seal Act of 1966, as amended, Pub. L. 89–702, 80 Stat. 1091.

(9) 16 U.S.C. 2409, relating to the enforcement of the Antarctic Conservation Act of 1978, as amended, Pub. L. 95–541, 92 Stat. 2048.

(10) 16 U.S.C. 2434(b), 2436, and 2439, relating to conservation measures and promulgation of regulations under, and enforcement of the Antarctic Living Marine Resources Convention Act of 1984, as amended, Pub. L. 98–623, 98 Stat. 3398.

(11) 16 U.S.C. 773i, relating to the enforcement of the North Pacific Halibut Act of 1982, as amended, Pub. L. 97–176, 96 Stat. 78.

(12) 16 U.S.C. 5506, relating to the enforcement of the High Seas Fishing Compliance Act of 1995, as amended, Pub. L. 104–43, 109 Stat. 367.

(13) 16 U.S.C. 5606(e), relating to the enforcement of the Northwest Atlantic Fisheries Compliance Act of 1995, as amended, Pub. L. 104–43, 109 Stat. 377.

(qqq) Carry out the functions and exercise the authority vested in the Secretary by section 346 of Pub. L. 105–66, titled the Department of Transportation and Related Agencies Appropriations Act, 1998, to establish, operate, and manage the Nationwide Differential Global Positioning System (NDGPS), except for the related function of determining the Federal requirements for the NDGPS, which is delegated to the Federal Railroad Administrator, and except for the related function of acting as lead DOT agency in matters relating to the National Environmental Policy Act, which is delegated to the Federal Highway Administrator.

(rrr) Implement and enforce two mandatory ship reporting systems, in cooperation with the International Maritime Organization, pursuant to the Coast Guard Authorization Act of 1998, (Pub. L. 105–383), section 313, codified at 33 U.S.C. 1230(d).

(sss) Carry out the functions and exercise the authorities vested in the Secretary by sections 203(b), 203(d), and 213(g) of division c, title II, Public Law 105–277, which relate to ownership and control requirements for vessel fishery endorsements for vessels measuring less than 100 feet; and by 203(f) of division c, title II, Public Law 105–277.

(Sec. 9(e), Department of Transportation Act, 49 U.S.C. 1657(e); 49 CFR 1.57(l); 49 U.S.C. 322)

[Amdt. 1–113, 40 FR 43901, Sept. 24, 1975]

EDITORIAL NOTE: For FEDERAL REGISTER citations affecting § 1.46, see the List of CFR Sections Affected in the Finding Aids section of this volume.

§ 1.47 Delegations to Federal Aviation Administrator.

The Federal Aviation Administrator is delegated authority to:

(a) Carry out the powers and duties transferred to the Secretary of Transportation by, or subsequently vested in the Secretary by virtue of, section 6(c)(1) of the Department of Transportation Act (49 U.S.C. 1655(c)(1)), including those pertaining to aviation safety (except those related to transportation, packaging, marking, or description of hazardous materials) and vested in the Secretary by section 308(b) of title 49 U.S.C. and sections 306–309, 312–314, 1101, 1105, and 1111 and titles VI, VII, IX (excluding section 902(h)), and XII of the Federal Aviation Act of 1958, as amended.

(b) Carry out title XIII of the Federal Aviation Act of 1958, as amended (72 Stat. 800; 49 U.S.C. 1531 *et seq.*), relating to aviation insurance.

(c) Carry out the functions vested in the Secretary by the Act of September 7, 1957 (71 Stat. 629; 49 U.S.C. 1324 note), as amended by section 6(a)(3)(B) of the Department of Transportation Act, relating to the guarantee of aircraft purchase loans, and those functions which relate to the issuance of obligations to finance the expenses of such guarantees.

(d) Administer Executive Orders 11419 and 11322 relating to prohibited aviation operations and the prohibited carriage of commodities and products to and from Southern Rhodesia. Carry out the functions vested in the Secretary by Executive Order 12183.

(e) Provide certain facilities and services to FAA employees and their dependents at remote locations (49 U.S.C. 1659).

(f) Carry out the functions vested in the Secretary by:

(1) The Airport and Airway Development Act of 1970, as amended (49 U.S.C. 1701 *et seq.*), except sections 3 and 4 (49 U.S.C. 1702, 1703).

(2) Sections 208 and 209 of the Airport and Airway Revenue Act of 1970, as amended (49 U.S.C. 1742, 1742 note); and

(3) Sections 21, 22, 23(b), 24, and 25 of the Airport and Airway Development Act Amendments of 1976 (49 U.S.C. 1346(a), 1348 note, 1713 note, 1356a, 1704).

(g) Carry out the functions vested in the Secretary by part B of title II of the Clean Air Act, as amended (84 Stat. 1703), and by 40 CFR part 87 as it relates to exemptions from aircraft air pollution standards.

(h) Carry out the functions of the Secretary under section 208 of the Appalachian Regional Development Act of 1965 (85 Stat. 168; 40 U.S.C. App. 208).

(i) Carry out the functions vested in the Secretary by section 902(h)(2) of the Federal Aviation Act of 1958, as amended, as it relates to enforcement of hazardous materials regulations as they apply to the transportation or shipment of such materials by air.

(j) Carry out the functions vested in the Secretary by 49 U.S.C. 1807 as it relates to the establishment of procedures for monitoring and enforcing provisions of regulations with respect to the transportation of radioactive materials on passenger-carrying aircraft.

(k) Carry out the functions vested in the Secretary by 49 App. U.S.C. 1808 (a), (b), and (c), 1809 and 1810 relating to investigations, records, inspections, penalties and specific relief so far as they apply to the transportation or shipment of hazardous materials by air, including the manufacture, fabrication, marking, maintenance, reconditioning, repair, or test of containers which are represented, marked, certified, or sold for use in the bulk transportation of hazardous materials by air.

(l) Serve, or designate a representative to serve, as Vice Chairman and alternate Department of Transportation member of the Interagency Group on International Aviation (IGIA) pursuant to interagency agreement of December 9, 1960, and Executive Order 11382, and provide for the administrative operation of the IGIA Secretariat.

(m) Carry out the functions vested in the Secretary by sections 4(a) and 5(c) of Executive Order 12316 of August 14, 1981 (46 FR 42237, Aug. 20, 1981) (delegating sections 107(c)(1)(c) and 108(b), respectively, of the Comprehensive Environmental Response, Compensation, and Liability Act of 1981, Pub. L. 96–510), insofar as they relate to aircraft.

(n) Carry out the functions vested in the Secretary by section 3(d) of the Act to Prevent Pollution from Ships (33 U.S.C. 1902(d)) as it relates to ships owned or operated by the Federal Aviation Administration when engaged in noncommercial service.

(o) [Reserved]

(p) Carry out the functions vested in the Secretary by:

(1) Section 553(b) of Public Law 99–83 (99 Stat. 226), which relates to the authority of Federal Air Marshals to carry firearms and make arrests, in coordination with the General Counsel; and

(2) The following subsections of section 1115 of the Federal Aviation Act of 1958, as amended, which relates to the security of foreign airports: Subsection 1115(a), in coordination with the General Counsel and the Assistant Secretary for Aviation and International Affairs; subsection 1115(b), in coordination with the Assistant Secretary for Aviation and International Affairs; and subsection 1115(e)(2)(A)(ii), in coordination with the General Counsel and the Assistant Secretary for Aviation and International Affairs.

(q) Carry out all of the functions vested in the Secretary under section 404(d) of the Federal Aviation Act of 1958 (49 U.S.C. 1374(d)), as amended by section 328(a) of the Department of Transportation and Related Agencies Appropriations Act of 1988 (Pub. L. 100–202).

(r) Carry out the functions vested in the Secretary by the Airport Safety and Capacity Expansion Act of 1990, title IX, subtitle B of the Omnibus Budget Reconciliation Act of 1990, Public Law 101–508 (except those functions vested in the Secretary by sections 9113, 9125, 9127 and 9130).

(s) Carry out functions vested in the Secretary by Airport Noise and Capacity Act of 1990, title IX, subtitle D of the Omnibus Budget Reconciliation Act of 1990, Public Law 101–508.

(t) Carry out the functions vested in the Secretary by sections 321 and 410 of the Federal Aviation Act, as amended by the Aviation Security Improvement Act of 1990, Public Law 101–604, November 16, 1990.

(u) Carry out the functions assigned to the Secretary by Executive Order 12465 (February 24, 1984) (3 CFR, 1984 Comp., p. 163) relating to commercial expendable launch vehicle activities.

(v) Carry out the functions vested in the Secretary by 49 U.S.C. Subtitle IX.

(w) Carry out the functions vested in the Secretary by the National Aeronautics and Space Administration Authorization Act, Fiscal Year 1993 (Pub. L. 102–588, 106 Stat 5119, November 4, 1992).

(Secs. 3(e), 6(c), and 9(e), Department of Transportation Act (49 U.S.C. 1652(e), 1655(c), and 1657(e)); 49 U.S.C. 322; 49 CFR 1.57(l))

[Amdt. 1–113, 40 FR 43901, Sept. 24, 1975]

EDITORIAL NOTE: For FEDERAL REGISTER citations affecting §1.47, see the List of CFR Sections Affected in the Finding Aids section of this volume.

§ 1.48 Delegations to Federal Highway Administrator.

The Federal Highway Administrator is delegated authority to:

(a) Investigate and report on the safety compliance records of applicants seeking operating authority, or approval of transactions involving transfer of operating authority, from the Interstate Commerce Commission, and to intervene and present evidence concerning applicants' fitness in Commission proceedings under 49 U.S.C. 307, so far as it relates to motor carriers.

(b) Administer the following sections of title 23, U.S.C.:

(1)(i) 101(a); and

(ii) 101(b), (c), (d), and (e), except as they involve mass transportation projects authorized by sections 103(e)(4), 142(a)(2), or 142(c);

(2) 103, except as it involves the substitution of non-highway public mass transit projects authorized by section (e)(4);

(3) 104, including the apportionment of funds for Federal-aid highways once Congress approves estimates submitted by the Secretary;

(4) 105, except as subsections (a) and (g) involve mass transportation projects authorized by sections 103(e)(4), 142(a)(2), or 142(c);

(5) 106, except subsections (a), (c), and (d) as they involve mass transportation projects authorized by sections 103(e)(4), 142(a)(2), or 142(c);

(6) 107;

(7) 108, except as it involves mass transportation projects authorized by sections 103(e)(4), 142(a)(2), or 142(c);

(8) 109, except subsections (a), (g), and (h) as they involve mass transportation projects authorized by sections 103(e)(4), 142(a)(2), or 142(c);

(9) 110, except as it involves mass transportation projects authorized by sections 103(e)(4), 142(a)(2), or 142(c);

(10) 111;

(11) 112, 113, 114, except as they involve transportation projects authorized by sections 103(e)(4), 142(a)(2), or 142(c);

(12) 115;

(13) 116, except subsections (a) and (c) as they involve mass transportation projects authorized by sections 103(e)(4), 142(a)(2), or 142(c);

(14) 117, except as it involves mass transportation projects authorized by sections 103(e)(4), 142(a)(2), or 142(c);

(15) 118, 119, 120;

(16) 121 and 122, except as they involve mass transportation projects authorized by sections 103(e)(4), 142(a)(2), or 142(c);

(17) 123;

(18) 124, except as it involves mass transportation projects authorized by sections 103(e)(4), 142(a)(2), or 142(c);

(19) 125, 126, and 127;

(20) 128, except as it involves mass transportation projects authorized by sections 103(e)(4), 142(a)(2), or 142(c);

(21) 129, 130, 131, 132, 134, 135, 136, 137, 138, and 139;

(22) 140, except paragraph (a) of this section, as it involved mass transportation projects authorized by sections 103(e)(4), 142(a)(2), or 142(c);

(23) 141, with the concurrence of the National Highway Traffic Safety Administrator as it relates to certification of the enforcement of speed limits;

(24) 142, except as it involves mass transportation projects authorized by subsections (a)(2) and (c) and by 103(e)(4);

(25) 143 and 144;

(26) 145, except as it involves mass transportation projects authorized by sections 103(e)(4), 142(a)(2), or 142(c);

(27) 146 through 152 and 155 through 157, inclusive;

(28) 154 and 158 each with the concurrence of the National Highway Traffic Safety Administrator;

(29) 201 through 205, 210, 212, 214 through 218, (Chapter 2);

(30) 301, 302, and 303;

(31) 304, 305, 306, except as they involve mass transportation projects authorized by sections 103(e)(4), 142(a)(2), or 142(c);

(32) 307 through 314 inclusive;

(33) 315 and 317, except as they involve mass transportation projects authorized by sections 103(e)(4), 142(a)(2), or 142(c);

(34) 318 through 321, inclusive; and

(35) 323 and 324, except as they involve mass transportation projects authorized by sections 103(e)(4), 142(a)(2), or 142(c).

(c) Administer the following laws relating generally to highways:

(1) Sections 105, 107(c) through (e), 123(a) and (b), 124(c), 126(d) through (g), 138(c), 140, 142 through 145, 147 through 154, 167, and 171, and title IV, as amended (as it relates to matters within the primary responsibility of the Federal Highway Administrator), of the Surface Transportation Assistance Act of 1978, Public Law 95–599, 92 Stat. 2689; and sections 502–504, title V, of the Highway Revenue Act of 1978.

(2) Sections 103, 104, 111(b), 128(b), 131, 135, 136, 141, 147, 149, 154, 158 through 161, 163, 203, 206, 401, and 402 of the Federal-Aid Highway Act of 1973, as amended (Pub. L. 93–87, 87 Stat. 250; Pub. L. 93–643, 88 Stat. 2281).

(3) The Federal-Aid Highway Act of 1970, as amended (except section 118) (84 Stat. 1713).

(4) The Federal-Aid Highway Act of 1968, as amended (82 Stat. 815);

(5) The Federal-Aid Highway Act of 1966, as amended (80 Stat. 766);

(6) The Federal-Aid Highway Act of 1962, as amended (76 Stat. 1145, 23 U.S.C. 307 note);

(7) The Federal-Aid Highway Act of 1956, as amended (70 Stat. 374);

(8) The Federal-Aid Highway Act of 1954, as amended (68 Stat. 70);

(9) The Act of September 26, 1961, as amended (75 Stat. 670);

(10) The Highway Revenue Act of 1956, as amended (70 Stat. 387, 23 U.S.C. 120 note);

(11) The Highway Beautification Act of 1965, as amended (79 Stat. 1028, 23 U.S.C. 131 *et seq.*, notes);

(12) The Alaska Omnibus Act, as amended (73 Stat. 141, 48 U.S.C. 21 note prec.);

(13) The Joint Resolution of August 28, 1965, as amended (79 Stat. 578, 23 U.S.C. 101 *et seq.*, notes);

(14) Section 502(c) of the General Bridge Act of 1946, as amended (60 Stat. 847, 33 U.S.C. 525(c));

(15) The Act of April 27, 1962 (76 Stat. 59);

(16) Reorganization Plan No. 7 of 1949 (63 Stat. 1070); and

(17) Sections 102(b) (except subparagraph (2)) and (c); 105 (b)(1) and (c); 141; 146; 147; and 152 of the Federal-Aid Highway Act of 1976 (Pub. L. 94–280; 90 Stat. 425).

(18) The Federal-Aid Highway Act of 1982 (Pub. L. 97–327), except section 6 as it relates to matters within the primary responsibility of the Urban Mass Transportation Administrator.

(19) The Surface Transportation Assistance Act of 1982, Public Law 97–424, as amended,

(i) Except sections 165 and 531 as they relate to matters within the primary responsibility of the Urban Mass Transportation Administrator; 105(f), 413; 414(b)(1) and (2); 421, 426, and title III; and

(ii) Section 414(b)(1), with the concurrence of the National Highway Traffic Safety Administrator.

(20) Sections 103(e), 105(a) through (g), 106(a), and (b), 110(b), 114(d), 117(f), 120(c) and (d), 123(g) and (i), 133(f), 134, 136, 137, 139 through 145, 146(b), 147(c), 149(a) through (f), (h), (i), (k), 151 through 157, 164, and 208 of the Surface

Transportation and Uniform Relocation Assistance Act of 1987 (Pub. L. 100–17, 101 Stat. 132).

(d) Carry out the functions vested in the Secretary of Transportation by section 601 of the Pipeline Safety Act of 1992, Public Law 102–508, relating to construction of the Page Avenue Extension Project in Missouri.

(e) Carry out 49 U.S.C. 3103 relating generally to investigation of the need for regulation of sizes, weights, and combinations of motor vehicles and qualifications and maximum hours of service of employees of motor carriers and motor private carriers.

(f) Carry out 49 U.S.C. 3102 relating generally to qualifications and maximum hours of service of employees and safety of operation and equipment of motor carriers, motor private carriers and motor carriers of migrant workers.

(g) Carry out 49 U.S.C. 503 and 3104 relating generally to service of process, designation of agents to receive service of process, and identification of interstate motor vehicles so far as they pertain to motor private carriers of property and motor carriers of migrant workers (except motor contract carriers).

(h) Carry out the functions and exercise the authority vested in the Secretary by 49 U.S.C., Subtitle IV, Part B,:

(1) Chapter 131;

(2) Chapter 133;

(3) Chapter 135;

(4) Chapter 137, sections 13702(a), 13702(c)(1), 13702(c)(2), 13702(c)(3), 13704, 13707, and 13708;

(5) Chapter 139;

(6) Chapter 141, Subchapter I and sections 14121 and 14122 of Subchapter II;

(7) Chapter 145, sections 14501, 14502, and 14504;

(8) Chapter 147, sections 14701 through 14708; and

(9) Chapter 149, sections 14901 through 14913.

(i) Carry out the functions and exercise the authority vested in the Secretary by sections 104, 403(a), and 408 of the ICC Termination Act of 1995, Pub. L. 104–88, relating to miscellaneous motor carrier provisions, railroad-highway grade crossing regulation and fatigue-related issues pertaining to commercial motor vehicle safety.

(j) Carry out the functions of the Secretary under the Appalachian Regional Development Act of 1965 (79 Stat. 5; 40 U.S.C. App.) except section 208.

(k) Initiate proceedings as a complainant under 49 U.S.C. 10925 to revoke, suspend or amend the certificates, permits or licenses of a motor carrier.

(l) Carry out the Act of September 21, 1966, Public Law 89–599, relating to certain approvals concerned with a compact between the States of Missouri and Kansas.

(m) Carry out the law relating to the Chamizal border highway (80 Stat. 1477).

(n) Carry out the Highway Safety Act of 1966, as amended (80 Stat. 731) and chapter 4 of title 23 U.S.C. as amended by section 207 of the Surface Transportation Assistance Act of 1978 for highway safety programs, research and development relating to highway design, construction and maintenance, traffic control devices, identification and surveillance of accident locations, and highway-related aspects of pedestrian and bicycle safety.

(o) Exercise the authority vested in the Secretary by section 204(b) of the Federal Railroad Safety Act of 1970 (84 Stat. 972, 45 U.S.C. 433(b)) with respect to the laws administered by the Federal Highway Administrator pertaining to highway safety and highway construction.

(p) Carry out the functions vested in the Secretary provided by 42 U.S.C. 4917 relating to procedures for the inspection, surveillance and measurement of commercial motor vehicles for compliance with interstate motor carrier noise emission standards and related enforcement activities including the promulgation of necessary regulations.

(q) Carry out the functions vested in the Secretary by section 5 (as it relates to bridges, other than railroad bridges, not over navigable waters), and section 8(a) (as it relates to all bridges other than railroad bridges) of the International Bridge Act of 1972 (Pub. L. 92–434, 86 Stat. 731).

(r) Carry out the functions vested in the Secretary by the following sections

of the Urban Mass Transportation Act of 1964 as amended (78 Stat. 302, 49 U.S.C. 1601 *et seq.*):

(1) Sections 3(a)(3), 3(e)(1), 5(g)(1), and 8 as they relate to urban planning (49 U.S.C. 1602 (a)(3) and (e)(1), 1603(a), and 1604(g)(1); and 1604(l)).

(2) Section 12(c)(11) relating to approval of boundaries of urbanized areas (49 U.S.C. 1608(c)(11));

(3) Section 18 as it relates to the formula grant program for non-urbanized areas in the Commonwealth of Puerto Rico.

(s) Exercise the authority vested in the Secretary by sections 101, 118, 120(b), 123 and 124 of the Federal-Aid Highway Amendments of 1974 (Pub. L. 93–643, January 4, 1975, 88 Stat. 2281).

(t) [Reserved]

(u)(1) Carry out the functions vested in the Secretary by 49 App. U.S.C. 1808 (a), (b), and (c), 1809, and 1810 relating to investigations, records, inspections, penalties, and specific relief so far as they apply to the transportation or shipment of hazardous materials by highway, including the manufacture, fabrication, marking, maintenance, reconditioning, repair or test of containers which are represented, marked, certified, or sold for use in the bulk transportation of hazardous materials by highway.

(2) Carry out the functions vested in the Secretary by 49 App. U.S.C. 1804 (b) and (c); 1805(d), except paragraph (3) (49 App. U.S.C. 1805(d)(3)); 1811 relating to highway routing, except for pending applications for inconsistency rulings and nonpreemption determinations; 1813(d); and 1819.

(v) Carry out the functions vested in the Secretary by the Commercial Motor Vehicle Safety Act of 1986, title XII of Public Law 99–570, 100 Stat. 3207–170.

(w) Carry out the functions vested in the Secretary by section 30 of the Motor Carrier Act of 1980 (Pub. L. 96–296, 94 Stat. 820), as amended by section 108(b)(5) of Public Law 96–510, 94 Stat. 2767; section 406 of Public Law 97–424, 96 Stat. 2158; and section 222 of Public Law 98–554, 98 Stat. 2846 (49 U.S.C. 10927 note).

(x) Carry out the functions vested in the Secretary by sections 4(a) and (5)(c) of Executive Order 12316 of August 14, 1981 (46 FR 42237, August 20, 1981) (delegating sections 107(c)(1)(C) and 108(b), respectively, of the Comprehensive Environmental Response, Compensation, and Liability Act of 1980, Public Law 96–510, 94 Stat. 2781), insofar as they relate to motor carriers.

(y) Carry out the functions vested in the Secretary by section 118 of the National Visitor Center Facilities Act of 1968 (Pub. L. 90–264, 82 Stat. 43), as added by the Union Station Redevelopment Act of 1981 (Pub. L. 97–125; 95 Stat. 1672), with respect to the completion of the parking facility and associated ramps at Union Station in Washington, DC (40 U.S.C. 818).

(z) Carry out the functions vested in the Secretary by sections 18 and 25(c) of the Bus Regulatory Reform Act of 1982 (Pub. L. 97–261, 96 Stat. 1102), as amended by section 224 of Public Law 98–554, 98 Stat. 2847 (49 U.S.C. 10927 note).

(aa) Carry out the functions vested in the Secretary by the Tandem Truck and Motor Carrier Safety Acts of 1984 (Pub. L. 98–554), except section 209.

(bb) Carry out the functions vested in the Secretary by Public Law 98–229, 98 Stat. 55, insofar as it relates to apportioning certain funds for construction of the Interstate Highway System in Fiscal Year 1985, apportioning certain funds for Interstate substitute highway projects, and increasing amounts available for emergency highway relief.

(cc) Prescribe regulations, as necessary, at parts 24 and 25 of this title, to implement Public Law 91–646, 84 Stat. 1894, and any amendments thereto, as appropriate, in coordination with the Assistant Secretary for Transportation Policy, and carry out all other functions vested in the Secretary by the Uniform Relocation Assistance and Real Property Acquisition Policies Act of 1970, Public Law 91–646, 84 Stat. 1894, and any amendments thereto.

(dd)–(ee) [Reserved]

(ff) Carry out the functions vested in the Secretary of Transportation by section 114 of the ''Act Making Continuing Appropriations for Fiscal Year 1987 and for Other Purposes,'' Public Law 99–591, October 30, 1986, relating to construction of Interstate Highway H–3 in Hawaii.

(gg) Carry out all of the functions vested in the Secretary under section 324 of the Fiscal Year 1986 Department of Transportation Appropriations Act (Pub. L. 99–190, 99 Stat. 1288), notwithstanding the reservation of authority under § 1.44(j) of this part.

(hh) Carry out the functions vested in the Secretary by sections 9, 10, 11, 12, 13, 15(b), 15(c), 15(d), and 15(e) of the Sanitary Food Transportation Act of 1990 (Pub. L. 101–500; 104 Stat. 1213), with respect to transportation by highway.

(ii) Carry out the functions vested in the Secretary by sections 16, 23, 24, and 27 of the Hazardous Materials Transportation Uniform Safety Act of 1990 (Pub. L. 101–615; 104 Stat. 3244 (49 App. U.S.C. 1813 note; 49 U.S.C. 10927 note; 49 App. U.S.C. 2509).

(jj) Carry out the functions and exercise the authority delegated to the Secretary in section 2(d)(2) of Executive Order 12777 (3 CFR, 1991 Comp.; 56 FR 54757), with respect to highway transportation, relating to the approval of means to ensure the availability of private personnel and equipment to remove, to the maximum extent practicable, a worst case discharge, the review and approval of response plans, and the authorization of motor carriers, subject to the Federal Water Pollution Control Act (33 U.S.C. 1321), to operate without approved response plans, except as delegated in § 1.46(m).

(kk) Carry out the functions vested in the Secretary of Transportation by section 505 of the Railroad Revitalization and Regulatory Reform Act of 1976, as amended, relating to the Alameda Corridor Project in consultation with the Federal Railroad Administrator.

(ll) Carry out the function of acting as the lead DOT agency in matters relating to the National Environmental Policy Act pertinent to the authority vested in the Secretary to establish, operate, and manage the Nationwide Differential Global Positioning System (NDGPS) by section 346 of Pub. L. 105–66, titled the Department of Transportation and Related Agencies Appropriations Act, 1998.

(49 U.S.C. 322, 49 CFR 1.57(l))

[Amdt. 1–157, 45 FR 83405, Dec. 18, 1980]

EDITORIAL NOTE: For FEDERAL REGISTER citations affecting § 1.48, see the List of CFR Sections Affected in the Finding Aids section of this volume.

§ 1.49 Delegations to Federal Railroad Administrator.

The Federal Railroad Administrator is delegated authority to:

(a) Investigate and report on safety compliance records of applicants seeking railroad operating authority from the Interstate Commerce Commission, and to intervene and present evidence concerning applicants' fitness in Commission proceedings under 49 U.S.C. 1653(e), relating to railroads.

(b) Carry out the Act of September 30, 1965, as amended (79 Stat. 893, 49 U.S.C. 1631 *et seq.*), relating generally to high speed ground transportation, except issuance of reports required by section 13(c) (49 U.S.C. 1643(c)).

(c) Carry out the following laws relating generally to safety appliances and equipment on railroad engines and cars, and protection of employees and travelers:

(1) The Act of March 2, 1893, as amended (27 Stat. 531, 45 U.S.C. 1 *et seq.*);

(2) The Act of March 2, 1903, as amended (32 Stat. 943, 45 U.S.C. 8 *et seq.*);

(3) The Act of April 14, 1910, as amended (36 Stat. 298, 45 U.S.C. 11 *et seq.*);

(4) The Act of May 30, 1908, as amended (35 Stat. 476, 45 U.S.C. 17 *et seq.*);

(5) The Act of February 17, 1911, as amended (36 Stat. 913, 45 U.S.C. 22 *et seq.*);

(6) The Act of March 4, 1915, as amended (38 Stat. 1192, 45 U.S.C. 30);

(7) Reorganization Plan No. 3 of 1965 (79 Stat. 1320, 45 U.S.C. 22 note);

(8) Joint Resolution of June 30, 1906, as amended (34 Stat. 838, 45 U.S.C. 35);

(9) The Act of May 27, 1908, as amended (35 Stat. 325, 45 U.S.C. 36 *et seq.*);

(10) The Act of March 4, 1909, as amended (35 Stat. 965, 45 U.S.C. 37); and

(11) The Act of May 6, 1910, as amended (36 Stat. 350, 45 U.S.C. 38 *et seq.*).

(d) Carry out the Act of March 4, 1907, as amended (34 Stat. 1415, 45 U.S.C. 61 *et seq.*), relating generally to hours of service of railroad employees.

(e) Carry out the functions vested in the Secretary by section 5 of the International Bridge Act of 1972 (Pub. L. 92–434) as it relates to railroad bridges not over navigable waterways.

(f) Carry out section 25 of the Interstate Commerce Act, as amended (49 U.S.C. 26), relating generally to railroad safety appliances, methods, and systems.

(g) Exercise the administrative powers under the Interstate Commerce Act with respect to powers and duties pertaining to railroad safety transferred to the Secretary (49 U.S.C. 1655(f)).

(h) Operate and administer the Alaska Railroad under the Act of March 12, 1914, as amended (38 Stat. 305), and Executive Order 11107 (28 FR 4225 (1963)).

(i) Make individual and general changes in freight rates and passenger fares for the Alaska Railroad, without power to redelegate authority for general changes in freight rates and passenger fares.

(j) Promote and undertake research and development relating to rail matters generally (49 U.S.C. 1653(a), 1657(e)(1), 1657(n)(1), and 1657(q)(1)).

(k) Carry out the functions vested in the Secretary by subtitle B of the National Visitor Center Facilities Act of 1968, as added by the Union Station Redevelopment Act of 1981 (Pub. L. 97–125; 95 Stat. 1667) except section 114(e) and such parts of section 118 as provided for the completion of the parking facility and associated ramps at Union Station in Washington, DC.

(l) Exercise the authority vested in the Secretary by the Emergency Rail Services Act of 1970 (Pub. L. 91–663) except the authority to make findings required by section 3(a) of that Act and the authority to sign guarantees of certificates issued by trustees.

(m) Carry out the functions vested in the Secretary by the Federal Railroad Safety Act of 1970 (title II of Pub. L. 91–458); 84 Stat. 971, 45 U.S.C. 421 et. seq.), except section 204(b) (84 Stat. 972, 45 U.S.C. 433(b)) with respect to highway, traffic, and motor vehicle safety and highway construction.

(n) Carry out the functions vested in the Secretary by the Emergency Rail Facilities Restoration Act of 1972 (Pub. L. 92–591).

(o) Carry out the functions vested in the Secretary by subsection (b) (except as it relates to conducting consultations with the Administrator of the Environmental Protection Agency) and (c) of section 17 of the Noise Control Act of 1972 (Pub. L. 92–574).

(p) Carry out the functions vested in the Secretary by sections 201(i)(3); 202(b)(7); 203, except authority to issue subpoenas; 210; 212; 213; 215; 402; 403; and 601 of the Regional Rail Reorganization Act of 1973 (Pub. L. 93–236) as amended by the Rail Transportation Improvement Act (Pub. L. 94–555).

(q) Carry out the functions vested in the Secretary by subsections 4 (h) and (i) of the Department of Transportation Act, as amended (49 U.S.C. 1653(h), (i)).

(r) [Reserved]

(s)(1) Carry out the functions vested in the Secretary by 49 App. U.S.C. 1808 (a), (b), and (c), 1809, and 1810 relating to investigations, records, inspections, penalties, and specific relief so far as they apply to the transportation or shipment of hazardous materials by railroad, including the manufacture, fabrication, marking, maintenance, reconditioning, repair or test of containers which are represented, marked, certified, or sold for use in the bulk transportation of hazardous materials by railroad.

(2) Carry out the functions vested in the Secretary by 49 App. U.S.C. 1813 (a) and (b); and 1817.

(t) Carry out the functions vested in the Secretary by sections 204(c); except authority to issue subpoenas; 402; 403; 502; 503; 504; 505; 506, except (c); 507; 508; 511; 512; 513; 515; 517; 606; 610; 703; 704, except (c)(1); and 705; 707; 901; 905, as applicable, of the Railroad Revitalization and Regulatory Reform Act of 1976, as amended, section 5 of the Department of Transportation Act (49 U.S.C. 1654), except authority to issue subpoenas.

(u) Carry out functions vested in the Secretary by sections 17(a) and (b) (as they relate to consultations with the Administrator of the Environmental Protection Agency) of the Noise Control Act of 1972 (Pub. L. 92–574, 49 U.S.C. 1431).

(v) Carry out the functions vested in the Secretary by the Rock Island Railroad Transition and Employee Assistance Act (title I of Pub. L. 96–254) and by section 18 of the Milwaukee Railroad Restructuring Act (49 U.S.C. 916).

(w) Carry out the functions vested in the Secretary by section 305 of the Regional Rail Reorganization Act of 1973, as amended (45 U.S.C. 745).

(x) Carry out the functions vested in the Secretary by sections 4(a) and 5(c) of Executive Order 12316 of August 14, 1981 (46 FR 42237, Aug. 20, 1981) (delegating sections 107(c)(1)(c) and 108(b), respectively, of the Comprehensive Environmental Response, Compensation, and Liability Act of 1981, Pub. L. 96–510), insofar as they relate to rolling stock.

(y) Carry out the functions vested in the Secretary by the Northeast Rail Service Act of 1981 (Pub. L. 97–35).

(z) Carry out the functions vested in the Secretary by section 3 of the Bridge Act of 1906, as amended (33 U.S.C. 493), relating to disputes over the terms and compensation for use of railroad bridges built under the Act.

(aa) Carry out the functions vested in the Secretary by titles II through VII of the Rail Safety and Service Improvement Act of 1982 (Pub. L. 97–468), which relates to rail safety, rail finances, and the transfer of The Alaska Railroad to the State of Alaska.

(bb) Carry out the functions vested in the Secretary by section 4031 of the Budget Reconciliation Act of 1986 (Pub. L. 99–509), which relates to the abolition of the United States Railway Association, and the execution of the functions and duties of the Association transferred to the Secretary, effective April 1, 1987.

(cc) Carry out the functions vested in the Secretary by section 18 (g) and (h) of the Rail Safety Improvement Act of 1988 (Pub. L. 100–342).

(dd) Carry out the function vested in the Secretary by section 1163 of the Bankruptcy Code (11 U.S.C. 1163), which relates to the nomination of trustee for rail carriers in reorganization, with the concurrence of the Office of the General Counsel.

(ee) Carry out the functions vested in the Secretary by sections 9, 10, 11, 12, and 13 of the Sanitary Food Transportation Act of 1990 (Pub. L. 101–500; 104 Stat. 1213), with respect to transportation by railroad.

(ff) Exercise the authority vested in the Secretary by the Crime Control Act of 1990 (Pub. L. 101–647) as it relates to a railroad police officer's authority to enforce the laws of any jurisdiction in which the police officer's rail carrier employer owns property.

(gg) Carry out the functions vested in the Secretary by sections 16 and 21 of the Hazardous Materials Transportation Uniform Safety Act of 1990 (Pub. L. 101–615; 104 Stat. 3244 (49 App. U.S.C. 1813 note and 1817 note)).

(hh) Exercise the authority vested in the Secretary by Section 601 (d) and (e) of the National and Community Service Act of 1990 (45 U.S.C. 546 note) as it relates to the discharge of human waste from railroad passenger cars.

(ii) Carry out the functions and exercise the authority delegated to the Secretary in section 2(d)(2) of Executive Order 12777 (3 CFR, 1991 Comp.; 56 FR 54757), with respect to rail transportation, relating to the approval of means to ensure the availability of private personnel and equipment to remove, to the maximum extent practicable, a worst case discharge, the review and approval of response plans, and the authorization of railroads, subject to the Federal Water Pollution Control Act (33 U.S.C. 1321), to operate without approved response plans, except as delegated in § 1.46(m).

(jj) Exercise the authority vested in the Secretary by the Swift Rail Development Act of 1994, being Title I—High-Speed Rail of Public Law 103–440 (108 Stat. 4615), as it relates to the provision of financial assistance for high-speed rail corridor planning and technology improvements, the promulgation of necessary safety regulations, and the redemption of outstanding obligations and liabilities with respect to the Columbus and Greenville Railway under Sections 505 and 511 of the Railroad Revitalization and Regulatory Reform Act of 1976 (45 U.S.C. 825 and 831, respectively).

(kk) Carry out the functions and exercise the authority vested in the Secretary by 23 U.S.C. 322, titled the Magnetic Levitation Transportation Technology Deployment Program.

(ll) Carry out the function of determining the Federal requirements for the Nationwide Differential Global Positioning System (NDGPS) as a necessary part of the Secretary's authority to establish, operate, and manage the NDGPS granted by Section 346 of Public Law 105–66, titled the Department of Transportation and Related Agencies Appropriations Act, 1998.

[Amdt. 1–113, 40 FR 43901, Sept. 24, 1975]

EDITORIAL NOTE: For FEDERAL REGISTER citations affecting § 1.49, see the List of CFR Sections Affected in the Finding Aids section of this volume.

§ 1.50 Delegation to the National Highway Traffic Safety Administrator.

The National Highway Traffic Safety Administrator is delegated authority to:

(a) Carry out the National Traffic and Motor Vehicle Safety Act of 1966, as amended (15 U.S.C. 1381 *et seq.*).

(b) Carry out the Highway Safety Act of 1966, as amended (23 U.S.C. 401 *et seq.*), except for highway safety programs, research and development relating to highway design, construction and maintenance, traffic control devices, identification and surveillance of accident locations, and highway-related aspects of pedestrian and bicycle safety.

(c) Exercise the authority vested in the Secretary by section 210(2) of the Clean Air Act, as amended (42 U.S.C. 7544(2)).

(d) Exercise the authority vested in the Secretary by section 204(b) of the Federal Railroad Safety Act of 1970 (45 U.S.C. 433(b)) with respect to laws administered by the National Highway Traffic Safety Administrator pertaining to highway, traffic and motor vehicle safety.

(e) Carry out the Act of July 14, 1960, as amended (23 U.S.C. 313 note) and the National Driver Register Act of 1982 (23 U.S.C. 401 note).

(f) Carry out the functions vested in the Secretary by the Motor Vehicle Information and Cost Savings Act of 1972, as amended (15 U.S.C. 1901 *et seq.*), except section 512.

(g) Administer the following sections of title 23, United States Code, with the concurrence of the Federal Highway Administrator:

(1) 141, as it relates to certification of the enforcement of speed limits;

(2) 154 (a), (b), (d), (e), (f), (g) and (h); and

(3) 158.

(h) Carry out the consultation functions vested in the Secretary by Executive Order 11912, as amended.

(i) Carry out section 209 of the Surface Transportation Assistance Act of 1978, as amended (23 U.S.C. 401 note) and section 165 of the Surface Transportation Assistance Act of 1982, as amended (23 U.S.C. 101 note), with respect to matters within the primary responsibility of the National Highway Traffic Safety Administrator.

(j) Administer section 414(b)(1) of the Surface Transportation Assistance Act of 1982, as amended (49 U.S.C. 2314) with the concurrence of the Federal Highway Administrator, and section 414(b)(2).

(k) Carry out section 2(c) of the Truth in Mileage Act of 1986 (15 U.S.C. 1988 note).

(l) Carry out section 204(b) of the Surface Transportation and Uniform Relocation Assistance Act of 1987, Public Law 100–17 (101 Stat. 132) with the coordination of the Federal Highway Administrator.

(m) Carry out the functions vested in the Secretary by section 15(f) of the Sanitary Food Transportation Act of 1990 (Pub. L. 101–500; 104 Stat. 1213).

[Amdt. 1–226, 53 FR 23122, June 20, 1988, as amended by Amdt. 1–239, 56 FR 6810, Feb. 20, 1991]

§ 1.51 Delegations to Urban Mass Transportation Administrator.

The Urban Mass Transportation Administrator is delegated authority to exercise the functions vested in the Secretary by:

(a) The Urban Mass Transportation Act of 1964, as amended (78 Stat. 302, 49 U.S.C. 1601 *et seq.*), except section 18 as it relates to the formula grant program for non-urbanized areas in the Commonwealth of Puerto Rico and section 22, relating to intercity bus service.

(b) Section 1 of Reorganization Plan No. 2 of 1968 (84 Stat. 1369).

(c) Section 10 of the Urban Mass Transportation Assistance Act of 1970, Public Law 91–453, 84 Stat. 962, 968).

(d) Sections 3 and 9 through 15 of the National Capital Transportation Assistance Act of 1969, as amended (D.C. Code, § 1–2441 *et seq*).

(e) The following sections of title 23, United States Code:

(1) 103 as it involves the withdrawal of Interstate routes and the substitution of non-highway public mass transit projects authorized by subsection (e)(4);

(2) 101(a) as it involves approval of boundaries of urban and urbanized areas, 104(f)(4), 105(d), 106(b) as it involves the Federal-aid urban system, and 134; and

(3) 101 (b), (c), (d), and (e); 105 (a) and (g); 106 (a), (c) and (d); 108; 109 (a), (g), and (h); 110; 112; 113; 114; 116 (a) and (c); 117; 121; 122; 124; 128; 140(a); 142; and 145 as they involve mass transportation projects authorized by sections 103(e)(4), 142(a)(2), or 142(c).

(f) Sections 140, 146, 147, 164 and 165 of the Federal-Aid Highway Act of 1973, as amended (Pub. L. 93–87, title I, 87 Stat. 250; Pub. L. 93–643, 88 Stat. 2281).

(g) Section 813 of the Housing and Community Development Act of 1974 (Pub. L. 93–383).

(h) Section 107 of the National Mass Transportation Assistance Act of 1974 (Pub. L. 93–503, November 26, 1974).

(i) Title II of the National Mass Transportation Assistance Act of 1974 (Pub. L. 93–503, November 26, 1974), except sections 204 and 205.

(j) Sections 804, insofar as it relates to 45 U.S.C. 744(e)(5); and 805, as applicable, of the Railroad Revitalization and Regulatory Reform Act of 1976 (Pub. L. 94–210).

(k) Section 148 of the Federal-Aid Highway Act of 1976 (Pub. L. 94–280, 90 Stat. 425).

(l) The following sections of the Surface Transportation Assistance Act of 1978 (Pub. L. 95–599, 92 Stat. 2689): 155, 316, 320, and title IV, as amended (as it relates to matters within the primary responsibility of the Urban Mass Transportation Administrator).

(m) Section 601(d) of the Rail Passenger Service Act, as amended.

(n) Section 2 of Public Law 98–229, 98 Stat. 55, insofar as it relates to apportioning certain funds for Interstate substitute transit projects.

[Amdt. 1–157, 45 FR 83408, Dec. 18, 1980, as amended by Amdt. 1–168, 47 FR 16632, Apr. 19, 1982; Amdt. 1–180, 48 FR 15476, Apr. 11, 1983; Amdt. 1–187, 48 FR 52678, Nov. 21, 1983; Amdt. 1–191, 49 FR 6908, Feb. 24, 1984; Amdt. 1–203, 50 FR 30275, July 25, 1985]

§ 1.52 Delegations to Saint Lawrence Seaway Development Corporation Administrator.

The Administrator of the Saint Lawrence Seaway Development Corporation is delegated authority to:

(a) Carry out the functions vested in the Secretary by sections 4, 5, 6, 7, 8, 12 and 13 of section 2 of the Port and Tanker Safety Act of 1978 (92 Stat. 1471) as they relate to the operation of the St. Lawrence Seaway.

(b) Carry out the functions vested in the Secretary by section 5 of the International Bridge Act of 1972 (Pub. L. 92–434) as it relates to the St. Lawrence River.

(c) Carry out the functions vested in the Secretary by section 3(d) of the Act to Prevent Pollution from Ships (33 U.S.C. 1902(d)) as it relates to ships owned or operated by the Corporation when engaged in noncommercial service.

(d)–(e) [Reserved]

[Amdt. 1–113, 40 FR 43901, Sept. 24, 1975, as amended by 45 FR 48630, July 21, 1980; Amdt. 1–167, 47 FR 11677, Mar. 18, 1982; 60 FR 38971, July 31, 1995; Amdt. 1–272, 60 FR 63450, Dec. 11, 1995; Amdt. 1–292, 63 FR 10782, Mar. 5, 1998]

§ 1.53 Delegations to the Administrator of the Research and Special Programs Administration.

Administration. The Administrator of the Research and Special Programs Administration is delegated authority to exercise powers and perform duties, including duties under the specified statutes as follows:

(a) *Pipelines.* (1) Natural Gas Pipeline Safety Act of 1968, as amended (49 U.S.C. 1671 *et seq.*).

(2) Mineral Leasing Act, as amended (Pub. L. 93–153, 30 U.S.C. 185).

(3) Deepwater Port Act of 1974 (Pub. L. 93–627, 33 U.S.C. 1501 *et seq.*) relating to the establishment, enforcement and review of regulations concerning the safe construction, operation or maintenance of pipelines on Federal lands and

the Outer Continental Shelf (33 U.S.C. 1520).

(4) Section 5 of the International Bridge Act of 1972 (Pub. L. 92–434, 33 U.S.C. 535) as it relates to pipelines not over navigable waterways.

(5) Hazardous Liquid Pipeline Safety Act of 1979, as amended (49 U.S.C. 2001 *et seq.*).

(6) Outer Continental Shelf Lands Act (43 U.S.C. 1331 *et seq.*) as amended, with respect to establishment, enforcement and review of regulations concerning pipeline safety.

(7) Sections 4(a) and 5(c) of Executive Order 12316 of August 14, 1981 (46 FR 42237, August 20, 1981) (delegating sections 107(c)(1)(c) and 108(b), respectively, of the Comprehensive Environmental Response, Compensation, and Liability Act of 1981, Pub. L. 96–510), insofar as they relate to pipelines.

(8) Section 7005 of the Consolidated Omnibus Budget Reconciliation Act of 1985, as it relates to pipeline safety user fees.

(b) *Hazardous materials.* (1) Sections 101–121 of the Hazardous Materials Transportation Act of 1975 (49 App. U.S.C. 1801–1819), as amended by the Hazardous Materials Transportation Uniform Safety Act of 1990 (104 Stat. 3244), except as delegated by §§1.46(t), 1.47(j), 1.48(u)(2), and 1.49(s)(2), and except that the enforcement activities of the Research and Special Programs Administration (RSPA) shall be limited to any matter relating to or concerning any of the following:

(i) Any violation of an exemption or approval issued under that Act;

(ii) Any violation of any requirement for a telephonic or written report of a hazardous materials incident or any other reporting requirement imposed under that Act;

(iii) Any manufacture, fabrication, marking, maintenance, reconditioning, repair, testing, or retesting of any packaging, except modal-specific bulk packaging, which is represented, marked, certified, or sold for use in the transportation of hazardous materials, including any United Nations standard or DOT specification or exemption packaging;

(iv) Any manufacture, fabrication, marking, maintenance, reconditioning, repair, testing, or retesting of any modal-specific bulk packaging, which is represented, marked, certified, or sold for use in the transportation of hazardous materials, including any United Nations standard or DOT specification or exemption packaging, only when requested by the modal administration with primary responsibility for such activity;

(v) Any carrier of hazardous materials only when requested by the modal administration with primary responsibility for inspecting such carrier;

(vi) Any offeror of any hazardous material for transportation with respect to its offering of any hazardous material for transportation in:

(A) Any modal-specific bulk packaging only when requested by the modal administration with primary responsibility for inspecting such packaging; or

(B) Any other packaging.

This delegation to the Administrator of RSPA does not limit the enforcement authority of the Administrators of FHWA, FRA, and FAA, and the Commandant of the Coast Guard under the Hazardous Materials Transportation Act, as amended. Those agencies have enforcement authority over all aspects of the transportation or shipment of hazardous materials by their respective modes, including the manufacture, fabrication, marking, maintenance, reconditioning, repair, testing, or retesting of any bulk packaging intended or represented as intended for use in the transportation of hazardous materials by their respective modes.

(2) Serves as the Department's point of contact and consults with the Environmental Protection Agency on matters arising under section 3003 of the Resources Conservation and Recovery Act (42 U.S.C. 6923) and section 9 of the Toxic Substances Control Act (15 U.S.C. 2608).

(3) Sections 601(c) and 902(h)(1) of the Federal Aviation Act of 1958, as amended (49 U.S.C. 1421 and 1472(h)(1), respectively), as they relate to regulations governing the transportation of hazardous materials by air.

(4) Section 16, 25, 26, and 29 of the Hazardous Materials Transportation Uniform Safety Act of 1990 (Pub. L. 101–615; 104 Stat. 3244 (49 app. U.S.C. 1813 note, 1804 note; 29 U.S.C. 655 note)).

(5) Section 406 of the ICC Termination Act of 1995 (Public Law 104–88) relating to the issuance of regulations concerning the use of certain fiber drum packagings for the transportation of liquid hazardous materials, including contracting for a study by the National Academy of Sciences.

(c) *Passenger and cargo security.* (1) Serve as the Department's point of contact in relationships with Government, state, regional, local and private groups and organizations in matters relative to the Department-wide program for enhancing the safety and security of passengers and cargo in transit.

(d) *Intermodal transport.* (1) Section 4(e) of the International Safe Container Act (Pub. L. 95–208, 91 Stat. 1475).

(2) [Reserved]

(e) *Emergency preparedness.* Carry out the functions related to emergency preparedness vested in the Secretary by 49 U.S.C. 101 and 301 or delegated to the Secretary by or through the Defense Production Act of 1950, 50 U.S.C. App. 2061 *et seq.;* Executive Order 10480, as amended; Executive Order 12148; Executive Order 12656; Executive Order 12742; Reorganization Plan No. 3 of 1978; and such other statutes, executive orders, and other directives as may pertain to emergency preparedness.

(f) *Working Capital Fund for Financing the Activities of the Transportation Systems Center.* (1) Section 207 of Public Law 96–254 (49 U.S.C. 1657(r)), authorizing the Secretary to establish a working capital fund for financing the activities of the Transportation Systems Center.

(2) [Reserved]

(g) [Reserved]

(h) *Science and technology.* (1) With respect to scientific and technological matters, serve as principal advisor to the Secretary and representative of the Department to the academic community, the private sector, professional organizations, and other Government agencies.

(2) Serve as principal liaison official for the Department of Transportation with the Office of Science and Technology Policy in the Executive Office of the President.

(3) Serve as Chairperson of the Department of Transportation's Research and Development Coordinating Council.

(4) Serve as Chairperson of the Department of Transportation Navigation Council.

(5) Serve as primary official responsible for coordination and oversight of the Department's implementation of section 2 of the Federal Technology Transfer Act of 1986 (Pub. L. No. 99–502; 15 U.S.C. 3710a), relating to the transfer of Federal technology to the marketplace.

(i) Carry out the functions vested in the Secretary by sections 4, 5, 6, 7, and 8 of the Sanitary Food Transportation Act of 1990 (Pub. L. 101–500; 104 Stat. 1213).

(j) Section 8 of the Independent Safety Board Act Amendments of 1990 (Pub. L. 101–641; 104 Stat. 4654 (49 app. U.S.C. 1804 note)).

(k)(1) Carry out the functions and exercise the authority delegated to the Secretary in Executive Order 12777 (3 CFR, 1991 Comp.; 56 FR 54757) in section 2(b)(2) relating to the establishment of procedures, methods, and equipment and other requirements for equipment to prevent discharges from, and to contain oil and hazardous substances in, pipelines, motor carriers, and railroads. (See 49 CFR 1.46 and 1.66.)

(2) Carry out the functions and exercise the authority delegated to the Secretary in section 2(d)(2) of Executive Order 12777 (3 CFR, 1991 Comp.; 56 FR 54757) relating to the issuance of regulations requiring the owners or operators of pipelines, motor carriers, and railroads, subject to the Federal Water Pollution Control Act (33 U.S.C. 1321), to prepare and submit response plans, except as delegated in section 1.46(m). For pipelines subject to the Federal Water Pollution Control Act (33 U.S.C. 1321), this authority includes the approval of means to ensure the availability of private personnel and equipment to remove, to the maximum extent practicable, a worst case discharge, the review and approval of response plans, and the authorization of pipelines to operate without approved response plans.

(l) University Grants Program. Sections 11(b) and 11(c) of the Federal Transit Act, as amended, 49 U.S.C. App.

1607c(b) and 1607c(c), except for the provisions in sections 11(b)(8)(b) and 11(b)(10).

[Amdt. 1–130, 43 FR 5516, Feb. 9, 1978]

EDITORIAL NOTE: For FEDERAL REGISTER citations affecting § 1.53, see the List of CFR Sections Affected in the Finding Aids section of this volume.

§ 1.54 Delegations to all Secretarial Officers.

(a) This section sets forth general delegations to the Deputy Secretary, the Deputy Under Secretary, the General Counsel, the Inspector General and the Assistant Secretaries.

(b) Each officer named in paragraph (a) of this section is delegated authority to:

(1) Redelegate and authorize successive redelegations of authority granted by the Secretary within their respective organizations, except as limited by law or specific administrative reservation, including authority to publish those redelegations in appendix A of this part.

(2) Authorize and approve official travel (except foreign travel) and transportation for themselves, their subordinates, and others performing services for, or in cooperation with, the Office of the Secretary. This authority may be redelegated in accordance with regulations issued by the Assistant Secretary for Administration.

(3) Communicate directly with chairmen of Field Coordination Groups provided such communications are largely informational in character and do not conflict with program responsibilities of the operating administrations.

(4) Establish ad hoc committees for specific tasks within their assigned staff area.

(5) Establish, modify, extend, or terminate standing committees within their specific areas of responsibility when directed or authorized to do so by the Secretary.

(6) Designate members of interagency committees when such committees are specifically concerned with responsibilities of direct interest to their office.

(7) Exercise the following authorities with respect to executive level positions (GS–16, 17, or 18 or equivalent) within their respective areas of responsibility:

(i) Determine how executive level positions will be filled; i.e., by reassignment, promotion, appointment.

(ii) Establish selection criteria to be used in identifying eligible candidates.

(iii) Confer with the Administrators on selection criteria and candidates for an executive level position that is a counterpart of an activity or position in the Office of the Secretary.

(iv) Recommend final selection for executive level positions, subject to review by the Executive Committee of the Departmental Executive Personnel Board and approval by the Secretary and the Civil Service Commission.

(v) Serve as ad hoc member of the Departmental Executive Personnel Board at the call of the Chairman and serve on the Board's Executive Committee whenever matters involving their respective offices or a functional counterpart thereof in an operating administration are presented to the Executive Committee for its consideration.

(8) Enter into inter- and intra-departmental reimbursable agreements other than with the head of another department or agency (31 U.S.C. 686). This authority may be redelegated only to office directors or other comparable levels and to contracting officers.

(9) Administer and perform the functions described in their respective functional statements.

(10) Exercise the authority of the Secretary to make certifications, findings and determinations under the Regulatory Flexibility Act (Pub. L. 96–354) with regard to any rulemaking document for which issuance authority is delegated by other sections in this part. This authority may be redelegated to those officials to whom document issuance authority has been delegated.

(11) Exercise the authority of the Secretary to resolve informal allegations of discrimination arising in or relating to their respective organizations through Equal Employment Opportunity counseling or the Alternative

Dispute Resolution process and to develop and implement affirmative action and diversity plans within their respective organizations.

(49 U.S.C. 1657(e)(1))

[Amdt. 1–113, 40 FR 43901, Sept. 24, 1975, as amended by Amdt. 1–114, 41 FR 1288, Jan. 7, 1976; Amdt. 1–157, 45 FR 83408, Dec. 18, 1980; Amdt. 1–159, 46 FR 22593, Apr. 20, 1981; Amdt. 265, 60 FR 2891, Jan. 12, 1995]

§ 1.55 Delegations to Deputy Secretary.

The Deputy Secretary may exercise the authority of the Secretary except where specifically limited by law, order, regulations, or instructions of the Secretary. In addition, the Deputy Secretary is delegated authority to:

(a) Exercise executive control over the Departmental Planning-Programming-Budgeting System.

(b) Serve as Chairman of the Departmental Executive Personnel Board and its Executive Committee.

(c) Originate direct correspondence to chairmen of Field Coordination Groups on overall Departmental matters.

(d) Approve the establishment, modification, extension, or termination of:

(1) Department-wide (intra-department) committees affecting more than one program.

(2) OST-sponsored interagency committees.

(3) All advisory committees (including industry advisory committees) except those sponsored by field activities of the operating administrations.

(e) Approve the designation of:

(1) Departmental representatives and the chairman for interagency committees sponsored by the Office of the Secretary.

(2) Departmental representatives on all advisory committees except those sponsored by a field component of one of the operating administrations or the Materials Transportation Bureau.

(3) Departmental members for international committees.

(f) Authorize and approve official travel and transportation for self, subordinates, and others performing services for or in cooperation with the Office of the Secretary; and authorize and approve official foreign travel of all Departmental personnel and others performing travel for the Department.

(g) Serve as the representative of the Secretary on the board of directors of the National Railroad Passenger Corporation and carry out the functions vested in the Secretary as a member of the board by section 303 of the Rail Passenger Service Act of 1970 (84 Stat. 1330).

(h) Serve as the representative of the Secretary as incorporator, member of the acting board of directors, member of the board of directors, and member of the executive committee of the board of directors, of the United States Railway Association and when so serving carry out the functions vested in the Secretary in each capacity by title II of the Regional Rail Reorganization Act of 1973 (Pub. L. 93–236), as amended.

(i) Serve as the representative of the Secretary as incorporator, member of the interim board of directors established by section 301(c) of the Regional Rail Reorganization Act of 1973 (Pub. L. 93–236), and member of the board of directors, of the Consolidated Rail Corporation and when so serving carry out the functions vested in the Secretary in each capacity by title III of the Regional Rail Reorganization Act of 1973 (Pub. L. 93–236).

[Amdt. 1–113, 40 FR 43901, Sept. 24, 1975, as amended by Amdt. 1–114, 41 FR 1288, Jan. 7, 1976; Amdt. 1–116, 41 FR 20680, May 20, 1976; Amdt. 1–126, 41 FR 56327, Dec. 28, 1976; Amdt. 1–157, 45 FR 83408, Dec. 18, 1980; Amdt. 1–165, 46 FR 55266, Nov. 9, 1981]

§ 1.56 Delegations to the Assistant Secretary for Transportation Policy.

The Assistant Secretary for Transportation Policy is delegated authority to:

(a) Establish policy and maintain oversight of implementation of the National Environmental Policy Act of 1969, as amended (42 U.S.C. 4321–4347) within the Department of Transportation.

(b) Oversee the implementation of section 4(f) of the Department of Transportation Act of 1969 (49 U.S.C. 303).

(c) Represent the Secretary of Transportation on various interagency boards, committees, and commissions

to include the Architectural and Transportation Barriers Compliance Board and the Advisory Council on Historic Preservation.

(d) Except with respect to proceedings under section 4(e) of the Department of Transportation Act (49 U.S.C. 307) relating to safety fitness of an applicant, decide on requests to intervene or appear before administrative agencies to present the views of the Department subject to concurrence by the General Counsel.

(e) Carry out the functions vested in the Secretary by section 656 of the Department of Energy Organization Act (42 U.S.C. 7266) which pertains to planning and implementing energy conservation matters with the Department of Energy. Serves as the Department's principal conservation officer.

[Amdt. 1–261, 59 FR 10063, Mar. 3, 1994]

§ 1.56a Delegations to the Assistant Secretary for Aviation and International Affairs.

The Assistant Secretary for Aviation and International Affairs is delegated authority to:

(a) Represent the Secretary of Transportation on various interagency boards, committees, and commissions to include the Trade Policy Review Group and the Trade Policy Staff Committee.

(b) Except with respect to proceedings under section 4(e) of the Department of Transportation Act (49 U.S.C. 307) relating to safety fitness of an applicant, decide on requests to intervene or appear before administrative agencies to present the views of the Department subject to concurrence by the General Counsel.

(c) Carry out the functions of the Secretary pertaining to aircraft with respect to Transportation Orders T–1 and T–2 (44 CFR chapter IV) under the Act of September 8, 1950, as amended (50 U.S.C. app. 2061 *et seq.*) and Executive Order No. 10480 (3 CFR, 1949–1953 comp., p. 962), as amended.

(d) Serve as Department of Transportation member of the Interagency Group on International Aviation, and pursuant to Executive Order No. 11382 (3 CFR, 1966–1970 comp., p. 691), as amended, serve as Chair of the Group.

(e) Serve as second alternate representing the Secretary of Transportation to the Trade Policy Committee as mandated by Reorganization Plan No. 3 of 1979 (5 U.S.C. app. at 1381 (1988)) and Executive Order No. 12188 (3 CFR, 1980 comp., p. 131), as amended.

(f)(1) As supplemented by 14 CFR part 385, as limited by paragraph (f)(2) of this section, and except as provided in §§ 1.53(g), 1.57(a), and 1.57(s) of this title, carry out the functions transferred to the Department from the Civil Aeronautics Board under the following statutes:

(i) 49 U.S.C. app. 1551(b); and

(ii) Section 4(a)(1) through (4), (6), and (8) through (10) of the Civil Aeronautics Board Sunset Act of 1984 (49 U.S.C. app. 1553(a)(1) through (4), (6), and (8) through (10)).

(2) Insofar as the delegation in this paragraph (f) authorizes review of decisions of the Designated Senior Career Official in the Office of the Assistant Secretary for Aviation and International Affairs under § 1.56b of this title, the authority is limited to approving any such decision or remanding it for reconsideration by the Designated Senior Career Official, with a full written explanation of the basis for the remand.

(g) Carry out the functions vested in the Secretary by the following subsections of section 1115 of the Federal Aviation Act of 1958, as amended, which relates to the security of foreign airports:

(1) Subsection 1115(e)(1), in coordination with the General Counsel, and the Federal Aviation Administrator; and

(2) Subsection 1115(e)(3), in coordination with the General Counsel, the Federal Aviation Administrator, the Assistant Secretary for Governmental Affairs, and the Assistant Secretary for Administration.

(h) Carry out the following statutory provisions relating to consumer protection:

(1) Section 4(a)(5) of the Civil Aeronautics Board Sunset Act of 1984 (49 U.S.C. app. 1553(a)(5)) relating to enforcement of the Consumer Credit Protection Act;

(2) Sections 101(3) (relating to relieving certain carriers from provisions of the Federal Aviation Act), 204 (relating

to taking such actions and issuing such regulations as may be necessary to carry out responsibilities under the Act), 404 (relating to enforcing the duty of carriers to provide safe and adequate service), 407(a) (relating to requiring the production of information), 407(e) (relating to entering carrier property, and inspecting records), 411 (relating to determining whether any carrier or ticket agent is engaged in unfair or deceptive practices or unfair methods of competition), and 416 (relating to establishing just and reasonable classifications of carriers and rules to be followed by each) of the Federal Aviation Act of 1958, as amended, (49 U.S.C. 1301(3), 1324, 1374, 1377 (a) and (e), 1381, and 1386) as appropriate to the consumer protection functions in this paragraph.

(i) Carry out the functions of the Secretary pertaining to a determination of whether a fee imposed upon one or more air carriers by the owner or operator of an airport is reasonable under section 113 of the Federal Aviation Administration Authorization Act of 1994 (August 23, 1994; Pub. L. 103–305; 108 Stat. 1577–1579).

[Amdt. 1–261, 59 FR 10063, Mar. 3, 1994, as amended by Amdt. 1–266, 60 FR 11046, Mar. 1, 1995; Amdt. 1–269, 60 FR 15877, Mar. 28, 1995]

§ 1.56b Delegations to the Designated Senior Career Official, Office of the Assistant Secretary for Aviation and International Affairs.

The Designated Senior Career Official in the Office of the Assistant Secretary for Aviation and International Affairs is delegated exclusive authority to make decisions in all hearing cases to select a carrier for limited-designation international route authority, and in any other case that the Secretary designates, under the authority transferred to the Department from the Civil Aeronautics Board described in §§ 1.56a(f) and 1.57(s) of this title; this includes the authority to adopt, reject or modify recommended decisions of administrative law judges.

[Amdt. 1–261, 59 FR 10064, Mar. 3, 1994, as amended by Amdt. 1–269, 60 FR 15877, Mar. 28, 1995]

§ 1.57 Delegations to General Counsel.

The General Counsel is delegated authority to:

(a) Conduct all rule-making proceedings, except the issuance of final rules, under specific laws relating generally to standard time zones and daylight saving (advanced standard) time.

(b) Determine the practicability of applying the standard time of any standard time zone to the movements of any common carrier engaged in interstate or foreign commerce and issue operating exceptions in any case in which the General Counsel determines that it is impractical to apply the standard time.

(c) Provide and coordinate the Department's counseling service to employees on questions of conflict of interest and other matters of legal import covered by Departmental regulations on employee responsibility and conduct. Assure that counseling and interpretations on these matters are available to designated Deputy Counselors of the Department. Serve as the Department's designee to the Civil Service Commission on these matters.

(d) Serve as the alternate representative of the Secretary on the Board of Directors of the National Railroad Passenger Corporation when so designated by the Secretary or Deputy Secretary and carry out the functions vested in the Secretary as a member of the board by section 303 of the Rail Passenger Service Act of 1970 (84 Stat. 1330).

(e) Review and take final action on referrals of the findings of the Board for Correction of Military Records of the Coast Guard (except with respect to those matters on which the Secretary's authority to take final action is exercised by the Board pursuant to 33 CFR 52.35–15) and the Coast Guard Discharge Review Board.

(f) Approve vacation of suspension of dismissal of military personnel (10 U.S.C. 872(b)).

(g) Grant permission, under specific circumstances, to deviate from a policy or procedure prescribed by part 9 of the regulations of the Office of the Secretary (part 9 of this subtitle) with respect to testimony of OST employees as witnesses in legal proceedings, the serving of legal process and pleadings

in legal proceedings involving the Secretary or his Office, and the production of records of that Office pursuant to subpoena.

(h) Prepare proposed Executive orders and proclamations (including transmittal documents), effect appropriate Departmental coordination, and determine whether the transmittal to the Office of Management and Budget should be submitted over the Secretary's signature or the General Counsel's.

(i) Emboss and affix the official Departmental seal to appropriate documents and other materials, for all purposes for which authentication by seal is required.

(j) Except with respect to proceedings under section 4(e) of the Department of Transportation Act (80 Stat. 934) relating to safety fitness of an applicant, decide on requests to intervene or appear before courts or agencies to present the views of the Department, subject to the concurrence of other interested staff elements in the Office of the Secretary.

(k) Exercise the authority delegated to the Department by the Assistant Attorney General, Land and Natural Resources Division, in his order of October 2, 1970, to approve the sufficiency of the title to land being acquired by purchase or condemnation by the United States for the use of the Department. Redelegation and successive redelegations of this authority may only be made to attorneys within the Department.

(l) Issue regulations making editorial changes or corrections in the Regulations of the Office of the Secretary.

(m) Review and take final action on applications for reconsideration of initial decisions not to disclose unclassified records of the Office of the Secretary requested under 5 U.S.C. 552(a)(3).

(n) Consider, ascertain, adjust, determine, compromise, and settle for an amount not exceeding $25,000, any tort claim arising from the activities of any employee of the Office of the Secretary. Request the approval of the Attorney General for any such award, compromise, or settlement in excess of $25,000 (28 U.S.C. 2672).

(o) Conduct coordination with foreign governments under section 118 of the Deep Seabed Hard Mineral Resources Act (June 21, 1980).

(p) Grant or deny petitions for extension of time to file a document under part 202 of title 46.

(q) Deny petitions for rulemaking or petitions for exemptions in accordance with § 5.13(c) of this title, and notify petitioners of denials in accordance with § 5.13(d) of this title.

(r) Exercise the review authority delegated to the Secretary by the President in Executive Order 12597 of May 13, 1987.

(s) Assist and protect consumers in their dealings with the air transportation industry and assist state and local organizations in handling airline consumer complaints. Carry out 49 U.S.C. 40113 and 41771 as appropriate to those functions.

(10 U.S.C. 1552; 49 U.S.C. 1655(b); 49 U.S.C. 322; 49 CFR 1.57(l))

[Amdt. 1–113, 40 FR 43901, Sept. 24, 1975]

EDITORIAL NOTE: For FEDERAL REGISTER citations affecting § 1.57, see the List of CFR Sections Affected in the Finding Aids section of this volume.

§ 1.57a Delegations to Deputy General Counsel.

The Deputy General Counsel is delegated authority to:

(a) Appear on behalf of the Department on the record in hearing cases, and to initiate and carry out enforcement actions on behalf of the Department, under the authority transferred to the Department from the Civil Aeronautics Board as described in §§ 1.56a(f) and 1.57(s). This includes the authority to compromise penalties under 49 U.S.C. 46301; to issue appropriate orders, including cease and desist orders, under 49 U.S.C. 46101; and to require the production of information, enter carrier property and inspect records and inquire into the management of the business of a carrier under 49 U.S.C. 41711, as appropriate to the enforcement responsibilities. In carrying out these functions, the Deputy General Counsel is not subject to the supervision of the General Counsel.

(b) Initiate and carry out enforcement actions relating to:

(1) Foreign airport security on behalf of the Department under 49 U.S.C. 44907; and

(2) The Consumer Credit Protection Act under section 4(a)(5) of the Civil Aeronautics Board Sunset Act of 1984 (October 4, 1984; Pub. L. 98–443). In carrying out these functions, the Deputy General Counsel is not subject to the supervision of the General Counsel.

[Amdt. 1–269, 60 FR 15877, Mar. 28, 1995]

§ 1.57b Delegations to the Assistant General Counsel for Environmental, Civil Rights, and General Law.

Administer 5 U.S.C. 552 and 49 CFR part 7 in connection with the records of the Office of the Secretary (including the Office of the Inspector General) and issue procedures to ensure uniform Departmental implementation of statutes and regulations regarding public access to records.

[Amdt. 1–228, 54 FR 10010, Mar. 9, 1989, as amended by Amdt. 1–261, 59 FR 10064, Mar. 3, 1994]

§ 1.58 Delegations to Assistant Secretary for Budget and Programs.

The Assistant Secretary for Budget and Programs is delegated authority to:

(a) Exercise day-to-day operating management responsibility over the Office of Programs and Evaluation and the Office of Budget.

(b) Direct and manage the Departmental planning, evaluation, and budget activities.

(c) Request apportionment or reapportionment of funds by the Office of Management and Budget, provided that no request for apportionment or reapportionment which anticipates the need for a supplemental appropriation shall be submitted to the Office of Management and Budget without appropriate certification by the Secretary.

(d) Issue allotments or allocations of funds to components of the Department.

(e) Authorize and approve official travel and transportation for staff members of the Immediate Office of the Secretary including authority to sign and approve related travel orders and travel vouchers, but not including requests for overseas travel.

(f) Issue monetary authorizations for use of reception and representation funds.

(g) Act for the Secretary and Deputy Secretary with respect to certain budgetary and administrative matters relating to the Immediate Office of the Secretary.

(h) Provide Congressional Notification for Energy Savings Performance Contracts (ESPCs) with cancellation ceilings in excess of $750,000, pursuant to the National Energy Conservation Policy Act, as amended, 42 U.S.C. 8287 et seq.

[Amdt. 1–130, 42 FR 58754, Nov. 11, 1977. Redesignated by Amdt. 1–157, 45 FR 83409, Dec. 18, 1980, as amended by Amdt. 1–293, 63 FR 33589, June 19, 1998]

§ 1.59 Delegations to the Assistant Secretary for Administration.

The Assistant Secretary for Administration is delegated authority for the following:

(a) *Acquisition.* (1) Exercise procurement authority with respect to requirements of the Office of the Secretary.

(2) Make the required determinations with respect to mistakes in bids relative to sales of personal property conducted by the Office of the Secretary without power of redelegation.

(3) Carry out the functions vested in the Secretary by sections 3 and 4(b) (as appropriate) of Executive Order 11912.

(4) Carry out the functions delegated to the Secretary from time to time by the Administrator of General Services to lease real property for Department use.

(b) *Personnel.* (1) Conduct a personnel management program for the Office of the Secretary with authority to take, direct others to take, recommend or approve any personnel action with respect to such authority.

(2) Serve as Vice Chairman of the Departmental Executive Resources Board and its Executive Resources Review Committee.

(3) Exercise emergency authority to hire without the prior approval of the Deputy Secretary normally required by Departmental procedures implementing general employment limitations when in the judgment of the Assistant Secretary immediate action is

necessary to effect the hire and avoid the loss of a well-qualified job applicant, and for similar reasons.

(4) Review proposals of the Office of the Secretary for each new appointment or transfer to:

(i) Verify the essentiality of the position, and

(ii) [Reserved]

(5) Approve employment of experts and consultants in accordance with 5 U.S.C. 3109.

(6) Serve as Vice Chairman of the Departmental Executive Personnel Board and its Executive Committee.

(7) Issue final interpretations for the Department and its administrations on matters arising under section 7117 of title VII of the Civil Service Reform Act of 1978.

(8) Develop, coordinate, and issue wage schedules for Department employees under the Federal Wage System, except as delegated to the Commandant of the Coast Guard at § 1.46.

(c) *Finance.* (1) Administer the financial and fiscal affairs of the Office of the Secretary (other than those for which the Assistant Secretary for Budget and Programs is responsible), in accordance with 31 U.S.C. 3512.

(2) Designate to the Treasury Department certifying officers and designated agents for the Office of the Secretary and imprest fund cashiers for the Departmental headquarters. (Redelegation to the Director of Financial Management is contained in subpart C, § 1.59a.)

(3) In accordance with 31 U.S.C. 3527, grant or recommend relief from accountability for losses or deficiencies of disbursing officers, cashiers, or other accountable officers as follows:

(i) Grant relief for losses or deficiencies of less than $500 for which charges or exceptions have not been raised by the General Accounting Office.

(ii) Recommend relief by the Comptroller General for all other losses or deficiencies.

(4) Settle and pay claims by employees of the Office of the Secretary, except at the Transportation System Center, for personal property losses, as provided by 31 U.S.C. 241(b).

(5) Waive claims and make refunds in connection with claims of the United States for erroneous payment of pay and allowances or of travel, transportation, and relocation expenses and allowances to an employee of the Office of the Secretary in amounts aggregating not more than $1,500 without regard to any repayments, and deny requests for waiver of such claims regardless of the aggregate amount of the claim, as provided by 4 CFR parts 91, 92, and 93. This authority may be redelgated only to the Director of Financial Management.

(6) Compromise, suspend collection action on, or terminate claims of the United States not exceeding $100,000 (excluding interest) which are referred to, or arise out of the activities of, the Office of the Secretary.

(7) Determine the existence and amount of indebtedness and the method of collecting repayments from employees of the Office of the Secretary and collect repayments accordingly, as provided by 5 U.S.C. 5514. This authority may be redelegated only to the Director of Financial Management.

(8) Sign Budget Execution reports required by OMB Circular A–34, for the Office of the Secretary. (Redelegation to the Director of Financial Management is contained in subpart C, § 1.59a.)

(9) Review and approve for payment any voucher for $25 or less the authority for payment of which is questioned by a certifying or disbursing officer. (Redelegation to the Director of Financial Management is contained in subpart C, § 1.59a.)

(10) Approve cash purchases of emergency passenger transportation services costing over $100 under FPMR G–72, as amended.

(11) Perform accounting and related functions in support of the essential air service program.

(12) Carry out the functions and obligations assigned to the Secretary with respect to the Prompt Payment Act, Public Law 97–177.

(13) Carry out the functions and duties assigned to the Secretary with respect to the Debt Collection Act of 1982, Public Law 97–365.

(d) *Special funds.* Except as otherwise delegated, establish or operate, or both, such special funds as may be required by statute or by administrative

determination. This excludes the Working Capital Fund (49 U.S.C. 327).

(e) *Security.* (1) Represent the Secretary on the National Communications Security Committee and Interdepartmental Committee on Internal Security.

(2) Issue identification media ''by direction of the Secretary''.

(3) Classify information in the interests of national defense.

(4) Take certain classified actions on behalf of the Department in connection with counter-audio programs.

(5) Authorize exceptions to investigative standards for National Defense Executive Reservists.

(6) Determine when emergencies, other than attack on the United States, justify activation of Personnel Security Regulations issued by the Secretary.

(7) Approve exceptions to the Personnel Security regulations issued by the Secretary.

(8) Request the Office of Personnel Management to modify investigative requirements in other areas.

(9) Ensure Department-wide compliance with Executive Orders 10450, 12829, 12958, 12968, and related regulations and issuances.

(f) *Printing.* (1) Request approval of the Joint Committee on Printing, Congress of the United States, for any procurement or other action requiring Committee approval.

(2) Certify the necessity for Departmental periodicals and request approval of the Director of the Office of Management and Budget (OMB Circular No. A–3 Revised as of Sept. 8, 1960).

(g) *Document authentication.* Emboss and affix the official Departmental seal to appropriate documents and other materials, for all purposes for which authentication by seal is required.

(h) *Foreign travel.* Review written requests for modification to the Department's foreign travel plan approved by the Office of Management and Budget.

(i) *Gifts and bequests.* Carry out the functions vested in the Secretary by section 9(m) of the Department of Transportation Act (Pub. L. 89–670).

(j) *Building management.* Carry out the functions vested in the Secretary by sections 1(b) and 4(b) (as appropriate) of Executive Order 11912.

(k) *Privacy.* Issue notices of Department of Transportation systems of records as required by the Privacy Act of 1974 (5 U.S.C. 552a(e)(4), (11)).

(l) *Hearings.* Provide logistical and administrative support to the Department's Office of Hearings.

(m) *Paperwork reduction.* Carry out the functions and responsibilities assigned to the Secretary with respect to the Paperwork Reduction Act of 1980, Public Law 96–511.

(n) *Federal real property management.* Carry out the functions assigned to the Secretary with respect to Executive Order 12512 of April 28, 1985.

(o) *The Uniform Relocation Assistance and Real Property Acquisition Policies Act of 1970, Public Law 91–646, 84 Stat. 1894.* Except as provided in §§1.45, 1.48 and 49 CFR 25.302, the functions, powers, and duties of the Secretary of Transportation, with respect to the Uniform Relocation Assistance and Real Property Acquisition Policies Act of 1970, are delegated to the Assistant Secretary for Administration with respect to programs administered by the Office of the Secretary. This authority is subject to the requirements listed in §1.45 that govern all Operating Administrations' authority with respect to the Uniform Relocation Assistance and Real Property Acquisition Policies Act of 1970.

(p) *Regulations.* Issue Department of Transportation procurement regulations, subject to the following limitation:

(1) *Coordination.* The views of the General Counsel, the interested administrations and other offices will be solicited in the development of the procurement regulations. In commenting upon proposed provisions for the procurement regulations, the administrations will indicate the nature and purpose of any additional implementing or supplementing policy guidances which they propose to issue at the administration level.

(2) [Reserved]

[Amdt. 1–113, 40 FR 43901, Sept. 24, 1975]

EDITORIAL NOTE: For FEDERAL REGISTER citations affecting §1.59, see the List of CFR Sections Affected in the Finding Aids section of this volume.

§ 1.59a Redelegations by the Assistant Secretary for Administration.

(a) The Assistant Secretary for Administration has redelegated to the Director of Acquisition and Grant Management authority to procure and authorize payment for property and services for the Office of the Secretary, with power to redelegate and authorize successive redelegations.

(b) The Assistant Secretary for Administration has redelegated to the Director of Personnel authority to:

(1) Conduct a personnel management program for the Office of the Secretary with authority to take, direct others to take, recommend or approve any personnel action with respect to such authority.

(2) Develop, coordinate, and issue wage schedules for Department employees under the Federal Wage System, except as delegated to the Commandant of the Coast Guard at § 1.46 of this part.

(c) The Assistant Secretary for Administration has redelegated to the Director of Financial Management authority to:

(1) Designate to the Treasury Department certifying officers and designated agents for the Office of the Secretary and imprest fund cashiers for the Departmental Headquarters.

(2) Certify to the validity of obligations as required by 31 U.S.C. 200 and to the adequacy of bond coverage for the designations under section 160(c)(2).

(3) Sign reports on Budget Execution as required by OMB Circular A–34 (Revised).

(4) Review and approve for payment any voucher for $25 or less the authority for payment of which is questioned by a certifying or disbursing officer.

(5) Process essential air service payments.

(6) Approve claims of OST employees allowable under 31 U.S.C. 3721 for amounts of $500 or less.

[Amdt. 1–209, 51 FR 29233, Aug. 15, 1986, as amended by Amdt. 1–232, 54 FR 46616, Nov. 6, 1989]

§ 1.60 Delegations to the Inspector General.

The Inspector General is delegated, and has agreed to carry out, the following:

(a) *Aviation economics.* The conduct of audits under 49 U.S.C. 1389; and 49 U.S.C. 1377(e).

(b) [Reserved]

[Amdt. 1–199, 49 FR 50997, Dec. 31, 1984]

§ 1.61 Delegations to Assistant Secretary for Governmental Affairs.

The Assistant Secretary for Governmental Affairs is delegated authority to:

(a) Establish procedures for responding to Congressional correspondence.

(b) Serve as the Department's point of contact in relationships with public and private organizations and groups devoted to consumer and community services or affairs.

(c) Serve as coordinator for intra-Departmental consumer affairs programs.

[Amdt. 1–157, 45 FR 83409, Dec. 18, 1980, as amended by Amdt. 1–199, 49 FR 50997, Dec. 31, 1984; Amdt. 1–205, 50 FR 52468, Dec. 24, 1985; Amdt. 1–269, 60 FR 15877, Mar. 28, 1995]

§ 1.62 Delegations to the Director of Small and Disadvantaged Business Utilization.

The Director of Small and Disadvantaged Business Utilization is delegated authority to:

(a) Exercise Departmental responsibility for the implementation and execution of functions and duties under sections 8 and 15 of the Small Business Investment Act, as amended (15 U.S.C. 637 and 644).

(b) Carry out the functions vested in the Secretary by section 906 of the Railroad Revitalization and Regulatory Reform Act of 1976 (Pub. L. 94–210), as amended.

[Amdt. 1–157, 45 FR 83409, Dec. 18, 1980]

§ 1.63 Delegations to Assistant to the Secretary and Director of Public Affairs.

The Assistant to the Secretary and Director of Public Affairs is delegated authority to:

(a) [Reserved]

(b) Monitor the overall public information program and review and approve Departmental informational materials having policy-making ramifications before they are printed and disseminated.

(c) Carry out the functions vested in the Secretary by section 4(b) (as appropriate) of Executive Order 11912.

(d) Carry out the functions to promote carpooling and vanpooling which were vested in the Federal Energy Administration by section 381(b)(1)(B) of the Energy Policy and Conservation Act and transferred to the Department of Transportation by section 310 of the Department of Energy Organization Act of 1977.

[Amdt. 1–113, 40 FR 43901, Sept. 24, 1975, as amended by Amdt. 1–118, 41 FR 35849, Aug. 25, 1976; Amdt. 1–157, 45 FR 83409, Dec. 18, 1980; Amdt. 1–184, 48 FR 44079, Sept. 27, 1983; Amdt. 1–228, 54 FR 10010, Mar. 9, 1989; Amdt. 1–261, 59 FR 10064, Mar. 3, 1994]

§ 1.64 Delegations to the Director, Transportation Administrative Service Center.

The Director, Transportation Administrative Service Center (TASC), is delegated authority to operate the Working Capital Fund (49 U.S.C. 327).

[Amdt. 1–285, 62 FR 16499, Apr. 7, 1997]

§ 1.65 Authority to classify information.

(a) E.O. 12356 confers upon the Secretary of Transportation authority to originally classify information as Secret and Confidential with further authorization to delegate this authority. (No official of the Department of Transportation has authority to originally classify information as Top Secret.)

(b) The following delegations of this authority, which may not be redelegated, are hereby made:

(1) *Office of the Secretary (OST).* Chief, Security Staff.

(2) *U.S. Coast Guard (USCG).* The Commandant; Chief, Office of Operations.

(3) *Federal Aviation Administration (FAA).* The Administrator; Director of Civil Aviation Security.

(4) *Maritime Administration (MARAD).* The Administrator; Associate Administrator for Policy and Administration (Confidential only); Director, Office of International Activities (Confidential only); Chief, Division of National Security Plans (Confidential only).

(c) Authority to originally classify information as Secret or Confidential is delegated to the following officials to become effective automatically upon declaration of civil readiness level Initial Alert or the comparable military readiness level. If invoked, this authority is automatically terminated when both civil and military levels return to the level of Communications Watch or comparable readiness state.

(1) *OST.* Deputy Secretary; Assistant Secretary for Transportation Policy; Assistant Secretary for Aviation and International Affairs; Assistant Secretary for Administration.

(2) *USCG.* Vice Commandant; Chief of Staff; Commander, Atlantic Area; Commander, Pacific Area; Commanders, Coast Guard Districts; Commander, Coast Guard Activities, Europe; Chief, Intelligence and Security Division.

(3) *FAA.* Deputy Administrator; Directors, FAA Regions and Centers.

(4) *MARAD.* Deputy Administrator; Region Directors; Heads of ALFA, BRAVO, and CHARLIE Emergency Teams when activated.

(d) Although the delegations of authority are expressed above in terms of positions, the authority is personal and is vested only in the individual occupying the position. The authority may not be exercised ''by direction of'' a designated official. The formal appointment or assignment of an individual to one of the identified positions, a designation in writing of an individual to act in the absence of one of these officials, or the exercise by an individual of the powers of one of these officials by operation of law, however, conveys the authority to originally classify information.

(e) Previous delegations of authority to Department of Transportation officials to originally classify information as Secret and Confidential are hereby rescinded.

[Amdt. 1–195, 49 FR 26594, June 28, 1984, as amended by Amdt. 1–261, 59 FR 10061, 10064, Mar. 3, 1994]

§ 1.66 Delegations to Maritime Administrator.

With the exception of those authorities delegated to the Maritime Subsidy

Board in §1.67 of this title, the Maritime Administrator is delegated authority to:

(a) Carry out sections 9, 12, 14a, 21a, 37, 38, 40, 41, and 42 of the Shipping Act, 1916, as amended (46 App. U.S.C. 801 *et seq.*);

(b) Carry out the Merchant Marine Act, 1920, as amended (46 App. U.S.C. 861 *et seq.*), including the Ship Mortgage Act, 1920, as amended (46 App. U.S.C. 921 *et seq.*);

(c) Carry out the Merchant Marine Act, 1928, as amended (46 App. U.S.C. 891 *et seq.*);

(d) Carry out section 7 of the Intercoastal Shipping Act, 1933, as amended (46 App. U.S.C. 843 *et seq.*);

(e) Carry out the Merchant Marine Act, 1936, as amended (46 App. U.S.C. 1101 *et seq.*); except the authority delegated to the Administrator of the National Oceanic and Atmospheric Administration relating to the establishment of capital construction fund agreements under section 607 thereof and the granting of financing guarantees under title XI thereof, with respect to vessels in the fishing trade or industry;

(f) Carry out the Merchant Ship Sales Act of 1946, as amended (50 U.S.C. App. 1735 *et seq.*);

(g) Carry out the Suits in Admiralty Act (1920), as amended (46 App. U.S.C. 741 *et seq.*);

(h) Carry out the Civilian Nautical School Act, 1940 (46 App. U.S.C. 1331 *et seq.*);

(i) Carry out the Act of June 2, 1951 (46 App. U.S.C. 1241a) regarding the ''Vessel Operations Revolving Fund'';

(j) Carry out the Act of August 9, 1954 (50 U.S.C. 196 *et seq.*) commonly called the Emergency Foreign Vessels Acquisition Act;

(k) Carry out the Merchant Marine Decorations and Medals Act of 1988 (46 App. U.S.C. 2001 *et seq.*);

(l) Carry out the Maritime Academy Act of 1958, as amended (46 App. U.S.C. 1381 *et seq.*);

(m) Carry out the Act of May 16, 1972, as amended (86 Stat. 140) authorizing sale or purchase of certain passenger vessels;

(n) Carry out the Act of August 22, 1972 (86 Stat. 618) authorizing sale of Liberty ships for use as artificial reefs;

(o) Carry out section 717 of the Act of October 26, 1972 (86 Stat. 1184) commonly known as the Department of Defense Appropriations Act, 1973, and similar subsequent enactments, with respect to transferring or otherwise making available vessels under the jurisdiction of the Maritime Administration to another Federal agency or, similarly, accepting vessels from another Federal agency;

(p) Carry out the provisions of sections 10 through 13 of Public Law 103–451, the National Maritime Heritage Act of 1994, 108 Stat. 4769, 4778–4782;

(q) Exercise the authority vested in the Administrator of General Services by the Act of June 1, 1948, Pub. L. 80–566, 62 Stat. 281, 40 U.S.C. 318–318c and the Federal Property and Administrative Services Act of 1949, as amended, 63 Stat. 377, and delegated by the Administrator of General Services on May 8, 1995, relating to the enforcement of laws for the protection of property and persons at the United States Merchant Marine Academy, located in Kings Point, New York. This may be accomplished through appointment of uniformed personnel as special police, establishment of rules and regulations governing conduct on the affected property, and execution of agreements with other Federal, State, or local authorities. This delegation shall remain in effect through May 1, 2000;

(r) Carry out the responsibilities of the National Shipping Authority (initially established by the Secretary of Commerce effective March 13, 1951) in the capacity of Director, National Shipping Authority;

(s) Carry out the Maritime Education and Training Act of 1980 (46 App. U.S.C. 1295), as amended;

(t) Carry out all other activities previously vested in the Secretary of Commerce and transferred pursuant to Public Law 97–31;

(u) Carry out the functions vested in the Secretary by section 3(d) of the Act to Prevent Pollution from Ships (33 U.S.C. 1902(d)) as it relates to ships owned or operated by the Maritime Administration when engaged in noncommercial service;

(v) Carry out the responsibilities and exercise the authorities of the Secretary of Transportation under the

Maritime Security Act of 1996, Public Law 104–239;

(w) Carry out the provisions of subtitle B of Public Law 101–624;

(x) Carry out the responsibilities and exercise the authorities of the Secretary of Transportation under sections 1008, 1009, and 1013 of Public Law 104–324;

(y) Carry out the functions vested in the Secretary by the Oil Pollution Act of 1990 (August 18, 1990; Pub. L. 101–380; 104 Stat. 484) in sections 4115(f) relating to vessel financing and 4117 relating to a feasibility study of an oil pollution prevention program. (See 49 CFR 1.46 and 1.53).

(z) Carry out the functions vested in the Secretary by Section 2927, Title XXIX of the National Defense Authorization Act of 1994 (Public Law 103–160; November 30, 1993) relating to authority to convey surplus real property to public entities for use in the development or operation of port facilities.

(aa) Carry out the following powers and duties vested in the Secretary by the Deepwater Port Act of 1974, as amended (33 U.S.C. 1501–1524):

(1) The authority to process applications for the issuance, transfer, or amendment of a license for the construction and operation of a deepwater port (33 U.S.C. 1503(bb)) in coordination with the Commandant of the Coast Guard.

(2) Approval of fees charged by adjacent coastal States for use of a deepwater port and directly related land-based facilities (33 U.S.C. 1504(h)(2)).

(3) In collaboration with the Assistant Secretary for Aviation and International Affairs and the Assistant Secretary for Transportation Policy, consultation with the Secretary of State relating to international actions and cooperation in the economic, trade and general transportation policy aspects of the ownership and operation of deepwater ports (33 U.S.C. 1510).

(4) Submission of notice of the commencement of a civil suit (33 U.S.C. 1515(b)(2)).

(5) Intervention in any civil action to which the Secretary is not a party (33 U.S.C. 15150).

(6) Authority to request the Attorney General to seek the suspension or termination of a deepwater port license and to initiate a proceeding before the Surface Transportation Board (33 U.S.C. 1507, 1511(a)).

(bb) Carry out the functions and exercise the authorities vested in the Secretary by sections 3602, 3603, and 3605 of Public Law 105–261, titled the Strom Thurmond National Defense Authorization; and sections 427 and 428 of Public Law 105–383, titled the Coast Guard Authorization Act of 1998.

(cc) Carry out the functions and exercise the authority vested in the Secretary to make the necessary determinations concerning the employment of a vessel under sections 502 and 503 of title V, Pub. L. 105–383, titled the Coast Guard Authorization Act of 1998.

(dd) Carry out the functions and exercise the authorities vested in the Secretary by sections 202(b), 203(b), 203(g), and 213(g) of division c, title II, Public Law 105–277, which relate to ownership and control requirements for vessel fishery endorsements for vessels measuring 100 feet and greater.

[Amdt. 1–164, 46 FR 47459, Sept. 28, 1981]

EDITORIAL NOTE: For FEDERAL REGISTER citations affecting § 1.66, see the List of CFR Sections Affected in the Finding Aids section of this volume.

§ 1.67 Delegations to Maritime Subsidy Board.

(a) The Maritime Subsidy Board is delegated authority to:

(1) Carry out all functions previously vested in the Secretary of Commerce pursuant to section 105(1) (except the last proviso thereto and readjustments in determinations of operating cost differentials not requiring a hearing and contractual changes reducing or realigning service requirements not involving additional subsidy or requiring a section 605(c) hearing under the Act (46 App. U.S.C. 1175(c)), section 105(2), and, insofar as applicable to these functions, section 105(3) of Reorganization Plan No. 21 of 1950, and section 202(b)(1) of Reorganization Plan No. 7 of 1961, except investigations, hearings and determinations, including changes in determinations, with respect to minimum manning scales, minimum wage scales, and minimum working conditions referred to in section 301(a) of the Merchant Marine Act, 1936, as amended (46 App. U.S.C. 1101 *et seq.*).

(2) Carry out all functions previously vested in the Secretary of Commerce pursuant to section 103(e) of Reorganization Plan No. 7 of 1961 and section 202(b)(2) (except requiring the filing of reports, accounts, records, rates, charges, and memoranda under section 21 of the Shipping Act, 1916, as amended, and making reports and recommendations to Congress) and section 202(b)(3) of Reorganization Plan No. 7 of 1961, insofar as said functions relate to the functions described in paragraph (a)(1) of this section.

(3) Execute and sign, by and through any member of the Board or the Secretary or an Assistant Secretary of the Board, contracts and other documents authorized or approved by the Board pursuant to paragraphs (a)(1) and (a)(2) of this section. The execution of such contracts or documents may be attested, under the seal of the Department of Transportation, by the Secretary or an Assistant Secretary of the Maritime Subsidy Board.

(b) The Maritime Subsidy Board may exercise other authorities of the Secretary of Transportation as applicable to performing the functions assigned to the Board in this part.

(c) The Board is composed of the Maritime Administrator, the Deputy Maritime Administrator, and the Chief Counsel of the Administration, and during a vacancy in any one of those offices, the person acting in such capacity shall be a member of the Board, unless the Secretary of Transportation designates another person. In case there still is a vacancy in the Board or in the absence or disability of one of its members, the Secretary of the Maritime Administration and Maritime Subsidy Board, or any other persons designated by the Secretary of Transportation, shall act as a member or members of the Board. Each member of the Board, while serving in that capacity, shall act pursuant to direct authority from the Secretary of Transportation and exercise judgment independent of authority otherwise delegated to the Maritime Administrator. The Maritime Administrator or the Acting Maritime Administrator serves as Chairperson of the Board. The concurring votes of two members shall be sufficient for the disposition of any matter which may come before the Board.

(d) The Chairperson of the Maritime Subsidy Board may make use of officers and employees of the Maritime Administration to perform activities for the Board. Employees of the Maritime Administration may be designated as the Secretary or Assistant Secretaries of the Board.

[Amdt. 1–164, 46 FR 47460, Sept. 28, 1981, as amended by Amdt. 1–211, 51 FR 29471, Aug. 18, 1986; Amdt. 1–247, 56 FR 59893, Nov. 26, 1991]

§ 1.68 [Reserved]

§ 1.69 Delegations to the Director of Intelligence and Security.

The Director of Intelligence and Security is delegated authority to:

(a) Carry out the functions assigned to the Secretary by the Aviation Security Improvement Act of 1990, section 101 (Pub. L. 101–508; November 16, 1990) relating to intelligence and security matters for all modes of transportation.

(b) [Reserved]

[Amdt. 1–237, 56 FR 5958, Feb 14, 1991]

§ 1.70 Delegations to the Director of the Departmental Office of Civil Rights.

The Director of the Departmental Office of Civil Rights is delegated authority to conduct all stages of the formal internal discrimination complaint process (including the acceptance or rejection of complaints); to provide policy guidance to the operating administrations and Secretarial officers concerning the implementation and enforcement of all civil rights laws, regulations and executive orders for which the Department is responsible; to otherwise perform activities to ensure compliance with external civil rights programs; and to review and evaluate the operating administrations' enforcement of these authorities.

These authorities include:

(a) Title VII of the Civil Rights Act of 1964, *as amended,* 42 U.S.C. 2000e *et seq.*

(b) Title VI of the Civil Rights Act of 1964, *as amended,* 42 U.S.C. 2000d *et seq.*

(c) Section 504 of the Rehabilitation Act of 1973, *as amended,* 29 U.S.C. 794 and 794a.

(d) Section 501 of the Rehabilitation Act of 1973, *as amended,* 29 U.S.C. 791.

(e) Age Discrimination in Employment Act of 1967, *as amended,* 29 U.S.C. 621 *et seq.*

(f) Age Discrimination Act of 1975, *as amended,* 42 U.S.C. 6101.

(g) Americans with Disabilities Act of 1990, Pub. L. No. 101–336, 104 Stat. 327 (1990) (codified at 42 U.S.C. 12101–121213).

(h) Equal Pay Act of 1963 (enacted as section 6(d) of the Fair Labor Standards Act of 1938, 29 U.S.C. 206(d)).

(i) Alcohol, Drug Abuse, and Mental Health Administration Reorganization Act, 42 U.S.C. 290dd(b).

(j) 29 CFR Parts 1600 through 1691 (Equal Employment Opportunity Commission Regulations).

(k) Department of Transportation Coast Guard Military Justice Manual, CG–488, Part 700–9 (Civil Rights Complaints).

(l) Title VIII of the Civil Rights Act of 1968, *as amended,* 42 U.S.C. 3601 *et seq.* (fair housing provisions).

(m) The Federal Property and Administrative Services Act of 1949, 40 U.S.C. 476.

(n) Title IX of the Education Amendments Act of 1972, 20 U.S.C. 1681.

(o) Executive Order No. 12898, Federal Actions To Address Environmental Justice in Minority Populations and Low-Income Populations. (In coordination with the Assistant Secretary for Transportation Policy.)

(p) 49 U.S.C. 47113, 47107, and 47123 (formerly sections 505(f), 511(a)(17), and 520 of the Airport and Airway Improvement Act of 1982, *as amended*).

(q) 49 U.S.C. 41705 (formerly the Air Carrier Access Act of 1986, *as amended*).

(r) The Federal-Aid Highway Act, *as amended,* 23 U.S.C. 140 and 324.

(s) 49 U.S.C. 306.

(t) 49 U.S.C. 5310, 5332 (formerly sections 16 and 19 of the Federal Transit Act, *as amended*).

(u) The Intermodal Surface Transportation Efficiency Act of 1991, Pub. L. 102–240, 105 Stat. 1919, section 1003.

(v) The Highway Safety Act of 1966, *as amended,* 23 U.S.C. 402(b)(1)(D).

[Amdt. 265, 60 FR 2891, Jan. 12, 1995]

§ 1.71 Delegations to the Director of the Bureau of Transportation Statistics.

The Director of the Bureau of Transportation Statistics is delegated authority to exercise powers and perform duties under the following statutes:

(a) *Aviation information.* (1) 49 U.S.C. 329(b)(1), relating to collection and dissemination of information on civil aeronautics;

(2) Section 4(a)(7) of the Civil Aeronautics Board Sunset Act of 1984 (October 4, 1984; Pub. L. 98–443), relating to the reporting of the extension of unsecured credit to political candidates (section 401, Federal Election Campaign Act of 1971; 2 U.S.C. 451), in conjunction with the General Counsel and the Assistant Secretary for Aviation and International Affairs; and

(3) 49 U.S.C. 40113 (relating to taking such actions and issuing such regulations as may be necessary to carry out responsibilities under the Act), 49 U.S.C. 41702 (relating to the duty of carriers to provide safe and adequate service), 49 U.S.C. 41708 and 41709 (relating to the requirement to keep information and the forms in which it is to be kept), and 49 U.S.C. 41701 (relating to establishing just and reasonable classifications of carriers and rules to be followed by each) as appropriate to carry out the responsibilities under this paragraph in conjunction with the General Counsel and the Assistant Secretary for Aviation and International Affairs.

(b) *Motor carrier information.* 49 U.S.C. 14123, relating to the collection and dissemination of information on motor carriers.

[Amdt. 1–270, 60 FR 30196, June 8, 1995, as amended by Amdt. 282, 61 FR 68163, Dec. 27, 1996]

§ 1.72 Delegations to the Office of the Chief Information Officer.

(a) Carry out all functions and responsibilities assigned to the Secretary with respect to the Paperwork Reduction Act of 1995 (44 U.S.C. 3506);

(b) Carry out all functions and responsibilities assigned to the Secretary with respect to the Clinger-Cohen Act of 1996 (40 U.S.C. 1422 to 1424, 1427);

(c) Carry out all functions and responsibilities assigned to the Secretary

with respect to the Computer Security Act of 1987 (40 U.S.C. 759, 759 notes);

(d) Approve waivers to Federal Information Processing Standards (FIPS) under Section 5131 of the Clinger-Cohen Act of 1996 (40 U.S.C. 1441); and

(e) Carry out all the functions and responsibilities assigned to the Secretary with respect to Executive Order 13011, Federal Information Technology, Section 2, paragraphs (a), (b), (d), (e), and (f).

[Amdt. 1–290, 62 FR 51804, Oct. 3, 1997]

APPENDIX A TO PART 1—DELEGATIONS AND REDELEGATIONS BY SECRETARIAL OFFICERS

1. *Director of Budget.* The Assistant Secretary for Budget and Programs has redelegated to the Director of Budget authority to:

(a) Request apportionment and reapportionment of funds by the Office of Management and Budget, provided that no request for apportionment or reapportionment which anticipates the need for a supplemental appropriation shall be submitted to the Office of Management and Budget without appropriate certification by the Secretary.

(b) Issue allotments or allocations of funds to components of the Department.

2. *Chief Counsel, U.S. Coast Guard.* (a) The General Counsel, as Judge Advocate General for the U.S. Coast Guard, has delegated to the Chief Counsel, U.S. Coast Guard, pursuant to the Uniform Code of Military Justice, chapter 47 of title 10, United States Code, authority to exercise the following powers and duties:

(1) The authority to recommend assignment for duty of judge advocates under Article 6(a), section 806(a) of title 10, United States Code.

(2) The authority to make field inspections in connection with the administration of military justice under Article 6(a) section 806(a) of Title 10, United States Code.

(3) The authority to designate military judges; to make assignments of, and exercise direct responsibility for, military judges; and to assign, or approve the performance of, other duties of a judicial or nonjudicial nature by military judges under Article 26(c), section 826(c) of title 10, United States Code.

(4) The authority to forward to a Court of Military Review records that must be referred to a Court of Military Review under Article 66(b), section 866(b) of title 10, United States Code.

(5) The authority to instruct the convening authority to take action in accordance with the decision of the Court of Military Review or dismiss the charges under Article 66(e), section 866(e) of title 10, United States Code.

(6) The authority to modify or vacate findings and sentences in cases not reviewed by a Court of Military Review under Article 69, section 869 of title 10, United States Code.

(7) The authority to certify counsel as competent to perform the duties of trial counsel and defense counsel of a general court-martial under 10 U.S.C. 827(b), Art. 27(b) UCMJ.

(8) The authority to detail appellate Government counsel and appellate defense counsel to perform duties in connection with the review of court-martial cases by the Court of Military Review, the Court of Military Appeals and the Supreme Court.

(9) The authority to perform any other duty and exercise any other power which the General Counsel is authorized or required to perform under the Uniform Code of Military Justice or the Manual for Courts-Martial, with the exception of the following which are reserved to the General Counsel or his or her delegatee within the Office of the General Counsel:

(i) Authority to certify commissioned officers as qualified for duty as military judges under Article 26(b), section 826(b) of title 10, United States Code.

(ii) Authority to establish a Court of Military Review and designate a chief judge of the court under Article 66(a), section 866(a) of title 10, United States Code.

(iii) Authority to order cases sent to the Court of Military Appeals under Article 67(b)(2), section 867(b)(2) of title 10, United States Code.

(iv) Authority to examine records of general courts-martial not reviewed under Article 66, section 866 of title 10, United States Code, and modify or set aside the findings or the sentence, or refer the record to the Court of Military Review under Article 69(a), section 869(a) of title 10, United States Code.

(v) Authority to prescribe rules not inconsistent with the Manual for Courts-Martial to govern the professional supervision and discipline of military trial and appellate judges, judge advocates, and other lawyers who practice in proceedings governed by the UCMJ and Manual for Courts-Martial.

(vi) Authority to make the recommendation of the Judge Advocate General in a court-martial case requiring approval by the Secretary or the President.

(vii) Authority to approve a vacation of supension of dismissal of military personnel.

(b) The authority delegated by paragraph (a)(3) of this section may be redelegated only to the Deputy Chief Counsel.

(c) The Chief Counsel shall make an annual summary report of his actions taken under paragraph (a)(6) of this section of this delegation to the General Counsel of the Department of Transportation (including the number of cases subject to that authority, the number of applications for review filed, and

the disposition thereof) for inclusion, as appropriate, in the Judge Advocates General and Court of Military Appeals report to Congress required by Article 67(g), section 867(g) of title 10, United States Code.

3. *Chief Counsels.* The General Counsel has delegated to the Chief Counsels the authority delegated to the General Counsel by Amendment 1–41 to part 1 of title 49, Code of Federal Regulations, 35 FR 17653, November 17, 1970, as follows:

Section 855 of the Revised Statutes, as amended by Public Law 91–393, 84 Stat. 835 (40 U.S.C. 255) authorizes the Attorney General to delegate to other departments and agencies his authority to give written approval of the sufficiency to the title to land being acquired by the United States. The Attorney General has delegated to the Assistant Attorney General in charge of the Land and Natural Resources Division the authority to make delegations under that law to other Federal departments and agencies (35 FR 16084; 28 CFR 0.66). The Assistant Attorney General, Land and Natural Resources Division, has further delegated certain responsibilities in connection with the approval of the sufficiency of the title to land to the Department of Transportation as follows:

DELEGATION TO THE DEPARTMENT OF TRANSPORTATION FOR THE APPROVAL OF THE TITLE TO LANDS BEING ACQUIRED FOR FEDERAL PUBLIC PURPOSES

Pursuant to the provision of Public Law 91–393, approved September 1, 1970, 84 Stat. 835, amending R.S. 355 (40 U.S.C. 255), and acting under the provisions of Order No. 440–70 of the Attorney General, dated October 2, 1970, the responsibility for the approval of the sufficiency of the title to land for the purpose for which the property is being acquired by purchase or condemnation by the United States for the use of your Department is, subject to the general supervision of the Attorney General and to the following conditions, hereby delegated to your Department.

This delegation of authority is further subject to:

1. Compliance with the regulations issued by the Assistant Attorney General on October 2, 1970, a copy of which is enclosed.

2. This delegation is limited to:

(a) The acquisition of land for which the title evidence, prepared in compliance with these regulations, consists of a certificate of title, title insurance policy, or an owner's duplicate Torrens certificate of title.

(b) The acquisition of lands valued at $100,000 or less, for which the title evidence consists of abstracts of title or other types of title evidence prepared in compliance with said regulations.

As stated in the above-mentioned Act, any Federal department or agency which has been delegated the responsibility to approve land titles under the Act may request the Attorney General to render his opinion as to the validity of the title to any real property or interest therein, or may request the advice or assistance of the Attorney General in connection with determinations as to the sufficiency of titles.

The Chief Counsels of the United States Coast Guard, Federal Aviation Administration, Federal Highway Administration, Federal Railroad Administration, National Highway Traffic Safety Administration, Urban Mass Transportation Administration, the St. Lawrence Seaway Development Corporation, Maritime Administration, and Research and Special Programs Administration are hereby authorized to approve the sufficiency of the title to land being acquired by purchase or condemnation by the United States for the use of their respective organizations. This delegation is subject to the limitations imposed by the Assistant Attorney General, Land and Natural Resources Division, in his delegation to the Department of Transportation. Redelegation of this authority may only be made by the Chief Counsels to attorneys within their respective organizations.

If his organization does not have an attorney experienced and capable in the examination of title evidence, a Chief Counsel may, with the concurrence of the General Counsel, request the Attorney General to (1) furnish an opinion as to the validity of a title to real property or interest therein, or (2) provide advice or assistance in connection with determining the sufficiency of the title.

(49 CFR 1.45(a) and 1.53(a); 49 U.S.C. 322)

[Amdt. 1–113, 40 FR 43901, Sept. 24, 1975]

EDITORIAL NOTE: For FEDERAL REGISTER citations affecting appendix A to part 1, see the List of CFR Sections Affected in the Finding Aids section of this volume.

PART 3—OFFICIAL SEAL

AUTHORITY: 49 U.S.C. 102(e).

SOURCE: Amdt. 3–3, 45 FR 75666, Nov. 17, 1980, unless otherwise noted.

§3.1 Description.

The official seal of the Department of Transportation is described as follows: A white abstract triskelion figure signifying motion appears within a circular blue field. The figure is symmetrical. The three branches of the figure curve outward in a counter-clockwise direction, each tapering almost to a point at the edge of the field. Surrounding the blue circle is a circular ring of letters. The upper half of the

ring shows the words ''Department of Transportation''. The lower half of the ring shows the words ''United States of America''. The letters may be shown in either black or medium gray. The official seal of the Department is modified when embossed. It appears below in black and white.

PART 5—RULEMAKING PROCEDURES

Subpart A—General

Sec.
5.1 Applicability.
5.3 Initiation of rulemaking.
5.5 Participation by interested persons.
5.7 Regulatory docket.

Subpart B—Petitions for Rulemaking or Exemptions

5.11 Filing of petitions.
5.13 Processing of petitions.

Subpart C—Procedures

5.21 General.
5.23 Contents of notices.
5.25 Petitions for extension of time to comment.
5.27 Consideration of comments received.
5.29 Additional rulemaking proceedings.
5.31 Hearings.
5.33 Adoption of final rules.
APPENDIX A TO PART 5

AUTHORITY: Sec. 9, 80 Stat. 944 (49 U.S.C. 1657).

SOURCE: 32 FR 10363, July 14, 1967, unless otherwise noted.

Subpart A—General

§ 5.1 Applicability.

(a) This part prescribes general rulemaking procedures that apply to the issue, amendment, and repeal of rules of the Secretary of Transportation. It does not apply to rules issued by the National Transportation Safety Board, U.S. Coast Guard, Federal Aviation Administration, Federal Highway Administration, Federal Railroad Administration, Urban Mass Transportation Administration, National Highway Traffic Safety Administration, or St. Lawrence Seaway Development Corporation.

(b) For the purposes of this part, *Secretary* means the Secretary of Transportation or the Under Secretary of Transportation, or any of the following to whom the Secretary has delegated authority to conduct rulemaking proceedings:

(1) Any Assistant Secretary.

(2) The General Counsel.

Any of these officers may redelegate that authority to the head of any office who reports to him.

(c) Records relating to rulemaking proceedings are available for inspection as provided in part 7 of this subtitle.

[32 FR 10363, July 14, 1967, as amended by Amdt. 5–2, 35 FR 5331, Mar. 31, 1970; Amdt. 5–3, 36 FR 430, Jan. 13, 1971]

§ 5.3 Initiation of rulemaking.

The Secretary initiates rulemaking on his own motion. However, in doing so, he may, in his discretion, consider the recommendations of other agencies of the United States and of other interested persons.

§ 5.5 Participation by interested persons.

Any person may participate in rulemaking proceedings by submitting written information or views. The Secretary may also allow any person to participate in additional rulemaking proceedings, such as informal appearances or hearings, held with respect to any rule.

§5.7 Regulatory docket.

(a) Records of the Office of the Secretary of Transportation concerning rulemaking actions, including notices of proposed rule making, comments received in response to those notices, petitions for rulemaking or exemption, petitions for rehearing or reconsideration, grants and denials of exemptions, denials of petitions for rule making, and final rules are maintained in current docket form in the Office of the General Counsel.

(b) Any person may examine any docketed material at that office and may obtain a copy of any docketed material upon payment of the prescribed fee.

Subpart B—Petitions for Rulemaking or Exemptions

§5.11 Filing of petitions.

(a) Any person may petition the Secretary to issue, amend, or repeal a rule, or for a permanent or temporary exemption from any rule.

(b) Each petition filed under this section must:

(1) Be submitted in duplicate to the Docket Clerk, Office of the General Counsel, Department of Transportation, Washington, DC 20590;

(2) Set forth the text or substance of the rule or amendment proposed, or of the rule from which the exemption is sought, or specify the rule that the petitioner seeks to have repealed, as the case may be;

(3) Explain the interest of the petitioner in the action requested including, in the case of a petition for an exemption, the nature and extent of the relief sought and a description of the persons to be covered by the exemption;

(4) Contain any information and arguments available to the petitioner to support the action sought; and

(5) In the case of a petition for exemption, unless good cause is shown in that petition, be submitted at least 60 days before the proposed effective date of the exemption.

§5.13 Processing of petitions.

(a) *General.* Each petition received under §5.11 of this part is referred to the head of the office responsible for the subject matter of that petition. No public hearing, argument, or other proceeding is held directly on a petition before its disposition under this section.

(b) *Grants.* If the Secretary determines that the petition contains adequate justification, he initiates rulemaking action under subpart C of this part or grants the exemption, as the case may be.

(c) *Denials.* If the Secretary determines that the petition does not justify initiating rule-making action or granting the exemption, he denies the petition.

(d) *Notification.* Whenever the Secretary determines that a petition should be granted or denied, the office concerned and the Office of the General Counsel prepare a notice of that grant or denial for issuance to the petitioner, and the Secretary issues it to the petitioner.

Subpart C—Procedures

§5.21 General.

(a) Unless the Secretary finds, for good cause, that notice is impractical, unnecessary, or contrary to the public interest, a notice of proposed rule making is issued and interested persons are invited to participate in the rulemaking proceedings with respect to each substantive rule.

(b) Unless the Secretary determines that notice and public rulemaking proceedings are necessary or desirable, interpretive rules, general statements of policy, and rules relating to organization, procedure, or practice are prescribed as final without notice or other public rulemaking proceedings.

(c) In his discretion, the Secretary may invite interested persons to participate in the rulemaking proceedings described in §5.29 of this subpart.

§5.23 Contents of notices.

(a) Each notice of proposed rulemaking is published in the FEDERAL REGISTER, unless all persons subject to it are named and are personally served with a copy of it.

(b) Each notice, whether published in the FEDERAL REGISTER or personally served, includes:

(1) A statement of the time, place, and nature of the proposed rule-making proceeding;

(2) A reference to the authority under which it is issued;

(3) A description of the subjects or issues involved or the substance or terms of the proposed rule;

(4) A statement of the time within which written comments must be submitted and the required number of copies; and

(5) A statement of how and to what extent interested persons may participate in the proceeding.

§ 5.25 Petitions for extension of time to comment.

(a) Any person may petition the Secretary for an extension of time to submit comments in response to a notice of proposed rulemaking. The petition must be submitted in duplicate not later than 3 days before expiration of the time stated in the notice. The filing of the petition does not automatically extend the time for petitioner's comments.

(b) The Secretary grants the petition only if the petitioner shows a substantive interest in the proposed rule and good cause for the extension, and if the extension is in the public interest. If an extension is granted, it is granted as to all persons and is published in the FEDERAL REGISTER.

§ 5.27 Consideration of comments received.

All timely comments are considered before final action is taken on a rulemaking proposal. Late filed comments may be considered so far as possible without incurring additional expense or delay.

§ 5.29 Additional rulemaking proceedings.

The Secretary may initiate any further rulemaking proceedings that he finds necessary or desirable. For example, he may invite interested persons to present oral arguments, participate in conferences, appear at informal hearings, or participate in any other proceeding.

§ 5.31 Hearings.

(a) Sections 556 and 557 of title 5, United States Code, do not apply to hearings held under this part. As a fact-finding proceeding, each hearing is nonadversary and there are no formal pleadings or adverse parties. Any rule issued in a case in which a hearing is held is not necessarily based exclusively on the record of the hearing.

(b) The Secretary designates a representative to conduct any hearing held under this part. The General Counsel designates a member of his staff to serve as legal officer at the hearing.

§ 5.33 Adoption of final rules.

Final rules are prepared by representatives of the office concerned and the Office of the General Counsel. The rule is then submitted to the Secretary for his consideration. If the Secretary adopts the rule, it is published in the FEDERAL REGISTER, unless all persons subject to it are named and are personally served with a copy of it.

APPENDIX A TO PART 5

Pursuant to § 5.1(b), the following officials of the Office of the Secretary of Transportation are authorized to conduct rulemaking proceedings under this part, as specified in this appendix:

(1) The General Counsel is authorized to conduct all rule-making proceedings, except the issuance of final rules, under the Act of March 19, 1918, ch. 24, as amended (15 U.S.C. 261–264); the Uniform Time Act of 1966 (80 Stat. 107, 15 U.S.C. 260–267); and section 6(e)(5) of the Department of Transportation Act (80 Stat. 939, 49 U.S.C. 1655 (e)(5)).

(2) The General Counsel is authorized to determine the practicability of applying the standard time of any standard time zone to the movements of any common carrier engaged in interstate or foreign commerce, and, under section 2 of the Act of March 19, 1918, ch. 24, as amended (15 U.S.C. 262), to issue operating exceptions in any case in which he determines that it is impractical to apply the standard time.

[Amdt. 5–1, 32 FR 11473, Aug. 9, 1967]

PART 6—IMPLEMENTATION OF EQUAL ACCESS TO JUSTICE ACT IN AGENCY PROCEEDINGS

Subpart A—General Provisions

Sec.
6.1 Purpose of these rules.
6.3 Applicability.
6.5 Proceedings covered.
6.7 Eligibility of applications.
6.9 Standards for awards.
6.11 Allowable fees and expenses.
6.13 Delegations of authority.

Subpart B—Information Required from Applicants

6.17 Contents of application.
6.19 Net worth exhibit.
6.21 Documentation of fees and expenses.

Subpart C—Procedures for Considering Applications

6.23 Filing and service of documents.
6.25 Answer to application.
6.27 Comments by other parties.
6.29 Settlement.
6.31 Further proceedings.
6.33 Decision.
6.35 Agency review.
6.37 Judicial review.
6.39 Payment of award.

AUTHORITY: 5 U.S.C. 504; 28 U.S.C. 2412.

SOURCE: 48 FR 1070, Jan. 10, 1983, unless otherwise noted.

Subpart A—General Provisions

§6.1 Purpose of these rules.

The Equal Access to Justice Act, 5 U.S.C. 504 (called ''the Act'' in this part), provides for the award of attorney fees and other expenses to eligible individuals and entities who are parties to certain administrative proceedings (called ''adversary adjudications'') before government agencies, such as the Department of Transportation or any of its operating administrations. The rules in this part describe the parties eligible for awards and the proceedings that are covered. They also explain how to apply for awards, and the procedures and standards that this agency will use to make them. The use of the term ''Department'', in this rule, will be understood to mean the Department of Transportation or any of its operating administrations, unless otherwise specified. The term ''agency counsel'' will be understood to mean counsel for the Department of Transportation or any of its operating administrations.

[48 FR 1070, Jan. 10, 1983, as amended at 62 FR 19233, Apr. 21, 1997]

§6.3 Applicability.

Section 6.9(a) applies to any adversary adjudication pending before the Department on or after October 1, 1981. In addition, applicants for awards must also meet the standards of §6.9(b) for any adversary adjudication commenced on or after March 29, 1996.

[62 FR 19233, Apr. 21, 1997]

§6.5 Proceedings covered.

(a) The Act applies to adversary adjudications conducted by the Department of Transportation. These are adjudications under 5 U.S.C. 554 in which the position of the Department is represented by an attorney or other representative who enters an appearance and participates in the proceeding. Coverage of the Act begins at designation of a proceeding or issuance of a charge sheet. Any proceeding in which the Department may prescribe or establish a lawful present or future rate is not covered by the Act. Proceedings to grant or renew licenses are also excluded, but proceedings to modify, suspend, or revoke licenses are covered if they are otherwise ''adversary adjudications.'' For the Department of Transportation, the types of proceedings covered include, but may not be limited to: Coast Guard suspension or revocation of licenses, certificates or documents under 46 U.S.C. 7701 *et seq.*; Coast Guard class II civil penalty proceedings under the Clean Water Act, 33 U.S.C. 1321(b)(6)(B)(ii); Coast Guard class II penalty proceedings under the Comprehensive Environmental Response, Compensation and Liability Act, 42 U.S.C. 9609(b); suspension and revocation of Certificates of Registry proceedings for Great Lakes Pilots pursuant to 46 CFR Part 401; National Highway Traffic Safety Administration (NHTSA) automotive fuel economy enforcement under 49 U.S.C. Chapter 329 (49 CFR Part 511); Federal Highway Administration (FHWA) enforcement of motor carrier safety regulations under

49 U.S.C. 521 and 5123 (49 CFR 386); the Department's aviation economic enforcement proceedings conducted by its Office of Aviation Enforcement and Proceedings pursuant to 49 U.S.C. Subtitle VII, 14 CFR Chapter II. Also covered are any appeal of a decision made pursuant to section 6 of the Contract Disputes Act of 1978 (41 U.S.C. 605) before an agency board of contract appeals as provided in section 8 of that Act (41 U.S.C. 607), any hearing conducted under Chapter 38 of title 31, and the Religious Freedom Restoration Act of 1993, 42 U.S.C. 2000bb *et seq.*

(b) If a proceeding includes both matters covered by the Act and matters specifically excluded from coverage, any award made will include only fees and expenses related to covered issues.

[48 FR 1070, Jan. 10, 1983, as amended at 62 FR 19233, Apr. 21, 1997]

§ 6.7 Eligibility of applications.

(a) To be eligible for an award of attorney fees and other expenses under the Act, the applicant must be a party to an adversary adjudication for which it seeks an award. The term ''party'' is defined in 5 U.S.C. 504(b)(1)(B). The applicant must show that it meets all conditions of eligibility set out in this subpart and in paragraph (b) of this section.

(b) The types of eligible applicants are as follows:

(1) An individual with a net worth of not more than $2 million;

(2) The sole owner of an unincorporated business who has a net worth of not more than $7 million, including both personal and business interests, and not more than 500 employees.

(3) A charitable or other tax-exempt organization as described in section 501(c)(3) of the Internal Revenue Code (26 U.S.C. 501(c)(3)) with not more than 500 employees;

(4) A cooperative association as defined in section 15(a) of the Agricultural Marketing Act (12 U.S.C. 1141j(a)) with a net worth of not more than $5 million and not more than 500 employees.

(5) Any other partnership, corporation, association, or public or private organization with a net worth of not more than $7 million and not more than 500 employees.

(6) For the purposes of § 6.9(b), eligible applicants include small entities as defined in 5 U.S.C. 601.

(c) For the purpose of eligibility, the net worth and number of employees of an applicant shall be determined as of the date the proceeding was designated.

(d) An applicant who owns an unincorporated business will be considered an ''individual'' rather than a ''sole owner of an unincorporated business'' if the issues on which the applicant prevails are related primarily to personal interests rather than to business interests.

(e) The number of employees of an applicant includes all persons who regularly perform services for remuneration for the applicant, under the applicant's direction and control. Part-time employees shall be included on a proportional basis.

(f) The net worth and number of employees of the applicant and all of its affiliates shall be aggregated to determine eligibility. Any individual, corporation or other entity that directly or indirectly controls or owns a majority of the voting shares or other interest of the applicant, or any corporation or other entity of which the applicant directly or indirectly owns or controls a majority of the voting shares or other interest, will be considered an affiliate for purposes of this part, unless the administrative law judge determines that such treatment would be unjust and contrary to the purposes of the Act in light of the actual relationship between the affiliated entities. In addition, the administrative law judge may determine that financial relationships of the applicant other than those described in this paragraph constitute special circumstances that would make an award unjust.

(g) An applicant that participates in a proceeding primarily on behalf of one or more other persons or entities that would be ineligible is not itself eligible for an award.

(h) An applicant who appears *pro se* in a proceeding is ineligible for award of attorney fees. However, eligibility for other expenses is not affected by *pro se* representation.

[48 FR 1070, Jan. 10, 1983, as amended at 62 FR 19234, Apr. 21, 1997]

§6.9 Standards for awards.

(a) An eligible applicant may receive an award for fees and expenses incurred by that party in connection with a decision in favor of the applicant in a proceeding covered by this Part, unless the position of the Department over which the applicant has prevailed was substantially justified or special circumstances make the award sought unjust. The burden of proof that an award should not be made to an eligible applicant is on the Department where it has initiated the proceeding. No presumption arises that the Department's position was not substantially justified simply because the Department did not prevail. Whether or not the position of the Department was substantially justified shall be determined on the basis of the administrative record, as a whole, in the adversary adjudication for which fees and other expenses are sought. The ''position of the Department'' means, in addition to the position taken by the agency in the adversary adjudication, the action or failure to act by the Department upon which the adversary adjudication may be based.

(b) In the context of a Departmental proceeding to enforce a party's compliance with a statutory or regulatory requirement, if the demand by the Department is substantially in excess of the amount awarded to the government pursuant to the decision of the adjudicative officer and is unreasonable when compared with such decision, under the facts and circumstances of the case, the adjudicative officer shall award to an eligible applicant party the fees and expenses related to defending against the excessive demand, unless the applicant party has committed a willful violation of law or otherwise acted in bad faith, or special circumstances make an award unjust. Fees and expenses awarded under this paragraph shall be paid only as a consequence of appropriations provided in advance. As used in this section, ''demand'' means the express demand of the Department which led to the adversary adjudication, but does not include a recitation by the Department of the maximum statutory penalty

(i) In the administrative complaint, or

(ii) Elsewhere when accompanied by an express demand for a lesser amount.

(c) The decision of the Department on the application for fees and other expenses shall be the final administrative decision under this section.

(d) An award will be reduced or denied if the applicant has unduly or unreasonably protracted the proceeding.

[62 FR 19234, Apr. 21, 1997]

§6.11 Allowable fees and expenses.

(a) Awards will be based on rates customarily charged by persons engaged in the business of acting as attorneys, agents or expert witnesses.

(b) No award for the fee of an attorney or agent under these rules may exceed $125.00 per hour. This amount shall include all other expenses incurred by the attorney or agent in connection with the case. No award to compensate an expert witness may exceed the highest market rate at which the Department pays expert witnesses, or $24.09 per hour, whichever is less.

(c) In determining the reasonableness of the fee sought for an attorney, agent or expert witness, the administrative law judge shall consider the following:

(1) If the attorney, agent or witness is in private practice, his or her customary fee for similar services, or, if an employee of the applicant, the fully allocated cost of the services;

(2) The prevailing rate for similar services in the community in which the attorney, agent or witness ordinarily performs services;

(3) The time actually spent in the representation of the applicant;

(4) The time reasonably spent in light of the difficulty or complexity of the issues in the proceeding; and

(5) Such other factors as may bear on the value of the services provided.

(d) The reasonable cost of any study, analysis, engineering report, test, project or similar matter prepared on behalf of a party may be awarded, to the extent that the charge for the service does not exceed the prevailing rate for similar services, and the study or other matter was necessary for preparation of the applicant's case.

(e) Fees may be awarded only for work performed after designation of a proceeding.

[48 FR 1070, Jan. 10, 1983, as amended at 62 FR 19234, Apr. 21, 1997]

§ 6.13 Delegations of authority.

The Secretary of Transportation delegates to the head of each operating administration of this Department the authority to take final action, other than rulemaking, on matters pertaining to the Act in actions that require section 554 proceedings. The head of each operating administration may redelegate this authority.

Subpart B—Information Required from Applicants

§ 6.17 Contents of application.

(a) An application for an award of fees and expenses under the Act shall identify the applicant and the proceeding for which an award is sought. The application shall show that the applicant has prevailed and identify the position of an agency or agencies in the proceeding that the applicant alleges was not substantially justified. Unless the applicant is an individual, the application shall also state that it did not have more than 500 employees at the time the proceeding was initiated, giving the number of employees of the applicant and describing briefly the type and purpose of its organization or business.

(b) The application shall also include a statement that the applicant's net worth does not exceed $1 million (if an individual) or $5 million (for all other applicants, including their affiliates). However, an applicant may omit this statement if:

(1) It attaches a copy of a ruling by the Internal Revenue Service that it qualifies as an organization described in section 501(c)(3) of the Internal Revenue Code (26 U.S.C. 501(c)(3)) or, in the case of a tax-exempt organization not required to obtain a ruling from the Internal Revenue Service on its exempt status, a statement that describes the basis for the applicant's belief that it qualifies under such section; or

(2) It states that it is a cooperative association as defined in section 15(a) of the Agricultural Marketing Act (12 U.S.C. 114j(a)).

(c) The application shall state the amount of fees and expenses for which an award is sought.

(d) The application may also include any other matters that the applicant wishes this agency to consider in determining whether and in what amount an award should be made.

(e) The application shall be signed by the applicant or an authorized officer or attorney of the applicant. It shall also contain or be accompanied by a written verification under oath or under penalty of perjury that the information provided in the application is true and correct.

(f) If the applicant is a partnership, corporation, association, or organization, or a sole owner of an unincorporated business, the application shall state that it did not have more than 500 employees at the time the proceeding was initiated, giving the number of its employees and describing briefly the type and purpose of its organization or business.

§ 6.19 Net worth exhibit.

(a) Each applicant except a qualified tax-exempt organization or cooperative association must provide with its application a detailed exhibit showing the net worth of the applicant and any affiliates (as defined in this part) when the proceeding was designated. If any individual, corporation, or other entity directly or indirectly controls or owns a majority of the voting shares or other interest of the applicant, or if the applicant directly or indirectly owns or controls a majority of the voting shares or other interest of any corporation or other entity, the exhibit must include a showing of the net worth of all such affiliates or of the applicant including the affiliates. The exhibit may be in any form convenient to the applicant that provides full disclosure of the applicant's and its affiliates' assets and liabilities and is sufficient to determine whether the applicant qualifies under the standards in this subpart. The administrative law judge may require an applicant to file additional information to determine its eligibility for an award.

(b) The net worth exhibit shall describe any transfers of assets from, or obligations incurred by, the applicant or any affiliate, occurring in the one-year period prior to the date on which the proceeding was initiated, that reduced the net worth of the applicant and its affiliates below the applicable net worth ceiling. If there were no such transactions, the applicant shall so state.

(c) The net worth exhibit shall be included in the public record of the proceeding.

§6.21 Documentation of fees and expenses.

(a) The application shall be accompanied by full documentation of the fees and expenses, including the cost of any study, analysis, engineering report, test, project or similar matter, for which an award is sought.

(b) The documentation shall include an affidavit from any attorney, agent, or expert witness representing or appearing in behalf of the party, stating the actual time expended and the rate at which fees and other expenses were computed and describing the specific services performed.

(1) The affidavit shall state the services performed. In order to establish the hourly rate, the affidavit shall state the hourly rate which is billed and paid by the majority of clients during the relevant time periods.

(2) If no hourly rate is paid by the majority of clients because, for instance, the attorney or agent represents most clients on a contingency basis, the attorney or agent shall provide information about two attorneys or agents with similar experience, who perform similar work, stating their hourly rate.

(c) The documentation shall also include a description of any expenses for which reimbursement is sought and a statement of the amounts paid and payable by the applicant or by any other person or entity for the services provided.

(d) The administrative law judge may require the applicant to provide vouchers, receipts, or other substantiation for any expenses claimed.

(e) The administrative law judge may, within his or her discretion, make a determination as to whether a study, conducted by the applicant, was necessary to the preparation of the applicant's case.

Subpart C—Procedures for Considering Applications

§6.23 Filing and service of documents.

Any application for an award or other pleading or document related to an application shall be filed and served on all parties to the proceeding in the same manner as other pleadings in the proceeding.

§6.25 Answer to application.

(a) Within 30 calendar days after service of an application, the agency counsel may file an answer to the application. Unless the agency counsel requests an extension of time for filing or files a statement of intent to negotiate under paragraph (b) of this section, failure to file an answer within the 30-day period may be treated as a consent to the award request.

(b) If agency counsel and applicant believe that they can reach a settlement concerning the award, the agency counsel may file a statement of intent to negotiate. The filing of such a statement shall extend the time for filing an answer an additional 30 days.

(c) The answer shall explain in detail any objections to the award requested and identify the facts relied on in support of the Department's position. If the answer is based on any alleged facts not already in the record of the proceeding, the Department shall include with the answer either supporting affidavits or a request for further proceedings under §6.3.

[48 FR 1070, Jan. 10, 1983, as amended at 62 FR 19234, Apr. 21, 1997]

§6.27 Comments by other parties.

Any party to a proceeding, other than the applicant and the Department may file comments on an application within 30 days after it is served or on an answer within 15 days after it is served. A commenting party may not participate further in proceedings on the application.

§ 6.29 Settlement.

The applicant and agency counsel may agree on a proposed settlement of the award before final action on the application, either in connection with a settlement of the underlying proceeding, or after the underlying proceeding has been concluded, in accordance with the agency's standard settlement procedure. If a prevailing party and the agency counsel agree on a proposed settlement of an award before an application has been filed the application shall be filed with the proposed settlement.

§ 6.31 Further proceedings.

(a) Ordinarily, the determination of an award will be made on the basis of the written record. However, on request of either the applicant or agency counsel, or on his or her own initiative, the administrative law judge may order further proceedings, such as an informal conference, oral argument, additional written submissions or an evidentiary hearing.

Such further proceedings shall be held only when necessary for full and fair resolution of the issues arising from the application, and shall be conducted as promptly as possible.

(b) A request that the administrative law judge order further proceedings under this section shall specifically identify the information sought or the disputed issues and shall explain why the additional proceedings are necessary to resolve the issues.

§ 6.33 Decision.

The administrative law judge shall issue an initial decision on the application as soon as possible after completion of proceedings on the application. The decision shall also include, if at issue, findings on whether the Department's position was substantially justified, whether the applicant unduly protracted the proceedings, or whether special circumstances make an award unjust. If the applicant has sought an award against more than one agency, the decision shall allocate responsibility for payment or any award made among the agencies, and shall explain the reasons for the allocation made.

§ 6.35 Agency review.

Where Department review of the underlying decision is permitted, either the applicant or agency counsel, may seek review of the initial decision on the fee application, or the Department may decide to review the decision on its own initiative. If neither the applicant nor the agency counsel seeks review within 30 days after the decision is issued, it shall become final.

§ 6.37 Judicial review.

Judicial review of final agency decisions on awards may be sought as provided in 5 U.S.C. 504(c)(2).

§ 6.39 Payment of award.

An applicant seeking payment of an award from the Department of Transportation or any of its operating administrations under this part shall submit a copy of the Department of Transportation's or any of its operating administration's final decisions granting the award, accompanied by a statement that the applicant will not seek review of the decision in the United States courts. The copy of the decision and the statement should be submitted to the head of the affected operating administration or the Secretary of Transportation, where the Department of Transportation, Office of the Secretary, has initiated the proceedings.

PART 7—PUBLIC AVAILABILITY OF INFORMATION

Subpart A—General Provisions

Sec.
7.1 General.
7.2 Definitions.

Subpart B—Information Required to be Made Public by DOT

7.3 Publication in the FEDERAL REGISTER.
7.4 Publication required.
7.5 Availability of opinions, orders, staff manuals, statements of policy, and interpretations and indices.
7.6 Deletion of identifying detail.
7.7 Access to materials and indices.
7.8 Copies.
7.9 Protection of records.
7.10 Public records.

Subpart C—Availability of Reasonably Described Records Under the Freedom of Information Act

7.11 Applicability.
7.12 Administration of subpart.
7.13 Records available.
7.14 Requests for records.
7.15 Contacts for records requested under the FOIA.
7.16 Requests for records of concern to more than one government organization.
7.17 Consultation with submitters of commercial and financial information.

Subpart D—Procedures for Appealing Decisions Not to Disclose Records and/or Waive Fees

7.21 General.

Subpart E—Time Limits

7.31 Initial determinations.
7.32 Final determinations.
7.33 Extension.

Subpart F—Fees

7.41 General.
7.42 Payment of fees.
7.43 Fee schedule.
7.44 Services performed without charge or at a reduced charge.
7.45 Transcripts.
7.46 Alternative sources of information.

AUTHORITY: 5 U.S.C. 552; 31 U.S.C. 9701; 49 U.S.C. 322; E.O. 12600, 3 CFR, 1987 Comp., p. 235.

SOURCE: Amdt. 1, 63 FR 38331, July 16, 1998, unless otherwise noted.

Subpart A—General Provisions

§7.1 General.

(a) This part implements 5 U.S.C. 552, and prescribes rules governing the availability to the public of DOT records. Many documents are made available to the public for inspection and copying through DOT's Primary Electronic Access Facility and public record unit locations that are discussed in subpart B of this part, which contains the DOT regulations concerning the availability to the public of opinions issued in the adjudication of cases, policy issuances, administrative manuals, and other information made available to the public, without need for a specific request.

(b) Subpart C of this part describes the records that are not required to be disclosed on DOT's own action under this part, but that may be available upon request under FOIA.

(c) Indices are maintained to reflect all records subject to subpart B of this part, and are available for public inspection and copying as provided in subpart B.

§7.2 Definitions.

As used in this part—

Act and *FOIA* mean the Freedom of Information Act, 5 U.S.C. 552, as amended.

Administrator means the head of each DOT component of DOT and includes the Commandant of the Coast Guard, the Inspector General, and the Director of the Bureau of Transportation Statistics.

Concurrence means that the approval of the person being consulted is required in order for the subject action to be taken.

Consultation means that the approval of the person being consulted is not required in order for the subject action to be taken.

Department or *DOT* means the Department of Transportation, including the Office of the Secretary of Transportation, the Office of the Inspector General, and the following DOT components, all of which may be referred to as DOT components. Means of contacting each of these DOT components appear in §7.15. This definition specially excludes the Surface Transportation Board, which has its own FOIA regulations (49 CFR Part 1001):

(1) United States Coast Guard,

(2) Federal Aviation Administration,

(3) Federal Highway Administration,

(4) Federal Railroad Administration,

(5) National Highway Traffic Safety Administration,

(6) Federal Transit Administration,

(7) Saint Lawrence Seaway Development Corporation,

(8) Maritime Administration,

(9) Research and Special Programs Administration, and

(10) Bureau of Transportation Statistics.

Primary Electronic Access Facility means the electronic docket facility in the DOT Headquarters Building, 400 7th Street, S.W., Washington, D.C. 20590.

Reading room records are those records required to be made available to the public under 5 U.S.C. 552(a)(2) as described in §7.5 of Subpart B of this part. These records are made available through DOT's Primary Electronic Access Facility. Other records may also be made available at DOT's discretion at DOT inspection facilities, including DOT's Primary Electronic Access Facility.

Record includes any writing, drawing, map, recording, tape, film, photograph, or other documentary material by which information is preserved. The term also includes any such documentary material stored by computer.

Responsible DOT official means the head of the DOT component concerned, or the General Counsel or the Inspector General, as the case may be, or the designee of any of them, authorized to take an action under this part.

Secretary means the Secretary of Transportation or any person to whom the Secretary has delegated authority in the matter concerned.

Subpart B—Information Required To Be Made Public by DOT

§ 7.3 Publication in the Federal Register.

This section implements 5 U.S.C. 552(a)(1), and prescribes rules governing publication in the FEDERAL REGISTER of the following:

(a) Descriptions of DOT's organization, including its DOT components and the established places at which, the officers from whom, and the methods by which, the public may secure information and make submittals or obtain decisions;

(b) Statements of the general course and methods by which DOT's functions are channeled and determined, including the nature and requirements of all formal and informal procedures available;

(c) Rules of procedure, descriptions of forms available or the places at which forms may be obtained, and instructions as to the scope and contents of all papers, reports, or examinations;

(d) Substantive rules of general applicability adopted as authorized by law and statements of general policy or interpretations of general applicability formulated and adopted by DOT; and

(e) Each amendment, revision, or repeal of any material listed in paragraphs (a) through (d) of this section.

§ 7.4 Publication required.

(a) *General.* The material described in §7.3 will be published in the FEDERAL REGISTER. For the purposes of this paragraph, material that will reasonably be available to the class of persons affected by it will be considered to be published in the FEDERAL REGISTER if it has been incorporated by reference with the approval of the Director of the Federal Register.

(b) *Effect of nonpublication.* Except to the extent that he/she has actual and timely notice of the terms thereof, a person may not in any manner be required to resort to, or be adversely affected by, any procedure or matter required to be published in the FEDERAL REGISTER, but not so published.

§ 7.5 Availability of opinions, orders, staff manuals, statements of policy, and interpretations and indices.

(a) This section implements 5 U.S.C. 552(a)(2). It prescribes the rules governing the availability for public inspection and copying of the following reading room materials:

(1) Any final opinion (including a concurring or dissenting opinion) or order made in the adjudication of a case.

(2) Any policy or interpretation that has been adopted under DOT authority, including any policy or interpretation concerning a particular factual situation, if that policy or interpretation can reasonably be expected to have precedential value in any case involving a member of the public in a similar situation.

(3) Any administrative staff manual or instruction to staff that affects any member of the public, including the prescribing of any standard, procedure, or policy that, when implemented, requires or limits any action of any member of the public or prescribes the manner of performance of any activity by any member of the public. However, this does not include staff manuals or

instructions to staff concerning internal operating rules, practices, guidelines, and procedures for DOT inspectors, investigators, law enforcement officers, examiners, auditors, and negotiators and other information developed predominantly for internal use, the release of which could significantly risk circumvention of agency regulations or statutes.

(4) Copies of all records, regardless of form or format, that have been released to any person under subpart C of this part and which, because of the nature of their subject matter, a DOT component determines have become or are likely to become the subject of subsequent requests for substantially the same records.

(5) A general index of the records listed in this paragraph.

(b) Any material listed in paragraph (a) of this section that is not made available for public inspection and copying, or that is not indexed as required by §7.7, may not be cited, relied on, or used as precedent by DOT to affect any member of the public adversely unless the person to whose detriment it is relied on, used, or cited has had actual timely notice of the material.

(c) This section does not apply to material that is published in the FEDERAL REGISTER or covered by subpart C of this part.

§7.6 Deletion of identifying detail.

Whenever it is determined to be necessary to prevent a clearly unwarranted invasion of personal privacy, identifying details will be deleted from any record covered by this subpart that is published or made available for inspection. Whenever it is determined to be necessary to prevent the disclosure of information required or authorized to be withheld by another Federal statute, such information shall be deleted from any record covered by this subpart that is published or made available for inspection. A full explanation of the justification for the deletion will accompany the record published or made available for inspection.

§7.7 Access to materials and indices.

(a) Except as provided in paragraph (b) of this section, material listed in §7.5 will be made available for inspection and copying to any member of the public at DOT document inspection facilities. It has been determined that it is unnecessary and impracticable to publish the index of materials in the FEDERAL REGISTER. Information as to the kinds of materials available at each facility may be obtained from the facility or the headquarters of the DOT component of which it is a part.

(b) The material listed in §7.5 that is published and offered for sale will be indexed, but is not required to be kept available for public inspection. Whenever practicable, however, it will be made available for public inspection at the appropriate DOT reading room.

(c) Each DOT component will also make the reading room records identified in section 7.5(a) that are created by DOT on or after November 1, 1996, available electronically. This includes indices of its reading room records as required by law after December 1, 1999.

§7.8 Copies

Copies of any material covered by this subpart that is not published and offered for sale may be ordered, upon payment of the appropriate fee, from the Docket Offices listed in §7.10. Copies will be certified upon request and payment of the fee prescribed in §7.43(f).

§7.9 Protection of records.

(a) Records made available for inspection and copying may not be removed, altered, destroyed, or mutilated.

(b) 18 U.S.C. 641 provides for criminal penalties for embezzlement or theft of government records.

(c) 18 U.S.C. 2071 provides for criminal penalties for the willful and unlawful concealment, mutilation or destruction of, or the attempt to conceal, mutilate, or destroy, government records.

§7.10 Public Records.

Publicly available records are located in DOT's Primary Electronic Access Facility at 400 7th Street, S.W., Washington, D.C. 20590.

(a) The Primary Electronic Access Facility maintains materials for the Office of the Secretary, including

former Civil Aeronautics Board material, and materials for the DOT components. This facility is located at Plaza Level 401, and the hours of operation are 10:00–17:00.

(b) Certain DOT components also maintain public record units at regional offices and at the offices of the Commandant and District Commanders of the United States Coast Guard. These facilities are open to the public Monday through Friday except Federal holidays, during regular working hours. The Saint Lawrence Seaway Development Corporation has facilities at 180 Andrews Street, Massena, New York 13662–0520.

(c) Operating Administrations may have separate facilities for manual records. Additional information on the location and hours of operations for Docket Offices and inspection facilities can be obtained through DOT's Primary Electronic Access Facility, at (202) 366–9322.

Subpart C—Availability of Reasonably Described Records Under the Freedom of Information Act

§ 7.11 Applicability.

(a) This subpart implements 5 U.S.C 552(a)(3), and prescribes the regulations governing public inspection and copying of reasonably described records under FOIA.

(b) This subpart does not apply to:

(1) Records published in the FEDERAL REGISTER, opinions in the adjudication of cases, statements of policy and interpretations, and administrative staff manuals that have been published or made available under subpart B of this part.

(2) Records or information compiled for law enforcement purposes and covered by the disclosure exemption described in § 7.13(c)(7) if—

(i) The investigation or proceeding involves a possible violation of criminal law; and

(ii) There is reason to believe that—

(A) The subject of the investigation or proceeding is not aware of its pendency, and

(B) Disclosure of the existence of the records could reasonably be expected to interfere with enforcement proceedings.

(3) Informant records maintained by a criminal law enforcement component of DOT under an informant's name or personal identifier, if requested by a third party according to the informant's name or personal identifier, unless the informant's status as an informant has been officially confirmed.

§ 7.12 Administration of subpart.

Authority to administer this subpart and to issue determinations with respect to initial requests is delegated as follows:

(a) To the General Counsel for the records of the Office of the Secretary other than the Office of Inspector General.

(b) To the Inspector General for records of the Office of Inspector General.

(c) To the Administrator of each DOT component, who may redelegate to officers of that administration the authority to administer this part in connection with defined groups of records. However, each Administrator may redelegate the duties under subpart D of this part to consider appeals of initial denials of requests for records only to his or her deputy or to not more than one other officer who reports directly to the Administrator and who is located at the headquarters of that DOT component.

§ 7.13 Records available.

(a) *Policy*. It is DOT policy to make its records available to the public to the greatest extent possible, in keeping with the spirit of FOIA. This includes providing reasonably segregable information from documents that contain information that may be withheld.

(b) *Statutory disclosure requirement*. FOIA requires that DOT, on a request from a member of the public submitted in accordance with this subpart, make requested records available for inspection and copying.

(c) *Statutory exemptions*. Exempted from FOIA's statutory disclosure requirement are matters that are:

(1)(i) Specifically authorized under criteria established by Executive Order to be kept secret in the interest of national defense or foreign policy, and

(ii) In fact properly classified pursuant to such Executive order;

(2) Related solely to the internal personnel rules and practices of an agency;

(3) Specifically exempted from mandatory disclosure by statute (other than the Privacy Act or the Government in the Sunshine Act), provided that such statute—

(i) Requires that the matters be withheld from the public in such a manner as to leave not any discretion on the issue, or

(ii) Establishes particular criteria for withholding or refers to particular criteria for withholding or refers to particular types of matters to be withheld;

(4) Trade secrets and commercial or financial information obtained from a person and privileged or confidential;

(5) Inter-agency or intra-agency memorandums or letters that would not be available by law to a party other than an agency in litigation with the agency;

(6) Personnel and medical files and similar files the disclosure of which would constitute a clearly unwarranted invasion of personal privacy;

(7) Records or information compiled for law enforcement purposes, but only to the extent that the production of such law enforcement records or information—

(i) Could reasonably be expected to interfere with enforcement proceedings,

(ii) Would deprive a person of a right to a fair or an impartial adjudication,

(iii) Could reasonably be expected to constitute an unwarranted invasion of personal privacy,

(iv) Could reasonably be expected to disclose the identity of a confidential source, including a State, local, Tribal, or foreign agency or authority or any private institution that furnished information on a confidential basis, and, in the case of a record or information compiled by a criminal law enforcement authority in the course of a criminal investigation, or by an agency conducting a lawful national security intelligence investigation, information furnished by a confidential source,

(v) Would disclose techniques and procedures for law enforcement investigations or prosecutions or would disclose guidelines for law enforcement investigations or prosecutions if such disclosure could reasonably be expected to risk circumvention of the law, or

(vi) Could reasonably be expected to endanger the life or physical safety of any individual;

(8) Contained in or related to examination, operating, or condition reports prepared by, on behalf of, or for the use of an agency responsible for the regulation or supervision of financial institutions; or

(9) Geological and geophysical information and data, including maps, concerning wells.

(d) *Deleted information*. The amount of information deleted from frequently-requested electronic records that are available in a public reading room will be indicated on the released portion of the record, unless doing so would harm an interest protected by the exemption concerned. If technically feasible, the amount of information deleted will be indicated at the place in the record where the deletion is made.

§7.14 Requests for records.

(a) Each person desiring access to or a copy of a record covered by this subpart shall comply with the following provisions:

(1) A written request must be made for the record.

(2) Such request should indicate that it is being made under FOIA.

(3) The envelope in which a mailed request is sent should be prominently marked: ''FOIA.''

(4) The request should be addressed to the appropriate office as set forth in §7.15.

(5) The request should state the format (*e.g.*, paper, microfiche, computer diskette, etc.) in which the information is sought, if the requestor has a preference.

(b) If the requirements of paragraph (a) of this section are not met, treatment of the request will be at the discretion of the agency. The twenty-day limit for responding to requests, described in §7.31, will not start to run until the request has been identified, or would have been identified with the exercise of due diligence, by an employee of DOT as a request pursuant to FOIA

and has been received by the office to which it should have been originally sent.

(c) *Form of requests.* (1) Each request should describe the particular record to the fullest extent possible. The request should describe the subject matter of the record, and, if known, indicate the date when it was made, the place where it was made, and the person or office that made it. If the description does not enable the office handling the request to identify or locate the record sought, that office will notify the requestor and, to the extent possible, indicate the additional data required.

(2) Each request shall—

(i) Specify the fee category (commercial use, news media, educational institution, noncommercial scientific institution, or other) in which the requestor claims the request to fall and the basis of this claim (see subpart F of this part for fees and fee waiver requirements),

(ii) State the maximum amount of fees that the requestor is willing to pay or include a request for a fee waiver, and

(iii) A request seeking a fee waiver shall, to the extent possible, address why the requestor believes that the criteria for fee waivers set out in §7.44(f) are met.

(3) Requesters are advised that the time for responding to requests set forth in subpart E will not begin to run—

(i) If a requestor has not sufficiently identified the fee category applicable to the request,

(ii) If a requestor has not stated a willingness to pay fees as high as anticipated by DOT,

(iii) If a fee waiver request is denied and the requestor has not included an alternative statement of willingness to pay fees as high as anticipated by DOT, or

(iv) If a fee waiver request does not address fee waiver criteria.

(d) *Creation of records.* A request may seek only records that are in existence at the time the request is received. A request may not seek records that come into existence after the date on which it is received and may not require that new records be created in response to the request by, for example, combining or compiling selected items from manual files, preparing a new computer program, or calculating proportions, percentages, frequency distributions, trends, or comparisons. In those instances where DOT determines that creating a new record will be less burdensome than disclosing large volumes of unassembled material, DOT may, in its discretion, agree to creation of a new record as an alternative to disclosing existing records. Records will be provided in the form or format sought by the requestor if the record is readily reproducible in the requested format.

(e) *Search for records.* (1) Each record made available under this subpart will be made available for inspection and copying during regular business hours at the place where it is located, or photocopying may be arranged with the copied materials being mailed to the requestor upon payment of the appropriate fee. Original records ordinarily will be copied except in this instance where, in DOT's judgment, copying would endanger the quality of the original or raise the reasonable possibility of irreparable harm to the record. In these instances, copying of the original would not be in the public interest. In any event, original records will not be released from DOT custody. Original records, regardless of format, may be returned to agency service upon provision of a copy of the record to the requestor, or, in the case of a denial, upon creation and retention of a copy of the original for purposes of FOIA processing.

(2) DOT will make a reasonable effort to search for requested records in electronic form or format, unless doing so would significantly interfere with operation of the affected automated information system.

(f) If a requested record is known not to exist in the files of the agency, or to have been destroyed or otherwise disposed of, the requestor will be so notified.

(g) Fees will be determined in accordance with subpart F of this part.

(h) Notwithstanding paragraphs (a) through (g) of this section, informational material, such as news releases, pamphlets, and other materials of that

nature that are ordinarily made available to the public as a part of any information program of the Government will be available upon oral or written request. A fee will be not be charged for individual copies of that material so long as the material is in supply. In addition DOT will continue to respond, without charge, to routine oral or written inquiries that do not involve the furnishing of records.

§7.15 Contacts for records requested under the FOIA.

Each person desiring a record under this subpart should submit a request in writing (via paper, facsimile, or electronic mail) to the DOT component where the records are located:

(a) FOIA Offices at 400 7th Street, S.W., Washington, DC 20590:

(1) Office of the Secretary of Transportation, Room 5432.

(2) Federal Highway Administration, Room 4428.

(3) National Highway Traffic Safety Administration, Room 5221.

(4) Federal Transit Administration, Room 9400.

(5) Maritime Administration, Room 7221.

(6) Research and Special Programs Administration, Room 8419.

(7) Bureau of Transportation Statistics, Room 3430.

(8) Office of Inspector General, Room 9210.

(b) Federal Aviation Administration, 800 Independence Avenue, S.W., Room 906A, Washington, DC 20591.

(c) United States Coast Guard, 2100 2nd Street, S.W., Room 6106, Washington, DC 20593–0001.

(d) Director, Office of Finance, Saint Lawrence Seaway Development Corporation, 180 Andrews Street, P.O. Box 520, Massena, New York 13662–0520.

(e) Federal Railroad Administration, 1120 Vermont Avenue NW, 7th Floor, Washington, DC. (Mailing address: 400 Seventh St., SW, Washington, DC 20590.)

(f) Certain DOT components also maintain FOIA contacts at regional offices and at the offices of the Commandant and District Commanders of the United States Coast Guard. Additional information on the location of these offices can be obtained through the FOIA contact offices listed in this section.

(g) If the person making the request does not know where in DOT the record is located, he or she may make an inquiry to the Chief, FOIA Division, Office of the General Counsel (voice: 202.366.4542; facsimile: 202.366.8536).

(h) Requests for records under this part, and Freedom of Information Act inquiries generally, may be made by accessing the DOT Home Page on the Internet (www.dot.gov) and clicking on the Freedom of Information Act link (www.dot.gov/foia).

§7.16 Requests for records of concern to more than one government organization.

(a) If the release of a record covered by this subpart would be of concern to both DOT and another Federal agency, the determination as to release will be made by DOT only after consultation with the other interested agency.

(b) If the release of the record covered by this subpart would be of concern to both DOT and a State, local, or Tribal government, a territory or possession of the United States, or a foreign government, the determination as to release will be made by DOT only after consultation with the interested government.

(c) Alternatively, DOT may refer the request (or relevant portion thereof) for decision by a Federal agency that originated or is substantially concerned with the records, but only if that agency is subject to FOIA. Such referrals will be made expeditiously and the requestor notified in writing that a referral has been made.

§7.17 Consultation with submitters of commercial and financial information.

(a) If a request is received for information that has been designated by the submitter as confidential commercial information, or which DOT has some other reason to believe may contain information of the type described in §7.13(c)(4), the submitter of such information will, except as is provided in paragraphs (c) and (d) of this section, be notified expeditiously and asked to submit any written objections to release. At the same time, the requestor

will be notified that notice and an opportunity to comment are being provided to the submitter. The submitter will, to the extent permitted by law, be afforded a reasonable period of time within which to provide a detailed statement of any such objections. The submitter's statement shall specify all grounds for withholding any of the information. The burden shall be on the submitter to identify all information for which exempt treatment is sought and to persuade the agency that the information should not be disclosed.

(b) The responsible DOT component will, to the extent permitted by law, consider carefully a submitter's objections and specific grounds for nondisclosure prior to determining whether to disclose business information. Whenever a decision is made to disclose such information over the objection of a submitter, the office responsible for the decision will forward to the submitter a written notice of intent to disclose that will, to the extent permitted by law, be forwarded to the submitter a reasonable number of days prior to the specified date upon which disclosure is intended. At the same time the submitter is notified, the requestor will be notified of the decision to disclose information. The written notice will include:

(1) A statement of the reasons for which the submitter's disclosure objections were not accepted;

(2) A description of the business information to be disclosed; and

(3) A specific disclosure date.

(c) The notice requirements of this section will not apply if:

(1) The office responsible for the decision determines that the information should not be disclosed;

(2) The information lawfully has been published or otherwise made available to the public; or

(3) Disclosure of the information is required by law (other than 5 U.S.C. 552).

(d) The procedures established in this section will not apply in the case of:

(1) Business information submitted to the National Highway Traffic Safety Administration and addressed in 49 CFR Part 512.

(2) Information contained in a document to be filed or in oral testimony that is sought to be withheld pursuant to Rule 39 of the Rules of Practice in Aviation Economic Proceedings (14 CFR 302.39).

(e) Whenever a requestor brings suit seeking to compel disclosure of confidential commercial information, the responsible DOT component will promptly notify the submitter.

Subpart D—Procedures for Appealing Decisions Not to Disclose Records and/or Waive Fees

§ 7.21 General.

(a) Each officer or employee of DOT who, upon a request by a member of the public for a record under this part, makes a determination that the record is not to be disclosed, either because it is subject to an exemption or not in DOT's custody and control, will give a written statement of the reasons for that determination to the person making the request; and indicate the names and titles or positions of each person responsible for the initial determination not to comply with such request, and the availability of an appeal within DOT. The denial letter will include an estimate of the volume of records or information withheld, in number of pages or in some other reasonable form of estimation. This estimate does not need to be provided if the volume is otherwise indicated through deletions on records disclosed in part, or if providing an estimate would harm an interest protected by an applicable exemption. Records disclosed in part will be marked or annotated to show both the amount and the location of the information deleted whenever practicable.

(b) When a request for a waiver of fees pursuant to § 7.44 has been denied in whole or in part, the requestor may appeal the denial.

(c) Any person to whom a record has not been made available within the time limits established by § 7.31 and any person who has been given a determination pursuant to paragraph (a) of this section that a record will not be disclosed may appeal to the responsible DOT official. Any person who has not received an initial determination on

his or her request within the time limits established by §7.31 can seek immediate judicial review, which may be sought without the need first to submit an administrative appeal. Judicial review may be sought in the United States District Court for the judicial district in which the requestor resides or has his or her principal place of business, the judicial district in which the records are located, or in the District of Columbia. A determination that a record will not be disclosed and/or that a request for a fee waiver or reduction will not be granted does not constitute final agency action for the purposes of judicial review unless:

(1) It was made by the responsible DOT official; or

(2) The applicable time limit has passed without a determination on the initial request or the appeal, as the case may be, having been made.

(d) Each appeal must be made in writing within thirty days from the date of receipt of the original denial and should include the DOT file or reference number assigned to the request and all information and arguments relied upon by the person making the request. (Appeals may be submitted via facsimile and conventional mail, but not via electronic mail.) Such letter should indicate that it is an appeal from a denial of a request made under FOIA. The envelope in which a mailed appeal is sent should be prominently marked: ''FOIA Appeal.'' If these requirements are not met, the twenty-day limit described in §7.32 will not begin to run until the appeal has been identified, or would have been identified with the exercise of due diligence, by a DOT employee as an appeal under FOIA, and has been received by the appropriate office.

(e) Whenever the responsible DOT official determines it necessary, he/she may require the requestor to furnish additional information, or proof of factual allegations, and may order other proceedings appropriate in the circumstances; in any case in which a request or order is made, DOT's time for responding ceases to count while the requestor responds to the request or order. The decision of the responsible DOT official as to the availability of the record or the appropriateness of a fee waiver or reduction constitutes final agency action for the purpose of judicial review.

(f) The decision of the responsible DOT official not to disclose a record under this part or not to grant a request for a fee waiver or reduction is considered to be a denial by the Secretary for the purpose of 5 U.S.C. 552(a)(4)(B).

(g) Any final determination by the head of an DOT component not to disclose a record under this part, or not to grant a request for a fee waiver or reduction, is subject to concurrence by a representative of the General Counsel.

(h) Upon a determination that an appeal will be denied, the requestor will be informed in writing of the reasons for the denial of the request and the names and titles or positions of each person responsible for the determination, and that judicial review of the determination is available in the United States District Court for the judicial district in which the requestor resides or has his or her principal place of business, the judicial district in which the requested records are located, or the District of Columbia.

Subpart E—Time Limits

§7.31 Initial determinations.

An initial determination whether to release a record requested pursuant to subpart C of this part will be made within twenty Federal working days after the request is received by the appropriate office in accordance with §7.14, except that this time limit may be extended by up to ten Federal working days in accordance with §7.33. The person making the request will be notified immediately of such determination. If the determination is to grant the request, the desired record will be made available as promptly as possible. If the determination is to deny the request, the person making the request will be notified in writing, at the same time he or she is notified of such determination, of the reason for the determination, the right of such person to appeal the determination, and the name and title of each person responsible for the initial determination to deny the request.

(a) *In general.* Components ordinarily will respond to requests according to their order of receipt.

(b) *Multitrack processing.* (1) A component may use two or more processing tracks by distinguishing between simple and more complex requests based on the amount of work and/or time needed to process the request, or on the number of pages involved.

(2) A component using multitrack processing may provide requesters in its slower track(s) with an opportunity to limit the scope of their requests in order to qualify for faster processing within the specified limits of the component's faster track(s). A component doing so will contact the requestor either by telephone, letter, facsimile, or electronic mail, whichever is most efficient in each case.

(c) *Expedited processing.* (1) Requests and appeals will be taken out of order and given expedited treatment whenever a compelling need is demonstrated and it is determined that the compelling need involves:

(i) Circumstances in which the lack of expedited treatment could reasonably be expected to pose an imminent threat to the life or physical safety of an individual;

(ii) Requests made by a person primarily engaged in disseminating information, with an urgency to inform the public of actual or alleged Federal Government activity.

(2) A request for expedited processing may be made at the time of the initial request for records or at any later time. For a prompt determination, a request for expedited processing must be received by the proper component. Requests must be submitted to the component that maintains the records requested.

(3) A requestor who seeks expedited processing must submit a statement, certified to be true and correct to the best of that person's knowledge and belief, explaining in detail the basis for requesting expedited processing. For example, a requestor within the category in paragraph (c)(1)(ii) of this section, if not a full-time member of the news media, must establish that he or she is a person whose main professional activity or occupation is information dissemination, though it need not be his or her sole occupation. A requestor within the category in paragraph (c)(1)(ii) of this section also must establish a particular urgency to inform the public about the government activity involved in the request, beyond the public's right to know about government activity generally. The formality of certification may be waived as a matter of discretion.

(4) Within ten calendar days of receipt of a request for expedited processing, the proper component will decide whether to grant it and will notify the requestor of the decision. If a request for expedited treatment is granted, the request will be given priority and will be processed as soon as practicable. If a request for expedited processing is denied, any appeal of that decision will be acted on expeditiously.

§ 7.32 Final determinations.

(a) A determination with respect to any appeal made pursuant to § 7.21 will be made within twenty Federal working days after receipt of such appeal except that this time limit may be extended by up to ten Federal working days in accordance with § 7.33. The person making the request will be notified immediately of such determination pursuant to § 7.21.

(b) *In general.* Components ordinarily will respond to appeals according to their order of receipt.

(c) *Multitrack processing.* (1) A component may use two or more processing tracks by distinguishing between simple and more complex appeals based on the amount of work and/or time needed to process the appeal, or on the number of pages involved.

(2) A component using multitrack processing may provide persons making appeals in its slower track(s) with an opportunity to limit the scope of their appeals in order to qualify for faster processing within the specified limits of the component's faster track(s). A component doing so will contact the person making the appeal either by telephone, letter, facsimile, or electronic mail, whichever is most efficient in each case.

(d) *Expedited processing.* (1) An appeal will be taken out of order and given expedited treatment whenever a compelling need is demonstrated and it is determined that the compelling need involves:

(i) Circumstances in which the lack of expedited treatment could reasonably be expected to pose an imminent threat to the life or physical safety of an individual;

(ii) A request made by a person primarily engaged in disseminating information, with an urgency to inform the public of actual or alleged Federal Government activity.

(2) A request for expedited processing may be made at the time of the appeal or at any later time. For a prompt determination, a request for expedited processing must be received by the proper component, which is the component that is processing the appeal for the records requested.

(3) A requestor who seeks expedited processing must submit a statement, certified to be true and correct to the best of that person's knowledge and belief, explaining in detail the basis for requesting expedited processing. For example, a requestor within the category in §7.31(c)(1)(ii), if not a full-time member of the news media, must establish that he or she is a person whose main professional activity or occupation is information dissemination, though it need not be his or her sole occupation. A requestor within the category in §7.31(c)(1)(ii) also must establish a particular urgency to inform the public about the government activity involved in the request, beyond the public's right to know about government activity generally. The formality of certification may be waived as a matter of discretion. A person who was granted expedited processing under §7.31 need merely certify that the same circumstances apply.

(4) Within ten calendar days of receipt of a request for expedited processing, the proper component will decide whether to grant it and will notify the requestor of the decision. If a request for expedited treatment is granted, the appeal will be given priority and will be processed as soon as practicable. If a request for expedited processing of an appeal is denied, no further administrative recourse is available.

§7.33 Extension.

(a) In unusual circumstances as specified in this section, the time limits prescribed in §7.31 and §7.32 may be extended by written notice to the person making the request setting forth the reasons for such extension and the date on which a determination is expected to be dispatched. Such notice may not specify a date that would result in a cumulative extension of more than 10 Federal working days without providing the requestor an opportunity to modify the request as noted in this section. As used in this paragraph, ''unusual circumstances'' means, but only to the extent reasonably necessary to the proper processing of the particular request:

(1) The need to search for and collect the requested records from field facilities or other establishments that are separate from the office processing the request.

(2) The need to search for, collect, and appropriately examine a voluminous amount of separate and distinct records that are demanded in a single request; or

(3) The need for consultation, which will be conducted with all practicable speed, with any other agency or DOT component having a substantial interest in the determination of the request or among two or more components of the agency having substantial subject-matter interest therein.

(b) Where the extension is for more than 10 working days, the DOT component will provide the requestor with an opportunity either to modify the request so that it may be processed within the time limits or to arrange an alternative time period with the component for processing the request or a modified request.

(c) Where a component reasonably believes that multiple requests submitted by a requestor, or by a group of requesters acting in concert, constitute a single request that would otherwise involve unusual circumstances, and the requests involve clearly related matters, they may be aggregated for the

purposes of fees and processing activities. Multiple requests involving unrelated matters will not be aggregated.

Subpart F—Fees

§ 7.41 General.

(a) This subpart prescribes fees for services performed for the public under subparts B and C of this part by DOT.

(b) All terms defined by FOIA apply to this subpart, and the term ''hourly rate'' means the actual hourly base pay for a civilian employee or, for members of the Coast Guard, the equivalent hourly pay rate computed using a 40-hour week and the member's normal basic pay and allowances.

(c) This subpart applies to all employees of DOT, including those of non-appropriated fund activities of the Coast Guard and the Maritime Administration.

(d) This subpart does not apply to any special study, special statistical compilation, table, or other record requested under 49 U.S.C. 329(c). The fee for the performance of such a service is the actual cost of the work involved in compiling the record. All such fees received by DOT in payment of the cost of such work are deposited in a separate account administered under the direction of the Secretary, and may be used for the ordinary expenses incidental to providing the information.

(e) This subpart does not apply to requests from record subjects for records about themselves in DOT systems of records, which are determined in accordance with the Privacy Act, as implemented by DOT regulations (49 CFR part 10).

§ 7.42 Payment of fees.

(a) The fees prescribed in this subpart may be paid by check, draft, or money order, payable to the DOT component where fees were incurred, for deposit in the General Fund of the Treasury of the United States, *e.g.* DOT/FAA.

(b) Charges may be assessed by DOT for time spent searching for requested records even if the search fails to locate records or the records located are determined to be exempt from disclosure. In addition, if records are requested for commercial use, DOT may assess a fee for time spent reviewing any responsive records located to determine whether they are exempt from disclosure.

(c) When it is estimated that the search charges, review charges, duplication fees, or any combination of fees that could be charged to the requestor will likely exceed US $25, the requestor will be notified of the estimated amount of the fees, unless the requestor has indicated in advance his or her willingness to pay fees as high as those anticipated. In cases where a requestor has been notified that actual or estimated fees may amount to more than US $25, the request will be deemed not to have been received until the requestor has agreed to pay the anticipated total fee. The notice will also inform the requestor how to consult with the appropriate DOT officials with the object of reformulating the request to meet his or her needs at a lower cost.

(d) Payment of fees may be required prior to actual duplication or delivery of any releasable records to a requestor. However, advance payment, *i.e.*, before work is commenced or continued on a request, may not be required unless:

(1) Allowable charges that a requestor may be required to pay are likely to exceed US $250; or

(2) The requestor has failed to pay within 30 days of the billing date fees charged for a previous request to any part of DOT.

(e) When paragraph (d)(1) of this section applies, the requestor will be notified of the likely cost and, where he/she has a history of prompt payment of FOIA fees, requested to furnish satisfactory assurance of full payment of FOIA fees. Where the requestor does not have any history of payment, he or she may be required to make advance payment of any amount up to the full estimated charges.

(f) When paragraph (d)(2) of this section applies, the requestor will be required to demonstrate that the fee has, in fact, been paid or to pay the full amount owed, including any applicable interest, late handling charges, and penalty charges as discussed in paragraphs (g) and (h) of this section. The requestor will also be required to make an advance payment of the full amount of the estimated fee before processing

of a new request or continuation of a pending request is begun.

(g) DOT will assess interest on an unpaid bill starting on the 31st day following the day on which the notice of the amount due is first mailed to the requestor. Interest will accrue from the date of the notice of amount due and will be at the rate prescribed in 31 U.S.C. 3717. Receipt by DOT of a payment for the full amount of the fees owed within 30 calendar days after the date of the initial billing will stay the accrual of interest, even if the payment has not been processed.

(h) If payment of fees charged is not received within 30 calendar days after the date the initial notice of the amount due is first mailed to the requestor, an administrative charge will be assessed by DOT to cover the cost of processing and handling the delinquent claim. In addition, a penalty charge will be applied with respect to any principal amount of a debt that is more than 90 days past due. Where appropriate, other steps permitted by Federal debt collection statutes, including disclosure to consumer reporting agencies and use of collection agencies, will be used by DOT to encourage payment of amounts overdue.

(i) Notwithstanding any other provision of this subpart, when the total amount of fees that could be charged for a particular request (or aggregation of requests) under subpart C of this part, after taking into account all services that must be provided free of, or at a reduced, charge, is less than US $10.00 DOT will not make any charge for fees.

§7.43 Fee schedule.

The rates for manual searching, computer operator/programmer time and time spent reviewing records will be calculated based on the grades and rates established by the Washington-Baltimore Federal White-Collar Pay Schedule or equivalent grades, as follows:

When performed by employees:

GS–1 through GS–8—Hourly rate of GS–5 step 7 plus 16%

GS–9 through GS–14—Hourly rate of GS–12 step 7 plus 16%

GS–15 and above—Hourly rate of GS–15 step 7 plus 16%

(a) The standard fee for a manual search to locate a record requested under subpart C of this part, including making it available for inspection, will be determined by multiplying the searcher's rate as calculated from the chart in this section and the time spent conducting the search.

(b) The standard fee for a computer search for a record requested under subpart C of this part is the actual cost. This includes the cost of operating the central processing unit for the time directly attributable to searching for records responsive to a FOIA request and the operator/programmer's rate as calculated from the chart for costs apportionable to the search.

(c) The standard fee for review of records requested under subpart C of this part is the reviewer's rate as calculated from the chart multiplied by the time he/she spent determining whether the requested records are exempt from mandatory disclosure.

(d) The standard fee for duplication of a record requested under subpart C of this part is determined as follows:

(1) Per copy of each page (not larger than 8.5 x 14 inches) reproduced by photocopy or similar means (includes costs of personnel and equipment)—US $0.10.

(2) Per copy prepared by computer such as tapes or printout—actual costs, including operator time.

(3) Per copy prepared by any other method of duplication—actual direct cost of production.

(e) Depending upon the category of requestor, and the use for which the records are requested, in some cases the fees computed in accordance with the standard fee schedule in paragraph (d) of this section will either be reduced or not charged, as prescribed by other provisions of this subpart.

(f) The following special services not required by FOIA may be made available upon request, at the stated fees: Certified copies of documents, with DOT or DOT component seal (where authorized)—US $4.00; or true copy, without seal—US $2.00.

§ 7.44 Services performed without charge or at a reduced charge.

(a) A fee is not to be charged to any requestor making a request under subpart C of this part for the first two hours of search time unless the records are requested for commercial use. For purposes of this subpart, when a computer search is required two hours of search time will be considered spent when the hourly costs of operating the central processing unit used to perform the search added to the computer operator's salary cost (hourly rate plus 16 percent) equals two hours of the computer operator's salary costs (hourly rate plus 16 percent).

(b) A fee is not to be charged for any time spent searching for a record requested under subpart C if the records are not for commercial use and the requestor is a representative of the news media, an educational institution whose purpose is scholarly research, or a non-commercial scientific institution whose purpose is scientific research.

(c) A fee is not to be charged for duplication of the first 100 pages (standard paper, not larger than 8.5 x 14 inches) of records provided to any requestor in response to a request under Subpart C unless the records are requested for commercial use.

(d) A fee is not to be charged to any requestor under subpart C to determine whether a record is exempt from mandatory disclosure unless the record is requested for commercial use. A review charge may not be charged except with respect to an initial review to determine the applicability of a particular exemption to a particular record or portion of a record. A review charge may not be assessed for review at the administrative appeal level. When records or portions of records withheld in full under an exemption that is subsequently determined not to apply are reviewed again to determine the applicability of other exemptions not previously considered, this is considered an initial review for purposes of assessing a review charge.

(e) Documents will be furnished without charge or at a reduced charge if the official having initial denial authority determines that disclosure of the information is in the public interest because it is likely to contribute significantly to public understanding of the operations or activities of the government and is not primarily in the commercial interest of the requestor.

(f) Factors to be considered by DOT officials authorized to determine whether a waiver or reduction of fees will be granted include:

(1) Whether the subject matter of the requested records concerns the operations or activities of the Federal government;

(2) Whether the disclosure is likely to contribute to an understanding of Federal government operations or activities;

(3) Whether disclosure of the requested information will contribute to the understanding of the public at large, as opposed to the individual understanding of the requestor or a narrow segment of interested persons;

(4) Whether the contribution to public understanding of Federal government operations or activities will be significant;

(5) Whether the requestor has a commercial interest that would be furthered by the requested disclosure; and

(6) Whether the magnitude of any identified commercial interest to the requestor is sufficiently large in comparison with the public interest in disclosure that disclosure is primarily in the commercial interest of the requestor.

(g) Documents will be furnished without charge or at a reduced charge if the official having initial denial authority determines that the request concerns records related to the death of an immediate family member who was, at the time of death, a DOT employee or a member of the Coast Guard.

(h) Documents will be furnished without charge or at a reduced charge if the official having initial denial authority determines that the request is by the victim of a crime who seeks the record of the trial or court-martial at which the requestor testified.

§ 7.45 Transcripts.

Transcripts of hearings or oral arguments are available for inspection. Where transcripts are prepared by a nongovernmental contractor, and the

contract permits DOT to handle the reproduction of further copies, §7.43 applies. Where the contract for transcription services reserves the sales privilege to the reporting service, any duplicate copies must be purchased directly from the reporting service.

§7.46 Alternative sources of information.

In the interest of making documents of general interest publicly available at as low a cost as possible, alternative sources will be arranged whenever possible. In appropriate instances, material that is published and offered for sale may be obtained from the Superintendent of Documents, U.S. Government Printing Office, Washington, DC 20402; U.S. Department of Commerce's National Technical Information Service (NTIS), Springfield, Virginia 22151; or National Audio-Visual Center, National Archives and Records Administration, Capital Heights, MD 20743–3701.

PART 8—CLASSIFIED INFORMATION: CLASSIFICATION/DECLASSIFICATION/ACCESS

Subpart A—General

Sec.
8.1 Scope.
8.3 Applicability.
8.5 Definitions.
8.7 Spheres of responsibility.

Subpart B—Classification/Declassification of Information

8.9 Information Security Review Committee.
8.11 Authority to classify information.
8.13 Authority to downgrade or declassify.
8.15 Mandatory review for classification.
8.17 Classification challenges.
8.19 Procedures for submitting and processing requests for classification reviews.
8.21 Burden of proof.
8.23 Classified information transferred to the Department of Transportation.

Subpart C—Access to Information

8.25 Personnel Security Review Board.
8.27 Public availability of declassified information.
8.29 Access by historical researchers and former Presidential appointees.
8.31 Industrial security.

AUTHORITY: E. O. 10450, 3 CFR, 1949–1953 Comp., p. 936; E. O. 12829, 3 CFR, 1993 Comp., p. 570; E. O. 12958, 3 CFR, 1995 Comp., p. 333; E. O. 12968, 3 CFR, 1995 Comp., p. 391.

SOURCE: 62 FR 23661, May 1, 1997, unless otherwise noted.

Subpart A—General

§8.1 Scope.

This part sets forth procedures for the classification, declassification, and availability of information that must be protected in the interest of national security, in implementation of Executive Order 12958 of April 17, 1995, ''Classified National Security Information;'' and for the review of decisions to revoke, or not to issue, national security information clearances, or to deny access to classified information, under Executive Order 12968 of August 2, 1995, ''Access to National Security Information''.

§8.3 Applicability.

This part applies to all elements of the Department of Transportation.

§8.5 Definitions.

As used in this part:

Classification means the act or process by which information is determined to be classified information.

Classification levels means the following three levels at which information may be classified:

(a) Top secret. Information that requires the highest degree of protection, and the unauthorized disclosure of which could reasonably be expected to cause exceptionally grave damage to the national security that the original classification authority is able to identify or describe.

(b) Secret. Information that requires a substantial degree of protection, and the unauthorized disclosure of which could reasonably be expected to cause serious damage to the national security that the original classification authority is able to identify or describe.

(c) Confidential. Information that requires protection and the unauthorized disclosure of which could reasonably be expected to cause damage to the national security that the original classification authority is able to identify or describe.

Classified information or ''classified national security information'' means

information that has been determined under Executive Order 12958, or any predecessor or successor order, to require protection against unauthorized disclosure, and is marked to indicate its classified status when in documentary form.

Clearance means that an individual is eligible, under the standards of Executive Orders 10450 and 12968 and appropriate DOT regulations, for access to classified information.

Damage to the national security means harm to the national defense or foreign relations of the United States from the unauthorized disclosure of information, to include the sensitivity, value, and utility of that information.

Declassification means the authorized change in the status of information from classified information to unclassified information.

Downgrading means a determination by a declassification authority that information classified and safeguarded at a specific level shall be classified and safeguarded at a lower level.

Information means any knowledge that can be communicated, or documentary material, regardless of its physical form or characteristics, that is owned by, produced by or for, or is under the control of the United States Government. ''Control'' means the authority of the agency that originates information, or its successor in function, to regulate access to the information.

Mandatory declassification review means the review for declassification of classified information in response to a request for declassification that qualifies under Section 3.6 of Executive Order 12958.

Original classification means an initial determination that information requires, in the interest of national security, protection against unauthorized disclosure.

Original classification authority means an individual authorized in writing, either by the President or by agency heads or other officials designated by the President, to classify information in the first instance.

§ 8.7 Spheres of responsibility.

(a) Pursuant to Section 5.6(c) of Executive Order 12958, and to section 6.1 of Executive Order 12968, the Assistant Secretary for Administration is hereby designated as the senior agency official of the Department of Transportation with assigned responsibilities to assure effective compliance with and implementation of Executive Order 12958, Executive Order 12968, Office of Management and Budget Directives, the regulations in this part, and related issuances.

(b) In the discharge of these responsibilities, the Assistant Secretary for Administration will be assisted by the Director of Security and Administrative Management, who, in addition to other actions directed by this part, will evaluate the overall application of and adherence to the security policies and requirements prescribed in this part and who will report his/her findings and recommendations to the Assistant Secretary for Administration, heads of Departmental elements, and, as appropriate, to the Secretary.

(c) Secretarial Officers and heads of Departmental elements will assure that the provisions in this part are effectively administered, that adequate personnel and funding are provided for this purpose, and that corrective actions that may be warranted are taken promptly.

Subpart B—Classification/ Declassification of Information

§ 8.9 Information Security Review Committee.

(a) There is hereby established a Department of Transportation Information Security Review Committee, which will have authority to:

(1) Act on all suggestions and complaints not otherwise resolved with respect to the Department's administration of Executive Order 12958 and implementing directives, including those regarding overclassification, failure to declassify, or delay in declassifying;

(2) Act on appeals of requests for classification reviews, and appeals of requests for records under 5 U.S.C. 552 (Freedom of Information Act) when the initial, and proposed final, denials are based on continued classification of the record; and

(3) Recommend to the Secretary, when necessary, appropriate administrative action to correct abuse or violation of any provision of Executive Order 12598 and implementing directives.

(b) The Information Security Review Committee will be composed of the Assistant Secretary for Administration, who will serve as Chair; the General Counsel; and the Director of Security and Administrative Management. When matters affecting a particular Departmental agency are at issue, the Associate Administrator for Administration for that agency, or the Chief of Staff for the U.S. Coast Guard, as the case may be, will participate as an ad hoc member, together with the Chief Counsel of that agency. Any regular member may designate a representative with full power to serve in his/her place.

(c) In carrying out its responsibilities to review decisions to revoke or not to issue clearances, or to deny access to classified information, the Committee will establish whatever procedures it deems fit.

§8.11 Authority to classify information.

(a) Executive Order 12958 confers upon the Secretary of Transportation the authority to originally classify information as SECRET or CONFIDENTIAL with further authorization to delegate this authority.

(b) The following delegations of authority originally to classify information as ''Secret'' or ''Confidential'', which may not be redelegated, are hereby made:

(1) *Office of the Secretary of Transportation.* The Deputy Secretary; Assistant Secretary for Administration; Director of Intelligence and Security; Director of Security and Administrative Management.

(2) *United States Coast Guard.* Commandant; Chief, Office of Law Enforcement and Defense Operations.

(3) *Federal Aviation Administration.* Administrator; Assistant Administrator for Civil Aviation Security.

(4) *Maritime Administration.* Administrator.

(c) Although the delegations of authority set out in paragraph (b) of this section are expressed in terms of positions, the authority is personal and is invested only in the individual occupying the position. The authority may not be exercised ''by direction of'' a designated official. The formal appointment or assignment of an individual to one of the identified positions or a designation in writing to act in the absence of one of these officials, however, conveys the authority originally to classify information as ''SECRET''.

(d) Previous delegations and redelegations of authority within the Department of Transportation originally to classify information are hereby rescinded.

§8.13 Authority to downgrade or declassify.

Information originally classified by the Department may be specifically downgraded or declassified by either the official authorizing the original classification, if that official is still serving in the same position, the originator's current successor in function, a supervisory official of either, officials delegated declassification authority in writing by the Secretary, or by the Departmental Information Security Review Committee.

§8.15 Mandatory review for classification.

(a) All information classified by the Department of Transportation under Executive Order 12958 or predecessor orders shall be subject to a review for declassification if:

(1) The request for review describes the information with sufficient specificity to enable its location with a reasonable amount of effort; and

(2) The information has not been reviewed for declassification within the prior two years. If the information has been reviewed within the prior two years, or the information is the subject of pending litigation, the requestor will be informed of this fact, and of the Department's decision not to declassify the information and of his/her right to appeal the Department's decision not to declassify the information to the Interagency Security Classification Appeals Panel.

(b) All information reviewed for declassification because of a mandatory review will be declassified if it does not meet the standards for classification in Executive Order 12958. The information will then be released unless withholding is otherwise authorized and warranted under applicable law.

§ 8.17 Classification challenges.

(a) Authorized holders of information classified by the Department of Transportation who, in good faith, believe that its classification status is improper are encouraged and expected to challenge the classification status of the information before the Departmental Information Security Review Committee.

(1) No individual will be subject to retribution for bringing such a challenge; and

(2) Each individual whose challenge is denied will be advised that he/she may appeal to the Interagency Security Classification Appeals Panel established by section 5.4 of Executive Order 12958.

(b) This classification challenge provision is not intended to prevent an authorized holder of information classified by the Department of Transportation from informally questioning the classification status of particular information. Such information inquiries should be encouraged as means to resolve classification concerns and reduce the administrative burden of formal challenges.

§ 8.19 Procedures for submitting and processing requests for classification reviews.

(a) The Director of Security and Administrative Management is hereby designated as the official to whom a member of the public or another department or agency should submit a request for a classification review of classified information produced by or under the primary cognizance of the Department. Elements of the Department that receive a request directly will immediately notify the Director.

(b) If the request for classification review involves material produced by or under the cognizance of the U.S. Coast Guard or the Federal Aviation Administration, the Director will forward the request to the headquarters security staff of the element concerned for action. If the request involves material produced by other Departmental elements, the Director will serve as the office acting on the request.

(c) The office acting on the request will:

(1) Immediately acknowledge receipt of the request and provide a copy of the correspondence to the Director. If a fee for search of records is involved pursuant to 49 CFR Part 7, the requester will be so notified;

(2) Conduct a security review, which will include consultation with the office that produced the material and with source authorities when the classification, or exemption of material from automatic declassification, was based upon determinations by an original classifying authority; and

(3) Assure that the requester is notified of the determination within 30 calendar days or given an explanation as to why further time is necessary, and provide a copy of the notification to the Director.

(d) If the determination reached is that continued classification is required, the notification to the requester will include, whenever possible, a brief statement as to why the requested material cannot be declassified. The notification will also advise the requester of the right to appeal the determination to the Departmental Information Security Review Committee. A requester who wishes to appeal a classification review decision, or who has not been notified of a decision after 60 calendar days, may submit an appeal to the Departmental Information Security Review Committee.

(e) If the determination reached is that continued classification is not required, the information will be declassified and the material remarked accordingly. The office acting on the request will then refer the request to the office originating the material or higher authority to determine if it is otherwise withholdable from public release under the Freedom of Information Act (5 U.S.C. 552) and the Department's implementing regulations (49 CFR Part 7).

(1) If the material is available under the Freedom of Information Act, the

requester will be advised that the material has been declassified and is available. If the request involves the furnishing of copies and a fee is to be collected, the requester will be so advised pursuant to 49 CFR Part 7, Departmental regulations implementing the Freedom of Information Act.

(2) If the material is not available under the Freedom of Information Act, the requester will be advised that the material has been declassified but that the record is unavailable pursuant to the Freedom of Information Act, and that the provisions concerning procedures for reconsidering decisions not to disclose records, contained in 49 CFR Part 7, apply.

(f) Upon receipt of an appeal from a classification review determination based upon continued classification, the Departmental Information Security Review Committee will acknowledge receipt immediately and act on the matter within 30 calendar days. With respect to information originally classified by or under the primary cognizance of the Department, the Committee, acting for the Secretary, has authority to overrule previous determinations in whole or in part when, in its judgment, continued protection in the interest of national security is no longer required. When the classification of the material produced in the Department is based upon a classification determination made by another department or agency, the Committee will immediately consult with its counterpart committee for that department or agency.

(1) If it is determined that the material produced in the Department requires continued classification, the requester will be so notified and advised of the right to appeal the decision to the Interagency Classification Review Committee.

(2) If it is determined that the material no longer requires classification, it will be declassified and remarked. The Committee will refer the request to the General Counsel, or to the head of the Departmental agency concerned, as the case may be, to determine if the material is otherwise withholdable from the public under the Freedom of Information Act (5 U.S.C. 552) and Departmental regulations, (49 CFR Part 7), and paragraphs (f)(1) and (2) of this section will be followed. A copy of the response to the requester will be provided to the Committee.

(g) Requests for a classification review of material more than 25 years old will be referred directly to the Archivist of the United States and the requester will be notified of the referral. In this event, the provisions of this section apply.

(h) Whenever a request is insufficient in the description of the record sought, the requester will be asked to limit his request to records that are reasonably obtainable. If, in spite of these steps, the requester does not describe the records with sufficient particularity, or the record requested cannot be obtained with a reasonable amount of effort, the requester will be notified of the reasons why the request is denied and of his/her right to appeal the determination to the Departmental Information Security Review Committee.

§8.21 Burden of proof.

For the purpose of determinations to be made under §§8.13, 8.15, and 8.17, the burden of proof is on the originating Departmental agency to show that continued classification is warranted.

§8.23 Classified information transferred to the Department of Transportation.

(a) Classified information officially transferred to the Department in conjunction with a transfer of function, and not merely for storage purposes, will be considered to have been originated by the Department.

(b) Classified information in the custody of the Department originated by a department or agency that has ceased to exist and for whom there is no successor agency will be deemed to have been originated by the Department. This information may be declassified or downgraded by the Department after consultation with any other agency that has an interest in the subject matter of the information. Such agency will be allowed 30 calendar days in which to express an objection, if it so desires, before action is taken. A difference of opinion that cannot be resolved will be referred to the Departmental Information Security Review

Committee, which will consult with its counterpart committee for the other agency.

(c) Classified information transferred to the National Archives and Records Administration (NARA) will be declassified or downgraded by the Archivist of the United States in accordance with Executive Order 12958, Departmental classification guides, and any existing procedural agreement between NARA and the Department. The Department will take all reasonable steps to declassify information contained in records determined to have permanent historical value before they are accessioned in NARA.

(d) To the extent practicable, the Department will adopt a system of records management that will facilitate the public release of documents at the time such documents are declassified under the provisions of this part for automatic declassification. To the maximum extent possible without destroying the integrity of the Department's files, all such material will be segregated or set aside for public release upon request. The Department will cooperate with the Archivist in efforts to establish a Government-wide database of information that has been declassified.

Subpart C—Access to Information

§ 8.25 Personnel Security Review Board.

(a) There is hereby established a Department of Transportation Personnel Security Review Board, which will, on behalf of the Secretary of Transportation (except in any case in which the Secretary personally makes the decision), make the administratively final decision on an appeal arising in any part of the Department from:

(1) A decision not to grant access to classified information;

(2) A decision to revoke access to classified information; or

(3) A decision under § 8.29 to deny access to classified information.

(b) The Personnel Security Review Board will be composed of:

(1) Two persons appointed by the Assistant Secretary for Administration: one from the Office of Personnel and Training, and one, familiar with personnel security adjudication, from the Office of Security and Administrative Management, who will serve as Chair;

(2) One person appointed by the General Counsel, who, in addition to serving as a member of the Board, will provide to the Board whatever legal services it may require; and

(3) One person appointed by each of the Commandant of the Coast Guard and the Federal Aviation Administrator.

(4) Any member may designate a representative, meeting the same criteria as the member, with full power to serve in his/her place.

(c) In carrying out its responsibilities to review final decisions to revoke or deny access to classified information, the Board will establish whatever procedures it deems fit.

§ 8.27 Public availability of declassified information.

(a) It is a fundamental policy of the Department to make information available to the public to the maximum extent permitted by law. Information that is declassified for any reason loses its status as material protected in the interest of national security. Accordingly, declassified information will be handled in every respect on the same basis as all other unclassified information. Declassified information is subject to the Departmental public information policies and procedures, with particular reference to the Freedom of Information Act (5 U.S.C. 552) and implementing Departmental regulations (49 CFR Part 7).

(b) In furtherance of this policy, all classified material produced after June 1, 1972 that is of sufficient historical or other value to warrant preservation as permanent records in accordance with appropriate records administrative standards, and that becomes declassified, will be systematically reviewed prior to the end of each calendar year for the purpose of making the material publicly available. To the maximum extent possible without destroying the integrity of the Department's files, all such material will be segregated or set aside for public release upon request.

§8.29 Access by historical researchers and former Presidential appointees.

(a) *Historical researchers.* (1) Persons outside the executive branch who are engaged in historical research projects may have access to classified information provided that:

(i) Access to the information is clearly consistent with the interests of national security; and

(ii) The person to be granted access is trustworthy.

(2) The provisions of this paragraph apply only to persons who are conducting historical research as private individuals or under private sponsorship and do not apply to research conducted under Government contract or sponsorship. The provisions are applicable only to situations where the classified information concerned, or any part of it, was originated by the Department or its contractors, or where the information, if originated elsewhere, is in the sole custody of the Department. Any person requesting access to material originated in another agency or to information under the exclusive jurisdiction of the National Archives and Records Administration (NARA) will be referred to the other agency or to NARA, as appropriate.

(3) When a request for access to classified information for historical research is received, it will be referred to the appropriate local security office. That office will obtain from the applicant completed Standard Form 86, Questionnaire for National Security Positions, in triplicate, and Standard Form 87, Fingerprint Chart; a statement in detail to justify access, including identification of the kind of information desired and the organization or organizations, if any, sponsoring the research; and a written statement (signed, dated, and witnessed) with respect to the following:

(i) That the applicant will abide by regulations of the Department:

(A) To safeguard classified information; and

(B) To protect information that has been determined to be proprietary or privileged and is therefore not eligible for public dissemination.

(ii) That the applicant understands that any classified information that the applicant receives affects the security of the United States.

(iii) That the applicant acknowledges an obligation to safeguard classified information or privileged information of which the applicant gains possession or knowledge as a result of the applicant's access to files of the Department.

(iv) That the applicant agrees not to reveal to any person or agency any classified information or privileged information obtained as a result of the applicant's access except as specifically authorized in writing by the Department, and further agrees that the applicant shall not use the information for purposes other than those set forth in the applicant's application.

(v) That the applicant agrees to authorize a review of the applicant's notes and manuscript for the sole purpose of determining that no classified information or material is contained therein.

(vi) That the applicant understands that failure to abide by conditions of this statement will constitute sufficient cause for canceling the applicant's access to classified information and for denying the applicant any future access, and may subject the applicant to criminal provisions of Federal law as referred to in this statement.

(vii) That the applicant is aware and fully understands that title 18, United States Code, Crimes and Criminal Procedures, and the Internal Security Act of 1950, as amended, title 50, United States Code, prescribe, under certain circumstances, criminal penalties for the unauthorized disclosure of information respecting the national security, and for loss, destruction, or compromise of such information.

(viii) That this statement is made to the U.S. Government to enable it to exercise its responsibilities for the protection of information affecting the national security.

(ix) That the applicant understands that any material false statement that the applicant makes knowingly and willfully will subject the applicant to the penalties of 18 U.S.C. 1001.

(4) The security office will process the forms in the same manner as specified for a preappointment national agency check for a critical-sensitive position. Upon receipt of the completed

national agency check, the security office, if warranted, may determine that access by the applicant to the information will be clearly consistent with the interests of national security and the person to be granted access is trustworthy. If deemed necessary, before making its determination, the office may conduct or request further investigation. Before access is denied in any case, the matter will be referred through channels to the Director of Security and Administrative Management for review and submission to the Personnel Security Review Board for final review.

(5) If access to TOP SECRET or intelligence or communications security information is involved a special background investigation is required. However, this investigation will not be requested until the matter has been referred through channels to the Director of Security and Administrative Management for determination as to adequacy of the justification and the consent of other agencies as required.

(6) When it is indicated that an applicant's research may extend to material originating in the records of another agency, approval must be obtained from the other agency prior to the grant of access.

(7) Approvals for access will be valid for the duration of the current research project but no longer than 2 years from the date of issuance, unless renewed. If a subsequent request for similar access is made by the individual within one year from the date of completion of the current project, access may again be granted without obtaining a new National Agency Check. If more than one year has elapsed, a new National Agency Check must be obtained. The local security office will promptly advise its headquarters security staff of all approvals of access granted under the provisions of this section.

(8) An applicant may be given access only to that classified information that is directly pertinent to the applicant's approved project. The applicant may review files or records containing classified information only in offices under the control of the Department. Procedures must be established to identify classified material to which the applicant is given access. The applicant must be briefed on local procedures established to prevent unauthorized access to the classified material while in the applicant's custody, for the return of the material for secure storage at the end of the daily working period, and for the control of the applicant's notes until they have been reviewed. In addition to the security review of the applicant's manuscript, the manuscript must be reviewed by appropriate offices to assure that it is technically accurate insofar as material obtained from the Department is concerned, and is consistent with the Department's public release policies.

(b) *Former Presidential appointees.* Persons who previously occupied policy-making positions to which they were appointed by the President may be granted access to classified information or material that they originated, reviewed, signed, or received, while in public office, provided that:

(1) It is determined that such access is clearly consistent with the interests of national security; and

(2) The person agrees to safeguard the information, to authorize a review of the person's notes to assure that classified information is not contained therein, and that the classified information will not be further disseminated or published.

§ 8.31 Industrial security.

(a) *Background.* The National Industrial Security Program was established by Executive Order 12829 of January 6, 1993 for the protection of information classified pursuant to Executive Order 12356 of April 2, 1982, National Security Information, or its predecessor or successor orders, and the Atomic Energy Act of 1954, as amended. The Secretary of Defense serves as the Executive Agent for inspecting and monitoring contractors, licensees, grantees, and certificate holders that require or will require access to, or that store or will store, classified information, and for determining the eligibility for access to classified information of contractors, licensees, certificate holders, and grantees, and their respective employees.

(b) *Implementing regulations.* The Secretary of Transportation has entered

into agreement for the Secretary of Defense to render industrial security services for the Department of Transportation. Regulations prescribed by the Secretary of Defense to fulfill the provisions of Executive Order 12829 have been extended to protect release of classified information for which the Secretary of Transportation is responsible. Specifically, this regulation is DOD 5220.22–M, National Industrial Security Program Operating Manual. This regulation is effective within the Department of Transportation, which functions as a User Agency as prescribed in the regulation. Appropriate security staffs, project personnel, and contracting officers assure that actions required by the regulation are taken.

PART 9—TESTIMONY OF EMPLOYEES OF THE DEPARTMENT AND PRODUCTION OF RECORDS IN LEGAL PROCEEDINGS

Sec.

9.1 Purpose.
9.2 Applicability.
9.3 Definitions.
9.5 General prohibition of production or disclosure in legal proceedings.
9.7 Testimony by employees before the Department or in other legal proceedings in which the United States is a party.
9.9 Legal proceedings between private litigants: General rules.
9.11 Legal proceedings between private litigants: Demands.
9.13 Legal proceedings between private litigants: Procedures to request records.
9.15 Legal proceedings between private litigants: Procedures to request testimony.
9.17 Legal proceedings between private litigants: Procedures for taking testimony.
9.19 Acceptance of service on behalf of Secretary.

AUTHORITY: 5 U.S.C. 301; 45 U.S.C. 41–42; 49 U.S.C. 322; 49 U.S.C. 504(f); 23 U.S.C. 409.

SOURCE: 58 FR 6724, Feb. 2, 1993, unless otherwise noted.

§9.1 Purpose.

(a) This part sets forth procedures governing the testimony of an employee in legal proceedings in which the United States is a party. It also sets forth procedures to be followed when an employee is issued a subpoena, order or other demand (collectively referred to in this part as a ''demand'') by a court or other competent authority, or is requested by a private litigant, to provide testimony or produce records concerning information acquired in the course of performing official duties or because of the employee's official status. It also prescribes the policies and procedures of the Department with respect to the acceptance of service of legal process and pleadings in legal proceedings involving the Department.

(b) The purposes of this part are to:

(1) Conserve the time of employees for conducting official business;

(2) Minimize the possibility of involving the Department in controversial issues not related to its mission;

(3) Maintain the impartiality of the Department among private litigants;

(4) Avoid spending the time and money of the United States for private purposes; and

(5) To protect confidential, sensitive information and the deliberative processes of the Department.

(c) Agency counsel, in his or her discretion, may permit an exception from any requirement in this part. The exception may be granted only when the deviation will not interfere with matters of operational or military necessity, and when agency counsel determines that:

(1) It is necessary to prevent a miscarriage of justice;

(2) The Department has an interest in the decision that may be rendered in the legal proceeding; or

(3) The exception is in the best interest of the Department or the United States.

For Office of Inspector General employees and documents, the Inspector General, in conjunction with the General Counsel of the Department, may permit an exception from any requirement of this part if the Inspector General determines, based on the Inspector General Act of 1978, as amended, that application of the requirement would be inappropriate.

§9.2 Applicability.

This part applies to the testimony of an employee in legal proceedings in which the United States is a party. It also applies in legal proceedings between private litigants to requests or

demands for testimony or records concerning information acquired in the course of an employee performing official duties or because of the employee's official status. This part does not apply to any legal proceeding in which an employee is to testify as to facts or events that are in no way related to the employee's official duties or the functions of the Department. Nor does it apply to Congressional demands for testimony or documents.

§ 9.3 Definitions.

For purposes of this part:

Department means the Department of Transportation (DOT), including the Office of the Secretary (which encompasses the Office of the Inspector General) and the following operating administrations while they are part of DOT:

(a) The U.S. Coast Guard.

(b) The Federal Aviation Administration.

(c) The Federal Highway Administration.

(d) The Federal Railroad Administration.

(e) The Federal Transit Administration.

(f) The St. Lawrence Seaway Development Corporation.

(g) The National Highway Traffic Safety Administration.

(h) The Maritime Administration.

(i) The Research and Special Programs Administration.

(j) Any DOT operating administration established after the effective date of this part.

Legal proceeding means any case or controversy pending before any federal, state, or local court (including grand jury proceedings), any administrative proceeding pending before any federal, state, or local agency, or any legislative proceeding pending before any state or local agency.

Legal proceeding between private litigants means any legal proceeding in which neither the Department of Transportation nor the United States (including any federal agency or officer of the United States in his or her official capacity) is a party.

Employee of the Department or *Employee* means any current or former officer or employee of the Department; any active duty, retired, or former officer or enlisted member of the Coast Guard; or any current or former contractor (including any corporation or other entity and any employee or subcontractor).

Agency counsel means the General Counsel of the Department or the Chief Counsel of any operating administration of the Department concerned, any person to whom the General Counsel or Chief Counsel has delegated authority, or any person who is authorized to represent the Department in a specific legal proceeding.

Testimony means any written or oral statement by a witness, including depositions, answers to interrogatories, affidavits, declarations, and statements at a hearing or trial.

§ 9.5 General prohibition of production or disclosure in legal proceedings.

No employee of the Department may provide testimony or produce any material contained in the files of the Department, or disclose any information relating to, or based upon, material contained in the files of the Department, or disclose any information or produce any material acquired as part of the performance of that employee's official duties or because of that employee's official status unless authorized in accordance with this part, or by other applicable law.

§ 9.7 Testimony by employees before the Department or in other legal proceedings in which the United States is a party.

In any legal proceeding before the Department or in which the United States (including any federal agency or officer of the United States) is a party:

(a) Agency counsel shall arrange for an employee to testify as a witness for the United States whenever the attorney representing the United States requests it.

(b) An employee may testify for the United States both as to facts within the employee's personal knowledge and as an expert or opinion witness. Except as provided in paragraph (c) of this section, an employee may not testify as an expert or opinion witness, with regard to any matter arising out of the

employee's official duties or the functions of the Department, for any party other than the United States in any legal proceeding in which the United States is a party. An employee who receives a demand to testify on behalf of a party other than the United States may testify as to facts within the employee's personal knowledge, provided that the testimony be subject to the prior approval of agency counsel and to the Federal Rules of Civil Procedure and any applicable claims of privilege.

(c) An employee may testify as an expert or opinion witness on behalf of an officer or enlisted member of the Coast Guard in any legal proceeding conducted by the Coast Guard.

§9.9 Legal proceedings between private litigants: General rules.

In legal proceedings between private litigants:

(a) The proper method for obtaining testimony or records from an employee is to submit a request to agency counsel as provided in §§9.13 and 9.15 of this part, not to serve a demand on the employee. Whenever, in a legal proceeding between private litigants, an employee is served with a demand, or receives a request, to testify in that employee's official capacity or produce records, the employee shall immediately notify agency counsel.

(b) If authorized to testify pursuant to these rules, an employee may testify only as to facts within that employee's personal knowledge with regard to matters arising out of his or her official duties.

(1) When the proceeding arises from an accident, an employee may testify only as to personally known facts, not reasonably available from other sources, observed by the employee or uncovered during the employee's investigation of the accident or observed by the employee even if he or she did not investigate the accident. The employee shall decline to testify regarding facts beyond the scope of his or her official duties.

(2) The employee shall not testify to facts that are contained in a report, or any part of a report, unless the employee has obtained permission from agency counsel to disclose the information.

(3) The employee shall not disclose confidential or privileged information unless the employee has obtained permission from agency counsel to disclose the information.

(4) The employee shall not testify as to facts when agency counsel determines that the testimony would not be in the best interest of the Department or the United States if disclosed.

(c) An employee shall not testify as an expert or opinion witness with regard to any matter arising out of the employee's official duties or the functions of the Department. An employee who is asked questions that call for expert or opinion testimony shall decline to answer on the grounds that it is forbidden by this part. Agency counsel shall advise the employee on how to proceed if the presiding officer directs the employee to provide expert or opinion testimony.

(d) An employee shall not provide testimony at a trial or hearing. An employee's testimony shall be limited to a single deposition, affidavit, or set of interrogatories, concerning the circumstances (e.g. an accident) from which the proceeding arose. Where multiple legal proceedings concerning those circumstances are pending, or can occur, it shall be the duty of the private litigant seeking the testimony to ascertain, to the extent feasible, the identities of all parties, or potential parties, to those proceedings and notify them that a deposition has been granted and that they have the opportunity to participate. The private litigant shall submit an affidavit or certification describing the extent of the search for parties and potential parties and listing the names of the parties and potential parties notified.

(e) Where an employee has already provided testimony, any party wishing to obtain further testimony from that employee concerning the same matter or occurrence, whether in the same or a different private legal proceeding, may submit a request to agency counsel to waive the restrictions of paragraph (d) of this section. The request shall, in addition to meeting the requirements of §9.15 of this part, state why the requester should be permitted to gather additional information despite not having previously requested

the information when it had an opportunity to do so, and why the additional testimony is now required and the prior testimony or previously supplied documents are insufficient.

§ 9.11 Legal proceedings between private litigants: Demands.

(a) If an employee receives a demand that has not been validly issued or served, agency counsel may instruct the employee not to comply with the demand.

(b) If an employee receives a demand (validly issued and served) to testify or produce records, agency counsel, in his or her discretion, may grant the employee permission to testify or produce records only if the purposes of this part are met or agency counsel determines that an exception is appropriate.

(c) If a demand is issued to an employee, agency counsel shall contact the requester of the demand, inform that person of the requirements of this part, and may, in agency counsel's discretion, ask that the demand be withdrawn.

(d) If the requester of the demand refuses to have it withdrawn or fails to comply with this part, the Department may seek to quash the demand.

(e) If the court or other competent authority declines to grant the Department's motion to quash, agency counsel shall instruct the employee whether to testify or produce documents pursuant to the demand. Agency counsel may permit the testimony under § 9.1(c) of this part. If response to a demand is required before the court or other competent authority rules on the motion to quash and the court fails to stay the demand, the employee must appear at the stated time and place, produce a copy of this part, and respectfully refuse to provide any testimony or produce any documents. Agency counsel shall take steps to arrange for legal representation for the employee. Agency counsel shall advise the employee how to respond, including not to testify, if the court or other competent authority rules that the demand must be complied with irrespective of these regulations.

§ 9.13 Legal proceedings between private litigants: Procedures to request records.

(a) In a legal proceeding between private litigants, a party who wishes to obtain records from the Department shall submit to agency counsel a request for the records. The request will ordinarily be handled in accordance with the Department's procedures concerning requests for records found at 49 CFR part 7. If the party does not follow the procedures specified in that part, the request must be accompanied by a statement setting forth the relevance of the records to the proceeding. The request should be resolved before any request for testimony under § 9.15 is submitted. Where a request for testimony includes a request for additional records, it shall indicate precisely how this new request differs in scope from any previous request in order to avoid agency duplication of effort. Agency counsel shall notify the requester of the approval or denial of the request.

(b) [Reserved]

§ 9.15 Legal proceedings between private litigants: Procedures to request testimony.

(a) Any party seeking the testimony of an employee in a legal proceeding between private litigants, concerning facts within the employee's personal knowledge with regard to matters arising out of the employee's official duties, shall, rather than serving a demand for the testimony, request the testimony at least 30 days before it is intended to be taken or received. The request must be submitted to agency counsel and must include:

(1) The title of the case, docket number, and the court, or otherwise clearly identify the legal proceeding involved;

(2) A statement setting forth the basic facts in the proceeding, such as the type, date, and location of an accident;

(3) A summary of the unresolved issues applicable to the testimony sought;

(4) A summary of the testimony sought and its relevant to the proceeding;

(5) A certification with support, that the information desired is not reasonably available from other sources, including Departmental documents;

(6) Pursuant to §9.9(d) of this part, an affidavit or certification describing the extent of a search of parties and potential parties and listing the names of the parties and potential parties notified; and

(7) A declaration that the party will not seek expert or opinion testimony from the witness or seek the testimony of the witness at a hearing or trial in the proceeding.

The request shall specify which form of testimony (deposition, affidavit, declaration, or answers to interrogatories) is desired and the date by which it is desired; however, only one form, the one least burdensome to the Department that will provide the needed information, will be permitted for each witness.

(b) The party seeking the testimony shall include with its request for testimony a copy of any prior request(s) made by the same requester to the Department or other agency of the United States for records pertaining to the matter being litigated and of the response (not including the records themselves) to the request(s). The party seeking the testimony shall also comply with any agency counsel request that copies of the records previously disclosed by the Department, or a list of those records, be furnished.

(c) In accordance with the requirement of this section and the general provisions of this part, agency counsel shall notify the requester of the approval or denial of the request. Agency counsel may attach special conditions to its approval.

§9.17 Legal proceedings between private litigants: Procedures for taking testimony.

(a) Testimony of an employee of the Department may be taken only at the office to which the employee is assigned, or any other place designated by agency counsel. Additional conditions may be specified under §9.15(c) of this part. The time shall be reasonably fixed to avoid substantial interference with the performance of the employee's or agency counsel's official duties.

(b) Upon completion of the testimony of an employee of the Department, a copy of the transcript of the testimony shall be furnished, at the expense of the party requesting the testimony, to agency counsel for the Department's files.

§9.19 Acceptance of service on behalf of Secretary.

In any legal proceeding, at the option of the server, process or pleadings may be served on agency counsel, with the same effect as if served upon the Secretary or the head of the operating administration concerned, as the case may be. The official accepting service under this section shall acknowledge the service and take appropriate action. This section does not in any way abrogate or modify the requirements of Rule 4(d)(4) and 4(d)(5) of the Federal Rules of Civil Procedure regarding service of summons and complaint.

PART 10—MAINTENANCE OF AND ACCESS TO RECORDS PERTAINING TO INDIVIDUALS

Subpart A—Applicability and Policy

Sec.
10.1 Applicability.
10.3 Policy.
10.5 Definitions.

Subpart B—General

10.11 Administration of part.
10.13 Privacy Act Officer.
10.15 Protection of records.

Subpart C—Maintenance of Records

10.21 General.
10.23 Accounting of disclosures.
10.25 Mailing lists.
10.27 Government contractors.
10.29 Social Security numbers.

Subpart D—Availability of Records

10.31 Requests for records.
10.33 Acknowledgment and access.
10.35 Conditions of disclosure.
10.37 Identification of individual making request.
10.39 Location of records.

Subpart E—Correction of Records

10.41 Requests for correction of records.
10.43 Time limits.
10.45 Statement of disagreement.

Subpart F—Procedures for Reconsidering Decisions not to Grant Access to or Amend Records

10.51 General.

Subpart G—Exemptions

10.61 General exemptions.
10.63 Specific exemptions.

Subpart H—Fees

10.71 General.
10.73 Payment of fees.
10.75 Fee schedule.
10.77 Services performed without charge.

Subpart I—Criminal Penalties

10.81 Improper disclosure.
10.83 Improper maintenance of records.
10.85 Wrongfully obtaining records.

APPENDIX TO PART 10—EXEMPTIONS

AUTHORITY: 5 U.S.C. 552a; 49 U.S.C. 322.

SOURCE: 45 FR 8993, Feb. 11, 1980, unless otherwise noted.

Subpart A—Applicability and Policy

§ 10.1 Applicability.

This part implements section 552a of title 5, United States Code, as well as other provisions of the Privacy Act of 1974, and prescribes rules governing the availability of those records of the Department of Transportation which relate to citizens of the United States and aliens lawfully admitted for permanent residence.

[45 FR 8993, Feb. 11, 1980, as amended at 62 FR 23666, May 1, 1997]

§ 10.3 Policy.

It is the policy of the Department of Transportation to comply with the letter and the spirit of the Privacy Act (the Act). Therefore, personal data contained in each system of records is afforded adequate protection against unauthorized access, is as accurate as is feasible, and is limited to that necessary to accomplish the stated use or uses of the system. Further, no system of records is exempted from the requirements of the Act unless it is determined that to do so is in the best interest of the government with due concern for individual rights.

§ 10.5 Definitions.

Unless the context requires otherwise, the following definitions apply in this part:

Administrator means the head of an operating administration and includes the Commandant of the Coast Guard.

Department means the Department of Transportation, including the Office of the Secretary, the Office of Inspector General, and the following operating administrations: This definition specifically excludes the Surface Transportation Board, which has its own Privacy Act regulations (49 CFR Part 1007), except to the extent that any system of records notice provides otherwise.

(a) The United States Coast Guard.

(b) The Federal Aviation Administration.

(c) The Federal Highway Administration.

(d) The Federal Railroad Administration.

(e) The National Highway Traffic Safety Administration.

(f) Federal Transit Administration.

(g) The St. Lawrence Seaway Development Corporation.

(h) The Research and Special Programs Administration.

(i) Bureau of Transportation Statistics.

General Counsel means the General Counsel of the Department.

Includes means ''includes but is not limited to;''

Individual means a citizen of the United States or an alien lawfully admitted;

Maintain includes maintain, collect, use, or disseminate;

May is used in a permissive sense to state authority or permission to do the act prescribed;

Record means any item, collection, or grouping of information about an individual that is maintained by the Department including, but not limited to, education, financial transactions, medical history, and criminal or employment history and that contains the name of, or an identifying number, symbol, or other identifying particular assigned to, the individual, such as a finger or voice print or a photograph;

Secretary means the Secretary of Transportation or any person to whom

has been delegated authority in the matter concerned;

System of records means a group of any records under the control of the Department from which information is retrieved by the name of the individual or by some identifying number, symbol, or other identifying particular assigned to the individual;

Statistical record means a record in a system of records maintained for statistical research or reporting purposes only and not in whole or in part in making any determination about an identifiable individual, except as provided by section 8 of title 13, United States Code; and

Routine use means, with respect to the disclosure of a record, the use of such record for a purpose which is compatible with the purpose for which it was collected.

[45 FR 8993, Feb. 11, 1980, as amended at 62 FR 23667, May 1, 1997]

Subpart B—General

§ 10.11 Administration of part.

Authority to administer this part in connection with the records of the Office of the Secretary is delegated to the Assistant Secretary for Administration. Authority to administer this part in connection with records in each operating administration is delegated to the Administrator concerned. An Administrator may redelegate to officers of that administration the authority to administer this part in connection with defined systems of records. An Administrator, however, may redelegate his or her duties under subparts F and G of this part only to his or her deputy and to not more than one other officer who reports directly to the Administrator and who is located at the headquarters of that administration or at the same location as the majority of that administration's systems of records.

[45 FR 8993, Feb. 11, 1980, as amended at 62 FR 23667, May 1, 1997]

§ 10.13 Privacy Act Officer.

(a) To assist with implementation, evaluation, and administration issues, the Chief Information Officer appoints a principal coordinating official with the title Privacy Act Officer, and one Privacy Act Coordinator from his/her staff.

(b) Inquiries concerning Privacy Act matters, or requests for assistance, may be addressed to the Privacy Act Officer (S–80), Department of Transportation, 400 Seventh Street, S.W., Washington, DC 20590.

(c) Administrators may designate Privacy Act Officers or Coordinators to act as central coordinators within their administrations to assist them in administering the Act.

[45 FR 8993, Feb. 11, 1980, as amended by Amdt. 1–290, 62 FR 51804, Oct. 3, 1997]

§ 10.15 Protection of records.

(a) No person may, without permission, remove any record made available for inspection or copying under this part from the place where it is made available. In addition, no person may steal, alter, mutilate, obliterate, or destroy, in whole or in part, such a record.

(b) Section 641 of title 18 of the United States Code provides, in pertinent part, as follows:

> Whoever * * * steals, purloins, or knowingly converts to his use or the use of another, or without authority, sells, conveys or disposes of any record * * * or thing of value of the United States or of any department or agency thereof * * * shall be fined not more than $10,000 or imprisoned not more than 10 years or both; but if the value of such property does not exceed the sum of $100, he shall be fined not more than $1,000 or imprisoned not more than one year or both * * *.

(c) Section 2071 of title 18 of the United States Code provides, in pertinent part, as follows:

> Whoever willfully and unlawfully conceals, removes, mutilates, obliterates, or destroys, or attempts to do so, or with intent to do so takes and carries away any record, proceeding, map, book, paper, document, or other thing, filed or deposited * * * in any public office, or with any * * * public officer of the United States, shall be fined not more than $2,000 or imprisoned not more than 3 years, or both.

Subpart C—Maintenance of Records

§ 10.21 General.

Except to the extent that a system of records is exempt in accordance with

subpart G of this part, the Department, with respect to each system of records:

(a) Maintains in its records only such information about an individual as is relevant and necessary to accomplish a purpose of the Department required to be accomplished by statute or by executive order of the President;

(b) Collects information to the greatest extent practicable directly from the subject individual when the information may result in adverse determinations about an individual's rights, benefits, or privileges under Federal programs;

(c) Informs each individual whom it asks to supply information, on the form which it uses to collect the information or on a separate form that can be retained by the individual of:

(1) The authority (whether granted by statute, or by executive order of the President) which authorizes the solicitation of the information and whether disclosure of such information is mandatory or voluntary;

(2) The principal purpose or purposes for which the information is intended to be used;

(3) The routine uses, as published pursuant to paragraph (d)(4) of this section, which may be made of the information; and

(4) The effects, if any, on the individual of not providing all or any part of the requested information;

(d) Publishes in the FEDERAL REGISTER at least annually a notice of the existence and character of the system of records, including:

(1) The name and location of the system;

(2) The categories of individuals on whom records are maintained in the system;

(3) The categories of records maintained in the system;

(4) Each routine use of the records contained in the system, including the categories of users and the purpose of such use;

(5) The policies and practices regarding storage, retrievability, access controls, retention, and disposal of the records;

(6) The title and business address of the official responsible for the system of records;

(7) The procedures whereby an individual can be notified upon request if the system of records contains a record pertaining to that individual;

(8) The procedures whereby an individual can be notified upon request how to gain access to any record pertaining to that individual contained in the system of records, and how to contest its content; and

(9) The categories of sources of records in the system;

(e) Maintains all records which are used in making any determination about any individual with such accuracy, relevancy, timeliness, and completeness as is reasonably necessary to assure fairness to the individual in the determination;

(f) Prior to disseminating any record about an individual to any person other than an agency, unless the dissemination is made pursuant to § 10.35(a)(2), makes reasonable efforts to assure that such records are accurate, complete, timely, and relevant for the Department's purposes;

(g) Maintains no record describing how any individual exercises rights guaranteed by the First Amendment unless:

(1) Expressly authorized by the General Counsel; and

(2) Expressly authorized by statute or by the individual about whom the record is maintained or unless pertinent to and within the scope of an authorized law enforcement activity;

(h) Makes reasonable efforts to serve notice on an individual when any record on such individual is made available to any person under compulsory legal process when such process becomes a matter of public record.

§ 10.23 Accounting of disclosures.

Each operating administration, the Office of Inspector General, and the Office of the Secretary, with respect to each system of records under its control:

(a) Except for disclosures made under § 10.35(a) (1) or (2) of this part, keep an accurate accounting of:

(1) The date, nature, and purpose of each disclosure of a record to any person or to another agency made under § 10.33; and

(2) The name and address of the person or agency to whom the disclosure is made;

(b) Retains the accounting made under paragraph (a) of this section for at least five years or the life of the record, whichever is longer, after the disclosure for which the accounting is made;

(c) Except for disclosures made under § 10.33(a)(7) of this part, makes the accounting made under paragraph (a)(1) of this section available to the individual named in the record at his request; and

(d) Informs any person or other agency about any correction or notation of dispute made by the agency in accordance with § 10.45 of any record that has been disclosed to the person or agency if an accounting of the disclosure was made.

[45 FR 8993, Feb. 11, 1980, as amended at 62 FR 23667, May 1, 1997]

§ 10.25 Mailing lists.

An individual's name and address is not sold or rented unless such action is specifically authorized by law. This provision shall not be construed to require the withholding of names and addresses otherwise permitted to be made public.

§ 10.27 Government contractors.

When the Department provides by a contract for the operation by or on behalf of the Department of a system of records to accomplish a function of the Department, the requirements of this part are applied to such system. For purposes of subpart I, Criminal Penalties, any such contractor and any employee of the contractor are considered, in accordance with section 3(m) of the Privacy Act, to be employees of the Department.

§ 10.29 Social Security numbers.

(a) No individual is denied any right, benefit, or privilege provided by law because of such individual's refusal to disclose his Social Security account number.

(b) The provisions of paragraph (a) of this section do not apply to:

(1) Any disclosure which is required by Federal statute; or

(2) The disclosure of a Social Security number when such disclosure was required under statute or regulation adopted prior to January 1, 1975, to verify the identity of an individual.

(c) When an individual is requested to disclose his or her Social Security account number, that individual is informed whether that disclosure is mandatory or voluntary, by what statutory or other authority such number is solicited, what uses are made of it, and what detriments, including delay in the location of records, are incurred if the number is not provided.

Subpart D—Availability of Records

§ 10.31 Requests for records.

(a) Ordinarily, each person desiring to determine whether a record pertaining to him/her is contained in a system of records covered by this part or desiring access to a record covered by this part, or to obtain a copy of such a record, shall make a request in writing addressed to the system manager. The ''Privacy Act Issuances'' published by the Office of the FEDERAL REGISTER, National Archives and Records Administration, describes the systems of records maintained by all Federal agencies, including the Department and its components. In exceptional cases oral requests are accepted. A description of DOT Privacy Act systems notices is available through the Internet free of charge at http://www.access.gpo.gov/su—docs/aces/PrivacyAct. shtml?desc015.html. See § 10.13(b) regarding inquiries concerning Privacy Act matters or requests for assistance.

(b) Each request shall specify the name of the requesting individual and the system of records in which the subject record is located or thought to be located. If assistance is required to determine the system of records identification number assigned in the systems notices, such assistance may be obtained from the appropriate Privacy Act officer or his assistant. Refer to § 10.13 for procedures for requesting assistance.

[45 FR 8993, Feb. 11, 1980, as amended at 62 FR 23667, May 1, 1997]

§ 10.33 Acknowledgment and access.

(a) Requests by an individual to determine whether he or she is the subject of a record in a system of records, or requesting access to a record in a system of records, should be acknowledged within 10 working days, where the request is by mail. For requests in person, an immediate response is given, either granting access or informing such individual when notification or access may be expected.

(b) If the response granting access or copies of the record is made within 10 working days, separate acknowledgment is not required.

(c) Although requests for access to a record are normally in writing, *e.g.*, by filing a written form or letter, it is the option of the individual to mail or present the request form in person.

§ 10.35 Conditions of disclosure.

(a) No record that is contained within a system of records of the Department is disclosed by any means of communication to any person, or to another agency, except pursuant to a written request by, or with the prior written consent of, the individual to whom the record pertains, unless disclosure of the record would be:

(1) To those officers and employees of the Department who have a need for the record in the performance of their duties;

(2) Required under part 7 of this title which implements the Freedom of Information Act;

(3) For a routine use as defined in § 10.5 and described pursuant to § 10.21(d)(4);

(4) To the Bureau of the Census for purposes of planning or carrying out a census or survey or related activity pursuant to the provisions of title 13, United States Code;

(5) To a recipient who has provided the Department with advance adequate written assurance that the record will be used solely as a statistical research or reporting record, and the record is to be transferred in a form that is not individually identifiable;

(6) To the National Archives of the United States as a record which has sufficient historical or other value to warrant its continued preservation by the U.S. Government, or for evaluation by the Administrator of General Services or his designee to determine whether the record has such value;

(7) To another agency or to an instrumentality of any governmental jurisdiction within or under the control of the United States for a civil or criminal law enforcement activity if the activity is authorized by law, and if the head of the agency or instrumentality has made a written request to the agency which maintains the record specifying the particular portion desired and the law enforcement activity for which the record is sought;

(8) To a person pursuant to a showing of compelling circumstances affecting the health or safety of an individual if upon such disclosure notification is transmitted to the last known address of such individual;

(9) To either House of the Congress, or to the extent of matters within its jurisdiction, any committee or subcommittee thereof, any joint committee of the Congress or subcommittee of any such joint committee;

(10) To the Comptroller General, or any authorized representatives, in the course of the performance of the duties of the General Accounting Office; or

(11) Pursuant to the order of a court of competent jurisdiction.

(12) To a consumer reporting agency in accordance with 31 U.S.C. 3711(f).

(b) Any individual requesting access to his or her record or to any information pertaining to that individual which is contained within a system of records within the Department has access to that record or information unless the system of records within which the record or information is contained is exempted from disclosure in accordance with subpart G, provided, however, that nothing in this part is deemed to require that an individual be given access to any information compiled in reasonable anticipation of a civil action or proceeding. No exemption contained in subpart G of part 7 of the regulations of the Office of the Secretary is relied upon to withhold from an individual any record which is otherwise accessible to such individual under the provisions of this part. Any individual who is given access to a record or information pertaining to

him is permitted to have a person of his or her own choosing accompany him and to have a copy made of all or any portion of the record or information in a form comprehensible to the individual. When deemed appropriate, the individual may be required to furnish a written statement authorizing discussion of his record in the accompanying person's presence.

(c) *Medical records.* Where requests are for access to medical records, including psychological records, the decision to release directly to the individual, or to withhold direct release, shall be made by a medical practitioner. Where the medical practitioner has ruled that direct release will do harm to the individual who is requesting access, normal release through the individual's chosen medical practitioner will be recommended. Final review and decision on appeals of disapprovals of direct release will rest with the General Counsel.

(d) Any person requesting access to records or to any information pertaining to other individuals is not granted such access unless that person can show that he or she has obtained permission for such access from the individual to whom the record pertains, unless the request comes within one of the exceptions of paragraph (a) of this section.

[45 FR 8993, Feb. 11, 1980, as amended at 62 FR 23667, May 1, 1997]

§ 10.37 Identification of individual making request.

No record or information contained in a system of records is disclosed to an individual nor is any correction of a record in accordance with subpart E made at the request of an individual unless that individual demonstrates that he or she is who he or she claims to be. Normally, identity can be proven for individuals who appear in person by the presentation of an identifying document issued by a recognized organization (*e.g.*, a driver's license or a credit card) and which contains a means of verification such as a photograph or a signature. For requests by mail, the unique identifier used in the system should be included if known. Responses to mail requests are normally sent only to the name and address listed in the system of records. In the case of particularly sensitive records, additional identification requirements may be imposed. In such cases, these additional requirements are listed in the public notice for the system.

[45 FR 8993, Feb. 11, 1980, as amended at 62 FR 23667, May 1, 1997]

§ 10.39 Location of records.

Each record made available under this subpart is available for inspection and copying during regular working hours at the place where it is located, or, upon reasonable notice, at the document inspection facilities of the Office of the Secretary or each administration. Original records may be copied but may not be released from custody. Upon payment of the appropriate fee, copies are mailed to the requester.

[62 FR 23667, May 1, 1997]

Subpart E—Correction of Records

§ 10.41 Requests for correction of records.

Any person who desires to have a record pertaining to that person corrected shall submit a written request detailing the correction and the reasons the record should be so corrected. Requests for correction of records shall be submitted to the System Manager.

[62 FR 23667, May 1, 1997]

§ 10.43 Time limits.

Within ten days (excluding Saturday, Sunday, and legal holidays) of the receipt in accordance with § 10.41 of a request by an individual to amend a record pertaining to him, the receipt of the request is acknowledged in writing. If a determination is made to correct the record as requested, the correction is promptly made. If a determination is made not to correct a record the individual is informed promptly of the right to appeal in accordance with subpart F. If an appeal of a refusal to correct a record is in accordance with subpart F, a determination whether to correct the record is made within thirty days (excluding Saturday, Sunday, and legal holidays) of the receipt of the appeal unless, for good cause shown the Administrator concerned, or in the case of the Office of the Secretary, the

General Counsel, extends such period. Where an extension is taken, the party taking the appeal is promptly notified of such fact.

§ 10.45 Statement of disagreement.

If a determination is made not to amend a record, the requester is informed of the right to file a concise statement setting forth the reasons for disagreement with the refusal to amend. In any disclosure containing information about which an individual has filed such a statement of disagreement, the portions of the record which are disputed are noted clearly and copies of the statement of disagreement provided. If the Administrator concerned or his or her delegee, or in the case of the Office of the Secretary, the General Counsel or his or her delegee, deems it appropriate, copies of a concise statement of the reasons for not making the amendments requested may be provided along with the statement of disagreement.

Subpart F—Procedures for Reconsidering Decisions not to Grant Access to or Amend Records

§ 10.51 General.

(a) Each officer or employee of the Department who, upon a request by a member of the public for a record under this part, makes a determination that access is not to be granted or who determines not to amend a record in a requested manner, gives a written statement of the reasons for that determination to the person making the request and indicates the name and title or position of each person responsible for the denial of such request and the procedure for appeal within the Department.

(b) Any person:

(1) Who has been given a determination pursuant to paragraph (a) of this section, that access will not be granted; or

(2) Who has been informed that an amendment to a requested record will not be made; may apply to the Administrator concerned, or in the case of the Office of the Secretary, to the General Counsel for review of that decision. A determination that access will not be granted or a record amended is not administratively final for the purposes of judicial review unless it was made by the Administrator concerned or his or her delegee, or the General Counsel or his or her delegee, as the case may be. Upon a determination that an appeal will be denied, the requester is informed in writing of the reasons for the determination, and the names and titles or positions of each person responsible for the determination, and that the determination may be appealed to the District Court of the United States in the district in which the complainant resides, or has his or her principal place of business, or in which the records are located, or in the District of Columbia.

(c) Each application for review must be made in writing and must include all information and arguments relied upon by the person making the request, and be submitted within 30 days of the date of the initial denial; exceptions to this time period are permitted for good reason.

(d) Upon a determination that a request for the correction of a record will be denied, the requester is informed that he may file a concise statement in accordance with § 10.45.

(e) Each application for review must indicate that it is an appeal from a denial of a request made under the Privacy Act. The envelope in which the application is sent should be marked prominently with the words ''Privacy Act.'' If these requirements are not met, the time limits described in § 10.43 do not begin to run until the application has been identified by an employee of the Department as an application under the Privacy Act and has been received by the appropriate office.

(f) The Administrator concerned, or the General Counsel, as the case may be, may require the person making the request to furnish additional information, or proof of factual allegations, and may order other proceedings appropriate in the circumstances. The decision of the Administrator concerned, or the General Counsel, as the case may be, as to the availability of the record or whether to amend the record is administratively final.

(g) The decision by the Administrator concerned, or the General Counsel, as the case may be, not to disclose a record under this part is considered a determination for the purposes of section 552a(g) of title 5, United States Code, ''Civil Remedies.''

(h) Any final decision by an Administrator or his/her delegate not to grant access to or amend a record under this part is subject to concurrence by the General Counsel or his or her delegate.

[45 FR 8993, Feb. 11, 1980, as amended at 62 FR 23667, May 1, 1997]

Subpart G—Exemptions

§ 10.61 General exemptions.

(a) The Assistant Secretary for Administration, with regard to the Investigations Divisions; the Federal Aviation Administrator, with regard to the FAA's Investigative Record System (DOT/FAA 815) and also with regard to the police functions of the National Capital Airport Police; and the Commandant of U.S. Coast Guard, with regard to the Intelligence and Security Division, may exempt from any part of the Act and this part except subsections (b), (c)(1) and (2), (e)(4)(A) through (F), (e)(6), (7), (9), (10), and (11), and (i) of the Act, and implementing §§ 10.35, 10.23(a) and (b), 10.21(d)(1) through (6), 10.81, 10.83, and 10.85, any systems of records, or portions thereof, which they maintain which consist wholly of;

(1) Information compiled for the purpose of identifying individual criminal offenders and alleged offenders and consisting only of identifying data and notations of arrests, the nature and disposition of criminal charges, sentencing, confinement, release, and parole and probation status;

(2) Information compiled for the purpose of a criminal investigation, including reports of informants and investigators, and associated with an identifiable individual; or

(3) Reports identifiable to an individual compiled at any stage of the process of enforcement of the criminal laws from arrest or indictment through release from supervision.

(b) The requirements (including general notice) of sections 553(b)(1), (2) and (3), and (c) and (e) of title 5, United States Code, will be met by publication in appendix A to this part, which must, at a minimum, specify:

(1) The name of the system; and

(2) The specific provisions of the Act from which the system is to be exempted and the reasons therefor.

(c) Any decision to exempt a system of records under this section is subject to concurrence by the General Counsel.

(d) Any person may petition the Secretary in accordance with the provisions of part 5 of this title, to institute a rulemaking proceeding for the amendment or repeal of any exemptions established under this section.

[45 FR 8993, Feb. 11, 1980, as amended at 58 FR 67697, Dec. 22, 1993]

§ 10.63 Specific exemptions.

The Secretary or his or her delegee, in the case of the Office of the Secretary; or the Administrator or his or deluge, in the case of an operating administration; or the Inspector General or his or her deluge, in the case of the Office of Inspector General, may exempt any system of records that is maintained by the Office of the Secretary, an operating administration, or the Office of Inspector General, as the case may be, from subsections (c)(3), (d), (e)(1), (e)(4)(G), (H), and (I), and (f) of the Act and implementing §§ 10.23(c); 10.35(b); 10.41; 10.43; 10.45; 10.21(a) and 10.21(d)(6), (7), and (8), under the following conditions:

(a) The system of records must consist of:

(1) Records subject to the provisions of section 552(b)(1) of title 5, United States Code;

(2) Investigatory material compiled for law enforcement purposes, other than material within the scope of § 10.61(a)(2): Provided, however, That if any individual is denied any right, privilege, or benefit to which that individual would otherwise be entitled by Federal law, or for which that individual would otherwise be eligible, as a result of the maintenance of such material, such material is provided to such individual, except to the extent that the disclosure of such material would reveal the identity of a source who furnished information to the Government under an express promise that the identity of the source would be

held in confidence, or, prior to September 27, 1975, the effective date of the Privacy Act of 1974, under an implied promise that the identity of the source would be held in confidence;

(3) Records maintained in connection with providing protective services to the President of the United States or other individuals pursuant to section 3056 of title 18, United States Code;

(4) Records required by statute to be maintained and used solely as statistical records;

(5) Investigatory material compiled solely for the purpose of determining suitability, eligibility, or qualifications for Federal civilian employment, military service, Federal contracts, or access to classified information, but only to the extent that the disclosure of such material would reveal the identity of a source who furnished information to the Government under an express promise that the identity of the source would be held in confidence, or, prior to September 27, 1975, the effective date of the Privacy Act of 1974, under an implied promise that the identity of the source would be held in confidence;

(6) Testing or examination material used solely to determine individual qualifications for appointment or promotion in the Federal service the disclosure of which would compromise the objectivity or fairness of the testing or examination process; or

(7) Evaluation material used to determine potential for promotion in the armed services, but only to the extent that the disclosure of such material would reveal the identity of a source who furnished information to the Government under an express promise that the identity of the source would be held in confidence, or, prior to the effective date of this section, under an implied promise that the identity of the source would be held in confidence.

(b) The requirements (including general notice) of sections 553 (b) (1), (2) and (3), and (c) and (e) of title 5, United States Code, will be met by publication in appendix A to this part, which must, at a minimum, specify:

(1) The name of the systems; and

(2) The specific provisions of the Act from which the system is to be exempted and the reasons therefor.

(c) Any decision to exempt a system of records under this section is subject to the concurrence of the General Counsel.

(d) Any person may petition the Secretary in accordance with the provisions of 49 CFR part 5, to institute a rulemaking for the amendment or repeal of any exemptions established under this section.

[45 FR 8993, Feb. 11, 1980, as amended at 62 FR 23667, May 1, 1997]

Subpart H—Fees

§ 10.71 General.

This subpart prescribes fees for services performed for the public under this part by the Department.

§ 10.73 Payment of fees.

The fees prescribed in this subpart may be paid by check, draft, or postal money order payable to the Treasury of the United States.

§ 10.75 Fee schedule.

(a) Copies of documents by photocopy or similar method:	
Each page not larger than 11 x 17 inches:	
First page	$.25
Each page	.05
(b) Copies of documents by typewriter: Each page	2.00
(c) Certified copies of documents:	
(1) With Department of Transportation seal	3.00
(2) True copy, without seal	1.00
(d) Photographs:	
(1) Black and white print (from negative)	1.25
(2) Black and white print (from print)	3.15
(3) Color print (from negative)	3.50
(4) Color print (from print)	6.25
(e) Duplicate data tapes—each reel of tape or fraction thereof	36.00

The applicant must furnish the necessary number of blank magnetic tapes. The tapes must be compatible for use in the supplier's computer system, ½ inch wide and 2,400 feet long, and must be capable of recording data at a density of 556 or 800 characters per inch. Unless otherwise designated, the tapes will be recorded at 556 CPI density. The Department of Transportation is not responsible for damaged tape. However, if the applicant furnishes a replacement for a damaged tape, the duplication process is completed at no additional charge.

(f) Microreproduction fees are as follows:	
(1) Microfilm copies, each 100 foot roll or less	$3.75

(2) Microfiche copies, each standard size sheet (4″ x 6″ containing up to 65 frames)	.15
(3) Apertune card to hard copy, each copy	.50
(4) 16mm microfilm to hard copy:	
First	.25
Additional	.07
(g) Computerline printer output, each 1,000 lines or fraction thereof	1.00

§ 10.77 Services performed without charge.

(a) No fee is charged for time spent in searching for records or reviewing or preparing correspondence related to records subject to this part.

(b) No fee is charged for documents furnished in response to:

(1) A request from an employee or former employee of the Department for copies of personnel records of the employee;

(2) A request from a Member of Congress for official use;

(3) A request from a State, territory, U.S. possession, county or municipal government, or an agency thereof;

(4) A request from a court that will serve as a substitute for the personal court appearance of an officer or employee of the Department;

(5) A request from a foreign government or an agency thereof, or an international organization.

(c) Documents are furnished without charge or at a reduced charge, if the Assistant Secretary of Administration or the Administrator concerned, as the case may be, determines that waiver or reduction of the fee is in the public interest, because furnishing the information can be considered as primarily benefiting the general public.

(d) When records are maintained in computer-readable form rather than human-readable form, one printed copy is made available which has been translated to human-readable form without a charge for translation but in accordance with § 10.75(g), regarding computer line-printed charges.

Subpart I—Criminal Penalties

§ 10.81 Improper disclosure.

Any officer or employee of the Department who by virtue of his or her employment or official position, has possession of, or access to, agency records which contain individually identifiable information the disclosure of which is prohibited by this part and who knowing that disclosure of the specific material is so prohibited, willfully discloses the material in any manner to any person or agency not entitled to receive it, is guilty of a misdemeanor and fined not more than $5,000 in accordance with 5 U.S.C. 552a(i)(1).

§ 10.83 Improper maintenance of records.

Any officer or employee of the Department who willfully maintains a system of records without meeting the notice requirements of § 10.21(d) of this part is guilty of a misdemeanor and fined not more than $5,000 in accordance with 5 U.S.C. 552a(i)(2).

§ 10.85 Wrongfully obtaining records.

Any person who knowingly and willfully requests or obtains any record concerning an individual from the Department under false pretenses is guilty of a misdemeanor and fined not more than $5,000 in accordance with 5 U.S.C. 552a(i)(3).

APPENDIX TO PART 10—EXEMPTIONS

Part I. General Exemptions

Those portions of the following systems of records that consist of (a) Information compiled for the purpose of identifying individual criminal offenders and alleged offenders and consisting only of identifying data and notations of arrests, the nature and disposition of criminal charges, sentencing, confinement, release, and parole and probation status; (b) information compiled for the purpose of a criminal investigation, including reports of informants and investigators, and associated with an identifiable individual; or (c) reports identifiable to an individual compiled at any stage of the process of enforcement of the criminal laws from arrest or indictment through release from supervision, are exempt from all parts of 5 U.S.C. 552a except subsections (b) (Conditions of disclosure); (c) (1) and (2) (Accounting of certain disclosures); (e)(4) (A) through (F) (Publication of existence and character of system); (e)(6) (Ensure records are accurate, relevant, timely, and complete before disclosure to person other than an agency and other than pursuant to a Freedom of Information Act request), (7) (Restrict recordkeeping on First Amendment rights), (9) (Rules of conduct), (10) (Safeguards), and (11) (Routine use publication); and (i) (Criminal penalties):

A. The Investigative Records System maintained by the Assistant Inspector General for Investigations, Office of the Inspector General, Office of the Secretary (DOT/OST 100).

B. Police Warrant Files and Central Files maintained by the Federal Aviation Administration (DOT/FAA 807).

C. Law Enforcement Information System, maintained by the Office of Law Enforcement and Defense Operations, U.S. Coast Guard (DOT/CG 613).

D. Investigations and Security Investigative Case Systems, maintained by the Investigations and Security Division, U.S. Coast Guard (DOT/CG 611).

E. The Investigative Records System maintained by the Federal Aviation Administration regarding criminal investigations conducted by offices of Investigations and Security at headquarters and FAA Regional and Center Security Divisions (DOT/FAA 815).

F. Joint Maritime Intelligence Element (JMIE) Support System, maintained by the Operations Systems, Center, US Coast Guard (DOT/CG 642).

These exemptions are justified for the following reasons:

1. From subsection (c)(3), because making available to a record subject the accounting of disclosures from records concerning him/her would reveal investigative interest by not only DOT but also the recipient agency, thereby permitting the record subject to take appropriate measures to impede the investigation, as by destroying evidence, intimidating potential witnesses, fleeing the area to avoid the thrust of the investigation, etc.

2. From subsections (d), (e)(4) (G) and (H), (f), and (g), because granting an individual access to investigative records, and granting him/her rights to amend/contest that information, interfere with the overall law enforcement process by revealing a pending sensitive investigation, possibly identify a confidential source, disclose information that would constitute an unwarranted invasion of another individual's personal privacy, reveal a sensitive investigative technique, or constitute a potential danger to the health or safety of law enforcement personnel.

3. From subsection (e)(1), because it is often impossible to determine relevancy or necessity of information in the early stages of an investigation. The value of such information is a question of judgement and timing: what appears relevant and necessary when collected may ultimately be evaluated and viewed as irrelevant and unnecessary to an investigation. In addition, DOT may obtain information concerning the violation of laws other than those within the scope of its jurisdiction. In the interest of effective law enforcement, DOT should retain this information because it may aid in establishing patterns of unlawful activity and provide leads for other law enforcement agencies. Further, in obtaining evidence during an investigation, information may be provided to DOT that relates to matters incidental to the main purpose of the investigation but that may be pertinent to the investigative jurisdiction of another agency. Such information cannot readily be identified.

4. From subsection (e)(2), because in a law enforcement investigation it is usually counterproductive to collect information to the greatest extent practicable directly from the subject of the information. It is not always feasible to rely upon the subject of an investigation as a source for information that may implicate him/her in illegal activities. In addition, collecting information directly from the subject could seriously compromise an investigation by prematurely revealing its nature and scope, or could provide the subject with an opportunity to conceal criminal activities, or intimidate potential sources, in order to avoid apprehension.

5. From subsection (e)(3), because providing such notice to the subject of an investigation, or to other individual sources, could seriously compromise the investigation by prematurely revealing its nature and scope, or could inhibit cooperation, permit the subject to evade apprehension, or cause interference with undercover activities.

Part II. Specific Exemptions

A. The following systems of records are exempt from subsection (c)(3) (Accounting of Certain Disclosures), (d) (Access to Records), (e)(4)(G), (H), and (I) (Agency Requirements), and (f) (Agency Rules) of 5 USC 552a, to the extent that they contain investigatory material compiled for law enforcement purposes in accordance with 5 USC 552a(k)(2):

1. Investigative Record System (DOT/FAA 815) maintained by the Federal Aviation Administration at the Office of Civil Aviation Security in Washington, DC; the FAA regional Civil Aviation Security Divisions; the Civil Aviation Security Division at the Mike Monroney Aeronautical Center in Oklahoma City, Oklahoma; the FAA Civil Aviation Security Staff at the FAA Technical Center in Atlantic City, New Jersey; and the various Federal Records Centers located throughout the country.

2. FHWA Investigations Case File System, maintained by the Office of Program Review and Investigations, Federal Highway Administration (DOT/FHWA 214).

3. FHWA Motor Carrier Safety Proposed Civil and Criminal Enforcement Cases, maintained by the Bureau of Motor Carrier Safety, Federal Highway Administration (DOT/FHWA 204).

4. Recreational Boating and Law Enforcement Cases (DOT/CG 505), maintained by the Office of Boating Safety, U.S. Coast Guard.

5. Port Safety Reporting System—Individual Violation Histories (DOT/CG 561),

maintained by the Office of Marine Environment and Systems, U.S. Coast Guard.

6. Merchant Vessel Casualty Reporting System (DOT/CG 590), maintained by the Office of Merchant Marine Safety, U.S. Coast Guard.

7. U.S. Merchant Seaman's Records (DOT/CG 589), maintained by the Office of Merchant Marine Safety, U.S. Coast Guard.

8. Intelligence and Security Investigative Case Systems (DOT/CG 611), maintained by the Office of Operations, U.S. Coast Guard.

9. Port Security Case System (DOT/CG 612), maintained by the Office of Operations, U.S. Coast Guard.

10. DOT/NHTSA Investigations of Alleged Misconduct or Conflict of Interest, maintained by the Associate Administrator for Administration, National Highway Traffic Safety Administration (DOT/NHTSA 458).

11. Investigations of Violations of Marine Safety Laws (DOT/CG 587), maintained by the Office of Merchant Marine Safety, U.S. Coast Guard.

12. Civil Aviation Security System (DOT/FAA 813), maintained by the Office of Civil Aviation Security Policy and Planning, Federal Aviation Administration.

13. Law Enforcement Information System, maintained by the Office of Law Enforcement and Defense Operations, U.S. Coast Guard (DOT/CG 613).

14. Joint Maritime Intelligence Element (JMIE) Support System, maintained by the Operations Systems, Center, US Coast Guard (DOT/CG 642).

15. Vessel Identification System, maintained by the Operations Systems Center, U.S. Coast Guard (DOT/CG 590). The purpose of this exemption is to prevent persons who are the subjects of criminal investigations from learning too early in the investigative process that they are subjects, what information there is in Coast Guard files that indicates that they may have committed unlawful conduct, and who provided such information.

16. Marine Safety Information System, maintained by the Operations Systems Center, U.S. Coast Guard (DOT/CG 588). The purpose of this exemption is to prevent persons who are the subjects of criminal investigations from learning too early in the investigative process that they are subjects, what information there is in Coast Guard files that indicates that they may have committed unlawful conduct, and who provided such information.

These exemptions are justified for the following reasons:

1. From subsection (c)(3), because making available to a record subject the accounting of disclosures from records concerning him/her would reveal investigative interest by not only DOT but also the recipient agency, thereby permitting the record subject to take appropriate measures to impede the investigation, as by destroying evidence, intimidating potential witnesses, fleeing the area to avoid the thrust of the investigation, etc.

2. From subsections (d), (e)(4) (G) and (H), (f), and (g), because granting an individual access to investigative records, and granting him/her rights to amend/disagree with that information, interfere with the overall law enforcement process by revealing a pending sensitive investigation, possibly identify a confidential source, disclose information that would constitute an unwarranted invasion of another individual's personal privacy, reveal a sensitive investigative technique, or constitute a potential danger to the health or safety of law enforcement personnel.

B. The following systems of records are exempt from subsections (c)(3) (Accounting of Certain Disclosures) and (d) (Access to Records) of 5 U.S.C. 552a, in accordance with 5 U.S.C. 552a(k)(2):

1. General Air Transportation Records on Individuals, maintained by various offices in the Federal Aviation Administration (DOT/FAA 847).

2. Investigative Records System, maintained by the Assistant Inspector General for Investigations in the Office of the Inspector General (DOT/OST 100).

These exemptions are justified for the following reasons:

1. From subsection (c)(3), because making available to a record subject the accounting of disclosures from records concerning him/her would reveal investigative interest by not only DOT but also the recipient agency, thereby permitting the record subject to take appropriate measures to impede the investigation, as by destroying evidence, intimidating potential witnesses, fleeing the area to avoid the thrust of the investigation, etc.

2. From subsection (d), because granting an individual access to investigative records could interfere with the overall law enforcement process by revealing a pending sensitive investigation, possibly identify a confidential source, disclose information that would constitute an unwarranted invasion of another individual's personal privacy, reveal a sensitive investigative technique, or constitute a potential danger to the health or safety of law enforcement personnel.

C. The system of records known as the Alaska Railroad Examination of Operating Personnel, maintained by the Alaska Railroad, Federal Railroad Administration (DOT/FRA 100), is exempt from the provisions of subsection (d) of 5 U.S.C. 552a. The release of these records would compromise their value as impartial measurement standards for appointment and promotion within the Federal Service.

D. Those portions of the following systems of records consisting of investigatory material compiled for the purpose of determining

suitability, eligibility, or qualifications for Federal civilian employment, military service, or access to classified information or used to determine potential for promotion in the armed services, are exempt from sections (c)(3) (Accounting of Certain Disclosures), (d) (Access to Records), (e)(4) (G), (H), and (I) (Agency Requirements), and (f) (Agency Rules) of 5 U.S.C. 552a to the extent that disclosure of such material would reveal the identity of a source who provided information to the Government under an express or, prior to September 27, 1975, an implied promise of confidentiality (5 U.S.C. 552a(k) (5) and (7)):

1. Investigative Records System, maintained by the Assistant Inspector General for Investigations in the Office of the Inspector General (DOT/OST 100).

2. Intelligence and Security Investigative Case System (DOT/CG 611), maintained by the Office of Operations, U.S. Coast Guard.

3. Officer Selection and Appointment System (DOT/CG 625), maintained by the Office of Personnel, U.S. Coast Guard.

4. Official Officer Service Records (DOT/CG 626), maintained by the Office of Personnel, U.S. Coast Guard.

5. Enlisted Recruiting Selection Record System maintained by the Office of Personnel, U.S. Coast Guard.

6. Officer, Enlisted, and Recruiting Selection Test Files (DOT/CG 628), maintained by the Office of Personnel, U.S. Coast Guard.

7. Enlisted Personnel Record System, (DOT/CG 629), maintained by the Office of Personnel, U.S. Coast Guard.

8. Coast Guard Personnel Security Program (DOT/CG 633), maintained by the Office of Personnel, U.S. Coast Guard.

9. Official Coast Guard Reserve Service Record System (DOT/CG 676), maintained by the Office of Reserve, U.S. Coast Guard.

10. Investigative Record System, maintained by the Federal Aviation Administration at FAA Regional and Center Air Transportation Security Divisions; the Investigations and Security Division, Aeronautical Center; and Office of Investigations and Security, Headquarters, Washington, D.C. (DOT/FAA 815).

11. Military Training and Education Records (DOT/CG 622), maintained by the Office of Personnel, U.S. Coast Guard.

12. Files pursuant to suitability for employment with National Highway Traffic Safety Administration (DOT/NHTSA–457) containing confidential investigatory reports.

The purpose of these exemptions is to prevent disclosure of the identities of sources who provide information to the government concerning the suitability, eligibility, or qualifications of individuals for Federal civilian employment, contracts, access to classified information, or appointment or promotion in the armed services, and who are expressly or, prior to September 27, 1975, implied promised confidentiality (5 U.S.C. 552a(k) (5) and (7)).

E. Those portions of the following systems of records consisting of testing or examination material used solely to determine individual qualifications for appointment or promotion in the Federal Service are exempt from subsections (c)(3) (Accounting of Certain Disclosures), (d) (Access to Records), (e)(4) (G), (H) and (I) (Agency Requirements), and (f) (Agency Rules) of 5 U.S.C. 552a:

1. Officer, Enlisted and Recruiting Selection Test Files (DOT/CG 628), maintained by the Office of Personnel, U.S. Coast Guard.

2. Official Coast Guard Reserve Service Record System (DOT/CG 676), maintained by the Office of Reserve, U.S. Coast Guard.

3. Military Training and Education Records (DOT/CG 622), maintained by the Office of Personnel, U.S. Coast Guard.

4. Reference Files (DOT/NHTSA 457), maintained by the National Highway Traffic Safety Administration personnel offices to determine fitness for employment prior to hiring.

The purpose of these exemptions is to preserve the value of these records as impartial measurement standards for appointment and promotion within the Federal service.

F. Those portions of the following systems of records which consist of information properly classified in the interest of national defense or foreign policy in accordance with 5 U.S.C. 552(b)(1) are exempt from sections (c)(3) (Accounting of Certain Disclosures), (d) (Access to Records), (e)(4) (G), (H) and (I) (Agency Requirements), and (f) (Agency Rules) of 5 U.S.C. 552a:

1. Investigative Record System maintained by the Assistant Inspector General for Investigations in the Office of the Inspector General (DOT/OST 100).

2. Personnel Security Records System, maintained by the Office of Investigations and Security, Office of the Secretary (DOT/OST 016).

3. Civil Aviation Security System (DOT/FAA 813), maintained by the Office of Civil Aviation Security, Federal Aviation Administration.

4. Joint Maritime Intelligence Element (JMIE) Support System, maintained by the Operations Systems Center, US Coast Guard (DOT/CG 642).

The purpose of these exemptions is to prevent the disclosure of material authorized to be kept secret in the interest of national defense or foreign policy, in accordance with 5 U.S.C. 552(b)(1) and 552a(k)(1).

G. Those portions of the following systems of records which consist of information properly classified in the interest of national defense or foreign policy in accordance with 5 U.S.C. 552a(b)(1) are exempt from subsections (c)(3) (Accounting of Certain Disclosures) and (d) (Access to Records) of 5 U.S.C. 552a:

1. Investigative Record System (DOT/FAA 815) maintained by the Federal Aviation Administration at the Office of Civil Aviation Security in Washington, DC; the FAA regional Civil Aviation Security Divisions; the Civil Aviation Security Division at the Mike Monroney Aeronautical Center in Oklahoma City, Oklahoma; the FAA Civil Aviation Security Staff at the FAA Technical Center in Atlantic City, New Jersey; and the various Federal Records Centers located throughout the country.

The purpose of these exemptions is to prevent the disclosure of material authorized to be kept secret in the interest of national defense or foreign policy, in accordance with 5 U.S.C. 552(b)(1) and 552a(k)(1).

[45 FR 8993, Feb. 11, 1980, as amended at 58 FR 67697, Dec. 22, 1993; 59 FR 13662, Mar. 23, 1994; 60 FR 43983, Aug. 24, 1995. Redesignated at 62 FR 23667, May 1, 1997, as amended at 63 FR 2172, Jan. 14, 1998; 63 FR 4197, Jan. 28, 1998]

PART 11—PROTECTION OF HUMAN SUBJECTS

Sec.

11.101 To what does this policy apply?
11.102 Definitions.
11.103 Assuring compliance with this policy—research conducted or supported by any Federal Department or Agency.
11.104–11.106 [Reserved]
11.107 IRB Membership.
11.108 IRB functions and operations.
11.109 IRB review of research.
11.110 Expedited review procedures for certain kinds of research involving no more than minimal risk, and for minor changes in approved research.
11.111 Criteria for IRB approval of research.
11.112 Review by institution.
11.113 Suspension or termination of IRB approval of research.
11.114 Cooperative research.
11.115 IRB records.
11.116 General requirements for informed consent.
11.117 Documentation of informed consent.
11.118 Applications and proposals lacking definite plans for involvement of human subjects.
11.119 Research undertaken without the intention of involving human subjects.
11.120 Evaluation and disposition of applications and proposals for research to be conducted or supported by a Federal Department or Agency.
11.121 [Reserved]
11.122 Use of Federal funds.
11.123 Early termination of research support: Evaluation of applications and proposals.
11.124 Conditions.

AUTHORITY: 5 U.S.C. 301; 42 U.S.C. 300v–1(b).

SOURCE: 56 FR 28012, 28023, June 18, 1991, unless otherwise noted.

§ 11.101 To what does this policy apply?

(a) Except as provided in paragraph (b) of this section, this policy applies to all research involving human subjects conducted, supported or otherwise subject to regulation by any federal department or agency which takes appropriate administrative action to make the policy applicable to such research. This includes research conducted by federal civilian employees or military personnel, except that each department or agency head may adopt such procedural modifications as may be appropriate from an administrative standpoint. It also includes research conducted, supported, or otherwise subject to regulation by the federal government outside the United States.

(1) Research that is conducted or supported by a federal department or agency, whether or not it is regulated as defined in § 11.102(e), must comply with all sections of this policy.

(2) Research that is neither conducted nor supported by a federal department or agency but is subject to regulation as defined in § 11.102(e) must be reviewed and approved, in compliance with § 11.101, § 11.102, and § 11.107 through § 11.117 of this policy, by an institutional review board (IRB) that operates in accordance with the pertinent requirements of this policy.

(b) Unless otherwise required by department or agency heads, research activities in which the only involvement of human subjects will be in one or more of the following categories are exempt from this policy:

(1) Research conducted in established or commonly accepted educational settings, involving normal educational practices, such as (i) research on regular and special education instructional strategies, or (ii) research on the effectiveness of or the comparison among instructional techniques, curricula, or classroom management methods.

(2) Research involving the use of educational tests (cognitive, diagnostic,

aptitude, achievement), survey procedures, interview procedures or observation of public behavior, unless:

(i) Information obtained is recorded in such a manner that human subjects can be identified, directly or through identifiers linked to the subjects; and

(ii) Any disclosure of the human subjects' responses outside the research could reasonably place the subjects at risk of criminal or civil liability or be damaging to the subjects' financial standing, employability, or reputation.

(3) Research involving the use of educational tests (cognitive, diagnostic, aptitude, achievement), survey procedures, interview procedures, or observation of public behavior that is not exempt under paragraph (b)(2) of this section, if:

(i) The human subjects are elected or appointed public officials or candidates for public office; or (ii) federal statute(s) require(s) without exception that the confidentiality of the personally identifiable information will be maintained throughout the research and thereafter.

(4) Research, involving the collection or study of existing data, documents, records, pathological specimens, or diagnostic specimens, if these sources are publicly available or if the information is recorded by the investigator in such a manner that subjects cannot be identified, directly or through identifiers linked to the subjects.

(5) Research and demonstration projects which are conducted by or subject to the approval of department or agency heads, and which are designed to study, evaluate, or otherwise examine:

(i) Public benefit or service programs; (ii) procedures for obtaining benefits or services under those programs; (iii) possible changes in or alternatives to those programs or procedures; or (iv) possible changes in methods or levels of payment for benefits or services under those programs.

(6) Taste and food quality evaluation and consumer acceptance studies, (i) if wholesome foods without additives are consumed or (ii) if a food is consumed that contains a food ingredient at or below the level and for a use found to be safe, or agricultural chemical or environmental contaminant at or below the level found to be safe, by the Food and Drug Administration or approved by the Environmental Protection Agency or the Food Safety and Inspection Service of the U.S. Department of Agriculture.

(c) Department or agency heads retain final judgment as to whether a particular activity is covered by this policy.

(d) Department or agency heads may require that specific research activities or classes of research activities conducted, supported, or otherwise subject to regulation by the department or agency but not otherwise covered by this policy, comply with some or all of the requirements of this policy.

(e) Compliance with this policy requires compliance with pertinent federal laws or regulations which provide additional protections for human subjects.

(f) This policy does not affect any state or local laws or regulations which may otherwise be applicable and which provide additional protections for human subjects.

(g) This policy does not affect any foreign laws or regulations which may otherwise be applicable and which provide additional protections to human subjects of research.

(h) When research covered by this policy takes place in foreign countries, procedures normally followed in the foreign countries to protect human subjects may differ from those set forth in this policy. [An example is a foreign institution which complies with guidelines consistent with the World Medical Assembly Declaration (Declaration of Helsinki amended 1989) issued either by sovereign states or by an organization whose function for the protection of human research subjects is internationally recognized.] In these circumstances, if a department or agency head determines that the procedures prescribed by the institution afford protections that are at least equivalent to those provided in this policy, the department or agency head may approve the substitution of the foreign procedures in lieu of the procedural requirements provided in this policy. Except when otherwise required by statute, Executive Order, or the department or agency head, notices of

these actions as they occur will be published in the FEDERAL REGISTER or will be otherwise published as provided in department or agency procedures.

(i) Unless otherwise required by law, department or agency heads may waive the applicability of some or all of the provisions of this policy to specific research activities or classes of research activities otherwise covered by this policy. Except when otherwise required by statute or Executive Order, the department or agency head shall forward advance notices of these actions to the Office for Protection from Research Risks, Department of Health and Human Services (HHS), and shall also publish them in the FEDERAL REGISTER or in such other manner as provided in department or agency procedures.[1]

[56 FR 28012, 28023, June 18, 1991; 56 FR 29756, June 28, 1991]

§ 11.102 Definitions.

(a) *Department or agency head* means the head of any federal department or agency and any other officer or employee of any department or agency to whom authority has been delegated.

(b) *Institution* means any public or private entity or agency (including federal, state, and other agencies).

(c) *Legally authorized representative* means an individual or judicial or other body authorized under applicable law to consent on behalf of a prospective subject to the subject's participation in the procedure(s) involved in the research.

(d) *Research* means a systematic investigation, including research development, testing and evaluation, designed to develop or contribute to generalizable knowledge. Activities which meet this definition constitute research for purposes of this policy, whether or not they are conducted or supported under a program which is considered research for other purposes. For example, some demonstration and service programs may include research activities.

(e) *Research subject to regulation*, and similar terms are intended to encompass those research activities for which a federal department or agency has specific responsibility for regulating as a research activity, (for example, Investigational New Drug requirements administered by the Food and Drug Administration). It does not include research activities which are incidentally regulated by a federal department or agency solely as part of the department's or agency's broader responsibility to regulate certain types of activities whether research or non-research in nature (for example, Wage and Hour requirements administered by the Department of Labor).

(f) *Human subject* means a living individual about whom an investigator (whether professional or student) conducting research obtains

(1) Data through intervention or interaction with the individual, or

(2) Identifiable private information.

Intervention includes both physical procedures by which data are gathered (for example, venipuncture) and manipulations of the subject or the subject's environment that are performed for research purposes. Interaction includes communication or interpersonal contact between investigator and subject. ''Private information'' includes information about behavior that occurs in a context in which an individual can reasonably expect that no observation or recording is taking place, and information which has been provided for specific purposes by an individual and which the individual can reasonably expect will not be made public (for example, a medical record). Private information must be individually identifiable (i.e., the identity of the subject is or may readily be ascertained by the investigator or associated with the information) in order for obtaining the

[1] Institutions with HHS-approved assurances on file will abide by provisions of title 45 CFR part 46 subparts A–D. Some of the other Departments and Agencies have incorporated all provisions of title 45 CFR part 46 into their policies and procedures as well. However, the exemptions at 45 CFR 46.101(b) do not apply to research involving prisoners, fetuses, pregnant women, or human in vitro fertilization, subparts B and C. The exemption at 45 CFR 46.101(b)(2), for research involving survey or interview procedures or observation of public behavior, does not apply to research with children, subpart D, except for research involving observations of public behavior when the investigator(s) do not participate in the activities being observed.

information to constitute research involving human subjects.

(g) *IRB* means an institutional review board established in accord with and for the purposes expressed in this policy.

(h) *IRB approval* means the determination of the IRB that the research has been reviewed and may be conducted at an institution within the constraints set forth by the IRB and by other institutional and federal requirements.

(i) *Minimal risk* means that the probability and magnitude of harm or discomfort anticipated in the research are not greater in and of themselves than those ordinarily encountered in daily life or during the performance of routine physical or psychological examinations or tests.

(j) *Certification* means the official notification by the institution to the supporting department or agency, in accordance with the requirements of this policy, that a research project or activity involving human subjects has been reviewed and approved by an IRB in accordance with an approved assurance.

§ 11.103 Assuring compliance with this policy—research conducted or supported by any Federal Department or Agency.

(a) Each institution engaged in research which is covered by this policy and which is conducted or supported by a federal department or agency shall provide written assurance satisfactory to the department or agency head that it will comply with the requirements set forth in this policy. In lieu of requiring submission of an assurance, individual department or agency heads shall accept the existence of a current assurance, appropriate for the research in question, on file with the Office for Protection from Research Risks, HHS, and approved for federalwide use by that office. When the existence of an HHS-approved assurance is accepted in lieu of requiring submission of an assurance, reports (except certification) required by this policy to be made to department and agency heads shall also be made to the Office for Protection from Research Risks, HHS.

(b) Departments and agencies will conduct or support research covered by this policy only if the institution has an assurance approved as provided in this section, and only if the institution has certified to the department or agency head that the research has been reviewed and approved by an IRB provided for in the assurance, and will be subject to continuing review by the IRB. Assurances applicable to federally supported or conducted research shall at a minimum include:

(1) A statement of principles governing the institution in the discharge of its responsibilities for protecting the rights and welfare of human subjects of research conducted at or sponsored by the institution, regardless of whether the research is subject to federal regulation. This may include an appropriate existing code, declaration, or statement of ethical principles, or a statement formulated by the institution itself. This requirement does not preempt provisions of this policy applicable to department- or agency-supported or regulated research and need not be applicable to any research exempted or waived under § 11.101 (b) or (i).

(2) Designation of one or more IRBs established in accordance with the requirements of this policy, and for which provisions are made for meeting space and sufficient staff to support the IRB's review and recordkeeping duties.

(3) A list of IRB members identified by name; earned degrees; representative capacity; indications of experience such as board certifications, licenses, etc., sufficient to describe each member's chief anticipated contributions to IRB deliberations; and any employment or other relationship between each member and the institution; for example: full-time employee, part-time employee, member of governing panel or board, stockholder, paid or unpaid consultant. Changes in IRB membership shall be reported to the department or agency head, unless in accord with § 11.103(a) of this policy, the existence of an HHS-approved assurance is accepted. In this case, change in IRB membership shall be reported to the Office for Protection from Research Risks, HHS.

(4) Written procedures which the IRB will follow (i) for conducting its initial

and continuing review of research and for reporting its findings and actions to the investigator and the institution; (ii) for determining which projects require review more often than annually and which projects need verification from sources other than the investigators that no material changes have occurred since previous IRB review; and (iii) for ensuring prompt reporting to the IRB of proposed changes in a research activity, and for ensuring that such changes in approved research, during the period for which IRB approval has already been given, may not be initiated without IRB review and approval except when necessary to eliminate apparent immediate hazards to the subject.

(5) Written procedures for ensuring prompt reporting to the IRB, appropriate institutional officials, and the department or agency head of (i) any unanticipated problems involving risks to subjects or others or any serious or continuing noncompliance with this policy or the requirements or determinations of the IRB and (ii) any suspension or termination of IRB approval.

(c) The assurance shall be executed by an individual authorized to act for the institution and to assume on behalf of the institution the obligations imposed by this policy and shall be filed in such form and manner as the department or agency head prescribes.

(d) The department or agency head will evaluate all assurances submitted in accordance with this policy through such officers and employees of the department or agency and such experts or consultants engaged for this purpose as the department or agency head determines to be appropriate. The department or agency head's evaluation will take into consideration the adequacy of the proposed IRB in light of the anticipated scope of the institution's research activities and the types of subject populations likely to be involved, the appropriateness of the proposed initial and continuing review procedures in light of the probable risks, and the size and complexity of the institution.

(e) On the basis of this evaluation, the department or agency head may approve or disapprove the assurance, or enter into negotiations to develop an approvable one. The department or agency head may limit the period during which any particular approved assurance or class of approved assurances shall remain effective or otherwise condition or restrict approval.

(f) Certification is required when the research is supported by a federal department or agency and not otherwise exempted or waived under § 11.101 (b) or (i). An institution with an approved assurance shall certify that each application or proposal for research covered by the assurance and by § 11.103 of this Policy has been reviewed and approved by the IRB. Such certification must be submitted with the application or proposal or by such later date as may be prescribed by the department or agency to which the application or proposal is submitted. Under no condition shall research covered by § 11.103 of the Policy be supported prior to receipt of the certification that the research has been reviewed and approved by the IRB. Institutions without an approved assurance covering the research shall certify within 30 days after receipt of a request for such a certification from the department or agency, that the application or proposal has been approved by the IRB. If the certification is not submitted within these time limits, the application or proposal may be returned to the institution.

(Approved by the Office of Management and Budget under control number 9999–0020)

[56 FR 28012, 28023, June 18, 1991; 56 FR 29756, June 28, 1991]

§§ 11.104–11.106 [Reserved]

§ 11.107 IRB membership.

(a) Each IRB shall have at least five members, with varying backgrounds to promote complete and adequate review of research activities commonly conducted by the institution. The IRB shall be sufficiently qualified through the experience and expertise of its members, and the diversity of the members, including consideration of race, gender, and cultural backgrounds and sensitivity to such issues as community attitudes, to promote respect for its advice and counsel in safeguarding the rights and welfare of human subjects. In addition to possessing the professional competence

necessary to review specific research activities, the IRB shall be able to ascertain the acceptability of proposed research in terms of institutional commitments and regulations, applicable law, and standards of professional conduct and practice. The IRB shall therefore include persons knowledgeable in these areas. If an IRB regularly reviews research that involves a vulnerable category of subjects, such as children, prisoners, pregnant women, or handicapped or mentally disabled persons, consideration shall be given to the inclusion of one or more individuals who are knowledgeable about and experienced in working with these subjects.

(b) Every nondiscriminatory effort will be made to ensure that no IRB consists entirely of men or entirely of women, including the institution's consideration of qualified persons of both sexes, so long as no selection is made to the IRB on the basis of gender. No IRB may consist entirely of members of one profession.

(c) Each IRB shall include at least one member whose primary concerns are in scientific areas and at least one member whose primary concerns are in nonscientific areas.

(d) Each IRB shall include at least one member who is not otherwise affiliated with the institution and who is not part of the immediate family of a person who is affiliated with the institution.

(e) No IRB may have a member participate in the IRB's initial or continuing review of any project in which the member has a conflicting interest, except to provide information requested by the IRB.

(f) An IRB may, in its discretion, invite individuals with competence in special areas to assist in the review of issues which require expertise beyond or in addition to that available on the IRB. These individuals may not vote with the IRB.

§ 11.108 IRB functions and operations.

In order to fulfill the requirements of this policy each IRB shall:

(a) Follow written procedures in the same detail as described in § 11.103(b)(4) and, to the extent required by, § 11.103(b)(5).

(b) Except when an expedited review procedure is used (see § 11.110), review proposed research at convened meetings at which a majority of the members of the IRB are present, including at least one member whose primary concerns are in nonscientific areas. In order for the research to be approved, it shall receive the approval of a majority of those members present at the meeting.

§ 11.109 IRB Review of research.

(a) An IRB shall review and have authority to approve, require modifications in (to secure approval), or disapprove all research activities covered by this policy.

(b) An IRB shall require that information given to subjects as part of informed consent is in accordance with § 11.116. The IRB may require that information, in addition to that specifically mentioned in § 11.116, be given to the subjects when in the IRB's judgment the information would meaningfully add to the protection of the rights and welfare of subjects.

(c) An IRB shall require documentation of informed consent or may waive documentation in accordance with § 11.117.

(d) An IRB shall notify investigators and the institution in writing of its decision to approve or disapprove the proposed research activity, or of modifications required to secure IRB approval of the research activity. If the IRB decides to disapprove a research activity, it shall include in its written notification a statement of the reasons for its decision and give the investigator an opportunity to respond in person or in writing.

(e) An IRB shall conduct continuing review of research covered by this policy at intervals appropriate to the degree of risk, but not less than once per year, and shall have authority to observe or have a third party observe the consent process and the research.

(Approved by the Office of Management and Budget under control number 9999–0020)

§ 11.110 Expedited review procedures for certain kinds of research involving no more than minimal risk, and for minor changes in approved research.

(a) The Secretary, HHS, has established, and published as a Notice in the FEDERAL REGISTER, a list of categories of research that may be reviewed by the IRB through an expedited review procedure. The list will be amended, as appropriate after consultation with other departments and agencies, through periodic republication by the Secretary, HHS, in the FEDERAL REGISTER. A copy of the list is available from the Office for Protection from Research Risks, National Institutes of Health, HHS, Bethesda, Maryland 20892.

(b) An IRB may use the expedited review procedure to review either or both of the following:

(1) Some or all of the research appearing on the list and found by the reviewer(s) to involve no more than minimal risk,

(2) Minor changes in previously approved research during the period (of one year or less) for which approval is authorized.

Under an expedited review procedure, the review may be carried out by the IRB chairperson or by one or more experienced reviewers designated by the chairperson from among members of the IRB. In reviewing the research, the reviewers may exercise all of the authorities of the IRB except that the reviewers may not disapprove the research. A research activity may be disapproved only after review in accordance with the non-expedited procedure set forth in § 11.108(b).

(c) Each IRB which uses an expedited review procedure shall adopt a method for keeping all members advised of research proposals which have been approved under the procedure.

(d) The department or agency head may restrict, suspend, terminate, or choose not to authorize an institution's or IRB's use of the expedited review procedure.

§ 11.111 Criteria for IRB approval of research.

(a) In order to approve research covered by this policy the IRB shall determine that all of the following requirements are satisfied:

(1) Risks to subjects are minimized: (i) By using procedures which are consistent with sound research design and which do not unnecessarily expose subjects to risk, and (ii) whenever appropriate, by using procedures already being performed on the subjects for diagnostic or treatment purposes.

(2) Risks to subjects are reasonable in relation to anticipated benefits, if any, to subjects, and the importance of the knowledge that may reasonably be expected to result. In evaluating risks and benefits, the IRB should consider only those risks and benefits that may result from the research (as distinguished from risks and benefits of therapies subjects would receive even if not participating in the research). The IRB should not consider possible long-range effects of applying knowledge gained in the research (for example, the possible effects of the research on public policy) as among those research risks that fall within the purview of its responsibility.

(3) Selection of subjects is equitable. In making this assessment the IRB should take into account the purposes of the research and the setting in which the research will be conducted and should be particularly cognizant of the special problems of research involving vulnerable populations, such as children, prisoners, pregnant women, mentally disabled persons, or economically or educationally disadvantaged persons.

(4) Informed consent will be sought from each prospective subject or the subject's legally authorized representative, in accordance with, and to the extent required by § 11.116.

(5) Informed consent will be appropriately documented, in accordance with, and to the extent required by § 11.117.

(6) When appropriate, the research plan makes adequate provision for monitoring the data collected to ensure the safety of subjects.

(7) When appropriate, there are adequate provisions to protect the privacy of subjects and to maintain the confidentiality of data.

(b) When some or all of the subjects are likely to be vulnerable to coercion

or undue influence, such as children, prisoners, pregnant women, mentally disabled persons, or economically or educationally disadvantaged persons, additional safeguards have been included in the study to protect the rights and welfare of these subjects.

§ 11.112 Review by institution.

Research covered by this policy that has been approved by an IRB may be subject to further appropriate review and approval or disapproval by officials of the institution. However, those officials may not approve the research if it has not been approved by an IRB.

§ 11.113 Suspension or termination of IRB approval of research.

An IRB shall have authority to suspend or terminate approval of research that is not being conducted in accordance with the IRB's requirements or that has been associated with unexpected serious harm to subjects. Any suspension or termination of approval shall include a statement of the reasons for the IRB's action and shall be reported promptly to the investigator, appropriate institutional officials, and the department or agency head.

(Approved by the Office of Management and Budget under control number 9999–0020)

§ 11.114 Cooperative research.

Cooperative research projects are those projects covered by this policy which involve more than one institution. In the conduct of cooperative research projects, each institution is responsible for safeguarding the rights and welfare of human subjects and for complying with this policy. With the approval of the department or agency head, an institution participating in a cooperative project may enter into a joint review arrangement, rely upon the review of another qualified IRB, or make similar arrangements for avoiding duplication of effort.

§ 11.115 IRB records.

(a) An institution, or when appropriate an IRB, shall prepare and maintain adequate documentation of IRB activities, including the following:

(1) Copies of all research proposals reviewed, scientific evaluations, if any, that accompany the proposals, approved sample consent documents, progress reports submitted by investigators, and reports of injuries to subjects.

(2) Minutes of IRB meetings which shall be in sufficient detail to show attendance at the meetings; actions taken by the IRB; the vote on these actions including the number of members voting for, against, and abstaining; the basis for requiring changes in or disapproving research; and a written summary of the discussion of controverted issues and their resolution.

(3) Records of continuing review activities.

(4) Copies of all correspondence between the IRB and the investigators.

(5) A list of IRB members in the same detail as described is § 11.103(b)(3).

(6) Written procedures for the IRB in the same detail as described in § 11.103(b)(4) and § 11.103(b)(5).

(7) Statements of significant new findings provided to subjects, as required by § 11.116(b)(5).

(b) The records required by this policy shall be retained for at least 3 years, and records relating to research which is conducted shall be retained for at least 3 years after completion of the research. All records shall be accessible for inspection and copying by authorized representatives of the department or agency at reasonable times and in a reasonable manner.

(Approved by the Office of Management and Budget under control number 9999–0020)

§ 11.116 General requirements for informed consent.

Except as provided elsewhere in this policy, no investigator may involve a human being as a subject in research covered by this policy unless the investigator has obtained the legally effective informed consent of the subject or the subject's legally authorized representative. An investigator shall seek such consent only under circumstances that provide the prospective subject or the representative sufficient opportunity to consider whether or not to participate and that minimize the possibility of coercion or undue influence. The information that is given to the subject or the representative shall be in language understandable to the subject or the representative. No informed

consent, whether oral or written, may include any exculpatory language through which the subject or the representative is made to waive or appear to waive any of the subject's legal rights, or releases or appears to release the investigator, the sponsor, the institution or its agents from liability for negligence.

(a) Basic elements of informed consent. Except as provided in paragraph (c) or (d) of this section, in seeking informed consent the following information shall be provided to each subject:

(1) A statement that the study involves research, an explanation of the purposes of the research and the expected duration of the subject's participation, a description of the procedures to be followed, and identification of any procedures which are experimental;

(2) A description of any reasonably foreseeable risks or discomforts to the subject;

(3) A description of any benefits to the subject or to others which may reasonably be expected from the research;

(4) A disclosure of appropriate alternative procedures or courses of treatment, if any, that might be advantageous to the subject;

(5) A statement describing the extent, if any, to which confidentiality of records identifying the subject will be maintained;

(6) For research involving more than minimal risk, an explanation as to whether any compensation and an explanation as to whether any medical treatments are available if injury occurs and, if so, what they consist of, or where further information may be obtained;

(7) An explanation of whom to contact for answers to pertinent questions about the research and research subjects' rights, and whom to contact in the event of a research-related injury to the subject; and

(8) A statement that participation is voluntary, refusal to participate will involve no penalty or loss of benefits to which the subject is otherwise entitled, and the subject may discontinue participation at any time without penalty or loss of benefits to which the subject is otherwise entitled.

(b) Additional elements of informed consent. When appropriate, one or more of the following elements of information shall also be provided to each subject:

(1) A statement that the particular treatment or procedure may involve risks to the subject (or to the embryo or fetus, if the subject is or may become pregnant) which are currently unforeseeable;

(2) Anticipated circumstances under which the subject's participation may be terminated by the investigator without regard to the subject's consent;

(3) Any additional costs to the subject that may result from participation in the research;

(4) The consequences of a subject's decision to withdraw from the research and procedures for orderly termination of participation by the subject;

(5) A statement that significant new findings developed during the course of the research which may relate to the subject's willingness to continue participation will be provided to the subject; and

(6) The approximate number of subjects involved in the study.

(c) An IRB may approve a consent procedure which does not include, or which alters, some or all of the elements of informed consent set forth above, or waive the requirement to obtain informed consent provided the IRB finds and documents that:

(1) The research or demonstration project is to be conducted by or subject to the approval of state or local government officials and is designed to study, evaluate, or otherwise examine: (i) public benefit of service programs; (ii) procedures for obtaining benefits or services under those programs; (iii) possible changes in or alternatives to those programs or procedures; or (iv) possible changes in methods or levels of payment for benefits or services under those programs; and

(2) The research could not practicably be carried out without the waiver or alteration.

(d) An IRB may approve a consent procedure which does not include, or which alters, some or all of the elements of informed consent set forth in this section, or waive the requirements

to obtain informed consent provided the IRB finds and documents that:

(1) The research involves no more than minimal risk to the subjects;

(2) The waiver or alteration will not adversely affect the rights and welfare of the subjects;

(3) The research could not practicably be carried out without the waiver or alteration; and

(4) Whenever appropriate, the subjects will be provided with additional pertinent information after participation.

(e) The informed consent requirements in this policy are not intended to preempt any applicable Federal, state, or local laws which require additional information to be disclosed in order for informed consent to be legally effective.

(f) Nothing in this policy is intended to limit the authority of a physician to provide emergency medical care, to the extent the physician is permitted to do so under applicable Federal, state, or local law.

(Approved by the Office of Management and Budget under control number 9999–0020)

§ 11.117 Documentation of informed consent.

(a) Except as provided in paragraph (c) of this section, informed consent shall be documented by the use of a written consent form approved by the IRB and signed by the subject or the subject's legally authorized representative. A copy shall be given to the person signing the form.

(b) Except as provided in paragraph (c) of this section, the consent form may be either of the following:

(1) A written consent document that embodies the elements of informed consent required by § 11.116. This form may be read to the subject or the subject's legally authorized representative, but in any event, the investigator shall give either the subject or the representative adequate opportunity to read it before it is signed; or

(2) A short form written consent document stating that the elements of informed consent required by § 11.116 have been presented orally to the subject or the subject's legally authorized representative. When this method is used, there shall be a witness to the oral presentation. Also, the IRB shall approve a written summary of what is to be said to the subject or the representative. Only the short form itself is to be signed by the subject or the representative. However, the witness shall sign both the short form and a copy of the summary, and the person actually obtaining consent shall sign a copy of the summary. A copy of the summary shall be given to the subject or the representative, in addition to a copy of the short form.

(c) An IRB may waive the requirement for the investigator to obtain a signed consent form for some or all subjects if it finds either:

(1) That the only record linking the subject and the research would be the consent document and the principal risk would be potential harm resulting from a breach of confidentiality. Each subject will be asked whether the subject wants documentation linking the subject with the research, and the subject's wishes will govern; or

(2) That the research presents no more than minimal risk of harm to subjects and involves no procedures for which written consent is normally required outside of the research context.

In cases in which the documentation requirement is waived, the IRB may require the investigator to provide subjects with a written statement regarding the research.

(Approved by the Office of Management and Budget under control number 9999–0020)

§ 11.118 Applications and proposals lacking definite plans for involvement of human subjects.

Certain types of applications for grants, cooperative agreements, or contracts are submitted to departments or agencies with the knowledge that subjects may be involved within the period of support, but definite plans would not normally be set forth in the application or proposal. These include activities such as institutional type grants when selection of specific projects is the institution's responsibility; research training grants in which the activities involving subjects remain to be selected; and projects in which human subjects' involvement will depend upon

completion of instruments, prior animal studies, or purification of compounds. These applications need not be reviewed by an IRB before an award may be made. However, except for research exempted or waived under § 11.101 (b) or (i), no human subjects may be involved in any project supported by these awards until the project has been reviewed and approved by the IRB, as provided in this policy, and certification submitted, by the institution, to the department or agency.

§ 11.119 Research undertaken without the intention of involving human subjects.

In the event research is undertaken without the intention of involving human subjects, but it is later proposed to involve human subjects in the research, the research shall first be reviewed and approved by an IRB, as provided in this policy, a certification submitted, by the institution, to the department or agency, and final approval given to the proposed change by the department or agency.

§ 11.120 Evaluation and disposition of applications and proposals for research to be conducted or supported by a Federal Department or Agency.

The department or agency head will evaluate all applications and proposals involving human subjects submitted to the department or agency through such officers and employees of the department or agency and such experts and consultants as the department or agency head determines to be appropriate. This evaluation will take into consideration the risks to the subjects, the adequacy of protection against these risks, the potential benefits of the research to the subjects and others, and the importance of the knowledge gained or to be gained.

(b) On the basis of this evaluation, the department or agency head may approve or disapprove the application or proposal, or enter into negotiations to develop an approvable one.

EDITORIAL NOTE: At 56 FR 28012, June 18, 1991, § 11.120 was added without a paragraph (a) designation.

§ 11.121 [Reserved]

§ 11.122 Use of Federal funds.

Federal funds administered by a department or agency may not be expended for research involving human subjects unless the requirements of this policy have been satisfied.

§ 11.123 Early termination of research support: Evaluation of applications and proposals.

(a) The department or agency head may require that department or agency support for any project be terminated or suspended in the manner prescribed in applicable program requirements, when the department or agency head finds an institution has materially failed to comply with the terms of this policy.

(b) In making decisions about supporting or approving applications or proposals covered by this policy the department or agency head may take into account, in addition to all other eligibility requirements and program criteria, factors such as whether the applicant has been subject to a termination or suspension under paragarph (a) of this section and whether the applicant or the person or persons who would direct or has/have directed the scientific and technical aspects of an activity has/have, in the judgment of the department or agency head, materially failed to discharge responsibility for the protection of the rights and welfare of human subjects (whether or not the research was subject to Federal regulation).

§ 11.124 Conditions.

With respect to any research project or any class of research projects the department or agency head may impose additional conditions prior to or at the time of approval when in the judgment of the department or agency head additional conditions are necessary for the protection of human subjects.

PART 17—INTERGOVERNMENTAL REVIEW OF DEPARTMENT OF TRANSPORTATION PROGRAMS AND ACTIVITIES

Sec.
17.1 What is the purpose of these regulations?
17.2 What definitions apply to these regulations?
17.3 What programs and activities of the Department are subject to these regulations?
17.4 [Reserved]
17.5 What is the Secretary's obligation with respect to Federal interagency coordination?
17.6 What procedures apply to the selection of programs and activities under these regulations?
17.7 How does the Secretary communicate with state and local officials concerning the Department's programs and activities?
17.8 How does the secretary provide states an opportunity to comment on proposed Federal financial assistance and direct Federal development?
17.9 How does the Secretary receive and respond to comments?
17.10 How does the Secretary make efforts to accommodate intergovernmental concerns?
17.11 What are the Secretary's obligations in interstate situations?
17.12 How may a state simplify, consolidate, or substitute federally required state plans?
17.13 May the Secretary waive any provision of these regulations?

AUTHORITY: Executive Order 12372, July 14, 1982 (47 FR 30959), as amended April 8, 1983 (48 FR 15887): sec. 401 of the Intergovernmental Cooperation Act of 1968, as amended (31 U.S.C. 6506); sec. 204 of the Demonstration Cities and Metropolitan Development Act of 1966, as amended (42 U.S.C. 3334).

SOURCE: 48 FR 29272, June 24, 1983, unless otherwise noted

§ 17.1 What is the purpose of these regulations?

(a) The regulations in this part implement Executive Order 12372, ''Intergovernmental Review of Federal Programs,'' issued July 14, 1982, and amended on April 8, 1983. These regulations also implement applicable provisions of section 401 of the Intergovernmental Cooperation Act of 1968 and section 204 of the Demonstration Cities and Metropolitan Development Act of 1966.

(b) These regulations are intended to foster an intergovernmental partnership and a strengthened Federalism by relying on state processes and on state, areawide, regional and local coordination for review of proposed Federal financial assistance and direct Federal development.

(c) These regulations are intended to aid the internal management of the Department, and are not intended to create any right or benefit enforceable at law by a party against the Department or its officers.

§ 17.2 What definitions apply to these regulations?

Department means the U.S. Department of Transportation.

Order means Executive Order 12372, issued July 14, 1982, and amended April 8, 1983, and titled ''Intergovernmental Review of Federal Programs.''

Secretary means the Secretary of the U.S. Department of Transportation or an official or employee of the Department acting for the Secretary under a delegation of authority.

State means any of the 50 states, the District of Columbia, the Commonwealth of Puerto Rico, the Commonwealth of the Northern Mariana Islands, Guam, American Samoa, the U.S. Virgin Islands, or the Trust Territory of the Pacific Islands.

§ 17.3 What programs and activities of the Department are subject to these regulations?

The Secretary publishes in the FEDERAL REGISTER a list of the Department's programs and activities that are subject to these regulations and identifies which of these are subject to the requirements of section 204 of the Demonstration Cities and Metropolitan Development Act.

§ 17.4 [Reserved]

§ 17.5 What is the Secretary's obligation with respect to Federal interagency coordination?

The Secretary, to the extent practicable, consults with and seeks advice from all other substantially affected Federal departments and agencies in

an effort to assure full coordination between such agencies and the Department regarding programs and activities covered under these regulations.

§ 17.6 What procedures apply to the selection of programs and activities under these regulations?

(a) A state may select any program or activity published in the FEDERAL REGISTER in accordance with § 17.3 of this part for intergovernmental review under these regulations. Each state, before selecting programs and activities shall consult with local elected officials.

(b) Each state that adopts a process shall notify the Secretary of the Department's programs and activities selected for that process.

(c) A state may notify the Secretary of changes in its selections at any time. For each change, the state shall submit to the Secretary an assurance that the state has consulted with elected local elected officials regarding the change. The Department may establish deadlines by which states are required to inform the Secretary of changes in their program selections.

(d) The Secretary uses a state's process as soon as feasible, depending on individual programs, and activities, after the Secretary is notified of its selections.

§ 17.7 How does the Secretary communicate with state and local officials concerning the Department's programs and activities?

(a) For those programs and activities covered by a state process under § 17.6, the Secretary, to the extent permitted by law:

(1) Uses the state process to determine views of state and local elected officials; and,

(2) Communicates with state and local elected officials, through the state process, as early in a program planning cycle as is reasonably feasible to explain specific plans and actions.

(b) The Secretary provides notice to directly affected state, areawide, regional, and local entities in a state of proposed Federal financial assistance or direct Federal development if:

(1) The state has not adopted a process under the Order; or

(2) The assistance or development involves a program or activity not selected for the state process.

This notice may be made by publication in the FEDERAL REGISTER or other appropriate means, which the Department in its discretion deems appropriate.

§ 17.8 How does the Secretary provide states an opportunity to comment on proposed Federal financial assistance and direct Federal development?

(a) Except in unusual circumstances, the Secretary gives state processes or state, areawide, regional and local officials and entities at least:

(1) [Reserved]

(2) 60 days from the date established by the Secretary to comment on proposed direct Federal development or Federal financial assistance.

(b) This section also applies to comments in cases in which the review, coordination, and communication with the Department have been delegated.

(c) Applicants for programs and activities subject to section 204 of the Demonstration Cities and Metropolitan Act shall allow areawide agencies a 60-day opportunity for review and comment.

§ 17.9 How does the Secretary receive and respond to comments?

(a) The Secretary follows the procedures in § 17.10 if:

(1) A state office or official is designated to act as a single point of contact between a state process and all federal agencies, and

(2) That office or official transmits a state process recommendation for a program selected under § 17.6.

(b)(1) The single point of contact is not obligated to transmit comments from state, areawide, regional or local officials and entities where there is no state process recommendation.

(2) If a state process recommendation is transmitted by a single point of contact, all comments from state, areawide, regional, and local officials and entities that differ from it must also be transmitted.

(c) If a state has not established a process, or is unable to submit a state process recommendation, state,

areawide, regional and local officials and entities may submit comments either to the applicant or to the Department.

(d) If a program or activity is not selected for a state process, state, areawide, regional and local officials and entities may submit comments either to the applicant or to the Department. In addition, if a state process recommendation for a nonselected program or activity is transmitted to the Department by the single point of contact, the Secretary follows the procedures of § 17.10 of this part.

(e) The Secretary considers comments which do not constitute a state process recommendation submitted under these regulations and for which the Secretary is not required to apply the procedures of § 17.10 of this part, when such comments are provided by a single point of contact, by the applicant, or directly to the Department by a commenting party.

§ 17.10 How does the Secretary make efforts to accommodate intergovernmental concerns?

(a) If a state process provides a state process recommendation to the Department through its single point of contact, the Secretary either:

(1) Accepts the recommendation;

(2) Reaches a mutually agreeable solution with the state process; or

(3) Provides the single point of contact with a written explanation of the decision, in such form as the Secretary in his or her discretion deems appropriate. The Secretary may also supplement the written explanation by providing the explanation to the single point of contact by telephone, other telecommunication, or other means.

(b) In any explanation under paragraph (a)(3) of this section, the Secretary informs the single point of contact that:

(1) The Department will not implement its decision for at least ten days after the single point of contact receives the explanation; or

(2) The Secretary has reviewed the decision and determined that, because of unusual circumstances, the waiting period of at least ten days is not feasible.

(c) For purposes of computing the waiting period under paragraph (b)(1) of this section, a single point of contact is presumed to have received written notification 5 days after the date of mailing of such notification.

§ 17.11 What are the Secretary's obligations in interstate situations?

(a) The Secretary is responsible for:

(1) Identifying proposed federal financial assistance and direct federal development that have an impact on interstate areas;

(2) Notifying appropriate officials and entities in states which have adopted a process and which select the Department's program or activity.

(3) Making efforts to identify and notify the affected state, areawide, regional, and local officials and entities in those states that have not adopted a process under the Order or do not select the Department's program or activity;

(4) Responding pursuant to § 17.10 of this part if the Secretary receives a recommendation from a designated areawide agency transmitted by a single point of contact, in cases in which the review, coordination, and communication with the Department have been delegated.

(b) The Secretary uses the procedures in § 17.10 if a state process provides a state process recommendation to the Department through a single point of contact.

§ 17.12 How may a state simplify, consolidate, or substitute federally required state plans?

(a) As used in this section:

(1) *Simplify* means that a state may develop its own format, choose its own submission date, and select the planning period for a state plan.

(2) *Consolidate* means that a state may meet statutory and regulatory requirements by combining two or more plans into one document and that the state can select the format, submission date, and planning period for the consolidated plan.

(3) *Substitute* means that a state may use a plan or other document that it has developed for its own purposes to meet Federal requirements.

(b) If not inconsistent with law, a state may decide to try to simplify, consolidate, or substitute federally required state plans without prior approval by the Secretary.

(c) The Secretary reviews each state plan that a state has simplified, consolidated, or substituted and accepts the plan only if its contents meet federal requirements.

§ 17.13 May the Secretary waive any provision of these regulations?

In an emergency, the Secretary may waive any provision of these regulations.

PART 18—UNIFORM ADMINISTRATIVE REQUIREMENTS FOR GRANTS AND COOPERATIVE AGREEMENTS TO STATE AND LOCAL GOVERNMENTS

Subpart A—General

Sec.
18.1 Purpose and scope of this part.
18.2 Scope of subpart.
18.3 Definitions.
18.4 Applicability.
18.5 Effect on other issuances.
18.6 Additions and exceptions.

Subpart B—Pre-Award Requirements

18.10 Forms for applying for grants.
18.11 State plans.
18.12 Special grant or subgrant conditions for ''high risk'' grantees.

Subpart C—Post-Award Requirements

FINANCIAL ADMINISTRATION

18.20 Standards for financial management systems.
18.21 Payment.
18.22 Allowable costs.
18.23 Period of availability of funds.
18.24 Matching or cost sharing.
18.25 Program income.
18.26 Non-Federal audits.

CHANGES, PROPERTY, AND SUBAWARDS

18.30 Changes.
18.31 Real property.
18.32 Equipment.
18.33 Supplies.
18.34 Copyrights.
18.35 Subawards to debarred and suspended parties.
18.36 Procurement.
18.37 Subgrants.

REPORTS, RECORDS, RETENTION, AND ENFORCEMENT

18.40 Monitoring and reporting program performance.
18.41 Financial reporting.
18.42 Retention and access requirements for records.
18.43 Enforcememt.
18.44 Termination for convenience.

Subpart D—After-the-Grant Requirements

18.50 Closeout.
18.51 Later disallowances and adjustments.
18.52 Collection of amounts due.

Subpart E—Entitlements [Reserved]

AUTHORITY: 49 U.S.C. 322(a).

SOURCE: 53 FR 8086 and 8087, Mar. 11, 1988, unless otherwise noted.

A—General

§ 18.1 Purpose and scope of this part.

This part establishes uniform administrative rules for Federal grants and cooperative agreements and subawards to State, local and Indian tribal governments.

§ 18.2 Scope of subpart.

This subpart contains general rules pertaining to this part and procedures for control of exceptions from this part.

§ 18.3 Definitions.

As used in this part:

Accrued expenditures mean the charges incurred by the grantee during a given period requiring the provision of funds for: (1) Goods and other tangible property received; (2) services performed by employees, contractors, subgrantees, subcontractors, and other payees; and (3) other amounts becoming owed under programs for which no current services or performance is required, such as annuities, insurance claims, and other benefit payments.

Accrued income means the sum of: (1) Earnings during a given period from services performed by the grantee and goods and other tangible property delivered to purchasers, and (2) amounts becoming owed to the grantee for which no current services or performance is required by the grantee.

Acquisition cost of an item of purchased equipment means the net invoice unit price of the property including the cost of modifications, attachments, accessories, or auxiliary apparatus necessary to make the property usable for the purpose for which it was acquired. Other charges such as the cost of installation, transportation, taxes, duty or protective in-transit insurance, shall be included or excluded from the unit acquisition cost in accordance with the grantee's regular accounting practices.

Administrative requirements mean those matters common to grants in general, such as financial management, kinds and frequency of reports, and retention of records. These are distinguished from ''programmatic'' requirements, which concern matters that can be treated only on a program-by-program or grant-by-grant basis, such as kinds of activities that can be supported by grants under a particular program.

Awarding agency means (1) with respect to a grant, the Federal agency, and (2) with respect to a subgrant, the party that awarded the subgrant.

Cash contributions means the grantee's cash outlay, including the outlay of money contributed to the grantee or subgrantee by other public agencies and institutions, and private organizations and individuals. When authorized by Federal legislation, Federal funds received from other assistance agreements may be considered as grantee or subgrantee cash contributions.

Contract means (except as used in the definitions for ''grant'' and ''subgrant'' in this section and except where qualified by ''Federal'') a procurement contract under a grant or subgrant, and means a procurement subcontract under a contract.

Cost sharing or matching means the value of the third party in-kind contributions and the portion of the costs of a federally assisted project or program not borne by the Federal Government.

Cost-type contract means a contract or subcontract under a grant in which the contractor or subcontractor is paid on the basis of the costs it incurs, with or without a fee.

Equipment means tangible, nonexpendable, personal property having a useful life of more than one year and an acquisition cost of $5,000 or more per unit. A grantee may use its own definition of equipment provided that such definition would at least include all equipment defined above.

Expenditure report means: (1) For nonconstruction grants, the SF–269 ''Financial Status Report'' (or other equivalent report); (2) for construction grants, the SF–271 ''Outlay Report and Request for Reimbursement'' (or other equivalent report).

Federally recognized Indian tribal government means the governing body or a governmental agency of any Indian tribe, band, nation, or other organized group or community (including any Native village as defined in section 3 of the Alaska Native Claims Settlement Act, 85 Stat 688) certified by the Secretary of the Interior as eligible for the special programs and services provided by him through the Bureau of Indian Affairs.

Government means a State or local government or a federally recognized Indian tribal government.

Grant means an award of financial assistance, including cooperative agreements, in the form of money, or property in lieu of money, by the Federal Government to an eligible grantee. The term does not include technical assistance which provides services instead of money, or other assistance in the form of revenue sharing, loans, loan guarantees, interest subsidies, insurance, or direct appropriations. Also, the term does not include assistance, such as a fellowship or other lump sum award, which the grantee is not required to account for.

Grantee means the government to which a grant is awarded and which is accountable for the use of the funds provided. The grantee is the entire legal entity even if only a particular component of the entity is designated in the grant award document.

Local government means a county, municipality, city, town, township, local public authority (including any public and Indian housing agency under the United States Housing Act of 1937) school district, special district,

intrastate district, council of governments (whether or not incorporated as a nonprofit corporation under state law), any other regional or interstate government entity, or any agency or instrumentality of a local government.

Obligations means the amounts of orders placed, contracts and subgrants awarded, goods and services received, and similar transactions during a given period that will require payment by the grantee during the same or a future period.

OMB means the United States Office of Management and Budget.

Outlays (expenditures) mean charges made to the project or program. They may be reported on a cash or accrual basis. For reports prepared on a cash basis, outlays are the sum of actual cash disbursement for direct charges for goods and services, the amount of indirect expense incurred, the value of in-kind contributions applied, and the amount of cash advances and payments made to contractors and subgrantees. For reports prepared on an accrued expenditure basis, outlays are the sum of actual cash disbursements, the amount of indirect expense incurred, the value of inkind contributions applied, and the new increase (or decrease) in the amounts owed by the grantee for goods and other property received, for services performed by employees, contractors, subgrantees, subcontractors, and other payees, and other amounts becoming owed under programs for which no current services or performance are required, such as annuities, insurance claims, and other benefit payments.

Percentage of completion method refers to a system under which payments are made for construction work according to the percentage of completion of the work, rather than to the grantee's cost incurred.

Prior approval means documentation evidencing consent prior to incurring specific cost.

Real property means land, including land improvements, structures and appurtenances thereto, excluding movable machinery and equipment.

Share, when referring to the awarding agency's portion of real property, equipment or supplies, means the same percentage as the awarding agency's portion of the acquiring party's total costs under the grant to which the acquisition costs under the grant to which the acquisition cost of the property was charged. Only costs are to be counted—not the value of third-party in-kind contributions.

State means any of the several States of the United States, the District of Columbia, the Commonwealth of Puerto Rico, any territory or possession of the United States, or any agency or instrumentality of a State exclusive of local governments. The term does not include any public and Indian housing agency under United States Housing Act of 1937.

Subgrant means an award of financial assistance in the form of money, or property in lieu of money, made under a grant by a grantee to an eligible subgrantee. The term includes financial assistance when provided by contractual legal agreement, but does not include procurement purchases, nor does it include any form of assistance which is excluded from the definition of ''grant'' in this part.

Subgrantee means the government or other legal entity to which a subgrant is awarded and which is accountable to the grantee for the use of the funds provided.

Supplies means all tangible personal property other than ''equipment'' as defined in this part.

Suspension means depending on the context, either (1) temporary withdrawal of the authority to obligate grant funds pending corrective action by the grantee or subgrantee or a decision to terminate the grant, or (2) an action taken by a suspending official in accordance with agency regulations implementing E.O. 12549 to immediately exclude a person from participating in grant transactions for a period, pending completion of an investigation and such legal or debarment proceedings as may ensue.

Termination means permanent withdrawal of the authority to obligate previously-awarded grant funds before that authority would otherwise expire. It also means the voluntary relinquishment of that authority by the grantee or subgrantee. ''Termination'' does not include: (1) Withdrawal of funds awarded on the basis of the grantee's underestimate of the unobligated balance in

a prior period; (2) Withdrawal of the unobligated balance as of the expiration of a grant; (3) Refusal to extend a grant or award additional funds, to make a competing or noncompeting continuation, renewal, extension, or supplemental award; or (4) voiding of a grant upon determination that the award was obtained fraudulently, or was otherwise illegal or invalid from inception.

Terms of a grant or subgrant mean all requirements of the grant or subgrant, whether in statute, regulations, or the award document.

Third party in-kind contributions mean property or services which benefit a federally assisted project or program and which are contributed by non-Federal third parties without charge to the grantee, or a cost-type contractor under the grant agreement.

Unliquidated obligations for reports prepared on a cash basis mean the amount of obligations incurred by the grantee that has not been paid. For reports prepared on an accrued expenditure basis, they represent the amount of obligations incurred by the grantee for which an outlay has not been recorded.

Unobligated balance means the portion of the funds authorized by the Federal agency that has not been obligated by the grantee and is determined by deducting the cumulative obligations from the cumulative funds authorized.

§ 18.4 Applicability.

(a) *General.* Subparts A through D of this part apply to all grants and subgrants to governments, except where inconsistent with Federal statutes or with regulations authorized in accordance with the exception provision of § 18.6, or:

(1) Grants and subgrants to State and local institutions of higher education or State and local hospitals.

(2) The block grants authorized by the Omnibus Budget Reconciliation Act of 1981 (Community Services; Preventive Health and Health Services; Alcohol, Drug Abuse, and Mental Health Services; Maternal and Child Health Services; Social Services; Low-Income Home Energy Assistance; States' Program of Community Development Block Grants for Small Cities; and Elementary and Secondary Education other than programs administered by the Secretary of Education under title V, subtitle D, chapter 2, Section 583—the Secretary's discretionary grant program) and titles I–III of the Job Training Partnership Act of 1982 and under the Public Health Services Act (Section 1921), Alcohol and Drug Abuse Treatment and Rehabilitation Block Grant and part C of title V, Mental Health Service for the Homeless Block Grant).

(3) Entitlement grants to carry out the following programs of the Social Security Act:

(i) Aid to Needy Families with Dependent Children (title IV–A of the Act, not including the Work Incentive Program (WIN) authorized by section 402(a)19(G); HHS grants for WIN are subject to this part);

(ii) Child Support Enforcement and Establishment of Paternity (title IV–D of the Act);

(iii) Foster Care and Adoption Assistance (title IV–E of the Act);

(iv) Aid to the Aged, Blind, and Disabled (titles I, X, XIV, and XVI–AABD of the Act); and

(v) Medical Assistance (Medicaid) (title XIX of the Act) not including the State Medicaid Fraud Control program authorized by section 1903(a)(6)(B).

(4) Entitlement grants under the following programs of The National School Lunch Act:

(i) School Lunch (section 4 of the Act),

(ii) Commodity Assistance (section 6 of the Act),

(iii) Special Meal Assistance (section 11 of the Act),

(iv) Summer Food Service for Children (section 13 of the Act), and

(v) Child Care Food Program (section 17 of the Act).

(5) Entitlement grants under the following programs of The Child Nutrition Act of 1966:

(i) Special Milk (section 3 of the Act), and

(ii) School Breakfast (section 4 of the Act).

(6) Entitlement grants for State Administrative expenses under The Food Stamp Act of 1977 (section 16 of the Act).

(7) A grant for an experimental, pilot, or demonstration project that is also supported by a grant listed in paragraph (a)(3) of this section;

(8) Grant funds awarded under subsection 412(e) of the Immigration and Nationality Act (8 U.S.C. 1522(e)) and subsection 501(a) of the Refugee Education Assistance Act of 1980 (Pub. L. 96–422, 94 Stat. 1809), for cash assistance, medical assistance, and supplemental security income benefits to refugees and entrants and the administrative costs of providing the assistance and benefits;

(9) Grants to local education agencies under 20 U.S.C. 236 through 241–1(a), and 242 through 244 (portions of the Impact Aid program), except for 20 U.S.C. 238(d)(2)(c) and 240(f) (Entitlement Increase for Handicapped Children); and

(10) Payments under the Veterans Administration's State Home Per Diem Program (38 U.S.C. 641(a)).

(b) *Entitlement programs.* Entitlement programs enumerated above in § 18.4(a)(3) through (8) are subject to subpart E.

§ 18.5 Effect on other issuances.

All other grants administration provisions of codified program regulations, program manuals, handbooks and other nonregulatory materials which are inconsistent with this part are superseded, except to the extent they are required by statute, or authorized in accordance with the exception provision in § 18.6.

§ 18.6 Additions and exceptions.

(a) For classes of grants and grantees subject to this part, Federal agencies may not impose additional administrative requirements except in codified regulations published in the FEDERAL REGISTER.

(b) Exceptions for classes of grants or grantees may be authorized only by OMB.

(1) All Departmental requests for exceptions shall be processed through the Assistant Secretary of Administration.

(2) [Reserved]

(c) Exceptions on a case-by-case basis and for subgrantees may be authorized by the affected Federal agencies.

(1) All case-by-case exceptions may be authorized by the affected operating administrations or departmental offices, with the concurrence of the Assistant Secretary for Administration.

(2) [Reserved]

[53 FR 8086 and 8087, Mar. 11, 1988, as amended at 60 FR 19646, Apr. 19, 1995]

Subpart B—Pre-Award Requirements

§ 18.10 Forms for applying for grants.

(a) *Scope.* (1) This section prescribes forms and instructions to be used by governmental organizations (except hospitals and institutions of higher education operated by a government) in applying for grants. This section is not applicable, however, to formula grant programs which do not require applicants to apply for funds on a project basis.

(2) This section applies only to applications to Federal agencies for grants, and is not required to be applied by grantees in dealing with applicants for subgrants. However, grantees are encouraged to avoid more detailed or burdensome application requirements for subgrants.

(3) Forms and procedures for Federal Highway Administration (FHWA) projects are contained in 23 CFR part 630, subpart B, 23 CFR part 420, subpart A, and 49 CFR part 450.

(b) *Authorized forms and instructions for governmental organizations.* (1) In applying for grants, applicants shall only use standard application forms or those prescribed by the granting agency with the approval of OMB under the Paperwork Reduction Act of 1980.

(2) Applicants are not required to submit more than the original and two copies of preapplications or applications.

(3) Applicants must follow all applicable instructions that bear OMB clearance numbers. Federal agencies may specify and describe the programs, functions, or activities that will be used to plan, budget, and evaluate the work under a grant. Other supplementary instructions may be issued only with the approval of OMB to the extent required under the Paperwork Reduction Act of 1980. For any standard form, except the SF–424 facesheet,

Federal agencies may shade out or instruct the applicant to disregard any line item that is not needed.

(4) When a grantee applies for additional funding (such as a continuation or supplemental award) or amends a previously submitted application, only the affected pages need be submitted. Previously submitted pages with information that is still current need not be resubmitted.

[53 FR 8086 and 8087, Mar. 11, 1988, as amended at 53 FR 8086, Mar. 11, 1988]

§ 18.11 State plans.

(a) *Scope.* The statutes for some programs require States to submit plans before receiving grants. Under regulations implementing Executive Order 12372, ''Intergovernmental Review of Federal Programs,'' States are allowed to simplify, consolidate and substitute plans. This section contains additional provisions for plans that are subject to regulations implementing the Executive order.

(b) *Requirements.* A State need meet only Federal administrative or programmatic requirements for a plan that are in statutes or codified regulations.

(c) *Assurances.* In each plan the State will include an assurance that the State shall comply with all applicable Federal statutes and regulations in effect with respect to the periods for which it receives grant funding. For this assurance and other assurances required in the plan, the State may:

(1) Cite by number the statutory or regulatory provisions requiring the assurances and affirm that it gives the assurances required by those provisions,

(2) Repeat the assurance language in the statutes or regulations, or

(3) Develop its own language to the extent permitted by law.

(d) *Amendments.* A State will amend a plan whenever necessary to reflect: (1) New or revised Federal statutes or regulations or (2) a material change in any State law, organization, policy, or State agency operation. The State will obtain approval for the amendment and its effective date but need submit for approval only the amended portions of the plan.

§ 18.12 Special grant or subgrant conditions for "high-risk" grantees.

(a) A grantee or subgrantee may be considered ''high risk'' if an awarding agency determines that a grantee or subgrantee:

(1) Has a history of unsatisfactory performance, or

(2) Is not financially stable, or

(3) Has a management system which does not meet the management standards set forth in this part, or

(4) Has not conformed to terms and conditions of previous awards, or

(5) Is otherwise not responsible; and if the awarding agency determines that an award will be made, special conditions and/or restrictions shall correspond to the high risk condition and shall be included in the award.

(b) Special conditions or restrictions may include:

(1) Payment on a reimbursement basis;

(2) Withholding authority to proceed to the next phase until receipt of evidence of acceptable performance within a given funding period;

(3) Requiring additional, more detailed financial reports;

(4) Additional project monitoring;

(5) Requiring the grante or subgrantee to obtain technical or management assistance; or

(6) Establishing additional prior approvals.

(c) If an awarding agency decides to impose such conditions, the awarding official will notify the grantee or subgrantee as early as possible, in writing, of:

(1) The nature of the special conditions/restrictions;

(2) The reason(s) for imposing them;

(3) The corrective actions which must be taken before they will be removed and the time allowed for completing the corrective actions; and

(4) The method of requesting reconsideration of the conditions/restrictions imposed.

Subpart C—Post-Award Requirements

FINANCIAL ADMINISTRATION

§ 18.20 Standards for financial management systems.

(a) A State must expand and account for grant funds in accordance with State laws and procedures for expending and accounting for its own funds. Fiscal control and accounting procedures of the State, as well as its subgrantees and cost-type contractors, must be sufficient to—

(1) Permit preparation of reports required by this part and the statutes authorizing the grant, and

(2) Permit the tracing of funds to a level of expenditures adequate to establish that such funds have not been used in violation of the restrictions and prohibitions of applicable statutes.

(b) The financial management systems of other grantees and subgrantees must meet the following standards:

(1) *Financial reporting.* Accurate, current, and complete disclosure of the financial results of financially assisted activities must be made in accordance with the financial reporting requirements of the grant or subgrant.

(2) *Accounting records.* Grantees and subgrantees must maintain records which adequately identify the source and application of funds provided for financially-assisted activities. These records must contain information pertaining to grant or subgrant awards and authorizations, obligations, unobligated balances, assets, liabilities, outlays or expenditures, and income.

(3) *Internal control.* Effective control and accountability must be maintained for all grant and subgrant cash, real and personal property, and other assets. Grantees and subgrantees must adequately safeguard all such property and must assure that it is used solely for authorized purposes.

(4) *Budget control.* Actual expenditures or outlays must be compared with budgeted amounts for each grant or subgrant. Financial information must be related to performance or productivity data, including the development of unit cost information whenever appropriate or specifically required in the grant or subgrant agreement. If unit cost data are required, estimates based on available documentation will be accepted whenever possible.

(5) *Allowable cost.* Applicable OMB cost principles, agency program regulations, and the terms of grant and subgrant agreements will be followed in determining the reasonableness, allowability, and allocability of costs.

(6) *Source documentation.* Accounting records must be supported by such source documentation as cancelled checks, paid bills, payrolls, time and attendance records, contract and subgrant award documents, etc.

(7) *Cash management.* Procedures for minimizing the time elapsing between the transfer of funds from the U.S. Treasury and disbursement by grantees and subgrantees must be followed whenever advance payment procedures are used. Grantees must establish reasonable procedures to ensure the receipt of reports on subgrantees' cash balances and cash disbursements in sufficient time to enable them to prepare complete and accurate cash transactions reports to the awarding agency. When advances are made by letter-of-credit or electronic transfer of funds methods, the grantee must make drawdowns as close as possible to the time of making disbursements. Grantees must monitor cash drawdowns by their subgrantees to assure that they conform substantially to the same standards of timing and amount as apply to advances to the grantees.

(c) An awarding agency may review the adequacy of the financial management system of any applicant for financial assistance as part of a preaward review or at any time subsequent to award.

(d) Certain Urban Mass Transportation Administration (UMTA) grantees shall comply with the requirements of section 15 of the Urban Mass Transportation (UMT) Act of 1964, as amended, as implemented by 49 CFR part 630, regarding a uniform system of accounts and records and a uniform reporting system for certain grantees.

[53 FR 8086 and 8087, Mar. 11, 1988, as amended at 53 FR 8086, Mar. 11, 1988]

§ 18.21 Payment.

(a) *Scope.* This section prescribes the basic standard and the methods under which a Federal agency will make payments to grantees, and grantees will make payments to subgrantees and contractors.

(b) *Basic standard.* Methods and procedures for payment shall minimize the time elapsing between the transfer of funds and disbursement by the grantee or subgrantee, in accordance with Treasury regulations at 31 CFR part 205.

(c) *Advances.* Grantees and subgrantees shall be paid in advance, provided they maintain or demonstrate the willingness and ability to maintain procedures to minimize the time elapsing between the transfer of the funds and their disbursement by the grantee or subgrantee.

(d) *Reimbursement.* Reimbursement shall be the preferred method when the requirements in paragraph (c) of this section are not met. Grantees and subgrantees may also be paid by reimbursement for any construction grant. Except as otherwise specified in regulation, Federal agencies shall not use the percentage of completion method to pay construction grants. The grantee or subgrantee may use that method to pay its construction contractor, and if it does, the awarding agency's payments to the grantee or subgrantee will be based on the grantee's or subgrantee's actual rate of disbursement.

(e) *Working capital advances.* If a grantee cannot meet the criteria for advance payments described in paragraph (c) of this section, and the Federal agency has determined that reimbursement is not feasible because the grantee lacks sufficient working capital, the awarding agency may provide cash or a working capital advance basis. Under this procedure the awarding agency shall advance cash to the grantee to cover its estimated disbursement needs for an initial period generally geared to the grantee's disbursing cycle. Thereafter, the awarding agency shall reimburse the grantee for its actual cash disbursements. The working capital advance method of payment shall not be used by grantees or subgrantees if the reason for using such method is the unwillingness or inability of the grantee to provide timely advances to the subgrantee to meet the subgrantee's actual cash disbursements.

(f) *Effect of program income, refunds, and audit recoveries on payment.* (1) Grantees and subgrantees shall disburse repayments to and interest earned on a revolving fund before requesting additional cash payments for the same activity.

(2) Except as provided in paragraph (f)(1) of this section, grantees and subgrantees shall disburse program income, rebates, refunds, contract settlements, audit recoveries and interest earned on such funds before requesting additional cash payments.

(g) *Withholding payments.* (1) Unless otherwise required by Federal statute, awarding agencies shall not withhold payments for proper charges incurred by grantees or subgrantees unless—

(i) The grantee or subgrantee has failed to comply with grant award conditions or

(ii) The grantee or subgrantee is indebted to the United States.

(2) Cash withheld for failure to comply with grant award condition, but without suspension of the grant, shall be released to the grantee upon subsequent compliance. When a grant is suspended, payment adjustments will be made in accordance with § 18.43(c).

(3) A Federal agency shall not make payment to grantees for amounts that are withheld by grantees or subgrantees from payment to contractors to assure satisfactory completion of work. Payments shall be made by the Federal agency when the grantees or subgrantees actually disburse the withheld funds to the contractors or to escrow accounts established to assure satisfactory completion of work.

(h) *Cash depositories.* (1) Consistent with the national goal of expanding the opportunities for minority business enterprises, grantees and subgrantees are encouraged to use minority banks (a bank which is owned at least 50 percent by minority group members). A list of minority owned banks can be obtained from the Minority Business Development Agency, Department of Commerce, Washington, DC 20230.

(2) A grantee or subgrantee shall maintain a separate bank account only

when required by Federal-State agreement.

(i) *Interest earned on advances.* Except for interest earned on advances of funds exempt under the Intergovernmental Cooperation Act (31 U.S.C. 6501 et seq.) and the Indian Self-Determination Act (23 U.S.C. 450), grantees and subgrantees shall promptly, but at least quarterly, remit interest earned on advances to the Federal agency. The grantee or subgrantee may keep interest amounts up to $100 per year for administrative expenses.

(j) 23 U.S.C. 121 limits payments to States for highway construction projects to the Federal share of the costs of construction incurred to date, plus the Federal share of the value of stockpiled materials.

(k) Section 404 of the Surface Transportation Assistance Act of 1982 directs the Secretary to reimburse States for the Federal share of costs incurred.

[53 FR 8086 and 8087, Mar. 11, 1988, as amended at 53 FR 8086, Mar. 11, 1988]

§ 18.22 Allowable costs.

(a) *Limitation on use of funds.* Grant funds may be used only for:

(1) The allowable costs of the grantees, subgrantees and cost-type contractors, including allowable costs in the form of payments to fixed-price contractors; and

(2) Reasonable fees or profit to cost-type contractors but not any fee or profit (or other increment above allowable costs) to the grantee or subgrantee.

(b) *Applicable cost principles.* For each kind of organization, there is a set of Federal principles for determining allowable costs. Allowable costs will be determined in accordance with the cost principles applicable to the organization incurring the costs. The following chart lists the kinds of organizations and the applicable cost principles.

For the costs of a—	Use the principles in—
State, local or Indian tribal government.	OMB Circular A–87.
Private nonprofit organization other than an (1) institution of higher education, (2) hospital, or (3) organization named in OMB Circular A–122 as not subject to that circular.	OMB Circular A–122.
Educational institutions.	OMB Circular A–21.
For-profit organization other than a hospital and an organization named in OBM Circular A–122 as not subject to that circular.	48 CFR part 31. Contract Cost Principles and Procedures, or uniform cost accounting standards that comply with cost principles acceptable to the Federal agency.

(c) The overhead cost principles of OMB Circular A–87 shall not apply to State highway agencies for FHWA funded grants.

(d) Sections 3(1) and 9(p) of the UMT Act of 1964, as amended, authorize the Secretary to include in the net project cost eligible for Federal assistance, the amount of interest earned and payable on bonds issued by the State or local public body to the extent that the proceeds of such bonds have actually been expended in carrying out such project or portion thereof. Limitations are established in sections 3 and 9 of the UMT Act of 1964, as amended.

(e) Section 9 of the UMT Act of 1964, as amended, authorizes grants to finance the leasing of facilities and equipment for use in mass transportation services provided leasing is more cost effective than acquisition or construction.

[53 FR 8086 and 8087, Mar. 11, 1988, as amended at 53 FR 8086, Mar. 11, 1988]

§ 18.23 Period of availability of funds.

(a) *General.* Where a funding period is specified, a grantee may charge to the award only costs resulting from obligations of the funding period unless carryover of unobligated balances is permitted, in which case the carryover balances may be charged for costs resulting from obligations of the subsequent funding period.

(b) *Liquidation of obligations.* A grantee must liquidate all obligations incurred under the award not later than 90 days after the end of the funding period (or as specified in a program regulation) to coincide with the submission of the annual Financial Status Report (SF–269). The Federal agency may extend this deadline at the request of the grantee.

§ 18.24 Matching or cost sharing.

(a) *Basic rule: Costs and contributions acceptable.* With the qualifications and

exceptions listed in paragraph (b) of this section, a matching or cost sharing requirement may be satisfied by either or both of the following:

(1) Allowable costs incurred by the grantee, subgrantee or a cost-type contractor under the assistance agreement. This includes allowable costs borne by non-Federal grants or by others cash donations from non-Federal third parties.

(2) The value of third party in-kind contributions applicable to the period to which the cost sharing or matching requirements applies.

(b) *Qualifications and exceptions*—(1) *Costs borne by other Federal grant agreements.* Except as provided by Federal statute, a cost sharing or matching requirement may not be met by costs borne by another Federal grant. This prohibition does not apply to income earned by a grantee or subgrantee from a contract awarded under another Federal grant.

(2) *General revenue sharing.* For the purpose of this section, general revenue sharing funds distributed under 31 U.S.C. 6702 are not considered Federal grant funds.

(3) *Cost or contributions counted towards other Federal costs-sharing requirements.* Neither costs nor the values of third party in-kind contributions may count towards satisfying a cost sharing or matching requirement of a grant agreement if they have been or will be counted towards satisfying a cost sharing or matching requirement of another Federal grant agreement, a Federal procurement contract, or any other award of Federal funds.

(4) *Costs financed by program income.* Costs financed by program income, as defined in § 18.25, shall not count towards satisfying a cost sharing or matching requirement unless they are expressly permitted in the terms of the assistance agreement. (This use of general program income is described in § 18.25(g).)

(5) *Services or property financed by income earned by contractors.* Contractors under a grant may earn income from the activities carried out under the contract in addition to the amounts earned from the party awarding the contract. No costs of services or property supported by this income may count toward satisfying a cost sharing or matching requirement unless other provisions of the grant agreement expressly permit this kind of income to be used to meet the requirement.

(6) *Records.* Costs and third party in-kind contributions counting towards satisfying a cost sharing or matching requirement must be verifiable from the records of grantees and subgrantee or cost-type contractors. These records must show how the value placed on third party in-kind contributions was derived. To the extent feasible, volunteer services will be supported by the same methods that the organization uses to support the allocability of regular personnel costs.

(7) *Special standards for third party in-kind contributions.* (i) Third party in-kind contributions count towards satisfying a cost sharing or matching requirement only where, if the party receiving the contributions were to pay for them, the payments would be allowable costs.

(ii) Some third party in-kind contributions are goods and services that, if the grantee, subgrantee, or contractor receiving the contribution had to pay for them, the payments would have been an indirect costs. Costs sharing or matching credit for such contributions shall be given only if the grantee, subgrantee, or contractor has established, along with its regular indirect cost rate, a special rate for allocating to individual projects or programs the value of the contributions.

(iii) A third party in-kind contribution to a fixed-price contract may count towards satisfying a cost sharing or matching requirement only if it results in:

(A) An increase in the services or property provided under the contract (without additional cost to the grantee or subgrantee) or

(B) A cost savings to the grantee or subgrantee.

(iv) The values placed on third party in-kind contributions for cost sharing or matching purposes will conform to the rules in the succeeding sections of this part. If a third party in-kind contribution is a type not treated in those sections, the value placed upon it shall be fair and reasonable.

(8) 23 U.S.C. 121(a) permits reimbursement for actual construction cost incurred by States for highway construction projects. Except for private donations of right-of-way, contributions and donations shall not be considered State costs, and shall not be allowable for matching purposes for highway construction contracts. 23 U.S.C. 323 permits private donations of right-of-way to be used for a State's matching share, and establishes procedures for determining the fair market value of such donated right-of-way.

(9) Section 4(a) of the UMT Act of 1964, as amended, provides that the Federal grant for any project to be assisted under section 3 of the UMT Act of 1964, as amended, shall be in an amount equal to 75 percent of the net project costs. Net project cost is defined as that portion of the cost of the project which cannot be reasonably financed from revenues.

(10) Section 18(e) of the UMT Act of 1964, as amended, limits the Federal share to 80 percent of the net cost of construction, as determined by the Secretary of Transportation. The Federal share for the payment of subsidies for operating expenses, as defined by the Secretary, shall not exceed 50 percent of the net cost of such operating expense projects.

(c) *Valuation of donated services*—(1) *Volunteer services.* Unpaid services provided to a grantee or subgrantee by individuals will be valued at rates consistent with those ordinarily paid for similar work in the grantee's or subgrantee's organization. If the grantee or subgrantee does not have employees performing similar work, the rates will be consistent with those ordinarily paid by other employers for similar work in the same labor market. In either case, a reasonable amount for fringe benefits may be included in the valuation.

(2) *Employees of other organizations.* When an employer other than a grantee, subgrantee, or cost-type contractor furnishes free of charge the services of an employee in the employee's normal line of work, the services will be valued at the employee's regular rate of pay exclusive of the employee's fringe benefits and overhead costs. If the services are in a different line of work, paragraph (c)(1) of this section applies.

(3) Section 5(g) of the Department of Transportation Act (49 U.S.C. 1654(g)) limits in-kind service contributions under the local Rail Service Assistance Program to ''the cash equivalent of State salaries for State public employees working in the State rail assistance program, but not including overhead and general administrative costs.''

(d) *Valuation of third party donated supplies and loaned equipment or space.* (1) If a third party donates supplies, the contribution will be valued at the market value of the supplies at the time of donation.

(2) If a third party donates the use of equipment or space in a building but retains title, the contribution will be valued at the fair rental rate of the equipment or space.

(e) *Valuation of third party donated equipment, buildings, and land.* If a third party donates equipment, buildings, or land, and title passes to a grantee or subgrantee, the treatment of the donated property will depend upon the purpose of the grant or subgrant, as follows:

(1) *Awards for capital expenditures.* If the purpose of the grant or subgrant is to assist the grantee or subgrantee in the acquisition of property, the market value of that property at the time of donation may be counted as cost sharing or matching,

(2) *Other awards.* If assisting in the acquisition of property is not the purpose of the grant or subgrant, paragraphs (e)(2) (i) and (ii) of this section apply:

(i) If approval is obtained from the awarding agency, the market value at the time of donation of the donated equipment or buildings and the fair rental rate of the donated land may be counted as cost sharing or matching. In the case of a subgrant, the terms of the grant agreement may require that the approval be obtained from the Federal agency as well as the grantee. In all cases, the approval may be given only if a purchase of the equipment or rental of the land would be approved as an allowable direct cost. If any part of the donated property was acquired

with Federal funds, only the non-federal share of the property may be counted as cost-sharing or matching.

(ii) If approval is not obtained under paragraph (e)(2)(i) of this section, no amount may be counted for donated land, and only depreciation or use allowances may be counted for donated equipment and buildings. The depreciation or use allowances for this property are not treated as third party in-kind contributions. Instead, they are treated as costs incurred by the grantee or subgrantee. They are computed and allocated (usually as indirect costs) in accordance with the cost principles specified in § 18.22, in the same way as depreciation or use allowances for purchased equipment and buildings. The amount of depreciation or use allowances for donated equipment and buildings is based on the property's market value at the time it was donated.

(f) *Valuation of grantee or subgrantee donated real property for construction/acquisition.* If a grantee or subgrantee donates real property for a construction or facilities acquisition project, the current market value of that property may be counted as cost sharing or matching. If any part of the donated property was acquired with Federal funds, only the non-federal share of the property may be counted as cost sharing or matching.

(g) *Appraisal of real property.* In some cases under paragraphs (d), (e) and (f) of this section, it will be necessary to establish the market value of land or a building or the fair rental rate of land or of space in a building. In these cases, the Federal agency may require the market value or fair rental value be set by an independent appraiser, and that the value or rate be certified by the grantee. This requirement will also be imposed by the grantee on subgrantees.

[53 FR 8086 and 8087, Mar. 11, 1988, as amended at 53 FR 8086, Mar. 11, 1988]

§ 18.25 Program income.

(a) *General.* Grantees are encouraged to earn income to defray program costs. Program income includes income from fees for services performed, from the use or rental of real or personal property acquired with grant funds, from the sale of commodities or items fabricated under a grant agreement, and from payments of principal and interest on loans made with grant funds. Except as otherwise provided in regulations of the Federal agency, program income does not include interest on grant funds, rebates, credits, discounts, refunds, etc. and interest earned on any of them.

(b) *Definition of program income.* Program income means gross income received by the grantee or subgrantee directly generated by a grant supported activity, or earned only as a result of the grant agreement during the grant period. ''During the grant period'' is the time between the effective date of the award and the ending date of the award reflected in the final financial report.

(c) *Cost of generating program income.* If authorized by Federal regulations or the grant agreement, costs incident to the generation of program income may be deducted from gross income to determine program income.

(d) *Governmental revenues.* Taxes, special assessments, levies, fines, and other such revenues raised by a grantee or subgrantee are not program income unless the revenues are specifically identified in the grant agreement or Federal agency regulations as program income.

(e) *Royalties.* Income from royalties and license fees for copyrighted material, patents, and inventions developed by a grantee or subgrantee is program income only if the revenues are specifically identified in the grant agreement or Federal agency regulations as program income. (See § 18.34.)

(f) *Property.* Proceeds from the sale of real property or equipment will be handled in accordance with the requirements of §§ 18.31 and 18.32.

(g) *Use of program income.* Program income shall be deducted from outlays which may be both Federal and non-Federal as described below, unless the Federal agency regulations or the grant agreement specify another alternative (or a combination of the alternatives). In specifying alternatives, the Federal agency may distinguish between income earned by the grantee and income earned by subgrantees and between the sources, kinds, or amounts of income. When Federal agencies authorize the alternatives in paragraphs

(g) (2) and (3) of this section, program income in excess of any limits stipulated shall also be deducted from outlays.

(1) *Deduction.* Ordinarily program income shall be deducted from total allowable costs to determine the net allowable costs. Program income shall be used for current costs unless the Federal agency authorizes otherwise. Program income which the grantee did not anticipate at the time of the award shall be used to reduce the Federal agency and grantee contributions rather than to increase the funds committed to the project.

(2) *Addition.* When authorized, program income may be added to the funds committed to the grant agreement by the Federal agency and the grantee. The program income shall be used for the purposes and under the conditions of the grant agreement.

(3) *Cost sharing or matching.* When authorized, program income may be used to meet the cost sharing or matching requirement of the grant agreement. The amount of the Federal grant award remains the same.

(4) Section 3(a)(1)(D) of the UMT Act of 1964, as amended, provides that the Secretary shall establish requirements for the use of income derived from appreciated land values for certain UMTA grants. Specific requirements shall be contained in grant agreements.

(5) UMTA grantees may retain program income for allowable capital or operating expenses.

(6) For grants awarded under section 9 of the UMT Act of 1964, as amended, any revenues received from the sale of advertising and concessions in excess of fiscal year 1985 levels shall be excluded from program income.

(7) 23 U.S.C. 156 requires that States shall charge fair market value for the sale, lease, or use of right-of-way airspace for non-transportation purposes and that such income shall be used for projects eligible under 23 U.S.C.

(h) *Income after the award period.* There are no Federal requirements governing the disposition of program income earned after the end of the award period (i.e., until the ending date of the final financial report, see paragraph (a) of this section), unless the terms of the agreement or the Federal agency regulations provide otherwise.

[53 FR 8086 and 8087, Mar. 11, 1988, as amended at 53 FR 8087, Mar. 11, 1988]

§ 18.26 Non-Federal audits.

(a) *Basic rule.* Grantees and subgrantees are responsible for obtaining audits in accordance with the Single Audit Act Amendments of 1996 (31 U.S.C. 7501–7507) and revised OMB Circular A–133, ''Audits of States, Local Governments, and Non-Profit Organizations.'' The audits shall be made by an independent auditor in accordance with generally accepted government auditing standards covering financial audits.

(b) *Subgrantees.* State or local governments, as those terms are defined for purposes of the Single Audit Act Amendments of 1996, that provide Federal awards to a subgrantee, which expends $300,000 or more (or other amount as specified by OMB) in Federal awards in a fiscal year, shall:

(1) Determine whether State or local subgrantees have met the audit requirements of the Act and whether subgrantees covered by OMB Circular A–110, ''Uniform Administrative Requirements for Grants and Agreements with Institutions of Higher Education, Hospitals, and Other Non-Profit Organizations,'' have met the audit requirements of the Act. Commercial contractors (private for-profit and private and governmental organizations) providing goods and services to State and local governments are not required to have a single audit performed. State and local governments should use their own procedures to ensure that the contractor has complied with laws and regulations affecting the expenditure of Federal funds;

(2) Determine whether the subgrantee spent Federal assistance funds provided in accordance with applicable laws and regulations. This may be accomplished by reviewing an audit of the subgrantee made in accordance with the Act, Circular A–110, or through other means (e.g., program reviews) if the subgrantee has not had such an audit;

(3) Ensure that appropriate corrective action is taken within six months

after receipt of the audit report in instance of noncompliance with Federal laws and regulations;

(4) Consider whether subgrantee audits necessitate adjustment of the grantee's own records; and

(5) Require each subgrantee to permit independent auditors to have access to the records and financial statements.

(c) *Auditor selection.* In arranging for audit services, § 18.36 shall be followed.

[53 FR 8086 and 8087, Mar. 11, 1988, as amended at 61 FR 21387, May 10, 1996; 62 FR 45939, 45947, Aug. 29, 1997]

CHANGES, PROPERTY, AND SUBAWARDS

§ 18.30 Changes.

(a) *General.* Grantees and subgrantees are permitted to rebudget within the approved direct cost budget to meet unanticipated requirements and may make limited program changes to the approved project. However, unless waived by the awarding agency, certain types of post-award changes in budgets and projects shall require the prior written approval of the awarding agency.

(b) *Relation to cost principles.* The applicable cost principles (see § 18.22) contain requirements for prior approval of certain types of costs. Except where waived, those requirements apply to all grants and subgrants even if paragraphs (c) through (f) of this section do not.

(c) *Budget changes*—(1) *Nonconstruction projects.* Except as stated in other regulations or an award document, grantees or subgrantees shall obtain the prior approval of the awarding agency whenever any of the following changes is anticipated under a nonconstruction award:

(i) Any revision which would result in the need for additional funding.

(ii) Unless waived by the awarding agency, cumulative transfers among direct cost categories, or, if applicable, among separately budgeted programs, projects, functions, or activities which exceed or are expected to exceed ten percent of the current total approved budget, whenever the awarding agency's share exceeds $100,000.

(iii) Transfer of funds allotted for training allowances (i.e., from direct payments to trainees to other expense categories).

(2) *Construction projects.* Grantees and subgrantees shall obtain prior written approval for any budget revision which would result in the need for additional funds.

(3) *Combined construction and nonconstruction projects.* When a grant or subgrant provides funding for both construction and nonconstruction activities, the grantee or subgrantee must obtain prior written approval from the awarding agency before making any fund or budget transfer from nonconstruction to construction or vice versa.

(d) *Programmatic changes.* Grantees or subgrantees must obtain the prior approval of the awarding agency whenever any of the following actions is anticipated:

(1) Any revision of the scope or objectives of the project (regardless of whether there is an associated budget revision requiring prior approval).

(2) Need to extend the period of availability of funds.

(3) Changes in key persons in cases where specified in an application or a grant award. In research projects, a change in the project director or principal investigator shall always require approval unless waived by the awarding agency.

(4) Under nonconstruction projects, contracting out, subgranting (if authorized by law) or otherwise obtaining the services of a third party to perform activities which are central to the purposes of the award. This approval requirement is in addition to the approval requirements of § 18.36 but does not apply to the procurement of equipment, supplies, and general support services.

(e) *Additional prior approval requirements.* The awarding agency may not require prior approval for any budget revision which is not described in paragraph (c) of this section.

(f) *Requesting prior approval.* (1) A request for prior approval of any budget revision will be in the same budget formal the grantee used in its application and shall be accompanied by a narrative justification for the proposed revision.

(2) A request for a prior approval under the applicable Federal cost principles (see § 18.22) may be made by letter.

(3) A request by a subgrantee for prior approval will be addressed in writing to the grantee. The grantee will promptly review such request and shall approve or disapprove the request in writing. A grantee will not approve any budget or project revision which is inconsistent with the purpose or terms and conditions of the Federal grant to the grantee. If the revision, requested by the subgrantee would result in a change to the grantee's approved project which requires Federal prior approval, the grantee will obtain the Federal agency's approval before approving the subgrantee's request.

§ 18.31 Real property.

(a) *Title.* Subject to the obligations and conditions set forth in this section, title to real property acquired under a grant or subgrant will vest upon acquisition in the grantee or subgrantee respectively.

(b) *Use.* Except as otherwise provided by Federal statutes, real property will be used for the originally authorized purposes as long as needed for that purposes, and the grantee or subgrantee shall not dispose of or encumber its title or other interests.

(c) *Disposition.* When real property is no longer needed for the originally authorized purpose, the grantee or subgrantee will request disposition instructions from the awarding agency. The instructions will provide for one of the following alternatives:

(1) *Retention of title.* Retain title after compensating the awarding agency. The amount paid to the awarding agency will be computed by applying the awarding agency's percentage of participation in the cost of the original purchase to the fair market value of the property. However, in those situations where a grantee or subgrantee is disposing of real property acquired with grant funds and acquiring replacement real property under the same program, the net proceeds from the disposition may be used as an offset to the cost of the replacement property.

(2) *Sale of property.* Sell the property and compensate the awarding agency. The amount due to the awarding agency will be calculated by applying the awarding agency's percentage of participation in the cost of the original purchase to the proceeds of the sale after deduction of any actual and reasonable selling and fixing-up expenses. If the grant is still active, the net proceeds from sale may be offset against the original cost of the property. When a grantee or subgrantee is directed to sell property, sales procedures shall be followed that provide for competition to the extent practicable and result in the highest possible return.

(3) *Transfer of title.* Transfer title to the awarding agency or to a third-party designated/approved by the awarding agency. The grantee or subgrantee shall be paid an amount calculated by applying the grantee or subgrantee's percentage of participation in the purchase of the real property to the current fair market value of the property.

(d) If the conditions in 23 U.S.C. 103(e) (5), (6), or (7), as appropriate, are met and approval is given by the Secretary, States shall not be required to repay the Highway Trust Fund for the cost of right-of-way and other items when certain segments of the Interstate System are withdrawn.

[53 FR 8086 and 8087, Mar. 11, 1988, as amended at 53 FR 8087, Mar. 11, 1988]

§ 18.32 Equipment.

(a) *Title.* Subject to the obligations and conditions set forth in this section, title to equipment acquired under a grant or subgrant will vest upon acquisition in the grantee or subgrantee respectively.

(b) *States.* A State will use, manage, and dispose of equipment acquired under a grant by the State in accordance with State laws and procedures. Other grantees and subgrantees will follow paragraphs (c) through (e) of this section.

(c) *Use.* (1) Equipment shall be used by the grantee or subgrantee in the program or project for which it was acquired as long as needed, whether or not the project or program continues to be supported by Federal funds. When no longer needed for the original program or project, the equipment may be used in other activities currently or

previously supported by a Federal agency.

(2) The grantee or subgrantee shall also make equipment available for use on other projects or programs currently or previously supported by the Federal Government, providing such use will not interfere with the work on the projects or program for which it was originally acquired. First preference for other use shall be given to other programs or projects supported by the awarding agency. User fees should be considered if appropriate.

(3) Notwithstanding the encouragement in §18.25(a) to earn program income, the grantee or subgrantee must not use equipment acquired with grant funds to provide services for a fee to compete unfairly with private companies that provide equivalent services, unless specifically permitted or contemplated by Federal statute.

(4) When acquiring replacement equipment, the grantee or subgrantee may use the equipment to be replaced as a trade-in or sell the property and use the proceeds to offset the cost of the replacement property, subject to the approval of the awarding agency.

(d) *Management requirements.* Procedures for managing equipment (including replacement equipment), whether acquired in whole or in part with grant funds, until disposition takes place will, as a minimum, meet the following requirements:

(1) Property records must be maintained that include a description of the property, a serial number or other identification number, the source of property, who holds title, the acquisition date, and cost of the property, percentage of Federal participation in the cost of the property, the location, use and condition of the property, and any ultimate disposition data including the date of disposal and sale price of the property.

(2) A physical inventory of the property must be taken and the results reconciled with the property records at least once every two years.

(3) A control system must be developed to ensure adequate safeguards to prevent loss, damage, or theft of the property. Any loss, damage, or theft shall be investigated.

(4) Adequate maintenance procedures must be developed to keep the property in good condition.

(5) If the grantee or subgrantee is authorized or required to sell the property, proper sales procedures must be established to ensure the highest possible return.

(e) *Disposition.* When original or replacement equipment acquired under a grant or subgrant is no longer needed for the original project or program or for other activities currently or previously supported by a Federal agency, disposition of the equipment will be made as follows:

(1) Items of equipment with a current per-unit fair market value of less than $5,000 may be retained, sold or otherwise disposed of with no further obligation to the awarding agency.

(2) Items of equipment with a current per unit fair market value in excess of $5,000 may be retained or sold and the awarding agency shall have a right to an amount calculated by multiplying the current market value or proceeds from sale by the awarding agency's share of the equipment.

(3) In cases where a grantee or subgrantee fails to take appropriate disposition actions, the awarding agency may direct the grantee or subgrantee to take excess and disposition actions.

(f) *Federal equipment.* In the event a grantee or subgrantee is provided federally-owned equipment:

(1) Title will remain vested in the Federal Government.

(2) Grantees or subgrantees will manage the equipment in accordance with Federal agency rules and procedures, and submit an annual inventory listing.

(3) When the equipment is no longer needed, the grantee or subgrantee will request disposition instructions from the Federal agency.

(g) *Right to transfer title.* The Federal awarding agency may reserve the right to transfer title to the Federal Government or a third part named by the awarding agency when such a third party is otherwise eligible under existing statutes. Such transfers shall be subject to the following standards:

(1) The property shall be identified in the grant or otherwise made known to the grantee in writing.

(2) The Federal awarding agency shall issue disposition instruction within 120 calendar days after the end of the Federal support of the project for which it was acquired. If the Federal awarding agency fails to issue disposition instructions within the 120 calendar-day period the grantee shall follow § 18.32(e).

(3) When title to equipment is transferred, the grantee shall be paid an amount calculated by applying the percentage of participation in the purchase to the current fair market value of the property.

§ 18.33 Supplies.

(a) *Title.* Title to supplies acquired under a grant or subgrant will vest, upon acquisition, in the grantee or subgrantee respectively.

(b) *Disposition.* If there is a residual inventory of unused supplies exceeding $5,000 in total aggregate fair market value upon termination or completion of the award, and if the supplies are not needed for any other federally sponsored programs or projects, the grantee or subgrantee shall compensate the awarding agency for its share.

§ 18.34 Copyrights.

The Federal awarding agency reserves a royalty-free, nonexclusive, and irrevocable license to reproduce, publish or otherwise use, and to authorize others to use, for Federal Government purposes:

(a) The copyright in any work developed under a grant, subgrant, or contract under a grant or subgrant; and

(b) Any rights of copyright to which a grantee, subgrantee or a contractor purchases ownership with grant support.

§ 18.35 Subawards to debarred and suspended parties.

Grantees and subgrantees must not make any award or permit any award (subgrant or contract) at any tier to any party which is debarred or suspended or is otherwise excluded from or ineligible for participation in Federal assistance programs under Executive Order 12549, ''Debarment and Suspension.''

§ 18.36 Procurement.

(a) *States.* When procuring property and services under a grant, a State will follow the same policies and procedures it uses for procurements from its non-Federal funds. The State will ensure that every purchase order or other contract includes any clauses required by Federal statutes and executive orders and their implementing regulations. Other grantees and subgrantees will follow paragraphs (b) through (i) in this section.

(b) *Procurement standards.* (1) Grantees and subgrantees will use their own procurement procedures which reflect applicable State and local laws and regulations, provided that the procurements conform to applicable Federal law and the standards identified in this section.

(2) Grantees and subgrantees will maintain a contract administration system which ensures that contractors perform in accordance with the terms, conditions, and specifications of their contracts or purchase orders.

(3) Grantees and subgrantees will maintain a written code of standards of conduct governing the performance of their employees engaged in the award and administration of contracts. No employee, officer or agent of the grantee or subgrantee shall participate in selection, or in the award or administration of a contract supported by Federal funds if a conflict of interest, real or apparent, would be involved. Such a conflict would arise when:

(i) The employee, officer or agent,

(ii) Any member of his immediate family,

(iii) His or her partner, or

(iv) An organization which employs, or is about to employ, any of the above, has a financial or other interest in the firm selected for award. The grantee's or subgrantee's officers, employees or agents will neither solicit nor accept gratuities, favors or anything of monetary value from contractors, potential contractors, or parties to subagreements. Grantee and subgrantees may set minimum rules where the financial interest is not substantial or the gift is an unsolicited item of nominal intrinsic value. To the extent permitted by State or local law or regulations, such standards or conduct

will provide for penalties, sanctions, or other disciplinary actions for violations of such standards by the grantee's and subgrantee's officers, employees, or agents, or by contractors or their agents. The awarding agency may in regulation provide additional prohibitions relative to real, apparent, or potential conflicts of interest.

(4) Grantee and subgrantee procedures will provide for a review of proposed procurements to avoid purchase of unnecessary or duplicative items. Consideration should be given to consolidating or breaking out procurements to obtain a more economical purchase. Where appropriate, an analysis will be made of lease versus purchase alternatives, and any other appropriate analysis to determine the most economical approach.

(5) To foster greater economy and efficiency, grantees and subgrantees are encouraged to enter into State and local intergovernmental agreements for procurement or use of common goods and services.

(6) Grantees and subgrantees are encouraged to use Federal excess and surplus property in lieu of purchasing new equipment and property whenever such use is feasible and reduces project costs.

(7) Grantees and subgrantees are encouraged to use value engineering clauses in contracts for construction projects of sufficient size to offer reasonable opportunities for cost reductions. Value engineering is a systematic and creative anaylsis of each contract item or task to ensure that its essential function is provided at the overall lower cost.

(8) Grantees and subgrantees will make awards only to responsible contractors possessing the ability to perform successfully under the terms and conditions of a proposed procurement. Consideration will be given to such matters as contractor integrity, compliance with public policy, record of past performance, and financial and technical resources.

(9) Grantees and subgrantees will maintain records sufficient to detail the significant history of a procurement. These records will include, but are not necessarily limited to the following: rationale for the method of procurement, selection of contract type, contractor selection or rejection, and the basis for the contract price.

(10) Grantees and subgrantees will use time and material type contracts only—

(i) After a determination that no other contract is suitable, and

(ii) If the contract includes a ceiling price that the contractor exceeds at its own risk.

(11) Grantees and subgrantees alone will be responsible, in accordance with good administrative practice and sound business judgment, for the settlement of all contractual and administrative issues arising out of procurements. These issues include, but are not limited to source evaluation, protests, disputes, and claims. These standards do not relieve the grantee or subgrantee of any contractual responsibilities under its contracts. Federal agencies will not substitute their judgment for that of the grantee or subgrantee unless the matter is primarily a Federal concern. Violations of law will be referred to the local, State, or Federal authority having proper jurisdiction.

(12) Grantees and subgrantees will have protest procedures to handle and resolve disputes relating to their procurements and shall in all instances disclose information regarding the protest to the awarding agency. A protestor must exhaust all administrative remedies with the grantee and subgrantee before pursuing a protest with the Federal agency. Reviews of protests by the Federal agency will be limited to:

(i) Violations of Federal law or regulations and the standards of this section (violations of State or local law will be under the jurisdiction of State or local authorities) and

(ii) Violations of the grantee's or subgrantee's protest procedures for failure to review a complaint or protest. Protests received by the Federal agency other than those specified above will be referred to the grantee or subgrantee.

(c) *Competition.* (1) All procurement transactions will be conducted in a manner providing full and open competition consistent with the standards of § 18.36. Some of the situations considered to be restrictive of competition include but are not limited to:

(i) Placing unreasonable requirements on firms in order for them to qualify to do business,

(ii) Requiring unnecessary experience and excessive bonding,

(iii) Noncompetitive pricing practices between firms or between affiliated companies,

(iv) Noncompetitive awards to consultants that are on retainer contracts,

(v) Organizational conflicts of interest,

(vi) Specifying only a ''brand name'' product instead of allowing ''an equal'' product to be offered and describing the performance of other relevant requirements of the procurement, and

(vii) Any arbitrary action in the procurement process.

(2) Grantees and subgrantees will conduct procurements in a manner that prohibits the use of statutorily or administratively imposed in-State or local geographical preferences in the evaluation of bids or proposals, except in those cases where applicable Federal statutes expressly mandate or encourage geographic preference. Nothing in this section preempts State licensing laws. When contracting for architectural and engineering (A/E) services, geographic location may be a selection criteria provided its application leaves an appropriate number of qualified firms, given the nature and size of the project, to compete for the contract.

(3) Grantees will have written selection procedures for procurement transactions. These procedures will ensure that all solicitations:

(i) Incorporate a clear and accurate description of the technical requirements for the material, product, or service to be procured. Such description shall not, in competitive procurements, contain features which unduly restrict competition. The description may include a statement of the qualitative nature of the material, product or service to be procured, and when necessary, shall set forth those minimum essential characteristics and standards to which it must conform if it is to satisfy its intended use. Detailed product specifications should be avoided if at all possible. When it is impractical or uneconomical to make a clear and accurate description of the technical requirements, a ''brand name or equal'' description may be used as a means to define the performance or other salient requirements of a procurement. The specific features of the named brand which must be met by offerors shall be clearly stated; and

(ii) Identify all requirements which the offerors must fulfill and all other factors to be used in evaluating bids or proposals.

(4) Grantees and subgrantees will ensure that all prequalified lists of persons, firms, or products which are used in acquiring goods and services are current and include enough qualified sources to ensure maximum open and free competition. Also, grantees and subgrantees will not preclude potential bidders from qualifying during the solicitation period.

(d) *Methods of procurement to be followed*—(1) *Procurement by small purchase procedures.* Small purchase procedures are those relatively simple and informal procurement methods for securing services, supplies, or other property that do not cost more than the simplified acquisition threshold fixed at 41 U.S.C. 403(11) (currently set at $100,000). If small purchase procedures are used, price or rate quotations shall be obtained from an adequate number of qualified sources.

(2) Procurement by *sealed bids* (formal advertising). Bids are publicly solicited and a firm-fixed-price contract (lump sum or unit price) is awarded to the responsible bidder whose bid, conforming with all the material terms and conditions of the invitation for bids, is the lowest in price. The sealed bid method is the preferred method for procuring construction, if the conditions in § 18.36(d)(2)(i) apply.

(i) In order for sealed bidding to be feasible, the following conditions should be present:

(A) A complete, adequate, and realistic specification or purchase description is available;

(B) Two or more responsible bidders are willing and able to compete effectively and for the business; and

(C) The procurement lends itself to a firm fixed price contract and the selection of the successful bidder can be made principally on the basis of price.

(ii) If sealed bids are used, the following requirements apply:

(A) The invitation for bids will be publicly advertised and bids shall be solicited from an adequate number of known suppliers, providing them sufficient time prior to the date set for opening the bids;

(B) The invitation for bids, which will include any specifications and pertinent attachments, shall define the items or services in order for the bidder to properly respond;

(C) All bids will be publicly opened at the time and place prescribed in the invitation for bids;

(D) A firm fixed-price contract award will be made in writing to the lowest responsive and responsible bidder. Where specified in bidding documents, factors such as discounts, transportation cost, and life cycle costs shall be considered in determining which bid is lowest. Payment discounts will only be used to determine the low bid when prior experience indicates that such discounts are usually taken advantage of; and

(E) Any or all bids may be rejected if there is a sound documented reason.

(3) Procurement by *competitive proposals.* The technique of competitive proposals is normally conducted with more than one source submitting an offer, and either a fixed-price or cost-reimbursement type contract is awarded. It is generally used when conditions are not appropriate for the use of sealed bids. If this method is used, the following requirements apply:

(i) Requests for proposals will be publicized and identify all evaluation factors and their relative importance. Any response to publicized requests for proposals shall be honored to the maximum extent practical;

(ii) Proposals will be solicited from an adequate number of qualified sources;

(iii) Grantees and subgrantees will have a method for conducting technical evaluations of the proposals received and for selecting awardees;

(iv) Awards will be made to the responsible firm whose proposal is most advantageous to the program, with price and other factors considered; and

(v) Grantees and subgrantees may use competitive proposal procedures for qualifications-based procurement of architectural/engineering (A/E) professional services whereby competitors' qualifications are evaluated and the most qualified competitor is selected, subject to negotiation of fair and reasonable compensation. The method, where price is not used as a selection factor, can only be used in procurement of A/E professional services. It cannot be used to purchase other types of services though A/E firms are a potential source to perform the proposed effort.

(4) Procurement by *noncompetitive proposals* is procurement through solicitation of a proposal from only one source, or after solicitation of a number of sources, competition is determined inadequate.

(i) Procurement by noncompetitive proposals may be used only when the award of a contract is infeasible under small purchase procedures, sealed bids or competitive proposals and one of the following circumstances applies:

(A) The item is available only from a single source;

(B) The public exigency or emergency for the requirement will not permit a delay resulting from competitive solicitation;

(C) The awarding agency authorizes noncompetitive proposals; or

(D) After solicitation of a number of sources, competition is determined inadequate.

(ii) Cost analysis, i.e., verifying the proposed cost data, the projections of the data, and the evaluation of the specific elements of costs and profits, is required.

(iii) Grantees and subgrantees may be required to submit the proposed procurement to the awarding agency for pre-award review in accordance with paragraph (g) of this section.

(e) *Contracting with small and minority firms, women's business enterprise and labor surplus area firms.* (1) The grantee and subgrantee will take all necessary affirmative steps to assure that minority firms, women's business enterprises, and labor surplus area firms are used when possible.

(2) Affirmative steps shall include:

(i) Placing qualified small and minority businesses and women's business enterprises on solicitation lists;

(ii) Assuring that small and minority businesses, and women's business enterprises are solicited whenever they are potential sources;

(iii) Dividing total requirements, when economically feasible, into smaller tasks or quantities to permit maximum participation by small and minority business, and women's business enterprises;

(iv) Establishing delivery schedules, where the requirement permits, which encourage participation by small and minority business, and women's business enterprises;

(v) Using the services and assistance of the Small Business Administration, and the Minority Business Development Agency of the Department of Commerce; and

(vi) Requiring the prime contractor, if subcontracts are to be let, to take the affirmative steps listed in paragraphs (e)(2) (i) through (v) of this section.

(f) *Contract cost and price.* (1) Grantees and subgrantees must perform a cost or price analysis in connection with every procurement action including contract modifications. The method and degree of analysis is dependent on the facts surrounding the particular procurement situation, but as a starting point, grantees must make independent estimates before receiving bids or proposals. A cost analysis must be performed when the offeror is required to submit the elements of his estimated cost, e.g., under professional, consulting, and architectural engineering services contracts. A cost analysis will be necessary when adequate price competition is lacking, and for sole source procurements, including contract modifications or change orders, unless price resonableness can be established on the basis of a catalog or market price of a commercial product sold in substantial quantities to the general public or based on prices set by law or regulation. A price analysis will be used in all other instances to determine the reasonableness of the proposed contract price.

(2) Grantees and subgrantees will negotiate profit as a separate element of the price for each contract in which there is no price competition and in all cases where cost analysis is performed. To establish a fair and reasonable profit, consideration will be given to the complexity of the work to be performed, the risk borne by the contractor, the contractor's investment, the amount of subcontracting, the quality of its record of past performance, and industry profit rates in the surrounding geographical area for similar work.

(3) Costs or prices based on estimated costs for contracts under grants will be allowable only to the extent that costs incurred or cost estimates included in negotiated prices are consistent with Federal cost principles (see §18.22). Grantees may reference their own cost principles that comply with the applicable Federal cost principles.

(4) The cost plus a percentage of cost and percentage of construction cost methods of contracting shall not be used.

(g) *Awarding agency review.* (1) Grantees and subgrantees must make available, upon request of the awarding agency, technical specifications on proposed procurements where the awarding agency believes such review is needed to ensure that the item and/or service specified is the one being proposed for purchase. This review generally will take place prior to the time the specification is incorporated into a solicitation document. However, if the grantee or subgrantee desires to have the review accomplished after a solicitation has been developed, the awarding agency may still review the specifications, with such review usually limited to the technical aspects of the proposed purchase.

(2) Grantees and subgrantees must on request make available for awarding agency pre-award review procurement documents, such as requests for proposals or invitations for bids, independent cost estimates, etc. when:

(i) A grantee's or subgrantee's procurement procedures or operation fails to comply with the procurement standards in this section; or

(ii) The procurement is expected to exceed the simplified acquisition threshold and is to be awarded without competition or only one bid or offer is received in response to a solicitation; or

(iii) The procurement, which is expected to exceed the simplified acquisition threshold, specifies a ''brand name'' product; or

(iv) The proposed award is more than the simplified acquisition threshold and is to be awarded to other than the apparent low bidder under a sealed bid procurement; or

(v) A proposed contract modification changes the scope of a contract or increases the contract amount by more than the simplified acquisition threshold.

(3) A grantee or subgrantee will be exempt from the pre-award review in paragraph (g)(2) of this section if the awarding agency determines that its procurement systems comply with the standards of this section.

(i) A grantee or subgrantee may request that its procurement system be reviewed by the awarding agency to determine whether its system meets these standards in order for its system to be certified. Generally, these reviews shall occur where there is a continuous high-dollar funding, and third-party contracts are awarded on a regular basis.

(ii) A grantee or subgrantee may self-certify its procurement system. Such self-certification shall not limit the awarding agency's right to survey the system. Under a self-certification procedure, awarding agencies may wish to rely on written assurances from the grantee or subgrantee that it is complying with these standards. A grantee or subgrantee will cite specific procedures, regulations, standards, etc., as being in compliance with these requirements and have its system available for review.

(h) *Bonding requirements.* For construction or facility improvement contracts or subcontracts exceeding the simplified acquisition threshold, the awarding agency may accept the bonding policy and requirements of the grantee or subgrantee provided the awarding agency has made a determination that the awarding agency's interest is adequately protected. If such a determination has not been made, the minimum requirements shall be as follows:

(1) *A bid guarantee from each bidder equivalent to five percent of the bid price.* The ''bid guarantee'' shall consist of a firm commitment such as a bid bond, certified check, or other negotiable instrument accompanying a bid as assurance that the bidder will, upon acceptance of his bid, execute such contractual documents as may be required within the time specified.

(2) *A performance bond on the part of the contractor for 100 percent of the contract price.* A ''performance bond'' is one executed in connection with a contract to secure fulfillment of all the contractor's obligations under such contract.

(3) *A payment bond on the part of the contractor for 100 percent of the contract price.* A ''payment bond'' is one executed in connection with a contract to assure payment as required by law of all persons supplying labor and material in the execution of the work provided for in the contract.

(i) *Contract provisions.* A grantee's and subgrantee's contracts must contain provisions in paragraph (i) of this section. Federal agencies are permitted to require changes, remedies, changed conditions, access and records retention, suspension of work, and other clauses approved by the Office of Federal Procurement Policy.

(1) Administrative, contractual, or legal remedies in instances where contractors violate or breach contract terms, and provide for such sanctions and penalties as may be appropriate. (Contracts more than the simplified acquisition threshold)

(2) Termination for cause and for convenience by the grantee or subgrantee including the manner by which it will be effected and the basis for settlement. (All contracts in excess of $10,000)

(3) Compliance with Executive Order 11246 of September 24, 1965, entitled ''Equal Employment Opportunity,'' as amended by Executive Order 11375 of October 13, 1967, and as supplemented in Department of Labor regulations (41 CFR chapter 60). (All construction contracts awarded in excess of $10,000 by grantees and their contractors or subgrantees)

(4) Compliance with the Copeland ''Anti-Kickback'' Act (18 U.S.C. 874) as supplemented in Department of Labor

regulations (29 CFR part 3). (All contracts and subgrants for construction or repair)

(5) Compliance with the Davis-Bacon Act (40 U.S.C. 276a to 276a–7) as supplemented by Department of Labor regulations (29 CFR part 5). (Construction contracts in excess of $2000 awarded by grantees and subgrantees when required by Federal grant program legislation)

(6) Compliance with Sections 103 and 107 of the Contract Work Hours and Safety Standards Act (40 U.S.C. 327–330) as supplemented by Department of Labor regulations (29 CFR part 5). (Construction contracts awarded by grantees and subgrantees in excess of $2000, and in excess of $2500 for other contracts which involve the employment of mechanics or laborers)

(7) Notice of awarding agency requirements and regulations pertaining to reporting.

(8) Notice of awarding agency requirements and regulations pertaining to patent rights with respect to any discovery or invention which arises or is developed in the course of or under such contract.

(9) Awarding agency requirements and regulations pertaining to copyrights and rights in data.

(10) Access by the grantee, the subgrantee, the Federal grantor agency, the Comptroller General of the United States, or any of their duly authorized representatives to any books, documents, papers, and records of the contractor which are directly pertinent to that specific contract for the purpose of making audit, examination, excerpts, and transcriptions.

(11) Retention of all required records for three years after grantees or subgrantees make final payments and all other pending matters are closed.

(12) Compliance with all applicable standards, orders, or requirements issued under section 306 of the Clean Air Act (42 U.S.C. 1857(h)), section 508 of the Clean Water Act (33 U.S.C. 1368), Executive Order 11738, and Environmental Protection Agency regulations (40 CFR part 15). (Contracts, subcontracts, and subgrants of amounts in excess of $100,000)

(13) Mandatory standards and policies relating to energy efficiency which are contained in the state energy conservation plan issued in compliance with the Energy Policy and Conservation Act (Pub. L. 94–163, 89 Stat. 871).

(j) 23 U.S.C. 112(a) directs the Secretary to require recipients of highway construction grants to use bidding methods that are ''effective in securing competition.'' Detailed construction contracting procedures are contained in 23 CFR part 635, subpart A.

(k) Section 3(a)(2)(C) of the UMT Act of 1964, as amended, prohibits the use of grant or loan funds to support procurements utilizing exclusionary or discriminatory specifications.

(l) 46 U.S.C. 1241(b)(1) and 46 CFR part 381 impose cargo preference requirements on the shipment of foreign made goods.

(m) Section 165 of the Surface Transportation Assistance Act of 1982, 49 U.S.C. 1601, section 337 of the Surface Transportation and Uniform Relocation Assistance Act of 1987, and 49 CFR parts 660 and 661 impose Buy America provisions on the procurement of foreign products and materials.

(n) Section 105(f) of the Surface Transportation Assistance Act of 1982, section 106(c) of the Surface Transportation and Uniform Relocation Assistance Act of 1987, and 49 CFR part 23 impose requirements for the participation of disadvantaged business enterprises.

(o) Section 308 of the Surface Transportation Assistance Act of 1982, 49 U.S.C. 1068(b)(2), authorizes the use of competitive negotiation for the purchase of rolling stock as appropriate.

(p) 23 U.S.C. 112(b) provides for an exemption to competitive bidding requirements for highway construction contracts in emergency situations.

(q) 23 U.S.C. 112 requires concurrence by the Secretary before highway construction contracts can be awarded, except for projects authorized under the provisions of 23 U.S.C. 171.

(r) 23 U.S.C. 112(e) requires standardized contract clauses concerning site conditions, suspension or work, and material changes in the scope of the work for highway construction contracts.

(s) 23 U.S.C. 140(b) authorizes the preferential employment of Indians on Indian Reservation road projects and contracts.

(t) FHWA, UMTA, and Federal Aviation Administration (FAA) grantees and subgrantees shall extend the use of qualifications-based (e.g., architectural and engineering services) contract selection procedures to certain other related areas and shall award such contracts in the same manner as Federal contracts for architectural and engineering services are negotiated under Title IX of the Federal Property and Administrative Services Act of 1949, or equivalent State (or airport sponsor for FAA) qualifications-based requirements. For FHWA and UMTA programs, this provision applies except to the extent that a State adopts or has adopted by statute a formal procedure for the procurement of such services.

[53 FR 8086 and 8087, Mar. 11, 1988, as amended at 53 FR 8087, Mar. 11, 1988; 60 FR 19639, 19647, Apr. 19, 1995]

§ 18.37 Subgrants.

(a) *States.* States shall follow state law and procedures when awarding and administering subgrants (whether on a cost reimbursement or fixed amount basis) of financial assistance to local and Indian tribal governments. States shall:

(1) Ensure that every subgrant includes any clauses required by Federal statute and executive orders and their implementing regulations;

(2) Ensure that subgrantees are aware of requirements imposed upon them by Federal statute and regulation;

(3) Ensure that a provision for compliance with § 18.42 is placed in every cost reimbursement subgrant; and

(4) Conform any advances of grant funds to subgrantees substantially to the same standards of timing and amount that apply to cash advances by Federal agencies.

(b) *All other grantees.* All other grantees shall follow the provisions of this part which are applicable to awarding agencies when awarding and administering subgrants (whether on a cost reimbursement or fixed amount basis) of financial assistance to local and Indian tribal governments. Grantees shall:

(1) Ensure that every subgrant includes a provision for compliance with this part;

(2) Ensure that every subgrant includes any clauses required by Federal statute and executive orders and their implementing regulations; and

(3) Ensure that subgrantees are aware of requirements imposed upon them by Federal statutes and regulations.

(c) *Exceptions.* By their own terms, certain provisions of this part do not apply to the award and administration of subgrants:

(1) Section 18.10;

(2) Section 18.11;

(3) The letter-of-credit procedures specified in Treasury Regulations at 31 CFR part 205, cited in § 18.21; and

(4) Section 18.50.

REPORTS, RECORDS, RETENTION, AND ENFORCEMENT

§ 18.40 Monitoring and reporting program performance.

(a) *Monitoring by grantees.* Grantees are responsible for managing the day-to-day operations of grant and subgrant supported activities. Grantees must monitor grant and subgrant supported activities to assure compliance with applicable Federal requirements and that performance goals are being achieved. Grantee monitoring must cover each program, function or activity.

(b) *Nonconstruction performance reports.* The Federal agency may, if it decides that performance information available from subsequent applications contains sufficient information to meet its programmatic needs, require the grantee to submit a performance report only upon expiration or termination of grant support. Unless waived by the Federal agency this report will be due on the same date as the final Financial Status Report.

(1) Grantees shall submit annual performance reports unless the awarding agency requires quarterly or semi-annual reports. However, performance reports will not be required more frequently than quarterly. Annual reports shall be due 90 days after the grant year, quarterly or semi-annual reports shall be due 30 days after the reporting period. The final performance report will be due 90 days after the expiration or termination of grant support. If a

justified request is submitted by a grantee, the Federal agency may extend the due date for any performance report. Additionally, requirements for unnecessary performance reports may be waived by the Federal agency.

(2) Performance reports will contain, for each grant, brief information on the following:

(i) A comparison of actual accomplishments to the objectives established for the period. Where the output of the project can be quantified, a computation of the cost per unit of output may be required if that information will be useful.

(ii) The reasons for slippage if established objectives were not met.

(iii) Additional pertinent information including, when appropriate, analysis and explanation of cost overruns or high unit costs.

(3) Grantees will not be required to submit more than the original and two copies of performance reports.

(4) Grantees will adhere to the standards in this section in prescribing performance reporting requirements for subgrantees.

(c) *Construction performance reports.* For the most part, on-site technical inspections and certified percentage-of-completion data are relied on heavily by Federal agencies to monitor progress under construction grants and subgrants. The Federal agency will require additional formal performance reports only when considered necessary, and never more frequently than quarterly.

(1) Section 12(h) of the UMT Act of 1964, as amended, requires pre-award testing of new buses models.

(2) [Reserved]

(d) *Significant developments.* Events may occur between the scheduled performance reporting dates which have significant impact upon the grant or subgrant supported activity. In such cases, the grantee must inform the Federal agency as soon as the following types of conditions become known:

(1) Problems, delays, or adverse conditions which will materially impair the ability to meet the objective of the award. This disclosure must include a statement of the action taken, or contemplated, and any assistance needed to resolve the situation.

(2) Favorable developments which enable meeting time schedules and objectives sooner or at less cost than anticipated or producing more beneficial results than originally planned.

(e) Federal agencies may make site visits as warranted by program needs.

(f) *Waivers, extensions.* (1) Federal agencies may waive any performance report required by this part if not needed.

(2) The grantee may waive any performance report from a subgrantee when not needed. The grantee may extend the due date for any performance report from a subgrantee if the grantee will still be able to meet its performance reporting obligations to the Federal agency.

[53 FR 8086 and 8087, Mar. 11, 1988, as amended at 53 FR 8087, Mar. 11, 1988]

§ 18.41 Financial reporting.

(a) *General.* (1) Except as provided in paragraphs (a) (2) and (5) of this section, grantees will use only the forms specified in paragraphs (a) through (e) of this section, and such supplementary or other forms as may from time to time be authorized by OMB, for:

(i) Submitting financial reports to Federal agencies, or

(ii) Requesting advances or reimbursements when letters of credit are not used.

(2) Grantees need not apply the forms prescribed in this section in dealing with their subgrantees. However, grantees shall not impose more burdensome requirements on subgrantees.

(3) Grantees shall follow all applicable standard and supplemental Federal agency instructions approved by OMB to the extent required under the Paperwork Reduction Act of 1980 for use in connection with forms specified in paragraphs (b) through (e) of this section. Federal agencies may issue substantive supplementary instructions only with the approval of OMB. Federal agencies may shade out or instruct the grantee to disregard any line item that the Federal agency finds unnecessary for its decisionmaking purposes.

(4) Grantees will not be required to submit more than the original and two copies of forms required under this part.

(5) Federal agencies may provide computer outputs to grantees to expedite or contribute to the accuracy of reporting. Federal agencies may accept the required information from grantees in machine usable format or computer printouts instead of prescribed forms.

(6) Federal agencies may waive any report required by this section if not needed.

(7) Federal agencies may extend the due date of any financial report upon receiving a justified request from a grantee.

(b) *Financial Status Report*—(1) *Form.* Grantees will use Standard Form 269 or 269A, Financial Status Report, to report the status of funds for all nonconstruction grants and for construction grants when required in accordance with §18.41(e)(2)(iii).

(2) *Accounting basis.* Each grantee will report program outlays and program income on a cash or accrual basis as prescribed by the awarding agency. If the Federal agency requires accrual information and the grantee's accounting records are not normally kept on the accural basis, the grantee shall not be required to convert its accounting system but shall develop such accrual information through and analysis of the documentation on hand.

(3) *Frequency.* The Federal agency may prescribe the frequency of the report for each project or program. However, the report will not be required more frequently than quarterly. If the Federal agency does not specify the frequency of the report, it will be submitted annually. A final report will be required upon expiration or termination of grant support.

(4) *Due date.* When reports are required on a quarterly or semiannual basis, they will be due 30 days after the reporting period. When required on an annual basis, they will be due 90 days after the grant year. Final reports will be due 90 days after the expiration or termination of grant support.

(c) *Federal Cash Transactions Report*—(1) *Form.* (i) For grants paid by letter or credit, Treasury check advances or electronic transfer of funds, the grantee will submit the Standard Form 272, Federal Cash Transactions Report, and when necessary, its continuation sheet, Standard Form 272a, unless the terms of the award exempt the grantee from this requirement.

(ii) These reports will be used by the Federal agency to monitor cash advanced to grantees and to obtain disbursement or outlay information for each grant from grantees. The format of the report may be adapted as appropriate when reporting is to be accomplished with the assistance of automatic data processing equipment provided that the information to be submitted is not changed in substance.

(2) *Forecasts of Federal cash requirements.* Forecasts of Federal cash requirements may be required in the ''Remarks'' section of the report.

(3) *Cash in hands of subgrantees.* When considered necessary and feasible by the Federal agency, grantees may be required to report the amount of cash advances in excess of three days needs in the hands of their subgrantees or contractors and to provide short narrative explanations of actions taken by the grantee to reduce the excess balances.

(4) *Frequency and due date.* Grantees must submit the report no later than 15 working days following the end of each quarter. However, where an advance either by letter of credit or electronic transfer of funds is authorized at an annualized rate of one million dollars or more, the Federal agency may require the report to be submitted within 15 working days following the end of each month.

(d) *Request for advance or reimbursement*—(1) *Advance payments.* Requests for Treasury check advance payments will be submitted on Standard Form 270, Request for Advance or Reimbursement. (This form will not be used for drawdowns under a letter of credit, electronic funds transfer or when Treasury check advance payments are made to the grantee automatically on a predetermined basis.)

(2) *Reimbursements.* Requests for reimbursement under nonconstruction grants will also be submitted on Standard Form 270. (For reimbursement requests under construction grants, see paragraph (e)(1) of this section.)

(3) The frequency for submitting payment requests is treated in §18.41(b)(3).

(e) *Outlay report and request for reimbursement for construction programs.* (1)

Grants that support construction activities paid by reimbursement method. (i) Requests for reimbursement under construction grants will be submitted on Standard Form 271, Outlay Report and Request for Reimbursement for Construction Programs. Federal agencies may, however, prescribe the Request for Advance or Reimbursement form, specified in § 18.41(d), instead of this form.

(ii) The frequency for submitting reimbursement requests is treated in § 18.41(b)(3).

(2) *Grants that support construction activities paid by letter of credit, electronic funds transfer or Treasury check advance.* (i) When a construction grant is paid by letter of credit, electronic funds transfer or Treasury check advances, the grantee will report its outlays to the Federal agency using Standard Form 271, Outlay Report and Request for Reimbursement for Construction Programs. The Federal agency will provide any necessary special instruction. However, frequency and due date shall be governed by § 18.41(b)(3) and (4).

(ii) When a construction grant is paid by Treasury check advances based on periodic requests from the grantee, the advances will be requested on the form specified in § 18.41(d).

(iii) The Federal agency may substitute the Financial Status Report specified in § 18.41(b) for the Outlay Report and Request for Reimbursement for Construction Programs.

(3) *Accounting basis.* The accounting basis for the Outlay Report and Request for Reimbursement for Construction Programs shall be governed by § 18.41(b)(2).

(f) Notwithstanding the provisions of paragraphs (a)(1) of this section, recipients of FHWA and National Highway Traffic Safety Administration (NHTSA) grants shall use FHWA, NHTSA or State financial reports.

[53 FR 8086 and 8087, Mar. 11, 1988, as amended at 53 FR 8087, Mar. 11, 1988]

§ 18.42 Retention and access requirements for records.

(a) *Applicability.* (1) This section applies to all financial and programmatic records, supporting documents, statistical records, and other records of grantees or subgrantees which are:

(i) Required to be maintained by the terms of this part, program regulations or the grant agreement, or

(ii) Otherwise reasonably considered as pertinent to program regulations or the grant agreement.

(2) This section does not apply to records maintained by contractors or subcontractors. For a requirement to place a provision concerning records in certain kinds of contracts, see § 18.36(i)(10).

(b) *Length of retention period.* (1) Except as otherwise provided, records must be retained for three years from the starting date specified in paragraph (c) of this section.

(2) If any litigation, claim, negotiation, audit or other action involving the records has been started before the expiration of the 3-year period, the records must be retained until completion of the action and resolution of all issues which arise from it, or until the end of the regular 3-year period, whichever is later.

(3) To avoid duplicate recordkeeping, awarding agencies may make special arrangements with grantees and subgrantees to retain any records which are continuously needed for joint use. The awarding agency will request transfer of records to its custody when it determines that the records possess long-term retention value. When the records are transferred to or maintained by the Federal agency, the 3-year retention requirement is not applicable to the grantee or subgrantee.

(c) *Starting date of retention period*—(1) *General.* When grant support is continued or renewed at annual or other intervals, the retention period for the records of each funding period starts on the day the grantee or subgrantee submits to the awarding agency its single or last expenditure report for that period. However, if grant support is continued or renewed quarterly, the retention period for each year's records starts on the day the grantee submits its expenditure report for the last quarter of the Federal fiscal year. In all other cases, the retention period starts on the day the grantee submits its

final expenditure report. If an expenditure report has been waived, the retention period starts on the day the report would have been due.

(2) *Real property and equipment records.* The retention period for real property and equipment records starts from the date of the disposition or replacement or transfer at the direction of the awarding agency.

(3) *Records for income transactions after grant or subgrant support.* In some cases grantees must report income after the period of grant support. Where there is such a requirement, the retention period for the records pertaining to the earning of the income starts from the end of the grantee's fiscal year in which the income is earned.

(4) *Indirect cost rate proposals, cost allocations plans, etc.* This paragraph applies to the following types of documents, and their supporting records: indirect cost rate computations or proposals, cost allocation plans, and any similar accounting computations of the rate at which a particular group of costs is chargeable (such as computer usage chargeback rates or composite fringe benefit rates).

(i) *If submitted for negotiation.* If the proposal, plan, or other computation is required to be submitted to the Federal Government (or to the grantee) to form the basis for negotiation of the rate, then the 3-year retention period for its supporting records starts from the date of such submission.

(ii) *If not submitted for negotiation.* If the proposal, plan, or other computation is not required to be submitted to the Federal Government (or to the grantee) for negotiation purposes, then the 3-year retention period for the proposal plan, or computation and its supporting records starts from theend of the fiscal year (or other accounting period) covered by the proposal, plan, or other computation.

(d) *Substitution of microfilm.* Copies made by microfilming, photocopying, or similar methods may be substituted for the original records.

(e) *Access to records*—(1) *Records of grantees and subgrantees.* The awarding agency and the Comptroller General of the United States, or any of their authorized representatives, shall have the right of access to any pertinent books, documents, papers, or other records of grantees and subgrantees which are pertinent to the grant, in order to make audits, examinations, excerpts, and transcripts.

(2) *Expiration of right of access.* The right of access in this section must not be limited to the required retention period but shall last as long as the records are retained.

(f) *Restrictions on public access.* The Federal Freedom of Information Act (5 U.S.C. 552) does not apply to records unless required by Federal, State, or local law, grantees and subgrantees are not required to permit public access to their records.

§ 18.43 Enforcement.

(a) *Remedies for noncompliance.* If a grantee or subgrantee materially fails to comply with any term of an award, whether stated in a Federal statute or regulation, an assurance, in a State plan or application, a notice of award, or elsewhere, the awarding agency may take one or more of the following actions, as appropriate in the circumstances:

(1) Temporarily withhold cash payments pending correction of the deficiency by the grantee or subgrantee or more severe enforcement action by the awarding agency,

(2) Disallow (that is, deny both use of funds and matching credit for) all or part of the cost of the activity or action not in compliance,

(3) Wholly or partly suspend or terminate the current award for the grantee's or subgrantee's program,

(4) Withhold further awards for the program, or

(5) Take other remedies that may be legally available.

(b) *Hearings, appeals.* In taking an enforcement action, the awarding agency will provide the grantee or subgrantee an opportunity for such hearing, appeal, or other administrative proceeding to which the grantee or subgrantee is entitled under any statute or regulation applicable to the action involved.

(c) *Effects of suspension and termination.* Costs of grantee or subgrantee resulting from obligations incurred by the grantee or subgrantee during a suspension or after termination of an

award are not allowable unless the awarding agency expressly authorizes them in the notice of suspension or termination or subsequently. Other grantee or subgrantee costs during suspension or after termination which are necessary and not reasonably avoidable are allowable if:

(1) The costs result from obligations which were properly incurred by the grantee or subgrantee before the effective date of suspension or termination, are not in anticipation of it, and, in the case of a termination, are noncancellable, and,

(2) The costs would be allowable if the award were not suspended or expired normally at the end of the funding period in which the termination takes effect.

(d) *Relationship to debarment and suspension.* The enforcement remedies identified in this section, including suspension and termination, do not preclude grantee or subgrantee from being subject to ''Debarment and Suspension'' under E.O. 12549 (see § 18.35).

§ 18.44 Termination for convenience.

Except as provided in § 18.43 awards may be terminated in whole or in part only as follows:

(a) By the awarding agency with the consent of the grantee or subgrantee in which case the two parties shall agree upon the termination conditions, including the effective date and in the case of partial termination, the portion to be terminated, or

(b) By the grantee or subgrantee upon written notification to the awarding agency, setting forth the reasons for such termination, the effective date, and in the case of partial termination, the portion to be terminated. However, if, in the case of a partial termination, the awarding agency determines that the remaining portion of the award will not accomplish the purposes for which the award was made, the awarding agency may terminate the award in its entirety under either § 18.43 or paragraph (a) of this section.

Subpart D—After-The-Grant Requirements

§ 18.50 Closeout.

(a) *General.* The Federal agency will close out the award when it determines that all applicable administrative actions and all required work of the grant has been completed.

(b) *Reports.* Within 90 days after the expiration or termination of the grant, the grantee must submit all financial, performance, and other reports required as a condition of the grant. Upon request by the grantee, Federal agencies may extend this timeframe. These may include but are not limited to:

(1) *Final performance or progress report.*

(2) *Financial Status Report (SF 269) or Outlay Report and Request for Reimbursement for Construction Programs (SF–271) (as applicable).*

(3) *Final request for payment (SF–270) (if applicable).*

(4) *Invention disclosure (if applicable).*

(5) *Federally-owned property report:*

In accordance with § 18.32(f), a grantee must submit an inventory of all federally owned property (as distinct from property acquired with grant funds) for which it is accountable and request disposition instructions from the Federal agency of property no longer needed.

(c) *Cost adjustment.* The Federal agency will, within 90 days after receipt of reports in paragraph (b) of this section, make upward or downward adjustments to the allowable costs.

(d) *Cash adjustments.* (1) The Federal agency will make prompt payment to the grantee for allowable reimbursable costs.

(2) The grantee must immediately refund to the Federal agency any balance of unobligated (unencumbered) cash advanced that is not authorized to be retained for use on other grants.

§ 18.51 Later disallowances and adjustments.

The closeout of a grant does not affect:

(a) The Federal agency's right to disallow costs and recover funds on the basis of a later audit or other review;

(b) The grantee's obligation to return any funds due as a result of later refunds, corrections, or other transactions;

(c) Records retention as required in § 18.42;

(d) Property management requirements in §§ 18.31 and 18.32; and

(e) Audit requirements in § 18.26.

§ 18.52 Collection of amounts due.

(a) Any funds paid to a grantee in excess of the amount to which the grantee is finally determined to be entitled under the terms of the award constitute a debt to the Federal Government. If not paid within a reasonable period after demand, the Federal agency may reduce the debt by:

(1) Making an adminstrative offset against other requests for reimbursements,

(2) Withholding advance payments otherwise due to the grantee, or

(3) Other action permitted by law.

(b) Except where otherwise provided by statutes or regulations, the Federal agency will charge interest on an overdue debt in accordance with the Federal Claims Collection Standards (4 CFR Ch. II). The date from which interest is computed is not extended by litigation or the filing of any form of appeal.

Subpart E—Entitlements [Reserved]

PART 19—UNIFORM ADMINISTRATIVE REQUIREMENTS FOR GRANTS AND AGREEMENTS WITH INSTITUTIONS OF HIGHER EDUCATION, HOSPITALS, AND OTHER NON-PROFIT ORGANIZATIONS

Subpart A—General

Sec.
19.1 Purpose.
19.2 Definitions.
19.3 Effect on other issuances.
19.4 Deviations.
19.5 Subawards.
19.6 Availability of material referenced in this part.

Subpart B—Pre-Award Requirements

19.10 Purpose.
19.11 Pre-award policies.
19.12 Forms for applying for Federal assistance.
19.13 Debarment and suspension.
19.14 Special award conditions.
19.15 Metric system of measurement.
19.16 Resource Conservation and Recovery Act.
19.17 Certifications and representations.

Subpart C—Post-Award Requirements

FINANCIAL AND PROGRAM MANAGEMENT

19.20 Purpose of financial and program management.
19.21 Standards for financial management systems.
19.22 Payment.
19.23 Cost sharing or matching.
19.24 Program income.
19.25 Revision of budget and program plans.
19.26 Non-Federal audits.
19.27 Allowable costs.
19.28 Period of availability of funds.

PROPERTY STANDARDS

19.30 Purpose of property standards.
19.31 Insurance coverage.
19.32 Real property.
19.33 Federally-owned and exempt property.
19.34 Equipment.
19.35 Supplies and other expendable property.
19.36 Intangible property.
19.37 Property trust relationship.

PROCUREMENT STANDARDS

19.40 Purpose of procurement standards.
19.41 Recipient responsibilities.
19.42 Codes of conduct.
19.43 Competition.
19.44 Procurement procedures.
19.45 Cost and price analysis.
19.46 Procurement records.
19.47 Contract administration.
19.48 Contract provisions.

REPORTS AND RECORDS

19.50 Purpose of reports and records.
19.51 Monitoring and reporting program performance.
19.52 Financial reporting.
19.53 Retention and access requirements for records.

TERMINATION AND ENFORCEMENT

19.60 Purpose of termination and enforcement.
19.61 Termination.
19.62 Enforcement.

Subpart D—After-the-Award Requirements

19.70 Purpose.
19.71 Closeout procedures.
19.72 Subsequent adjustments and continuing responsibilities.
19.73 Collection of amounts due.
APPENDIX A TO PART 19—CONTRACT PROVISIONS

AUTHORITY: 49 U.S.C. 322(a).

SOURCE: 59 FR 15639, Apr. 4, 1994, unless otherwise noted.

Subpart A—General

§ 19.1 Purpose.

This part establishes uniform administrative requirements for Federal grants and agreements awarded to institutions of higher education, hospitals, and other non-profit organizations. Federal awarding agencies shall not impose additional or inconsistent requirements, except as provided in §§ 19.4 and 19.14 or unless specifically required by Federal statute or executive order. Non-profit organizations that implement Federal programs for the States are also subject to State requirements.

§ 19.2 Definitions.

(a) *Accrued expenditures* means the charges incurred by the recipient during a given period requiring the provision of funds for:

(1) Goods and other tangible property received;

(2) Services performed by employees, contractors, subrecipients, and other payees; and,

(3) Other amounts becoming owed under programs for which no current services or performance is required.

(b) *Accrued income* means the sum of: (1) Earnings during a given period from:

(i) Services performed by the recipient, and

(ii) Goods and other tangible property delivered to purchasers; and

(2) Amounts becoming owed to the recipient for which no current services or performance is required by the recipient.

(c) *Acquisition cost of equipment* means the net invoice price of the equipment, including the cost of modifications, attachments, accessories, or auxiliary apparatus necessary to make the property usable for the purpose for which it was acquired. Other charges, such as the cost of installation, transportation, taxes, duty or protective in-transit insurance, shall be included or excluded from the unit acquisition cost in accordance with the recipient's regular accounting practices.

(d) *Advance* means a payment made by Treasury check or other appropriate payment mechanism to a recipient upon its request either before outlays are made by the recipient or through the use of predetermined payment schedules.

(e) *Award* means financial assistance that provides support or stimulation to accomplish a public purpose. Awards include grants and other agreements in the form of money or property in lieu of money, by the Federal Government to an eligible recipient. The term does not include: Technical assistance, which provides services instead of money; other assistance in the form of loans, loan guarantees, interest subsidies, or insurance; direct payments of any kind to individuals; and, contracts which are required to be entered into and administered under procurement laws and regulations.

(f) *Cash contributions* means the recipient's cash outlay, including the outlay of money contributed to the recipient by third parties.

(g) *Closeout* means the process by which a Federal awarding agency determines that all applicable administrative actions and all required work of the award have been completed by the recipient and Federal awarding agency.

(h) *Contract* means a procurement contract under an award or subaward, and a procurement subcontract under a recipient's or subrecipient's contract.

(i) *Cost sharing or matching* means that portion of project or program costs not borne by the Federal Government.

(j) *Date of completion* means the date on which all work under an award is completed or the date on the award document, or any supplement or amendment thereto, on which Federal sponsorship ends.

(k) *Disallowed costs* means those charges to an award that the Federal

awarding agency determines to be unallowable, in accordance with the applicable Federal cost principles or other terms and conditions contained in the award.

(l) *Equipment* means tangible nonexpendable personal property including exempt property charged directly to the award having a useful life of more than one year and an acquisition cost of $5,000 or more per unit. However, consistent with recipient policy, lower limits may be established.

(m) *Excess property* means property under the control of any Federal awarding agency that, as determined by the head thereof, is no longer required for its needs or the discharge of its responsibilities.

(n) *Exempt property* means tangible personal property acquired in whole or in part with Federal funds, where the Federal awarding agency has statutory authority to vest title in the recipient without further obligation to the Federal Government. An example of exempt property authority is contained in the Federal Grant and Cooperative Agreement Act (31 U.S.C. 6306), for property acquired under an award to conduct basic or applied research by a non-profit institution of higher education or non-profit organization whose principal purpose is conducting scientific research.

(o) *Federal awarding agency* means the Federal agency that provides an award to the recipient. Except for the specific review requirements for deviations in § 19.4, for Department of Transportation (DOT) awards, it means the DOT operating administration or departmental office that made the award.

(p) *Federal funds authorized* means the total amount of Federal funds obligated by the Federal Government for use by the recipient. This amount may include any authorized carryover of unobligated funds from prior funding periods when permitted by agency regulations or agency implementing instructions.

(q) *Federal share* of real property, equipment, or supplies means that percentage of the property's acquisition costs and any improvement expenditures paid with Federal funds.

(r) *Funding period* means the period of time when Federal funding is available for obligation by the recipient.

(s) *Intangible property and debt instruments* means, but is not limited to, trademarks, copyrights, patents and patent applications and such property as loans, notes and other debt instruments, lease agreements, stock and other instruments of property ownership, whether considered tangible or intangible.

(t) *Obligations* means the amounts of orders placed, contracts and grants awarded, services received and similar transactions during a given period that require payment by the recipient during the same or a future period.

(u) *Outlays or expenditures* means charges made to the project or program. They may be reported on a cash or accrual basis. For reports prepared on a cash basis, outlays are the sum of cash disbursements for direct charges for goods and services, the amount of indirect expense charged, the value of third party in-kind contributions applied and the amount of cash advances and payments made to subrecipients. For reports prepared on an accrual basis, outlays are the sum of cash disbursements for direct charges for goods and services, the amount of indirect expense incurred, the value of in-kind contributions applied, and the net increase (or decrease) in the amounts owed by the recipient for goods and other property received, for services performed by employees, contractors, subrecipients and other payees and other amounts becoming owed under programs for which no current services or performance are required.

(v) *Personal property* means property of any kind except real property. It may be tangible, having physical existence, or intangible, having no physical existence, such as copyrights, patents, or securities.

(w) *Prior approval* means written approval by an authorized official evidencing prior consent.

(x) *Program income* means gross income earned by the recipient that is directly generated by a supported activity or earned as a result of the award (see exclusions in §§ 19.24 (e) and (h)). Program income includes, but is not

limited to, income from fees for services performed, the use or rental of real or personal property acquired under federally-funded projects, the sale of commodities or items fabricated under an award, license fees and royalties on patents and copyrights, and interest on loans made with award funds. Interest earned on advances of Federal funds is not program income. Except as otherwise provided in Federal awarding agency regulations or the terms and conditions of the award, program income does not include the receipt of principal on loans, rebates, credits, discounts, etc., or interest earned on any of them.

(y) *Project costs* means all allowable costs, as set forth in the applicable Federal cost principles, incurred by a recipient and the value of the contributions made by third parties in accomplishing the objectives of the award during the project period.

(z) *Project period* means the period established in the award document during which Federal sponsorship begins and ends.

(aa) *Property* means, unless otherwise stated, real property, equipment, intangible property and debt instruments.

(bb) *Real property* means land, including land improvements, structures and appurtenances thereto, but excludes movable machinery and equipment.

(cc) *Recipient* means an organization receiving financial assistance directly from Federal awarding agencies to carry out a project or program. The term includes public and private institutions of higher education, public and private hospitals, and other quasi-public and private non-profit organizations such as, but not limited to, community action agencies, research institutes, educational associations, and health centers. The term may include commercial organizations, foreign or international organizations (such as agencies of the United Nations) which are recipients, subrecipients, or contractors or subcontractors of recipients or subrecipients at the discretion of the Federal awarding agency. The term does not include government-owned contractor-operated facilities or research centers providing continued support for mission-oriented, large-scale programs that are government-owned or controlled, or are designated as federally-funded research and development centers.

(dd) *Research and development* means all research activities, both basic and applied, and all development activities that are supported at universities, colleges, and other non-profit institutions. ''Research'' is defined as a systematic study directed toward fuller scientific knowledge or understanding of the subject studied. ''Development'' is the systematic use of knowledge and understanding gained from research directed toward the production of useful materials, devices, systems, or methods, including design and development of prototypes and processes. The term research also includes activities involving the training of individuals in research techniques where such activities utilize the same facilities as other research and development activities and where such activities are not included in the instruction function.

(ee) *Small awards* means a grant or cooperative agreement not exceeding the small purchase threshold fixed at 41 U.S.C. 403(11) (currently $25,000).

(ff) *Subaward* means an award of financial assistance in the form of money, or property in lieu of money, made under an award by a recipient to an eligible subrecipient or by a subrecipient to a lower tier subrecipient. The term includes financial assistance when provided by any legal agreement, even if the agreement is called a contract, but does not include procurement of goods and services nor does it include any form of assistance which is excluded from the definition of ''award'' in paragraph (e) of this section.

(gg) *Subrecipient* means the legal entity to which a subaward is made and which is accountable to the recipient for the use of the funds provided. The term may include foreign or international organizations (such as agencies of the United Nations) at the discretion of the Federal awarding agency.

(hh) *Supplies* means all personal property excluding equipment, intangible property, and debt instruments as defined in this section, and inventions of a contractor conceived or first actually

reduced to practice in the performance of work under a funding agreement (''subject inventions''), as defined in 37 CFR part 401, ''Rights to Inventions Made by Nonprofit Organizations and Small Business Firms Under Government Grants, Contracts, and Cooperative Agreements.''

(ii) *Suspension* means an action by a Federal awarding agency that temporarily withdraws Federal sponsorship under an award, pending corrective action by the recipient or pending a decision to terminate the award by the Federal awarding agency. Suspension of an award is a separate action from suspension under Federal agency regulations implementing E.O.s 12549 and 12689, ''Debarment and Suspension.''

(jj) *Termination* means the cancellation of Federal sponsorship, in whole or in part, under an agreement at any time prior to the date of completion.

(kk) *Third party in-kind contributions* means the value of non-cash contributions provided by non-Federal third parties. Third party in-kind contributions may be in the form of real property, equipment, supplies and other expendable property, and the value of goods and services directly benefiting and specifically identifiable to the project or program.

(ll) *Unliquidated obligations*, for financial reports prepared on a cash basis, means the amount of obligations incurred by the recipient that have not been paid. For reports prepared on an accrued expenditure basis, they represent the amount of obligations incurred by the recipient for which an outlay has not been recorded.

(mm) *Unobligated balance* means the portion of the funds authorized by the Federal awarding agency that has not been obligated by the recipient and is determined by deducting the cumulative obligations from the cumulative funds authorized.

(nn) *Unrecovered indirect cost* means the difference between the amount awarded and the amount which could have been awarded under the recipient's approved negotiated indirect cost rate.

(oo) *Working capital advance* means a procedure whereby funds are advanced to the recipient to cover its estimated disbursement needs for a given initial period.

§ 19.3 Effect on other issuances.

For awards subject to this part, all administrative requirements of codified program regulations, program manuals, handbooks and other non-regulatory materials which are inconsistent with the requirements of this part are superseded, except to the extent they are required by statute, or authorized in accordance with the deviations provision in § 19.4.

§ 19.4 Deviations.

The Office of Management and Budget (OMB) may grant exceptions for classes of grants or recipients subject to the requirements of this part when exceptions are not prohibited by statute. However, in the interest of maximum uniformity, exceptions from the requirements of this part shall be permitted only in unusual circumstances. Federal awarding agencies may apply more restrictive requirements to a class of recipients when approved by OMB. All requests for class deviations shall be processed through the Assistant Secretary for Administration. Federal awarding agencies may apply less restrictive requirements when awarding small awards, except for those requirements which are statutory, subject to the concurrence of the Assistant Secretary for Administration. Exceptions on a case-by-case basis may also be made by Federal awarding agencies, with the concurrence of the Assistant Secretary for Administration to ensure conformance with Department of Transportation grant administration policies.

§ 19.5 Subawards.

Unless sections of this part specifically exclude subrecipients from coverage, the provisions of this part shall be applied to subrecipients performing work under awards if such subrecipients are institutions of higher education, hospitals or other non-profit organizations. State and local government subrecipients are subject to the provisions of 49 CFR part 18, ''Uniform Administrative Requirements for Grants and Cooperative Agreements to State and Local Governments.''

§ 19.6 Availability of material referenced in this part.

(a) Copies of Federal Transit Administration (FTA) documents identified in this part may be obtained by calling the FTA Administrative Services Division at (202) 366–4865.

(b) Copies of Federal Aviation Administration (FAA) documents identified in this part may be obtained by calling the FAA Program Guidance Branch at (202) 267–3831.

Subpart B—Pre-Award Requirements

§ 19.10 Purpose.

Sections 19.11 through 19.17 prescribes forms and instructions and other pre-award matters to be used in applying for Federal awards.

§ 19.11 Pre-award policies.

(a) *Use of grants and cooperative agreements, and contracts.* In each instance, the Federal awarding agency shall decide on the appropriate award instrument (i.e., grant, cooperative agreement, or contract). The Federal Grant and Cooperative Agreement Act (31 U.S.C. 6301–08) governs the use of grants, cooperative agreements and contracts. A grant or cooperative agreement shall be used only when the principal purpose of a transaction is to accomplish a public purpose of support or stimulation authorized by Federal statute. The statutory criterion for choosing between grants and cooperative agreements is that for the latter, ''substantial involvement is expected between the executive agency and the State, local government, or other recipient when carrying out the activity contemplated in the agreement.'' Contracts shall be used when the principal purpose is acquisition of property or services for the direct benefit or use of the Federal Government.

(b) *Public notice and priority setting.* Federal awarding agencies shall notify the public of its intended funding priorities for discretionary grant programs, unless funding priorities are established by Federal statute.

§ 19.12 Forms for applying for Federal assistance.

(a) Federal awarding agencies shall comply with the applicable report clearance requirements of 5 CFR part 1320, ''Controlling Paperwork Burdens on the Public,'' with regard to all forms used by the Federal awarding agency in place of or as a supplement to the Standard Form 424 (SF–424) series.

(b) Applicants shall use the SF–424 series or those forms and instructions prescribed by the Federal awarding agency.

(c) For Federal programs covered by E.O. 12372, ''Intergovernmental Review of Federal Programs,'' as implemented at 49 CFR part 17, Intergovernmental review of Department of Transportation programs and activities, the applicant shall complete the appropriate sections of the SF–424 (Application for Federal Assistance) indicating whether the application was subject to review by the State Single Point of Contact (SPOC). The name and address of the SPOC for a particular State can be obtained from the Federal awarding agency or the Catalog of Federal Domestic Assistance. The SPOC shall advise the applicant whether the program for which application is made has been selected by that State for review.

(d) Federal awarding agencies that do not use the SF–424 form should indicate whether the application is subject to review by the State under E.O. 12372.

§ 19.13 Debarment and suspension.

Federal awarding agencies and recipients shall comply with the nonprocurement debarment and suspension rule, 49 CFR part 29, ''Governmentwide Debarment and Suspension (Nonprocurement) and Governmentwide Requirements for Drug-Free Workplace (Grants),'' implementing E.O.s 12549 and 12689, ''Debarment and Suspension.'' This rule restricts subawards and contracts with certain parties that are debarred, suspended or otherwise excluded from or ineligible for participation in Federal assistance programs or activities.

§ 19.14 Special award conditions.

(a) Federal awarding agencies may impose additional requirements as needed, if an applicant or recipient:

(1) Has a history of poor performance,

(2) Is not financially stable,

(3) Has a management system that does not meet the standards prescribed in this part,

(4) Has not conformed to the terms and conditions of a previous award, or

(5) Is not otherwise responsible.

(b) Additional requirements may only be imposed provided that such applicant or recipient is notified in writing as to:

(1) The nature of the additional requirements,

(2) The reason why the additional requirements are being imposed,

(3) The nature of the corrective action needed,

(4) The time allowed for completing the corrective actions, and

(5) The method for requesting reconsideration of the additional requirements imposed.

(c) A copy of such notices shall be sent to the Assistant Secretary for Administration. Any special conditions shall be promptly removed once the conditions that prompted them have been corrected.

§ 19.15 Metric system of measurement.

The Metric Conversion Act, as amended by the Omnibus Trade and Competitiveness Act (15 U.S.C. 205), declares that the metric system is the preferred measurement system for U.S. trade and commerce. The Act requires each Federal agency to establish a date or dates in consultation with the Secretary of Commerce, when the metric system of measurement will be used in the agency's procurements, grants, and other business-related activities. Metric implementation may take longer where the use of the system is initially impractical or likely to cause significant inefficiencies in the accomplishment of federally-funded activities. Federal awarding agencies shall follow the provisions of E.O. 12770, ''Metric Usage in Federal Government Programs.''

§ 19.16 Resource Conservation and Recovery Act.

Under the Act, any State agency or agency of a political subdivision of a State which is using appropriated Federal funds must comply with section 6002. Section 6002 requires that preference be given in procurement programs to the purchase of specific products containing recycled materials identified in guidelines developed by the Environmental Protection Agency (EPA) (40 CFR parts 247–254). Accordingly, State and local institutions of higher education, hospitals, and nonprofit organizations that receive direct Federal awards or other Federal funds shall give preference in their procurement programs funded with Federal funds to the purchase of recycled products pursuant to the EPA guidelines.

§ 19.17 Certifications and representations.

Unless prohibited by statute or codified regulation, each Federal awarding agency is authorized and encouraged to allow recipients to submit certifications and representations required by statute, executive order, or regulation on an annual basis, if the recipients have ongoing and continuing relationships with the agency. Annual certifications and representations shall be signed by responsible officials with the authority to ensure recipients' compliance with the pertinent requirements.

Subpart C—Post-Award Requirements

FINANCIAL AND PROGRAM MANAGEMENT

§ 19.20 Purpose of financial and program management.

Sections 19.21 through 19.28 prescribe standards for financial management systems, methods for making payments and rules for: satisfying cost sharing and matching requirements, accounting for program income, budget revision approvals, making audits, determining allowability of cost, and establishing fund availability.

§ 19.21 Standards for financial management systems.

(a) Federal awarding agencies shall require recipients to relate financial

data to performance data and develop unit cost information whenever practical.

(b) Recipients' financial management systems shall provide for the following.

(1) Accurate, current and complete disclosure of the financial results of each federally-sponsored project or program in accordance with the reporting requirements set forth in § 19.52. If a Federal awarding agency requires reporting on an accrual basis from a recipient that maintains its records on other than an accrual basis, the recipient shall not be required to establish an accrual accounting system. These recipients may develop such accrual data for its reports on the basis of an analysis of the documentation on hand.

(2) Records that identify adequately the source and application of funds for federally-sponsored activities. These records shall contain information pertaining to Federal awards, authorizations, obligations, unobligated balances, assets, outlays, income and interest.

(3) Effective control over and accountability for all funds, property and other assets. Recipients shall adequately safeguard all such assets and assure they are used solely for authorized purposes.

(4) Comparison of outlays with budget amounts for each award. Whenever appropriate, financial information should be related to performance and unit cost data.

(5) Written procedures to minimize the time elapsing between the transfer of funds to the recipient from the U.S. Treasury and the issuance or redemption of checks, warrants or payments by other means for program purposes by the recipient. To the extent that the provisions of the Cash Management Improvement Act (CMIA) (Pub. L. 101–453) govern, payment methods of State agencies, instrumentalities, and fiscal agents shall be consistent with CMIA Treasury-State Agreements or the CMIA default procedures codified at 31 CFR part 205, ''Withdrawal of Cash from the Treasury for Advances under Federal Grant and Other Programs.''

(6) Written procedures for determining the reasonableness, allocability and allowability of costs in accordance with the provisions of the applicable Federal cost principles and the terms and conditions of the award.

(7) Accounting records including cost accounting records that are supported by source documentation.

(c) Where the Federal Government guarantees or insures the repayment of money borrowed by the recipient, the Federal awarding agency, at its discretion, may require adequate bonding and insurance if the bonding and insurance requirements of the recipient are not deemed adequate to protect the interest of the Federal Government.

(d) The Federal awarding agency may require adequate fidelity bond coverage where the recipient lacks sufficient coverage to protect the Federal Government's interest.

(e) Where bonds are required in the situations described above, the bonds shall be obtained from companies holding certificates of authority as acceptable sureties, as prescribed in 31 CFR part 223, ''Surety Companies Doing Business with the United States.''

§ 19.22 Payment.

(a) Payment methods shall minimize the time elapsing between the transfer of funds from the United States Treasury and the issuance or redemption of checks, warrants, or payment by other means by the recipients. Payment methods of State agencies or instrumentalities shall be consistent with Treasury-State CMIA agreements or default procedures codified at 31 CFR part 205.

(b)(1) Recipients are to be paid in advance, provided they maintain or demonstrate the willingness to maintain:

(i) Written procedures that minimize the time elapsing between the transfer of funds and disbursement by the recipient, and

(ii) Financial management systems that meet the standards for fund control and accountability as established in section § 19.21.

(2) Cash advances to a recipient organization shall be limited to the minimum amounts needed and be timed to be in accordance with the actual, immediate cash requirements of the recipient organization in carrying out the purpose of the approved program or project. The timing and amount of cash

advances shall be as close as is administratively feasible to the actual disbursements by the recipient organization for direct program or project costs and the proportionate share of any allowable indirect costs.

(c) Whenever possible, advances shall be consolidated to cover anticipated cash needs for all awards made by the Federal awarding agency to the recipient.

(1) Advance payment mechanisms include, but are not limited to, Treasury check and electronic funds transfer.

(2) Advance payment mechanisms are subject to 31 CFR part 205.

(3) Recipients shall be authorized to submit requests for advances and reimbursements at least monthly when electronic fund transfers are not used.

(d) Requests for Treasury check advance payment shall be submitted on SF–270, ''Request for Advance or Reimbursement,'' or other forms as may be authorized by OMB. This form is not to be used when Treasury check advance payments are made to the recipient automatically through the use of a predetermined payment schedule or if precluded by special Federal awarding agency instructions for electronic funds transfer.

(e) Reimbursement is the preferred method when the requirements in paragraph (b) cannot be met. Federal awarding agencies may also use this method on any construction agreement, or if the major portion of the construction project is accomplished through private market financing or Federal loans, and the Federal assistance constitutes a minor portion of the project.

(1) When the reimbursement method is used, the Federal awarding agency shall make payment within 30 days after receipt of the billing, unless the billing is improper.

(2) Recipients shall be authorized to submit request for reimbursement at least monthly when electronic funds transfers are not used.

(f) If a recipient cannot meet the criteria for advance payments and the Federal awarding agency has determined that reimbursement is not feasible because the recipient lacks sufficient working capital, the Federal awarding agency may provide cash on a working capital advance basis. Under this procedure, the Federal awarding agency shall advance cash to the recipient to cover its estimated disbursement needs for an initial period generally geared to the awardee's disbursing cycle. Thereafter, the Federal awarding agency shall reimburse the recipient for its actual cash disbursements. The working capital advance method of payment shall not be used for recipients unwilling or unable to provide timely advances to their subrecipient to meet the subrecipient's actual cash disbursements.

(g) To the extent available, recipients shall disburse funds available from repayments to and interest earned on a revolving fund, program income, rebates, refunds, contract settlements, audit recoveries and interest earned on such funds before requesting additional cash payments.

(h) Unless otherwise required by statute, Federal awarding agencies shall not withhold payments for proper charges made by recipients at any time during the project period unless the conditions in paragraphs (h)(1) or (2) of this section apply.

(1) A recipient has failed to comply with the project objectives, the terms and conditions of the award, or Federal reporting requirements.

(2) The recipient or subrecipient is delinquent in a debt to the United States as defined in OMB Circular A–129, ''Managing Federal Credit Programs.'' Under such conditions, the Federal awarding agency may, upon reasonable notice, inform the recipient that payments shall not be made for obligations incurred after a specified date until the conditions are corrected or the indebtedness to the Federal Government is liquidated.

(i) Standards governing the use of banks and other institutions as depositories of funds advanced under awards are as follows.

(1) Except for situations described in paragraph (i)(2) of this section, Federal awarding agencies shall not require separate depository accounts for funds provided to a recipient or establish any eligibility requirements for depositories for funds provided to a recipient.

However, recipients must be able to account for the receipt, obligation and expenditure of funds.

(2) Advances of Federal funds shall be deposited and maintained in insured accounts whenever possible.

(j) Consistent with the national goal of expanding the opportunities for women-owned and minority-owned business enterprises, recipients shall be encouraged to use women-owned and minority-owned banks (a bank which is owned at least 50 percent by women or minority group members).

(k) Recipients shall maintain advances of Federal funds in interest bearing accounts, unless the conditions in paragraphs (k)(1), (2) or (3) of this section apply.

(1) The recipient receives less than $120,000 in Federal awards per year.

(2) The best reasonably available interest bearing account would not be expected to earn interest in excess of $250 per year on Federal cash balances.

(3) The depository would require an average or minimum balance so high that it would not be feasible within the expected Federal and non-Federal cash resources.

(l) For those entities where CMIA and its implementing regulations do not apply, interest earned on Federal advances deposited in interest bearing accounts shall be remitted annually to Department of Health and Human Services, Payment Management System, P.O. Box 6021, Rockville, MD 20852. Interest amounts up to $250 per year may be retained by the recipient for administrative expense. In keeping with Electric Funds Transfer rules, (31 CFR part 206), interest should be remitted to the HHS Payment Management System through an electric medium such as the FEDWIRE Deposit system. Recipients which do not have this capability should use a check. State universities and hospitals shall comply with CMIA, as it pertains to interest. If an entity subject to CMIA uses its own funds to pay pre-award costs for discretionary awards without prior written approval from the Federal awarding agency, it waives its right to recover the interest under CMIA.

(m) Except as noted elsewhere in this part, only the following forms shall be authorized for the recipients in requesting advances and reimbursements. Federal agencies shall not require more than an original and two copies of these forms.

(1) SF–270, Request for Advance or Reimbursement. Each Federal awarding agency shall adopt the SF–270 as a standard form for all nonconstruction programs when electronic funds transfer or predetermined advance methods are not used. Federal awarding agencies, however, have the option of using this form for construction programs in lieu of the SF–271, ''Outlay Report and Request for Reimbursement for Construction Programs.''

(2) SF–271, Outlay Report and Request for Reimbursement for Construction Programs. Each Federal awarding agency shall adopt the SF–271 as the standard form to be used for requesting reimbursement for construction programs. However, a Federal awarding agency may substitute the SF–270 when the Federal awarding agency determines that it provides adequate information to meet Federal needs.

§ 19.23 Cost sharing or matching.

(a) All contributions, including cash and third party in-kind, shall be accepted as part of the recipient's cost sharing or matching when such contributions meet all of the following criteria.

(1) Are verifiable from the recipient's records.

(2) Are not included as contributions for any other federally-assisted project or program.

(3) Are necessary and reasonable for proper and efficient accomplishment of project or program objectives.

(4) Are allowable under the applicable cost principles.

(5) Are not paid by the Federal Government under another award, except where authorized by Federal statute to be used for cost sharing or matching.

(6) Are provided for in the approved budget when required by the Federal awarding agency.

(7) Conform to other provisions of this part, as applicable.

(b) Unrecovered indirect costs may be included as part of cost sharing or matching only with the prior approval of the Federal awarding agency.

(c) Values for recipient contributions of services and property shall be established in accordance with the applicable cost principles. If a Federal awarding agency authorizes recipients to donate buildings or land for construction/facilities acquisition projects or long-term use, the value of the donated property for cost sharing or matching shall be the lesser of (1) or (2).

(1) The certified value of the remaining life of the property recorded in the recipient's accounting records at the time of donation.

(2) The current fair market value. However, when there is sufficient justification, the Federal awarding agency may approve the use of the current fair market value of the donated property, even if it exceeds the certified value at the time of donation to the project.

(d) Volunteer services furnished by professional and technical personnel, consultants, and other skilled and unskilled labor may be counted as cost sharing or matching if the service is an integral and necessary part of an approved project or program. Rates for volunteer services shall be consistent with those paid for similar work in the recipient's organization. In those instances in which the required skills are not found in the recipient organization, rates shall be consistent with those paid for similar work in the labor market in which the recipient competes for the kind of services involved. In either case, paid fringe benefits that are reasonable, allowable, and allocable may be included in the valuation.

(e) When an employer other than the recipient furnishes the services of an employee, these services shall be valued at the employee's regular rate of pay (plus an amount of fringe benefits that are reasonable, allowable, and allocable, but exclusive of overhead costs), provided these services are in the same skill for which the employee is normally paid.

(f) Donated supplies may include such items as expendable equipment, office supplies, laboratory supplies or workshop and classroom supplies. Value assessed to donated supplies included in the cost sharing or matching share shall be reasonable and shall not exceed the fair market value of the property at the time of the donation.

(g) The method used for determining cost sharing or matching for donated equipment, buildings and land for which title passes to the recipient may differ according to the purpose of the award, if the conditions in paragraph (g)(1) or (2) of this section apply.

(1) If the purpose of the award is to assist the recipient in the acquisition of equipment, buildings or land, the total value of the donated property may be claimed as cost sharing or matching.

(2) If the purpose of the award is to support activities that require the use of equipment, buildings or land, normally only depreciation or use charges for equipment and buildings may be made. However, the full value of equipment or other capital assets and fair rental charges for land may be allowed, provided that the Federal awarding agency has approved the charges.

(h) The value of donated property shall be determined in accordance with the usual accounting policies of the recipient, with the following qualifications.

(1) The value of donated land and buildings shall not exceed its fair market value at the time of donation to the recipient as established by an independent appraiser (e.g., certified real property appraiser or General Services Administration representative) and certified by a responsible official of the recipient.

(2) The value of donated equipment shall not exceed the fair market value of equipment of the same age and condition at the time of donation.

(3) The value of donated space shall not exceed the fair rental value of comparable space as established by an independent appraisal of comparable space and facilities in a privately-owned building in the same locality.

(4) The value of loaned equipment shall not exceed its fair rental value.

(5) The following requirements pertain to the recipient's supporting records for in-kind contributions from third parties.

(i) Volunteer services shall be documented and, to the extent feasible, supported by the same methods used by the recipient for its own employees.

(ii) The basis for determining the valuation for personal service, material, equipment, buildings and land shall be documented.

(iii) Section 18(e) of the Federal Transit Act, as amended, (49 U.S.C. app. 1614(e)) provides that the Federal share for operating assistance shall not exceed 50 percent of the net cost. At least 50 percent of the remainder (the local share) must be derived from sources other than Federal funds or revenues of the system; and up to half of the local share may be derived from other Federal funds. For purposes of determining local share for section 18 operating assistance, the term ''Federal funds or revenues'' does not include funds received pursuant to a service agreement with a State or local service agency or a private social service organization. Nonregulatory guidance is contained in FTA Circular 9040.1B, section 18 Program Guidance and Grant Application Instructions, Chapter III, section 7.

§ 19.24 Program income.

(a) Federal awarding agencies shall apply the standards set forth in this section in requiring recipient organizations to account for program income related to projects financed in whole or in part with Federal funds.

(b) Except as provided in paragraph (h) of this section, program income earned during the project period shall be retained by the recipient and, in accordance with Federal awarding agency regulations or the terms and conditions of the award, shall be used in one or more of the ways listed in the following.

(1) Added to funds committed to the project by the Federal awarding agency and recipient and used to further eligible project or program objectives.

(2) Used to finance the non-Federal share of the project or program.

(3) Deducted from the total project or program allowable cost in determining the net allowable costs on which the Federal share of costs is based.

(c) When an agency authorizes the disposition of program income as described in paragraph (b)(1) or (b)(2) of this section, program income in excess of any limits stipulated shall be used in accordance with paragraph (b)(3) of this section.

(d) In the event that the Federal awarding agency does not specify in its regulations or the terms and conditions of the award how program income is to be used, paragraph (b)(3) of this section shall apply automatically to all projects or programs except research. For awards that support research, paragraph (b)(1) of this section shall apply automatically unless the awarding agency indicates in the terms and conditions another alternative on the award or the recipient is subject to special award conditions, as indicated in § 19.14.

(e) Unless Federal awarding agency regulations or the terms and conditions of the award provide otherwise, recipients shall have no obligation to the Federal Government regarding program income earned after the end of the project period.

(f) If authorized by Federal awarding agency regulations or the terms and conditions of the award, costs incident to the generation of program income may be deducted from gross income to determine program income, provided these costs have not been charged to the award.

(g) Proceeds from the sale of property shall be handled in accordance with the requirements of the Property Standards (See §§ 19.30 through 19.37).

(h) Unless Federal awarding agency regulations or the terms and condition of the award provide otherwise, recipients shall have no obligation to the Federal Government with respect to program income earned from license fees and royalties for copyrighted material, patents, patent applications, trademarks, and inventions produced under an award. However, Patent and Trademark Amendments (35 U.S.C. 18) apply to inventions made under an experimental, developmental, or research award.

(i) Section 4(a) of the Federal Transit Act, as amended, (49 U.S.C. app. 1603(a)) allows FTA recipients to retain program income for allowable capital or operating expenses, but program income may not be used to refund or reduce the local share of a grant. The section 16 and 18 programs, however, operate differently. Under the special

authority to set appropriate terms and conditions for the section 16(b)(2) program, program income in the form of contract service revenue may be used as local share without a proportionate reduction in the Federal share. Similarly, section 18 allows the use of program income in the form of contract service revenue as local share without requiring a proportionate reduction in the Federal share. Grantees must account for program income in their accounting systems, which are subject to audit. The accounting system must be capable of identifying program income and the purpose for which it was used. Nonregulatory guidance is contained in FTA notice N 5.5005.1, Guidance on Program Income and Sales Proceeds.

§ 19.25 Revision of budget and program plans.

(a) The budget plan is the financial expression of the project or program as approved during the award process. It may include either the Federal and non-Federal share, or only the Federal share, depending upon Federal awarding agency requirements. It shall be related to performance for program evaluation purposes whenever appropriate.

(b) Recipients are required to report deviations from budget and program plans, and request prior approvals for budget and program plan revisions, in accordance with this section.

(c) For nonconstruction awards, recipients shall request prior approvals from Federal awarding agencies for one or more of the following program or budget related reasons.

(1) Change in the scope or the objective of the project or program (even if there is no associated budget revision requiring prior written approval).

(2) Change in a key person specified in the application or award document.

(3) The absence for more than three months, or a 25 percent reduction in time devoted to the project, by the approved project director or principal investigator.

(4) The need for additional Federal funding.

(5) The transfer of amounts budgeted for indirect costs to absorb increases in direct costs, or vice versa, if approval is required by the Federal awarding agency.

(6) The inclusion, unless waived by the Federal awarding agency, of costs that require prior approval in accordance with OMB Circular A–21, ''Cost Principles for Institutions of Higher Education,'' OMB Circular A–122, ''Cost Principles for Non-Profit Organizations,'' or 45 CFR part 74 Appendix E, ''Principles for Determining Costs Applicable to Research and Development under Grants and Contracts with Hospitals,'' or 48 CFR part 31, ''Contract Cost Principles and Procedures,'' as applicable.

(7) The transfer of funds allotted for training allowances (direct payment to trainees) to other categories of expense.

(8) Unless described in the application and funded in the approved awards, the subaward, transfer or contracting out of any work under an award. This provision does not apply to the purchase of supplies, material, equipment or general support services.

(d) No other prior approval requirements for specific items may be imposed unless a deviation has been approved by OMB.

(e) Except for requirements listed in paragraphs (c)(1) and (c)(4) of this section, Federal awarding agencies are authorized, at their option, to waive cost-related and administrative prior written approvals required by this part and OMB Circulars A–21 and A–122. Such waivers may include authorizing recipients to do any one or more of the following:

(1) Incur pre-award costs 90 calendar days prior to award or more than 90 calendar days with the prior approval of the Federal awarding agency. All pre-award costs are incurred at the recipient's risk (i.e., the Federal awarding agency is under no obligation to reimburse such costs if for any reason the recipient does not receive an award or if the award is less than anticipated and inadequate to cover such costs).

(2) Initiate a one-time extension of the expiration date of the award of up to 12 months unless one or more of the following conditions apply. For one-time extensions, the recipient must notify the Federal awarding agency in writing with the supporting reasons and revised expiration date at least 10

days before the expiration date specified in the award. This one-time extension may not be exercised merely for the purpose of using unobligated balances.

(i) The terms and conditions of award prohibit the extension.

(ii) The extension requires additional Federal funds.

(iii) The extension involves any change in the approved objectives or scope of the project.

(3) Carry forward unobligated balances to subsequent funding periods.

(4) For awards that support research, unless the Federal awarding agency provides otherwise in the award or in the agency's regulations, the prior approval requirements described in paragraph (e) of this section are automatically waived (i.e., recipients need not obtain such prior approvals) unless one of the conditions included in paragraph (e)(2) of this section applies.

(f) The Federal awarding agency may, at its option, restrict the transfer of funds among direct cost categories or programs, functions and activities for awards in which the Federal share of the project exceeds $100,000 and the cumulative amount of such transfers exceeds or is expected to exceed 10 percent of the total budget as last approved by the Federal awarding agency. No Federal awarding agency shall permit a transfer that would cause any Federal appropriation or part thereof to be used for purposes other than those consistent with the original intent of the appropriation.

(g) All other changes to nonconstruction budgets, except for the changes described in paragraph (j) of this section, do not require prior approval.

(h) For construction awards, recipients shall request prior written approval promptly from Federal awarding agencies for budget revisions whenever the conditions in paragraphs (h) (1), (2) or (3) of this section apply.

(1) The revision results from changes in the scope or the objective of the project or program.

(2) The need arises for additional Federal funds to complete the project.

(3) A revision is desired which involves specific costs for which prior written approval requirements may be imposed consistent with applicable OMB cost principles listed in § 19.27.

(i) No other prior approval requirements for specific items may be imposed unless a deviation has been approved by OMB.

(j) When a Federal awarding agency makes an award that provides support for both construction and nonconstruction work, the Federal awarding agency may require the recipient to request prior approval from the Federal awarding agency before making any fund or budget transfers between the two types of work supported.

(k) For both construction and nonconstruction awards, Federal awarding agencies shall require recipients to notify the Federal awarding agency in writing promptly whenever the amount of Federal authorized funds is expected to exceed the needs of the recipient for the project period by more than $5,000 or five percent of the Federal award, whichever is greater. This notification shall not be required if an application for additional funding is submitted for a continuation award.

(l) When requesting approval for budget revisions, recipients shall use the budget forms that were used in the application unless the Federal awarding agency indicates a letter of request suffices.

(m) Within 30 calendar days from the date of receipt of the request for budget revisions, Federal awarding agencies shall review the request and notify the recipient whether the budget revisions have been approved. If the revision is still under consideration at the end of 30 calendar days, the Federal awarding agency shall inform the recipient in writing of the date when the recipient may expect the decision.

§ 19.26 Non-Federal audits.

(a) Recipients and subrecipients that are institutions of higher education or other non-profit organizations (including hospitals) shall be subject to the audit requirements contained in the Single Audit Act Amendments of 1996 (31 U.S.C. 7501–7507) and revised OMB Circular A–133, ''Audits of States, Local Governments, and Non-Profit Organizations.''

(b) State and local governments shall be subject to the audit requirements

contained in the Single Audit Act Amendments of 1996 (31 U.S.C. 7501–7507) and revised OMB Circular A–133, ''Audits of States, Local Governments, and Non-Profit Organizations.''

(c) For-profit hospitals not covered by the audit provisions of revised OMB Circular A–133 shall be subject to the audit requirements of the Federal awarding agencies.

(d) Commercial organizations shall be subject to the audit requirements of the Federal awarding agency or the prime recipient as incorporated into the award document.

[59 FR 15639, Apr. 4, 1994, as amended at 62 FR 45939, 45947, Aug. 29, 1997]

§ 19.27 Allowable costs.

For each kind of recipient, there is a set of Federal principles for determining allowable costs. Allowability of costs shall be determined in accordance with the cost principles applicable to the entity incurring the costs. Thus, allowability of costs incurred by State, local or federally-recognized Indian tribal governments is determined in accordance with the provisions of OMB Circular A–87, ''Cost Principles for State and Local Governments.'' The allowability of costs incurred by non-profit organizations is determined in accordance with the provisions of OMB Circular A–122, ''Cost Principles for Non-Profit Organizations.'' The allowability of costs incurred by institutions of higher education is determined in accordance with the provisions of OMB Circular A–21, ''Cost Principles for Educational Institutions.'' The allowability of costs incurred by hospitals is determined in accordance with the provisions of Appendix E of 45 CFR part 74, ''Principles for Determining Costs Applicable to Research and Development Under Grants and Contracts with Hospitals.'' The allowability of costs incurred by commercial organizations and those non-profit organizations listed in Attachment C to Circular A–122 is determined in accordance with the provisions of the Federal Acquisition Regulation (FAR) at 48 CFR part 31.

§ 19.28 Period of availability of funds.

Where a funding period is specified, a recipient may charge to the grant only allowable costs resulting from obligations incurred during the funding period and any pre-award costs authorized by the Federal awarding agency.

PROPERTY STANDARDS

§ 19.30 Purpose of property standards.

(a) Sections 19.31 through 19.37 set forth uniform standards governing management and disposition of property furnished by the Federal Government whose cost was charged to a project supported by a Federal award. Federal awarding agencies shall require recipients to observe these standards under awards and shall not impose additional requirements, unless specifically required by Federal statute. The recipient may use its own property management standards and procedures provided it observes the provisions of §§ 19.31 through 19.37.

(b) Transfer of capital assets. Section 12(k) of the Federal Transit Act, as amended, (49 U.S.C. app. 1608(k)) allows the transfer without compensation of real property (including land) and equipment acquired under the Act for another public purpose under certain conditions. Procedures to allow these transfers have not been issued.

§ 19.31 Insurance coverage.

Recipients shall, at a minimum, provide the equivalent insurance coverage for real property and equipment acquired with Federal funds as provided to property owned by the recipient. Federally-owned property need not be insured unless required by the terms and conditions of the award.

§ 19.32 Real property.

Each Federal awarding agency shall prescribe requirements for recipients concerning the use and disposition of real property acquired in whole or in part under awards. Unless otherwise provided by statute, such requirements, at a minimum, shall contain the following.

(a) Title to real property shall vest in the recipient subject to the condition that the recipient shall use the real property for the authorized purpose of the project as long as it is needed and shall not encumber the property without approval of the Federal awarding agency.

(b) The recipient shall obtain written approval by the Federal awarding agency for the use of real property in other federally-sponsored projects when the recipient determines that the property is no longer needed for the purpose of the original project. Use in other projects shall be limited to those under federally-sponsored projects (i.e., awards) or programs that have purposes consistent with those authorized for support by the Department of Transportation.

(c) When the real property is no longer needed as provided in paragraphs (a) and (b) of this section, the recipient shall request disposition instructions from the Federal awarding agency or its successor Federal awarding agency. The Federal awarding agency shall observe one or more of the following disposition instructions.

(1) The recipient may be permitted to retain title without further obligation to the Federal Government after it compensates the Federal Government for that percentage of the current fair market value of the property attributable to the Federal participation in the project.

(2) The recipient may be directed to sell the property under guidelines provided by the Federal awarding agency and pay the Federal Government for that percentage of the current fair market value of the property attributable to the Federal participation in the project (after deducting actual and reasonable selling and fix-up expenses, if any, from the sales proceeds). When the recipient is authorized or required to sell the property, proper sales procedures shall be established that provide for competition to the extent practicable and result in the highest possible return.

(3) The recipient may be directed to transfer title to the property to the Federal Government or to an eligible third party provided that, in such cases, the recipient shall be entitled to compensation for its attributable percentage of the current fair market value of the property.

§ 19.33 Federally-owned and exempt property.

(a) *Federally-owned property*. (1) Title to federally-owned property remains vested in the Federal Government. Recipients shall submit annually an inventory listing of federally-owned property in their custody to the Federal awarding agency. Upon completion of the award or when the property is no longer needed, the recipient shall report the property to the Federal awarding agency for further Federal agency utilization.

(2) If the Federal awarding agency has no further need for the property, it shall be declared excess and reported to the General Services Administration, unless the Federal awarding agency has statutory authority to dispose of the property by alternative methods (e.g., the authority provided by the Federal Technology Transfer Act (15 U.S.C. 3710(I)) to donate research equipment to educational and non-profit organizations in accordance with E.O. 12821, ''Improving Mathematics and Science Education in Support of the National Education Goals.'') Appropriate instructions shall be issued to the recipient by the Federal awarding agency.

(b) *Exempt property*. When statutory authority exists, the Federal awarding agency has the option to vest title to property acquired with Federal funds in the recipient without further obligation to the Federal Government and under conditions the Federal awarding agency considers appropriate. Such property is ''exempt property.'' Should a Federal awarding agency not establish conditions, title to exempt property upon acquisition shall vest in the recipient without further obligation to the Federal Government.

§ 19.34 Equipment.

(a) Title to equipment acquired by a recipient with Federal funds shall vest in the recipient, subject to conditions of this section.

(b) The recipient shall not use equipment acquired with Federal funds to provide services to non-Federal outside organizations for a fee that is less than private companies charge for equivalent services, unless specifically authorized by Federal statute, for as long as the Federal Government retains an interest in the equipment.

(c) The recipient shall use the equipment in the project or program for

which it was acquired as long as needed, whether or not the project or program continues to be supported by Federal funds and shall not encumber the property without approval of the Federal awarding agency. When no longer needed for the original project or program, the recipient shall use the equipment in connection with its other federally-sponsored activities, in the following order of priority:

(1) Activities sponsored by the Federal awarding agency which funded the original project, then

(2) Activities sponsored by other Federal awarding agencies.

(d) During the time that equipment is used on the project or program for which it was acquired, the recipient shall make it available for use on other projects or programs if such other use will not interfere with the work on the project or program for which the equipment was originally acquired. First preference for such other use shall be given to other projects or programs sponsored by the Federal awarding agency that financed the equipment; second preference shall be given to projects or programs sponsored by other Federal awarding agencies. If the equipment is owned by the Federal Government, use on other activities not sponsored by the Federal Government shall be permissible if authorized by the Federal awarding agency. User charges shall be treated as program income.

(e) When acquiring replacement equipment, the recipient may use the equipment to be replaced as trade-in or sell the equipment and use the proceeds to offset the costs of the replacement equipment subject to the approval of the Federal awarding agency.

(f) The recipient's property management standards for equipment acquired with Federal funds and federally-owned equipment shall include all of the following.

(1) Equipment records shall be maintained accurately and shall include the following information.

(i) A description of the equipment.

(ii) Manufacturer's serial number, model number, Federal stock number, national stock number, or other identification number.

(iii) Source of the equipment, including the award number.

(iv) Whether title vests in the recipient or the Federal Government.

(v) Acquisition date (or date received, if the equipment was furnished by the Federal Government) and cost.

(vi) Information from which one can calculate the percentage of Federal participation in the cost of the equipment (not applicable to equipment furnished by the Federal Government).

(vii) Location and condition of the equipment and the date the information was reported.

(viii) Unit acquisition cost.

(ix) Ultimate disposition data, including date of disposal and sales price or the method used to determine current fair market value where a recipient compensates the Federal awarding agency for its share.

(2) Equipment owned by the Federal Government shall be identified to indicate Federal ownership.

(3) A physical inventory of equipment shall be taken and the results reconciled with the equipment records at least once every two years. Any differences between quantities determined by the physical inspection and those shown in the accounting records shall be investigated to determine the causes of the difference. The recipient shall, in connection with the inventory, verify the existence, current utilization, and continued need for the equipment.

(4) A control system shall be in effect to insure adequate safeguards to prevent loss, damage, or theft of the equipment. Any loss, damage, or theft of equipment shall be investigated and fully documented; if the equipment was owned by the Federal Government, the recipient shall promptly notify the Federal awarding agency.

(5) Adequate maintenance procedures shall be implemented to keep the equipment in good condition.

(6) Where the recipient is authorized or required to sell the equipment, proper sales procedures shall be established which provide for competition to the extent practicable and result in the highest possible return.

(g) When the recipient no longer needs the equipment, the equipment

may be used for other activities in accordance with the following standards. For equipment with a current per unit fair market value of $5,000 or more, the recipient may retain the equipment for other uses provided that compensation is made to the original Federal awarding agency or its successor. The amount of compensation shall be computed by applying the percentage of Federal participation in the cost of the original project or program to the current fair market value of the equipment. If the recipient has no need for the equipment, the recipient shall request disposition instructions from the Federal awarding agency. The Federal awarding agency shall determine whether the equipment can be used to meet the agency's requirements. If no requirement exists within that agency, the availability of the equipment shall be reported to the General Services Administration by the Federal awarding agency to determine whether a requirement for the equipment exists in other Federal agencies. The Federal awarding agency shall issue instructions to the recipient no later than 120 calendar days after the recipient's request and the following procedures shall govern.

(1) If so instructed or if disposition instructions are not issued within 120 calendar days after the recipient's request, the recipient shall sell the equipment and reimburse the Federal awarding agency an amount computed by applying to the sales proceeds the percentage of Federal participation in the cost of the original project or program. However, the recipient shall be permitted to deduct and retain from the Federal share $500 or ten percent of the proceeds, whichever is less, for the recipient's selling and handling expenses.

(2) If the recipient is instructed to ship the equipment elsewhere, the recipient shall be reimbursed by the Federal Government by an amount which is computed by applying the percentage of the recipient's participation in the cost of the original project or program to the current fair market value of the equipment, plus any reasonable shipping or interim storage costs incurred.

(3) If the recipient is instructed to otherwise dispose of the equipment, the recipient shall be reimbursed by the Federal awarding agency for such costs incurred in its disposition.

(4) The Federal awarding agency may reserve the right to transfer the title to the Federal Government or to a third party named by the Federal Government when such third party is otherwise eligible under existing statutes. Such transfer shall be subject to the following standards.

(i) The equipment shall be appropriately identified in the award or otherwise made known to the recipient in writing.

(ii) The Federal awarding agency shall issue disposition instructions within 120 calendar days after receipt of a final inventory. The final inventory shall list all equipment acquired with grant funds and federally-owned equipment. If the Federal awarding agency fails to issue disposition instructions within the 120 calendar day period, the recipient shall apply the standards of this section, as appropriate.

(iii) When the Federal awarding agency exercises its right to take title, the equipment shall be subject to the provisions for federally-owned equipment.

§ 19.35 Supplies and other expendable property.

(a) Title to supplies and other expendable property shall vest in the recipient upon acquisition. If there is a residual inventory of unused supplies exceeding $5000 in total aggregate value upon termination or completion of the project or program and the supplies are not needed for any other federally-sponsored project or program, the recipient shall retain the supplies for use on non-Federal sponsored activities or sell them, but shall, in either case, compensate the Federal Government for its share. The amount of compensation shall be computed in the same manner as for equipment.

(b) The recipient shall not use supplies acquired with Federal funds to provide services to non-Federal outside organizations for a fee that is less than private companies charge for equivalent services, unless specifically authorized by Federal statute as long as

the Federal Government retains an interest in the supplies.

§ 19.36 Intangible property.

(a) The recipient may copyright any work that is subject to copyright and was developed, or for which ownership was purchased, under an award. The Federal awarding agency(ies) reserve a royalty-free, nonexclusive and irrevocable right to reproduce, publish, or otherwise use the work for Federal purposes, and to authorize others to do so.

(b) Recipients are subject to applicable regulations governing patents and inventions, including government-wide regulations issued by the Department of Commerce at 37 CFR part 401, ''Rights to Inventions Made by Nonprofit Organizations and Small Business Firms Under Government Grants, Contracts and Cooperative Agreements.''

(c) Unless waived by the Federal awarding agency, the Federal Government has the right to the following:

(1) Obtain, reproduce, publish or otherwise use the data first produced under an award.

(2) Authorize others to receive, reproduce, publish, or otherwise use such data for Federal purposes.

(d) Title to intangible property and debt instruments acquired under an award or subaward vests upon acquisition in the recipient. The recipient shall use that property for the originally-authorized purpose, and the recipient shall not encumber the property without approval of the Federal awarding agency. When no longer needed for the originally authorized purpose, disposition of the intangible property shall occur in accordance with the provisions of paragraph § 19.34(g).

§ 19.37 Property trust relationship.

Real property, equipment, intangible property and debt instruments that are acquired or improved with Federal funds shall be held in trust by the recipient as trustee for the beneficiaries of the project or program under which the property was acquired or improved. Agencies may require recipients to record liens or other appropriate notices of record to indicate that personal or real property has been acquired or improved with Federal funds and that use and disposition conditions apply to the property.

PROCUREMENT STANDARDS

§ 19.40 Purpose of procurement standards.

Sections 19.41 through 19.48 set forth standards for use by recipients in establishing procedures for the procurement of supplies and other expendable property, equipment, real property and other services with Federal funds. These standards are furnished to ensure that such materials and services are obtained in an effective manner and in compliance with the provisions of applicable Federal statutes and executive orders. No additional procurement standards or requirements shall be imposed by the Federal awarding agencies upon recipients, unless specifically required by Federal statute or executive order or approved by OMB.

§ 19.41 Recipient responsibilities.

The standards contained in this section do not relieve the recipient of the contractual responsibilities arising under its contract(s). The recipient is the responsible authority, without recourse to the Federal awarding agency, regarding the settlement and satisfaction of all contractual and administrative issues arising out of procurements entered into in support of an award or other agreement. This includes disputes, claims, protests of award, source evaluation or other matters of a contractual nature. Matters concerning violation of statute are to be referred to such Federal, State or local authority as may have proper jurisdiction.

§ 19.42 Codes of conduct.

The recipient shall maintain written standards of conduct governing the performance of its employees engaged in the award and administration of contracts. No employee, officer, or agent shall participate in the selection, award, or administration of a contract supported by Federal funds if a real or apparent conflict of interest would be involved. Such a conflict would arise when the employee, officer, or agent, any member of his or her immediate family, his or her partner, or an organization which employs or is about to

employ any of the parties indicated herein, has a financial or other interest in the firm selected for an award. The officers, employees, and agents of the recipient shall neither solicit nor accept gratuities, favors, or anything of monetary value from contractors, or parties to subagreements. However, recipients may set standards for situations in which the financial interest is not substantial or the gift is an unsolicited item of nominal value. The standards of conduct shall provide for disciplinary actions to be applied for violations of such standards by officers, employees, or agents of the recipient.

§ 19.43 Competition.

All procurement transactions shall be conducted in a manner to provide, to the maximum extent practical, open and free competition. The recipient shall be alert to organizational conflicts of interest as well as noncompetitive practices among contractors that may restrict or eliminate competition or otherwise restrain trade. In order to ensure objective contractor performance and eliminate unfair competitive advantage, contractors that develop or draft specifications, requirements, statements of work, invitations for bids and/or requests for proposals shall be excluded from competing for such procurements. Awards shall be made to the bidder or offeror whose bid or offer is responsive to the solicitation and is most advantageous to the recipient, price, quality and other factors considered. Solicitations shall clearly set forth all requirements that the bidder or offeror shall fulfill in order for the bid or offer to be evaluated by the recipient. Any and all bids or offers may be rejected when it is in the recipient's interest to do so.

§ 19.44 Procurement procedures.

(a) All recipients shall establish written procurement procedures. These procedures shall provide for, at a minimum, that the conditions in paragraphs (a)(1), (2) and (3) of this section apply.

(1) Recipients avoid purchasing unnecessary items.

(2) Where appropriate, an analysis is made of lease and purchase alternatives to determine which would be the most economical and practical procurement for the Federal Government.

(3) Solicitations for goods and services provide for all of the following:

(i) A clear and accurate description of the technical requirements for the material, product or service to be procured. In competitive procurements, such a description shall not contain features which unduly restrict competition.

(ii) Requirements which the bidder/offeror must fulfill and all other factors to be used in evaluating bids or proposals.

(iii) A description, whenever practicable, of technical requirements in terms of functions to be performed or performance required, including the range of acceptable characteristics or minimum acceptable standards.

(iv) The specific features of ''brand name or equal'' descriptions that bidders are required to meet when such items are included in the solicitation.

(v) The acceptance, to the extent practicable and economically feasible, of products and services dimensioned in the metric system of measurement.

(vi) Preference, to the extent practicable and economically feasible, for products and services that conserve natural resources and protect the environment and are energy efficient.

(b) Positive efforts shall be made by recipients to utilize small businesses, minority-owned firms, and women's business enterprises, whenever possible. Recipients of Federal awards shall take all of the following steps to further this goal.

(1) Ensure that small businesses, minority-owned firms, and women's business enterprises are used to the fullest extent practicable.

(2) Make information on forthcoming opportunities available and arrange timeframes for purchases and contracts to encourage and facilitate participation by small businesses, minority-owned firms, and women's business enterprises.

(3) Consider in the contract process whether firms competing for larger contracts intend to subcontract with small businesses, minority-owned firms, and women's business enterprises.

(4) Encourage contracting with consortiums of small businesses, minority-owned firms and women's business enterprises when a contract is too large for one of these firms to handle individually.

(5) Use the services and assistance, as appropriate, of such organizations as the Small Business Administration and the Department of Commerce's Minority Business Development Agency in the solicitation and utilization of small businesses, minority-owned firms, and women's business enterprises.

(c) The type of procuring instruments used (e.g., fixed price contracts, cost reimbursable contracts, purchase orders, and incentive contracts) shall be determined by the recipient but shall be appropriate for the particular procurement and for promoting the best interest of the program or project involved. The ''cost-plus-a-percentage-of-cost'' or ''percentage of construction cost'' methods of contracting shall not be used.

(d) Contracts shall be made only with responsible contractors who possess the potential ability to perform successfully under the terms and conditions of the proposed procurement. Consideration shall be given to such matters as contractor integrity, record of past performance, financial and technical resources or accessibility to other necessary resources. In certain circumstances, contracts with certain parties are restricted by 49 CFR part 29, the implementation of E.O.'s 12549 and 12689, ''Debarment and Suspension.''

(e) Recipients shall, on request, make available for the Federal awarding agency, pre-award review and procurement documents, such as request for proposals or invitations for bids, independent cost estimates, etc., when any of the following conditions apply.

(1) A recipient's procurement procedures or operation fails to comply with the procurement standards in this part.

(2) The procurement is expected to exceed the small purchase threshold fixed at 41 U.S.C. 403 (11) (currently $25,000) and is to be awarded without competition or only one bid or offer is received in response to a solicitation.

(3) The procurement, which is expected to exceed the small purchase threshold, specifies a ''brand name'' product.

(4) The proposed award over the small purchase threshold is to be awarded to other than the apparent low bidder under a sealed bid procurement.

(5) A proposed contract modification changes the scope of a contract or increases the contract amount by more than the amount of the small purchase threshold.

(f) Additional procurement procedures.

(1) Section 165 of the STAA of 1982, as amended; section 337 of the Surface Transportation and Uniform Relocation Assistance Act (STURAA) of 1987, 49 U.S.C. 1601, section 1048 of the Intermodal Surface Transportation Efficiency Act of 1991, and section 9129 of the Aviation Safety and Capacity Expansion Act of 1990, 49 U.S.C. app. 2226, impose Buy America requirements on the procurement of foreign products and materials by all recipients of FHWA, FTA, and Federal Aviation Administration (FAA) funds. Procedures are contained in 49 CFR part 660, Buy America Requirements and part 661, Buy America Requirements—STAA of 1982. In addition, for FTA recipients, nonregulatory guidance is contained in FTA Circular 4220.1B, Third Party Contracting Guidelines, Chapter I, section 11. Non-regulatory guidance for FAA programs is contained in FAA Order 5100.38A and special conditions in grant awards.

(2) Section 511(a)(16) of the Airport and Airway Improvement Act of 1982, 49 U.S.C. app. 2210, requires FAA recipients and subrecipients to extend the use of qualifications-based (e.g., architectural and engineering services) contract selection procedures to certain other related areas and to award such contracts in the same manner as Federal contracts for architectural and engineering services are negotiated under Title IX of the 1949 Federal Property and Administrative Services Act, or equivalent airport sponsor qualifications based requirements. Non-regulatory guidance for FAA programs is contained in FAA Order 5100.38A and special conditions in grant awards.

(3) Section 3(a)(2)(C) of the Federal Transit Act, as amended, (49 U.S.C. app. 1602(a)(2)(C)) prohibits the use of grant or loan funds to support procurements utilizing exclusionary or discriminatory specifications. Nonregulatory guidance is contained in FTA Circular 4220.1B, Third Party Contracting Guidelines, Chapter I, section 15 and Attachment A.

(4) Section 1241(b)(1) of 46 U.S.C. and 46 CFR part 381, Cargo Preference—U.S. Flag Vessels impose cargo preference requirements on the shipment of foreign made goods for FTA recipients. Nonregulatory guidance is contained in FTA Circular 4220.1B, Third Party Contracting Guidelines, Chapter I, section 10.

§ 19.45 Cost and price analysis.

Some form of cost or price analysis shall be made and documented in the procurement files in connection with every procurement action. Price analysis may be accomplished in various ways, including the comparison of price quotations submitted, market prices and similar indicia, together with discounts. Cost analysis is the review and evaluation of each element of cost to determine reasonableness, allocability and allowability.

§ 19.46 Procurement records.

Procurement records and files for purchases in excess of the small purchase threshold shall include the following at a minimum:

(a) Basis for contractor selection,

(b) Justification for lack of competition when competitive bids or offers are not obtained, and

(c) Basis for award cost or price.

§ 19.47 Contract administration.

A system for contract administration shall be maintained to ensure contractor conformance with the terms, conditions and specifications of the contract and to ensure adequate and timely follow up of all purchases. Recipients shall evaluate contractor performance and document, as appropriate, whether contractors have met the terms, conditions, and specifications of the contract.

§ 19.48 Contract provisions.

The recipient shall include, in addition to provisions to define a sound and complete agreement, the following provisions in all contracts. The following provisions shall also be applied to subcontracts.

(a) Contracts in excess of the small purchase threshold shall contain contractual provisions or conditions that allow for administrative, contractual, or legal remedies in instances in which a contractor violates or breaches the contract terms, and provide for such remedial actions as may be appropriate.

(b) All contracts in excess of the small purchase threshold shall contain suitable provisions for termination by the recipient, including the manner by which termination shall be effected and the basis for settlement. In addition, such contracts shall describe conditions under which the contract may be terminated for default as well as conditions where the contract may be terminated because of circumstances beyond the control of the contractor.

(c) Except as otherwise required by statute, an award that requires the contracting (or subcontracting) for construction or facility improvements shall provide for the recipient to follow its own requirements relating to bid guarantees, performance bonds, and payment bonds unless the construction contract or subcontract exceeds $100,000. For those contracts or subcontracts exceeding $100,000, the Federal awarding agency may accept the bonding policy and requirements of the recipient, provided the Federal awarding agency has made a determination that the Federal Government's interest is adequately protected. If such a determination has not been made, the minimum requirements shall be as follows:

(1) A bid guarantee from each bidder equivalent to five percent of the bid price. The ''bid guarantee'' shall consist of a firm commitment such as a bid bond, certified check, or other negotiable instrument accompanying a bid as assurance that the bidder shall, upon acceptance of his bid, execute such contractual documents as may be required within the time specified.

(2) A performance bond on the part of the contractor for 100 percent of the contract price. A ''performance bond'' is one executed in connection with a contract to secure fulfillment of all the contractor's obligations under such contract.

(3) A payment bond on the part of the contractor for 100 percent of the contract price. A ''payment bond'' is one executed in connection with a contract to assure payment as required by statute of all persons supplying labor and material in the execution of the work provided for in the contract.

(4) Where bonds are required in the situations described herein, the bonds shall be obtained from companies holding certificates of authority as acceptable sureties pursuant to 31 CFR part 223, ''Surety Companies Doing Business with the United States.''

(d) All negotiated contracts (except those for less than the small purchase threshold) awarded by recipients shall include a provision to the effect that the recipient, the Federal awarding agency, the Comptroller General of the United States, or any of their duly authorized representatives, shall have access to any books, documents, papers and records of the contractor which are directly pertinent to a specific program for the purpose of making audits, examinations, excerpts and transcriptions.

(e) All contracts, including small purchases, awarded by recipients and their contractors shall contain the procurement provisions of appendix A to this part, as applicable.

REPORTS AND RECORDS

§ 19.50 Purpose of reports and records.

Sections 19.51 through 19.53 set forth the procedures for monitoring and reporting on the recipient's financial and program performance and the necessary standard reporting forms. They also set forth record retention requirements.

§ 19.51 Monitoring and reporting program performance.

(a) Recipients are responsible for managing and monitoring each project, program, subaward, function or activity supported by the award. Recipients shall monitor subawards to ensure subrecipients have met the audit requirements as delineated in § 19.26.

(b) The Federal awarding agency shall prescribe the frequency with which the performance reports shall be submitted. Except as provided in § 19.51(f), performance reports shall not be required more frequently than quarterly or, less frequently than annually. Annual reports shall be due 90 calendar days after the grant year; quarterly or semi-annual reports shall be due 30 days after the reporting period. The Federal awarding agency may require annual reports before the anniversary dates of multiple year awards in lieu of these requirements. The final performance reports are due 90 calendar days after the expiration or termination of the award.

(c) If inappropriate, a final technical or performance report shall not be required after completion of the project.

(d) When required, performance reports shall generally contain, for each award, brief information on each of the following:

(1) A comparison of actual accomplishments with the goals and objectives established for the period, the findings of the investigator, or both. Whenever appropriate and the output of programs or projects can be readily quantified, such quantitative data should be related to cost data for computation of unit costs.

(2) Reasons why established goals were not met, if appropriate.

(3) Other pertinent information including, when appropriate, analysis and explanation of cost overruns or high unit costs.

(e) Recipients shall not be required to submit more than the original and two copies of performance reports.

(f) Recipients shall immediately notify the Federal awarding agency of developments that have a significant impact on the award-supported activities. Also, notification shall be given in the case of problems, delays, or adverse conditions which materially impair the ability to meet the objectives of the award. This notification shall include a statement of the action taken or contemplated, and any assistance needed to resolve the situation.

(g) Federal awarding agencies may make site visits, as needed.

(h) Federal awarding agencies shall comply with clearance requirements of 5 CFR part 1320 when requesting performance data from recipients.

§ 19.52 Financial reporting.

(a) The following forms or such other forms as may be approved by OMB are authorized for obtaining financial information from recipients.

(1) SF–269 or SF–269A, Financial Status Report.

(i) Each Federal awarding agency shall require recipients to use the SF–269 or SF–269A to report the status of funds for all nonconstruction projects or programs. A Federal awarding agency may, however, have the option of not requiring the SF–269 or SF–269A when the SF–270, Request for Advance or Reimbursement, or SF–272, Report of Federal Cash Transactions, is determined to provide adequate information to meet its needs, except that a final SF–269 or SF–269A shall be required at the completion of the project when the SF–270 is used only for advances.

(ii) The Federal awarding agency shall prescribe whether the report shall be on a cash or accrual basis. If the Federal awarding agency requires accrual information and the recipient's accounting records are not normally kept on the accrual basis, the recipient shall not be required to convert its accounting system, but shall develop such accrual information through best estimates based on an analysis of the documentation on hand.

(iii) The Federal awarding agency shall determine the frequency of the Financial Status Report for each project or program, considering the size and complexity of the particular project or program. However, the report shall not be required more frequently than quarterly or less frequently than annually. A final report shall be required at the completion of the agreement.

(iv) The Federal awarding agency shall require recipients to submit the SF–269 or SF–269A (an original and no more than two copies) no later than 30 days after the end of each specified reporting period for quarterly and semiannual reports, and 90 calendar days for annual and final reports. Extensions of reporting due dates may be approved by the Federal awarding agency upon request of the recipient.

(2) SF–272, Report of Federal Cash Transactions.

(i) When funds are advanced to recipients the Federal awarding agency shall require each recipient to submit the SF–272 and, when necessary, its continuation sheet, SF–272a. The Federal awarding agency shall use this report to monitor cash advanced to recipients and to obtain disbursement information for each agreement with the recipients.

(ii) Federal awarding agencies may require forecasts of Federal cash requirements in the ''Remarks'' section of the report.

(iii) When practical and deemed necessary, Federal awarding agencies may require recipients to report in the ''Remarks'' section the amount of cash advances received in excess of three days. Recipients shall provide short narrative explanations of actions taken to reduce the excess balances.

(iv) Recipients shall be required to submit not more than the original and two copies of the SF–272 15 calendar days following the end of each quarter. The Federal awarding agencies may require a monthly report from those recipients receiving advances totaling $1 million or more per year.

(v) Federal awarding agencies may waive the requirement for submission of the SF–272 for any one of the following reasons:

(A) When monthly advances do not exceed $25,000 per recipient, provided that such advances are monitored through other forms contained in this section;

(B) If, in the Federal awarding agency's opinion, the recipient's accounting controls are adequate to minimize excessive Federal advances; or,

(C) When the electronic payment mechanisms provide adequate data.

(b) When the Federal awarding agency needs additional information or more frequent reports, the following shall be observed.

(1) When additional information is needed to comply with legislative requirements, Federal awarding agencies

shall issue instructions to require recipients to submit such information under the ''Remarks'' section of the reports.

(2) When a Federal awarding agency determines that a recipient's accounting system does not meet the standards in § 19.21, additional pertinent information to further monitor awards may be obtained upon written notice to the recipient until such time as the system is brought up to standard. The Federal awarding agency, in obtaining this information, shall comply with report clearance requirements of 5 CFR part 1320.

(3) Federal awarding agencies are encouraged to shade out any line item on any report if not necessary.

(4) Federal awarding agencies may accept the identical information from the recipients in machine readable format or computer printouts or electronic outputs in lieu of prescribed formats.

(5) Federal awarding agencies may provide computer or electronic outputs to recipients when such expedites or contributes to the accuracy of reporting.

§ 19.53 Retention and access requirements for records.

(a) This section sets forth requirements for record retention and access to records for awards to recipients. Federal awarding agencies shall not impose any other record retention or access requirements upon recipients.

(b) Financial records, supporting documents, statistical records, and all other records pertinent to an award shall be retained for a period of three years from the date of submission of the final expenditure report or, for awards that are renewed quarterly or annually, from the date of the submission of the quarterly or annual financial report, as authorized by the Federal awarding agency. The only exceptions are the following.

(1) If any litigation, claim, or audit is started before the expiration of the 3-year period, the records shall be retained until all litigation, claims or audit findings involving the records have been resolved and final action taken.

(2) Records for real property and equipment acquired with Federal funds shall be retained for 3 years after final disposition.

(3) When records are transferred to or maintained by the Federal awarding agency, the 3-year retention requirement is not applicable to the recipient.

(4) Indirect cost rate proposals, cost allocations plans, etc. as specified in paragraph § 19.53(g).

(c) Copies of original records may be substituted for the original records if authorized by the Federal awarding agency.

(d) The Federal awarding agency shall request transfer of certain records to its custody from recipients when it determines that the records possess long term retention value. However, in order to avoid duplicate recordkeeping, a Federal awarding agency may make arrangements for recipients to retain any records that are continuously needed for joint use.

(e) The Federal awarding agency, the Inspector General, Comptroller General of the United States, or any of their duly authorized representatives, have the right of timely and unrestricted access to any books, documents, papers, or other records of recipients that are pertinent to the awards, in order to make audits, examinations, excerpts, transcripts and copies of such documents. This right also includes timely and reasonable access to a recipient's personnel for the purpose of interview and discussion related to such documents. The rights of access in this paragraph are not limited to the required retention period, but shall last as long as records are retained.

(f) Unless required by statute, no Federal awarding agency shall place restrictions on recipients that limit public access to the records of recipients that are pertinent to an award, except when the Federal awarding agency can demonstrate that such records shall be kept confidential and would have been exempted from disclosure pursuant to the Freedom of Information Act (5 U.S.C. 552) if the records had belonged to the Federal awarding agency.

(g) Indirect cost rate proposals, cost allocations plans, etc. Paragraphs (g)(1)

and (g)(2) of this section apply to the following types of documents, and their supporting records: Indirect cost rate computations or proposals, cost allocation plans, and any similar accounting computations of the rate at which a particular group of costs is chargeable (such as computer usage chargeback rates or composite fringe benefit rates).

(1) *If submitted for negotiation.* If the recipient submits to the Federal awarding agency or the subrecipient submits to the recipient the proposal, plan, or other computation to form the basis for negotiation of the rate, then the 3-year retention period for its supporting records starts on the date of such submission.

(2) *If not submitted for negotiation.* If the recipient is not required to submit to the Federal awarding agency or the subrecipient is not required to submit to the recipient the proposal, plan, or other computation for negotiation purposes, then the 3-year retention period for the proposal, plan, or other computation and its supporting records starts at the end of the fiscal year (or other accounting period) covered by the proposal, plan, or other computation.

TERMINATION AND ENFORCEMENT

§ 19.60 Purpose of termination and enforcement.

Sections 19.61 and 19.62 set forth uniform suspension, termination and enforcement procedures.

§ 19.61 Termination.

(a) Awards may be terminated in whole or in part only if the conditions in paragraph (a) (1), (2) or (3) of this section apply.

(1) By the Federal awarding agency, if a recipient materially fails to comply with the terms and conditions of an award.

(2) By the Federal awarding agency with the consent of the recipient, in which case the two parties shall agree upon the termination conditions, including the effective date and, in the case of partial termination, the portion to be terminated.

(3) By the recipient upon sending to the Federal awarding agency written notification setting forth the reasons for such termination, the effective date, and, in the case of partial termination, the portion to be terminated. However, if the Federal awarding agency determines in the case of partial termination that the reduced or modified portion of the grant will not accomplish the purposes for which the grant was made, it may terminate the grant in its entirety under either paragraph (a) (1) or (2) of this section.

(b) If costs are allowed under an award, the responsibilities of the recipient referred to in § 19.71(a), including those for property management as applicable, shall be considered in the termination of the award, and provision shall be made for continuing responsibilities of the recipient after termination, as appropriate.

§ 19.62 Enforcement.

(a) Remedies for noncompliance. If a recipient materially fails to comply with the terms and conditions of an award, whether stated in a Federal statute, regulation, assurance, application, or notice of award, the Federal awarding agency may, in addition to imposing any of the special conditions outlined in § 19.14, take one or more of the following actions, as appropriate in the circumstances.

(1) Temporarily withhold cash payments pending correction of the deficiency by the recipient or more severe enforcement action by the Federal awarding agency.

(2) Disallow (that is, deny both use of funds and any applicable matching credit for) all or part of the cost of the activity or action not in compliance.

(3) Wholly or partly suspend or terminate the current award.

(4) Withhold further awards for the project or program.

(5) Take other remedies that may be legally available.

(b) Hearings and appeals. In taking an enforcement action, the awarding agency shall provide the recipient an opportunity for hearing, appeal, or other administrative proceeding to which the recipient is entitled under any statute or regulation applicable to the action involved.

(c) Effects of suspension and termination. Costs of a recipient resulting

from obligations incurred by the recipient during a suspension or after termination of an award are not allowable unless the awarding agency expressly authorizes them in the notice of suspension or termination or subsequently. Other recipient costs during suspension or after termination which are necessary and not reasonably avoidable are allowable if the conditions in paragraph (c) (1) or (2) of this section apply.

(1) The costs result from obligations which were properly incurred by the recipient before the effective date of suspension or termination, are not in anticipation of it, and in the case of a termination, are noncancellable.

(2) The costs would be allowable if the award were not suspended or expired normally at the end of the funding period in which the termination takes effect.

(d) Relationship to debarment and suspension. The enforcement remedies identified in this section, including suspension and termination, do not preclude a recipient from being subject to debarment and suspension under E.O.s 12549 and 12689 and 49 CFR part 29 (see § 19.13).

Subpart D—After-the-Award Requirements

§ 19.70 Purpose.

Sections 19.71 through 19.73 contain closeout procedures and other procedures for subsequent disallowances and adjustments.

§ 19.71 Closeout procedures.

(a) Recipients shall submit, within 90 calendar days after the date of completion of the award, all financial, performance, and other reports as required by the terms and conditions of the award. The Federal awarding agency may approve extensions when requested by the recipient.

(b) Unless the Federal awarding agency authorizes an extension, a recipient shall liquidate all obligations incurred under the award not later than 90 calendar days after the funding period or the date of completion as specified in the terms and conditions of the award or in agency implementing instructions.

(c) The Federal awarding agency shall make prompt payments to a recipient for allowable reimbursable costs under the award being closed out.

(d) The recipient shall promptly refund any balances of unobligated cash that the Federal awarding agency has advanced or paid and that is not authorized to be retained by the recipient for use in other projects. OMB Circular A–129 governs unreturned amounts that become delinquent debts.

(e) When authorized by the terms and conditions of the award, the Federal awarding agency shall make a settlement for any upward or downward adjustments to the Federal share of costs after closeout reports are received.

(f) The recipient shall account for any real and personal property acquired with Federal funds or received from the Federal Government in accordance with §§ 19.31 through 19.37.

(g) In the event a final audit has not been performed prior to the closeout of an award, the Federal awarding agency shall retain the right to recover an appropriate amount after fully considering the recommendations on disallowed costs resulting from the final audit.

§ 19.72 Subsequent adjustments and continuing responsibilities.

(a) The closeout of an award does not affect any of the following.

(1) The right of the Federal awarding agency to disallow costs and recover funds on the basis of a later audit or other review.

(2) The obligation of the recipient to return any funds due as a result of later refunds, corrections, or other transactions.

(3) Audit requirements in § 19.26.

(4) Property management requirements in §§ 19.31 through 19.37.

(5) Records retention as required in § 19.53.

(b) After closeout of an award, a relationship created under an award may be modified or ended in whole or in part with the consent of the Federal awarding agency and the recipient, provided the responsibilities of the recipient referred to in § 19.73(a), including those for property management as

applicable, are considered and provisions made for continuing responsibilities of the recipient, as appropriate.

§ 19.73 Collection of amounts due.

(a) Any funds paid to a recipient in excess of the amount to which the recipient is finally determined to be entitled under the terms and conditions of the award constitute a debt to the Federal Government. If not paid within a reasonable period after the demand for payment, the Federal awarding agency may reduce the debt by the provisions of paragraph (a) (1), (2) or (3) of this section.

(1) Making an administrative offset against other requests for reimbursements.

(2) Withholding advance payments otherwise due to the recipient.

(3) Taking other action permitted by statute.

(b) Except as otherwise provided by law, the Federal awarding agency shall charge interest on an overdue debt in accordance with 4 CFR chapter II, ''Federal Claims Collection Standards.''

APPENDIX A TO PART 19—CONTRACT PROVISIONS

All contracts, awarded by a recipient including small purchases, shall contain the following provisions as applicable:

1. *Equal Employment Opportunity*—All contracts shall contain a provision requiring compliance with E.O. 11246, ''Equal Employment Opportunity,'' as amended by E.O. 11375, ''Amending Executive Order 11246 Relating to Equal Employment Opportunity,'' and as supplemented by regulations at 41 CFR part 60, ''Office of Federal Contract Compliance Programs, Equal Employment Opportunity, Department of Labor.''

2. *Copeland ''Anti-Kickback'' Act (18 U.S.C. 874 and 40 U.S.C. 276c)*—All contracts and subgrants in excess of $2,000 for construction or repair awarded by recipients and subrecipients shall include a provision for compliance with the Copeland ''Anti-Kickback'' Act (18 U.S.C. 874), as supplemented by Department of Labor regulations (29 CFR part 3, ''Contractors and Subcontractors on Public Building or Public Work Financed in Whole or in part by Loans or Grants from the United States''). The Act provides that each contractor or subrecipient shall be prohibited from inducing, by any means, any person employed in the construction, completion, or repair of public work, to give up any part of the compensation to which he is otherwise entitled. The recipient shall report all suspected or reported violations to the Federal awarding agency.

3. *Davis-Bacon Act, as amended (40 U.S.C. 276a to a–7)*—When required by Federal program legislation, all construction contracts awarded by the recipients and subrecipients of more than $2000 shall include a provision for compliance with the Davis-Bacon Act (40 U.S.C. 276a to a(7) and as supplemented by Department of Labor regulations (29 CFR part 5, ''Labor Standards Provisions Applicable to Contracts Governing Federally Financed and Assisted Construction''). Under this Act, contractors shall be required to pay wages to laborers and mechanics at a rate not less than the minimum wages specified in a wage determination made by the Secretary of Labor. In addition, contractors shall be required to pay wages not less than once a week. The recipient shall place a copy of the current prevailing wage determination issued by the Department of Labor in each solicitation and the award of a contract shall be conditioned upon the acceptance of the wage determination. The recipient shall report all suspected or reported violations to the Federal awarding agency.

4. *Contract Work Hours and Safety Standards Act (40 U.S.C. 327–333)*—Where applicable, all contracts awarded by recipients in excess of $2,000 for construction contracts and in excess of $2,500 for other contracts that involve the employment of mechanics or laborers shall include a provision for compliance with sections 102 and 107 of the Contract Work Hours and Safety Standards Act (40 U.S.C. 327–333), as supplemented by Department of Labor regulations (29 CFR part 5). Under section 102 of the Act, each contractor shall be required to compute the wages of every mechanic and laborer on the basis of a standard work week of 40 hours. Work in excess of the standard work week is permissible provided that the worker is compensated at a rate of not less than 1½ times the basic rate of pay for all hours worked in excess of 40 hours in the work week. Section 107 of the Act is applicable to construction work and provides that no laborer or mechanic shall be required to work in surroundings or under working conditions which are unsanitary, hazardous or dangerous. These requirements do not apply to the purchases of supplies or materials or articles ordinarily available on the open market, or contracts for transportation or transmission of intelligence.

5. *Rights to Inventions Made Under a Contract or Agreement*—Contracts or agreements for the performance of experimental, developmental, or research work shall provide for the rights of the Federal Government and the recipient in any resulting invention in accordance with 37 CFR part 401, ''Rights to Inventions Made by Nonprofit Organizations and Small Business Firms Under Government Grants, Contracts and Cooperative

Agreements,'' and any implementing regulations issued by the awarding agency.

6. *Clean Air Act (42 U.S.C. 7401 et seq.) and the Federal Water Pollution Control Act (33 U.S.C. 1251 et seq.), as amended*—Contracts and subgrants of amounts in excess of $100,000 shall contain a provision that requires the recipient to agree to comply with all applicable standards, orders or regulations issued pursuant to the Clean Air Act (42 U.S.C. 7401 et seq.) and the Federal Water Pollution Control Act as amended (33 U.S.C. 1251 et seq.). Violations shall be reported to the Federal awarding agency and the Regional Office of the Environmental Protection Agency (EPA).

7. *Byrd Anti-Lobbying Amendment (31 U.S.C. 1352)*—Contractors who apply or bid for an award of $100,000 or more shall file the certification required by 49 CFR part 20, ''New Restrictions on Lobbying.'' Each tier certifies to the tier above that it will not and has not used Federal appropriated funds to pay any person or organization for influencing or attempting to influence an officer or employee of any agency, a member of Congress, officer or employee of Congress, or an employee of a member of Congress in connection with obtaining any Federal contract, grant or any other award covered by 31 U.S.C. 1352. Each tier shall also disclose any lobbying with non-Federal funds that takes place in connection with obtaining any Federal award. Such disclosures are forwarded from tier to tier up to the recipient.

8. *Debarment and Suspension (E.O.s 12549 and 12689)*—No contract shall be made to parties listed on the General Services Administration's List of Parties Excluded from Federal Procurement or Nonprocurement Programs in accordance with E.O.s 12549 and 12689, ''Debarment and Suspension'' and 49 CFR part 29. This list contains the names of parties debarred, suspended, or otherwise excluded by agencies, and contractors declared ineligible under statutory or regulatory authority other than E.O. 12549. Contractors with awards that exceed the small purchase threshold shall provide the required certification regarding its exclusion status and that of its principal employees.

PART 20—NEW RESTRICTIONS ON LOBBYING

Subpart A—General

Sec.
20.100 Conditions on use of funds.
20.105 Definitions.
20.110 Certification and disclosure.

Subpart B–Activities by Own Employees

20.200 Agency and legislative liaison.
20.205 Professional and technical services.
20.210 Reporting.

Subpart C—Activities by Other than Own Employees

20.300 Professional and technical services.

Subpart D—Penalties and Enforcement

20.400 Penalties.
20.405 Penalty procedures.
20.410 Enforcement.

Subpart E—Exemptions

20.500 Secretary of Defense.

Subpart F—Agency Reports

20.600 Semi-annual compilation.
20.605 Inspector General report.
APPENDIX A TO PART 20—CERTIFICATION REGARDING LOBBYING
APPENDIX B TO PART 20—DISCLOSURE FORM TO REPORT LOBBYING

AUTHORITY: Sec. 319, Public Law 101–121 (31 U.S.C. 1352); 49 U.S.C. 322(a).

SOURCE: 55 FR 6737 and 6756, Feb. 26, 1990, unless otherwise noted.

CROSS REFERENCE: See also Office of Management and Budget notice published at 54 FR 52306, December 20, 1989.

Subpart A—General

§ 20.100 Conditions on use of funds.

(a) No appropriated funds may be expended by the recipient of a Federal contract, grant, loan, or cooperative ageement to pay any person for influencing or attempting to influence an officer or employee of any agency, a Member of Congress, an officer or employee of Congress, or an employee of a Member of Congress in connection with any of the following covered Federal actions: the awarding of any Federal contract, the making of any Federal grant, the making of any Federal loan, the entering into of any cooperative agreement, and the extension, continuation, renewal, amendment, or modification of any Federal contract, grant, loan, or cooperative agreement.

(b) Each person who requests or receives from an agency a Federal contract, grant, loan, or cooperative agreement shall file with that agency a certification, set forth in appendix A, that the person has not made, and will not make, any payment prohibited by paragraph (a) of this section.

(c) Each person who requests or receives from an agency a Federal contract, grant, loan, or a cooperative agreement shall file with that agency a disclosure form, set forth in appendix B, if such person has made or has agreed to make any payment using nonappropriated funds (to include profits from any covered Federal action), which would be prohibited under paragraph (a) of this section if paid for with appropriated funds.

(d) Each person who requests or receives from an agency a commitment providing for the United States to insure or guarantee a loan shall file with that agency a statement, set forth in appendix A, whether that person has made or has agreed to make any payment to influence or attempt to influence an officer or employee of any agency, a Member of Congress, an officer or employee of Congress, or an employee of a Member of Congress in connection with that loan insurance or guarantee.

(e) Each person who requests or receives from an agency a commitment providing for the United States to insure or guarantee a loan shall file with that agency a disclosure form, set forth in appendix B, if that person has made or has agreed to make any payment to influence or attempt to influence an officer or employee of any agency, a Member of Congress, an officer or employee of Congress, or an employee of a Member of Congress in connection with that loan insurance or guarantee.

§ 20.105 Definitions.

For purposes of this part:

(a) *Agency,* as defined in 5 U.S.C. 552(f), includes Federal executive departments and agencies as well as independent regulatory commissions and Government corporations, as defined in 31 U.S.C. 9101(1).

(b) *Covered Federal action* means any of the following Federal actions:

(1) The awarding of any Federal contract;

(2) The making of any Federal grant;

(3) The making of any Federal loan;

(4) The entering into of any cooperative agreement; and,

(5) The extension, continuation, renewal, amendment, or modification of any Federal contract, grant, loan, or cooperative agreement.

Covered Federal action does not include receiving from an agency a commitment providing for the United States to insure or guarantee a loan. Loan guarantees and loan insurance are addressed independently within this part.

(c) *Federal contract* means an acquisition contract awarded by an agency, including those subject to the Federal Acquisition Regulation (FAR), and any other acquisition contract for real or personal property or services not subject to the FAR.

(d) *Federal cooperative agreement* means a cooperative agreement entered into by an agency.

(e) *Federal grant* means an award of financial assistance in the form of money, or property in lieu of money, by the Federal Government or a direct appropriation made by law to any person. The term does not include technical assistance which provides services instead of money, or other assistance in the form of revenue sharing, loans, loan guarantees, loan insurance, interest subsidies, insurance, or direct United States cash assistance to an individual.

(f) *Federal loan* means a loan made by an agency. The term does not include loan guarantee or loan insurance.

(g) *Indian tribe* and *tribal organization* have the meaning provided in section 4 of the Indian Self-Determination and Education Assistance Act (25 U.S.C. 450B). Alaskan Natives are included under the definitions of Indian tribes in that Act.

(h) *Influencing or attempting to influence* means making, with the intent to influence, any communication to or appearance before an officer or employee or any agency, a Member of Congress, an officer or employee of Congress, or an employee of a Member of Congress in connection with any covered Federal action.

(i) *Loan guarantee* and *loan insurance* means an agency's guarantee or insurance of a loan made by a person.

(j) *Local government* means a unit of government in a State and, if chartered, established, or otherwise recognized by a State for the performance of a governmental duty, including a local

public authority, a special district, an intrastate district, a council of governments, a sponsor group representative organization, and any other instrumentality of a local government.

(k) *Officer or employee of an agency* includes the following individuals who are employed by an agency:

(1) An individual who is appointed to a position in the Government under title 5, U.S. Code, including a position under a temporary appointment;

(2) A member of the uniformed services as defined in section 101(3), title 37, U.S. Code;

(3) A special Government employee as defined in section 202, title 18, U.S. Code; and,

(4) An individual who is a member of a Federal advisory committee, as defined by the Federal Advisory Committee Act, title 5, U.S. Code appendix 2.

(l) *Person* means an individual, corporation, company, association, authority, firm, partnership, society, State, and local government, regardless of whether such entity is operated for profit or not for profit. This term excludes an Indian tribe, tribal organization, or any other Indian organization with respect to expenditures specifically permitted by other Federal law.

(m) *Reasonable compensation* means, with respect to a regularly employed officer or employee of any person, compensation that is consistent with the normal compensation for such officer or employee for work that is not furnished to, not funded by, or not furnished in cooperation with the Federal Government.

(n) *Reasonable payment* means, with respect to perfessional and other technical services, a payment in an amount that is consistent with the amount normally paid for such services in the private sector.

(o) *Recipient* includes all contractors, subcontractors at any tier, and subgrantees at any tier of the recipient of funds received in connection with a Federal contract, grant, loan, or cooperative agreement. The term excludes an Indian tribe, tribal organization, or any other Indian organization with respect to expenditures specifically permitted by other Federal law.

(p) *Regularly employed* means, with respect to an officer or employee of a person requesting or receiving a Federal contract, grant, loan, or cooperative agreement or a commitment providing for the United States to insure or guarantee a loan, an officer or employee who is employed by such person for at least 130 working days within one year immediately preceding the date of the submission that initiates agency consideration of such person for receipt of such contract, grant, loan, cooperative agreement, loan insurance commitment, or loan guarantee commitment. An officer or employee who is employed by such person for less than 130 working days within one year immediately preceding the date of the submission that initiates agency consideration of such person shall be considered to be regularly employed as soon as he or she is employed by such person for 130 working days.

(q) *State* means a State of the United States, the District of Columbia, the Commonwealth of Puerto Rico, a territory or possession of the United States, an agency or instrumentality of a State, and a multi-State, regional, or interstate entity having governmental duties and powers.

§ 20.110 Certification and disclosure.

(a) Each person shall file a certification, and a disclosure form, if required, with each submission that initiates agency consideration of such person for:

(1) Award of a Federal contract, grant, or cooperative agreement exceeding $100,000; or

(2) An award of a Federal loan or a commitment providing for the United States to insure or guarantee a loan exceeding $150,000.

(b) Each person shall file a certification, and a disclosure form, if required, upon receipt by such person of:

(1) A Federal contract, grant, or cooperative agreement exceeding $100,000; or

(2) A Federal loan or a commitment providing for the United States to insure or guarantee a loan exceeding $150,000,

Unless such person previously filed a certification, and a disclosure form, if

required, under paragraph (a) of this section.

(c) Each person shall file a disclosure form at the end of each calendar quarter in which there occurs any event that requires disclosure or that materially affects the accuracy of the information contained in any disclosure form previously filed by such person under paragraphs (a) or (b) of this section. An event that materially affects the accuracy of the information reported includes:

(1) A cumulative increase of $25,000 or more in the amount paid or expected to be paid for influencing or attempting to influence a covered Federal action; or

(2) A change in the person(s) or individual(s) influencing or attempting to influence a covered Federal action; or,

(3) A change in the officer(s), employee(s), or Member(s) contacted to influence or attempt to influence a covered Federal action.

(d) Any person who requests or receives from a person referred to in paragraphs (a) or (b) of this section:

(1) A subcontract exceeding $100,000 at any tier under a Federal contract;

(2) A subgrant, contract, or subcontract exceeding $100,000 at any tier under a Federal grant;

(3) A contract or subcontract exceeding $100,000 at any tier under a Federal loan exceeding $150,000; or,

(4) A contract or subcontract exceeding $100,000 at any tier under a Federal cooperative agreement,

Shall file a certification, and a disclosure form, if required, to the next tier above.

(e) All disclosure forms, but not certifications, shall be forwarded from tier to tier until received by the person referred to in paragraphs (a) or (b) of this section. That person shall forward all disclosure forms to the agency.

(f) Any certification or disclosure form filed under paragraph (e) of this section shall be treated as a material representation of fact upon which all receiving tiers shall rely. All liability arising from an erroneous representation shall be borne solely by the tier filing that representation and shall not be shared by any tier to which the erroneous representation is forwarded. Submitting an erroneous certification or disclosure constitutes a failure to file the required certification or disclosure, respectively. If a person fails to file a required certification or disclosure, the United States may pursue all available remedies, including those authorized by section 1352, title 31, U.S. Code.

(g) For awards and commitments in process prior to December 23, 1989, but not made before that date, certifications shall be required at award or commitment, covering activities occurring between December 23, 1989, and the date of award or commitment. However, for awards and commitments in process prior to the December 23, 1989 effective date of these provisions, but not made before December 23, 1989, disclosure forms shall not be required at time of award or commitment but shall be filed within 30 days.

(h) No reporting is required for an activity paid for with appropriated funds if that activity is allowable under either subpart B or C.

Subpart B—Activities by Own Employees

§ 20.200 Agency and legislative liaison.

(a) The prohibition on the use of appropriated funds, in § 20.100 (a), does not apply in the case of a payment of reasonable compensation made to an officer or employee of a person requesting or receiving a Federal contract, grant, loan, or cooperative agreement if the payment is for agency and legislative liaison activities not directly related to a covered Federal action.

(b) For purposes of paragraph (a) of this section, providing any information specifically requested by an agency or Congress is allowable at any time.

(c) For purposes of paragraph (a) of this section, the following agency and legislative liaison activities are allowable at any time only where they are not related to a specific solicitation for any covered Federal action:

(1) Discussing with an agency (including individual demonstrations) the qualities and characteristics of the person's products or services, conditions or terms of sale, and service capabilities; and,

(2) Technical discussions and other activities regarding the application or

adaptation of the person's products or services for an agency's use.

(d) For purposes of paragraph (a) of this section, the following agencies and legislative liaison activities are allowable only where they are prior to formal solicitation of any covered Federal action:

(1) Providing any information not specifically requested but necessary for an agency to make an informed decision about initiation of a covered Federal action;

(2) Technical discussions regarding the preparation of an unsolicited proposal prior to its official submission; and,

(3) Capability presentations by persons seeking awards from an agency pursuant to the provisions of the Small Business Act, as amended by Public Law 95–507 and other subsequent amendments.

(e) Only those activities expressly authorized by this section are allowable under this section.

§ 20.205 Professional and technical services.

(a) The prohibition on the use of appropriated funds, in § 20.100 (a), does not apply in the case of a payment of reasonable compensation made to an officer or employee of a person requesting or receiving a Federal contract, grant, loan, or cooperative agreement or an extension, continuation, renewal, amendment, or modification of a Federal contract, grant, loan, or cooperative agreement if payment is for professional or technical services rendered directly in the preparation, submission, or negotiation of any bid, proposal, or application for that Federal contract, grant, loan, or cooperative agreement or for meeting requirements imposed by or pursuant to law as a condition for receiving that Federal contract, grant, loan, or cooperative agreement.

(b) For purposes of paragraph (a) of this section, ''professional and technical services'' shall be limited to advice and analysis directly applying any professional or technical discipline. For example, drafting of a legal document accompanying a bid or proposal by a lawyer is allowable. Similarly, technical advice provided by an engineer on the performance or operational capability of a piece of equipment rendered directly in the negotiation of a contract is allowable. However, communications with the intent to influence made by a professional (such as a licensed lawyer) or a technical person (such as a licensed accountant) are not allowable under this section unless they provide advice and analysis directly applying their professional or technical expertise and unless the advice or analysis is rendered directly and solely in the preparation, submission or negotiation of a covered Federal action. Thus, for example, communications with the intent to influence made by a lawyer that do not provide legal advice or analysis directly and solely related to the legal aspects of his or her client's proposal, but generally advocate one proposal over another are not allowable under this section because the lawyer is not providing professional legal services. Similarly, communications with the intent to influence made by an engineer providing an engineering analysis prior to the preparation or submission of a bid or proposal are not allowable under this section since the engineer is providing technical services but not directly in the preparation, submission or negotiation of a covered Federal action.

(c) Requirements imposed by or pursuant to law as a condition for receiving a covered Federal award include those required by law or regulation, or reasonably expected to be required by law or regulation, and any other requirements in the actual award documents.

(d) Only those services expressly authorized by this section are allowable under this section.

§ 20.210 Reporting.

No reporting is required with respect to payments of reasonable compensation made to regularly employed officers or employees of a person.

Subpart C—Activities by Other Than Own Employees

§ 20.300 Professional and technical services.

(a) The prohibition on the use of appropriated funds, in § 20.100 (a), does not apply in the case of any reasonable payment to a person, other than an officer or employee of a person requesting or receiving a covered Federal action, if the payment is for professional or technical services rendered directly in the preparation, submission, or negotiation of any bid, proposal, or application for that Federal contract, grant, loan, or cooperative agreement or for meeting requirements imposed by or pursuant to law as a condition for receiving that Federal contract, grant, loan, or cooperative agreement.

(b) The reporting requirements in § 20.110 (a) and (b) regarding filing a disclosure form by each person, if required, shall not apply with respect to professional or technical services rendered directly in the preparation, submission, or negotiation of any commitment providing for the United States to insure or guarantee a loan.

(c) For purposes of paragraph (a) of this section, ''professional and technical services'' shall be limited to advice and analysis directly applying any professional or technical discipline. For example, drafting or a legal document accompanying a bid or proposal by a lawyer is allowable. Similarly, technical advice provided by an engineer on the performance or operational capability of a piece of equipment rendered directly in the negotiation of a contract is allowable. However, communications with the intent to influence made by a professional (such as a licensed lawyer) or a technical person (such as a licensed accountant) are not allowable under this section unless they provide advice and analysis directly applying their professional or technical expertise and unless the advice or analysis is rendered directly and solely in the preparation, submission or negotiation of a covered Federal action. Thus, for example, communications with the intent to influence made by a lawyer that do not provide legal advice or analysis directly and solely related to the legal aspects of his or her client's proposal, but generally advocate one proposal over another are not allowable under this section because the lawyer is not providing professional legal services. Similarly, communications with the intent to influence made by an engineer providing an engineering analysis prior to the preparation or submission of a bid or proposal are not allowable under this section since the engineer is providing technical services but not directly in the preparation, submission or negotiation of a covered Federal action.

(d) Requirements imposed by or pursuant to law as a condition for receiving a covered Federal award include those required by law or regulation, or reasonably expected to be required by law or regulation, and any other requirements in the actual award documents.

(e) Persons other than officers or employees of a person requesting or receiving a covered Federal action include consultants and trade associations.

(f) Only those services expressly authorized by this section are allowable under this section.

Subpart D—Penalties and Enforcement

§ 20.400 Penalties.

(a) Any person who makes an expenditure prohibited herein shall be subject to a civil penalty of not less than $10,000 and not more than $100,000 for each such expenditure.

(b) Any person who fails to file or amend the disclosure form (see appendix B) to be filed or amended if required herein, shall be subject to a civil penalty of not less than $10,000 and not more than $100,000 for each such failure.

(c) A filing or amended filing on or after the date on which an administrative action for the imposition of a civil penalty is commenced does not prevent the imposition of such civil penalty for a failure occurring before that date. An administrative action is commenced with respect to a failure when an investigating official determines in writing to commence an investigation of an allegation of such failure.

(d) In determining whether to impose a civil penalty, and the amount of any such penalty, by reason of a violation by any person, the agency shall consider the nature, circumstances, extent, and gravity of the violation, the effect on the ability of such person to continue in business, any prior violations by such person, the degree of culpability of such person, the ability of the person to pay the penalty, and such other matters as may be appropriate.

(e) First offenders under paragraphs (a) or (b) of this section shall be subject to a civil penalty of $10,000, absent aggravating circumstances. Second and subsequent offenses by persons shall be subject to an appropriate civil penalty between $10,000 and $100,000, as determined by the agency head or his or her designee.

(f) An imposition of a civil penalty under this section does not prevent the United States from seeking any other remedy that may apply to the same conduct that is the basis for the imposition of such civil penalty.

§ 20.405 Penalty procedures.

Agencies shall impose and collect civil penalties pursuant to the provisions of the Program Fraud and Civil Remedies Act, 31 U.S.C. sections 3803 (except subsection (c)), 3804, 3805, 3806, 3807, 3808, and 3812, insofar as these provisions are not inconsistent with the requirements herein.

§ 20.410 Enforcement.

The head of each agency shall take such actions as are necessary to ensure that the provisions herein are vigorously implemented and enforced in that agency.

Subpart E—Exemptions

§ 20.500 Secretary of Defense.

(a) The Secretary of Defense may exempt, on a case-by-case basis, a covered Federal action from the prohibition whenever the Secretary determines, in writing, that such an exemption is in the national interest. The Secretary shall transmit a copy of each such written exemption to Congress immediately after making such a determination.

(b) The Department of Defense may issue supplemental regulations to implement paragraph (a) of this section.

Subpart F—Agency Reports

§ 20.600 Semi-annual compilation.

(a) The head of each agency shall collect and compile the disclosure reports (see appendix B) and, on May 31 and November 30 of each year, submit to the Secretary of the Senate and the Clerk of the House of Representatives a report containing a compilation of the information contained in the disclosure reports received during the six-month period ending on March 31 or September 30, respectively, of that year.

(b) The report, including the compilation, shall be available for public inspection 30 days after receipt of the report by the Secretary and the Clerk.

(c) Information that involves intelligence matters shall be reported only to the Select Committee on Intelligence of the Senate, the Permanent Select Committee on Intelligence of the House of Representatives, and the Committees on Appropriations of the Senate and the House of Representatives in accordance with procedures agreed to by such committees. Such information shall not be available for public inspection.

(d) Information that is classified under Executive Order 12356 or any successor order shall be reported only to the Committee on Foreign Relations of the Senate and the Committee on Foreign Affairs of the House of Representatives or the Committees on Armed Services of the Senate and the House of Representatives (whichever such committees have jurisdiction of matters involving such information) and to the Committees on Appropriations of the Senate and the House of Representatives in accordance with procedures agreed to by such committees. Such information shall not be available for public inspection.

(e) The first semi-annual compilation shall be submitted on May 31, 1990, and shall contain a compilation of the disclosure reports received from December 23, 1989 to March 31, 1990.

(f) Major agencies, designated by the Office of Management and Budget

(OMB), are required to provide machine-readable compilations to the Secretary of the Senate and the Clerk of the House of Representatives no later than with the compilations due on May 31, 1991. OMB shall provide detailed specifications in a memorandum to these agencies.

(g) Non-major agencies are requested to provide machine-readable compilations to the Secretary of the Senate and the Clerk of the House of Representatives.

(h) Agencies shall keep the originals of all disclosure reports in the official files of the agency.

§ 20.605 Inspector General report.

(a) The Inspector General, or other official as specified in paragraph (b) of this section, of each agency shall prepare and submit to Congress each year, commencing with submission of the President's Budget in 1991, an evaluation of the compliance of that agency with, and the effectiveness of, the requirements herein. The evaluation may include any recommended changes that may be necessary to strengthen or improve the requirements.

(b) In the case of an agency that does not have an Inspector General, the agency official comparable to an Inspector General shall prepare and submit the annual report, or, if there is no such comparable official, the head of the agency shall prepare and submit the annual report.

(c) The annual report shall be submitted at the same time the agency submits its annual budget justifications to Congress.

(d) The annual report shall include the following: All alleged violations relating to the agency's covered Federal actions during the year covered by the report, the actions taken by the head of the agency in the year covered by the report with respect to those alleged violations and alleged violations in previous years, and the amounts of civil penalties imposed by the agency in the year covered by the report.

APPENDIX A TO PART 20—CERTIFICATION REGARDING LOBBYING

Certification for Contracts, Grants, Loans, and Cooperative Agreements

The undersigned certifies, to the best of his or her knowledge and belief, that:

(1) No Federal appropriated funds have been paid or will be paid, by or on behalf of the undersigned, to any person for influencing or attempting to influence an officer or employee of an agency, a Member of Congress, an officer or employee of Congress, or an employee of a Member of Congress in connection with the awarding of any Federal contract, the making of any Federal grant, the making of any Federal loan, the entering into of any cooperative agreement, and the extension, continuation, renewal, amendment, or modification of any Federal contract, grant, loan, or cooperative agreement.

(2) If any funds other than Federal appropriated funds have been paid or will be paid to any person for influencing or attempting to influence an officer or employee of any agency, a Member of Congress, an officer or employee of Congress, or an employee of a Member of Congress in connection with this Federal contract, grant, loan, or cooperative agreement, the undersigned shall complete and submit Standard Form–LLL, ''Disclosure Form to Report Lobbying,'' in accordance with its instructions.

(3) The undersigned shall require that the language of this certification be included in the award documents for all subawards at all tiers (including subcontracts, subgrants, and contracts under grants, loans, and cooperative agreements) and that all subrecipients shall certify and disclose accordingly.

This certification is a material representation of fact upon which reliance was placed when this transaction was made or entered into. Submission of this certification is a prerequisite for making or entering into this transaction imposed by section 1352, title 31, U.S. Code. Any person who fails to file the required certification shall be subject to a civil penalty of not less than $10,000 and not more than $100,000 for each such failure.

Statement for Loan Guarantees and Loan Insurance

The undersigned states, to the best of his or her knowledge and belief, that:

If any funds have been paid or will be paid to any person for influencing or attempting to influence an officer or employee of any agency, a Member of Congress, an officer or employee of Congress, or an employee of a Member of Congress in connection with this commitment providing for the United States

to insure or guarantee a loan, the undersigned shall complete and submit Standard Form–LLL, ''Disclosure Form to Report Lobbying,'' in accordance with its instructions.

Submission of this statement is a prerequisite for making or entering into this transaction imposed by section 1352, title 31, U.S. Code. Any person who fails to file the required statement shall be subject to a civil penalty of not less than $10,000 and not more than $100,000 for each such failure.

APPENDIX B TO PART 20—DISCLOSURE FORM TO REPORT LOBBYING

DISCLOSURE OF LOBBYING ACTIVITIES

Approved by OMB 0348-0046

Complete this form to disclose lobbying activities pursuant to 31 U.S.C. 1352
(See reverse for public burden disclosure.)

1. Type of Federal Action:
☐ a. contract
b. grant
c. cooperative agreement
d. loan
e. loan guarantee
f. loan insurance

2. Status of Federal Action:
☐ a. bid/offer/application
b. initial award
c. post-award

3. Report Type:
☐ a. initial filing
b. material change
For Material Change Only:
year _____ quarter _____
date of last report _____

4. Name and Address of Reporting Entity:
☐ Prime ☐ Subawardee
Tier _____, *if known:*

Congressional District, *if known:*

5. If Reporting Entity in No. 4 is Subawardee, Enter Name and Address of Prime:

Congressional District, *if known:*

6. Federal Department/Agency:

7. Federal Program Name/Description:

CFDA Number, *if applicable:* _____

8. Federal Action Number, *if known:*

9. Award Amount, *if known:*
$

10. a. Name and Address of Lobbying Entity
(if individual, last name, first name, MI):

b. Individuals Performing Services *(including address if different from No. 10a)*
(last name, first name, MI):

(attach Continuation Sheet(s) SF-LLL-A, if necessary)

11. Amount of Payment *(check all that apply):*
$ _____ ☐ actual ☐ planned

12. Form of Payment *(check all that apply):*
☐ a. cash
☐ b. in-kind; specify: nature _____
value _____

13. Type of Payment *(check all that apply):*
☐ a. retainer
☐ b. one-time fee
☐ c. commission
☐ d. contingent fee
☐ e. deferred
☐ f. other; specify: _____

14. Brief Description of Services Performed or to be Performed and Date(s) of Service, including officer(s), employee(s), or Member(s) contacted, for Payment Indicated in Item 11:

(attach Continuation Sheet(s) SF-LLL-A, if necessary)

15. Continuation Sheet(s) SF-LLL-A attached: ☐ Yes ☐ No

16. Information requested through this form is authorized by title 31 U.S.C. section 1352. This disclosure of lobbying activities is a material representation of fact upon which reliance was placed by the tier above when this transaction was made or entered into. This disclosure is required pursuant to 31 U.S.C. 1352. This information will be reported to the Congress semi-annually and will be available for public inspection. Any person who fails to file the required disclosure shall be subject to a civil penalty of not less than $10,000 and not more than $100,000 for each such failure.

Signature: _____
Print Name: _____
Title: _____
Telephone No.: _____ **Date:** _____

Federal Use Only:

Authorized for Local Reproduction Standard Form - LLL

This disclosure form shall be completed by the reporting entity, whether subawardee or prime Federal recipient, at the initiation or receipt of a covered Federal action, or a material change to a previous filing, pursuant to title 31 U.S.C. section 1352. The filing of a form is required for each payment or agreement to make payment to any lobbying entity for influencing or attempting to influence an officer or employee of any agency, a Member of Congress, an officer or employee of Congress, or an employee of a Member of Congress in connection with a covered Federal action. Use the SF-LLL-A Continuation Sheet for additional information if the space on the form is inadequate. Complete all items that apply for both the initial filing and material change report. Refer to the implementing guidance published by the Office of Management and Budget for additional information.

1. Identify the type of covered Federal action for which lobbying activity is and/or has been secured to influence the outcome of a covered Federal action.
2. Identify the status of the covered Federal action.
3. Identify the appropriate classification of this report. If this is a followup report caused by a material change to the information previously reported, enter the year and quarter in which the change occurred. Enter the date of the last previously submitted report by this reporting entity for this covered Federal action.
4. Enter the full name, address, city, state and zip code of the reporting entity. Include Congressional District, if known. Check the appropriate classification of the reporting entity that designates if it is, or expects to be, a prime or subaward recipient. Identify the tier of the subawardee, e.g., the first subawardee of the prime is the 1st tier. Subawards include but are not limited to subcontracts, subgrants and contract awards under grants.
5. If the organization filing the report in item 4 checks "Subawardee", then enter the full name, address, city, state and zip code of the prime Federal recipient. Include Congressional District, if known.
6. Enter the name of the Federal agency making the award or loan commitment. Include at least one organizational level below agency name, if known. For example, Department of Transportation, United States Coast Guard.
7. Enter the Federal program name or description for the covered Federal action (item 1). If known, enter the full Catalog of Federal Domestic Assistance (CFDA) number for grants, cooperative agreements, loans, and loan commitments.
8. Enter the most appropriate Federal identifying number available for the Federal action identified in item 1 (e.g., Request for Proposal (RFP) number; Invitation for Bid (IFB) number; grant announcement number; the contract, grant, or loan award number; the application/proposal control number assigned by the Federal agency). Include prefixes, e.g., "RFP-DE-90-001."
9. For a covered Federal action where there has been an award or loan commitment by the Federal agency, enter the Federal amount of the award/loan commitment for the prime entity identified in item 4 or 5.
10. (a) Enter the full name, address, city, state and zip code of the lobbying entity engaged by the reporting entity identified in item 4 to influence the covered Federal action.

    (b) Enter the full names of the individual(s) performing services, and include full address if different from 10 (a). Enter Last Name, First Name, and Middle Initial (MI).
11. Enter the amount of compensation paid or reasonably expected to be paid by the reporting entity (item 4) to the lobbying entity (item 10). Indicate whether the payment has been made (actual) or will be made (planned). Check all boxes that apply. If this is a material change report, enter the cumulative amount of payment made or planned to be made.
12. Check the appropriate box(es). Check all boxes that apply. If payment is made through an in-kind contribution, specify the nature and value of the in-kind payment.
13. Check the appropriate box(es). Check all boxes that apply. If other, specify nature.
14. Provide a specific and detailed description of the services that the lobbyist has performed, or will be expected to perform, and the date(s) of any services rendered. Include all preparatory and related activity, not just time spent in actual contact with Federal officials. Identify the Federal official(s) or employee(s) contacted or the officer(s), employee(s), or Member(s) of Congress that were contacted.
15. Check whether or not a SF-LLL-A Continuation Sheet(s) is attached.
16. The certifying official shall sign and date the form, print his/her name, title, and telephone number.

Public reporting burden for this collection of information is estimated to average 30 mintues per response, including time for reviewing instructions, searching existing data sources, gathering and maintaining the data needed, and completing and reviewing the collection of information. Send comments regarding the burden estimate or any other aspect of this collection of information, including suggestions for reducing this burden, to the Office of Management and Budget, Paperwork Reduction Project (0348-0046), Washington, D.C. 20503.

DISCLOSURE OF LOBBYING ACTIVITIES
CONTINUATION SHEET

Approved by OMB
0348-0046

Reporting Entity: _____ **Page** _____ **of** _____

Authorized for Local Reproduction
Standard Form - LLL-A

PART 21—NONDISCRIMINATION IN FEDERALLY-ASSISTED PROGRAMS OF THE DEPARTMENT OF TRANSPORTATION—EFFECTUATION OF TITLE VI OF THE CIVIL RIGHTS ACT OF 1964

Sec.
21.1 Purpose.
21.3 Application of this part.
21.5 Discrimination prohibited.
21.7 Assurances required.
21.9 Compliance information.
21.11 Conduct of investigations.
21.13 Procedure for effecting compliance.
21.15 Hearings.
21.17 Decisions and notices.
21.19 Judicial review.
21.21 Effect on other regulations, forms, and instructions.
21.23 Definitions.

APPENDIX A TO PART 21—ACTIVITIES TO WHICH THIS PART APPLIES
APPENDIX B TO PART 21—ACTIVITIES TO WHICH THIS PART APPLIES WHEN A PRIMARY OBJECTIVE OF THE FEDERAL FINANCIAL ASSISTANCE IS TO PROVIDE EMPLOYMENT
APPENDIX C TO PART 21—APPLICATION OF PART 21 TO CERTAIN FEDERAL FINANCIAL ASSISTANCE OF THE DEPARTMENT OF TRANSPORTATION

AUTHORITY: Sec. 602, 42 U.S.C. 2000d–1.

SOURCE: 35 FR 10080, June 18, 1970, unless otherwise noted.

§ 21.1 Purpose.

The purpose of this part is to effectuate the provisions of title VI of the Civil Rights Act of 1964 (hereafter referred to as the Act) to the end that no person in the United States shall, on the grounds of race, color, or national origin, be excluded from participation in, be denied the benefits of, or be otherwise subjected to discrimination under any program or activity receiving Federal financial assistance from the Department of Transportation.

§ 21.3 Application of this part.

(a) This part applies to any program for which Federal financial assistance is authorized under a law administered by the Department, including the federally assisted programs and activities listed in appendix A to this part. It also applies to money paid, property transferred, or other Federal financial assistance extended under any such program after the effective date of this part pursuant to an application approved before that effective date. This part does not apply to:

(1) Any Federal financial assistance by way of insurance or guaranty contracts;

(2) Money paid, property transferred, or other assistance extended under any such program before the effective date of this part, except where such assistance was subject to the title VI regulations of any agency whose responsibilities are now exercised by this Department;

(3) Any assistance to any individual who is the ultimate beneficiary under any such program; or

(4) Any employment practice, under any such program, of any employer, employment agency, or labor organization, except to the extent described in § 21.5(c).

The fact that a program or activity is not listed in appendix A to this part shall not mean, if title VI of the Act is otherwise applicable, that such program is not covered. Other programs under statutes now in force or hereinafter enacted may be added to appendix A to this part.

(b) In any program receiving Federal financial assistance in the form, or for the acquisition, of real property or an interest in real property, to the extent that rights to space on, over, or under any such property are included as part of the program receiving that assistance, the nondiscrimination requirement of this part shall extend to any facility located wholly or in part in that space.

§ 21.5 Discrimination prohibited.

(a) *General.* No person in the United States shall, on the grounds of race, color, or national origin be excluded from participation in, be denied the benefits of, or be otherwise subjected to discrimination under, any program to which this part applies.

(b) Specific discriminatory actions prohibited:

(1) A recipient under any program to which this part applies may not, directly or through contractual or other arrangements, on the grounds of race, color, or national origin.

(i) Deny a person any service, financial aid, or other benefit provided under the program;

(ii) Provide any service, financial aid, or other benefit to a person which is different, or is provided in a different manner, from that provided to others under the program;

(iii) Subject a person to segregation or separate treatment in any matter related to his receipt of any service, financial aid, or other benefit under the program;

(iv) Restrict a person in any way in the enjoyment of any advantage or privilege enjoyed by others receiving any service, financial aid, or other benefit under the program;

(v) Treat a person differently from others in determining whether he satisfies any admission, enrollment, quota, eligibility, membership, or other requirement or condition which persons must meet in order to be provided any service, financial aid, or other benefit provided under the program;

(vi) Deny a person an opportunity to participate in the program through the provision of services or otherwise or afford him an opportunity to do so which is different from that afforded others under the program; or

(vii) Deny a person the opportunity to participate as a member of a planning, advisory, or similar body which is an integral part of the program.

(2) A recipient, in determining the types of services, financial aid, or other benefits, or facilities which will be provided under any such program, or the class of person to whom, or the situations in which, such services, financial aid, other benefits, or facilities will be provided under any such program, or the class of persons to be afforded an opportunity to participate in any such program; may not, directly or through contractual or other arrangements, utilize criteria or methods of administration which have the effect of subjecting persons to discrimination because of their race, color, or national origin, or have the effect of defeating or substantially impairing accomplishment of the objectives of the program with respect to individuals of a particular race, color, or national origin.

(3) In determining the site or location of facilities, a recipient or applicant may not make selections with the purpose or effect of excluding persons from, denying them the benefits of, or subjecting them to discrimination under any program to which this regulation applies, on the grounds of race, color, or national origin; or with the purpose or effect of defeating or substantially impairing the accomplishment of the objectives of the Act or this part.

(4) As used in this section the services, financial aid, or other benefits provided under a program receiving Federal financial assistance include any service, financial aid, or other benefit provided in or through a facility provided with the aid of Federal financial assistance.

(5) The enumeration of specific forms of prohibited discrimination in this paragraph does not limit the generality of the prohibition in paragraph (a) of this section.

(6) Examples demonstrating the application of the provisions of this section to certain programs of the Department of Transportation are contained in appendix C of this part.

(7) This part does not prohibit the consideration of race, color, or national origin if the purpose and effect are to remove or overcome the consequences of practices or impediments which have restricted the availability of, or participation in, the program or activity receiving Federal financial assistance, on the grounds of race, color, or national origin. Where prior discriminatory practice or usage tends, on the grounds of race, color, or national origin to exclude individuals from participation in, to deny them the benefits of, or to subject them to discrimination under any program or activity to which this part applies, the applicant or recipient must take affirmative action to remove or overcome the effects of the prior discriminatory practice or usage. Even in the absence of prior discriminatory practice or usage, a recipient in administering a program or activity to which this part applies, is expected to take affirmative action to assure that no person is excluded from participation in or denied the benefits of the program or activity on the grounds of race, color, or national origin.

(c) Employment practices:

(1) Where a primary objective of a program of Federal financial assistance to which this part applies is to provide employment, a recipient or other party subject to this part shall not, directly or through contractual or other arrangements, subject a person to discrimination on the ground of race, color, or national origin in its employment practices under such program (including recruitment or recruitment advertising, hiring, firing, upgrading, promotion, demotion, transfer, layoff, termination, rates of pay or other forms of compensation or benefits, selection for training or apprenticeship, use of facilities, and treatment of employees). Such recipient shall take affirmative action to insure that applicants are employed, and employees are treated during employment, without regard to their race, color, or national origin. The requirements applicable to construction employment under any such program shall be those specified in or pursuant to Part III of Executive Order 11246 or any Executive order which supersedes it.

(2) Federal financial assistance to programs under laws funded or administered by the Department which have as a primary objective the providing of employment include those set forth in appendix B to this part.

(3) Where a primary objective of the Federal financial assistance is not to provide employment, but discrimination on the grounds of race, color, or national origin in the employment practices of the recipient or other persons subject to the regulation tends, on the grounds of race, color, or national origin, to exclude individuals from participation in, to deny them the benefits of, or to subject them to discrimination under any program to which this regulation applies, the provisions of paragraph (c)(1) of this section shall apply to the employment practices of the recipient or other persons subject to the regulation, to the extent necessary to assure equality of opportunity to, and nondiscriminatory treatment of, beneficiaries.

(d) A recipient may not make a selection of a site or location of a facility if the purpose of that selection, or its effect when made, is to exclude individuals from participation in, to deny them the benefits of, or to subject them to discrimination under any program or activity to which this rule applies, on the grounds of race, color, or national origin; or if the purpose is to, or its effect when made will, substantially impair the accomplishment of the objectives of this part.

[35 FR 10080, June 18, 1970, as amended by Amdt. 72–2, 38 FR 17997, July 5, 1973]

§ 21.7 Assurances required.

(a) *General.* (1) Every application for Federal financial assistance to carry out a program to which this part applies, except a program to which paragraph (b) of this section applies, and every application for Federal financial assistance to provide a facility shall, as a condition to its approval and the extension of any Federal financial assistance pursuant to the application, contain or be accompanied by, an assurance that the program will be conducted or the facility operated in compliance with all requirements imposed by or pursuant to this part. Every program of Federal financial assistance shall require the submission of such an assurance. In the case where the Federal financial assistance is to provide or is in the form of personal property, or real property or interest therein or structures thereon, the assurance shall obligate the recipient, or, in the case of a subsequent transfer, the transferee, for the period during which the property is used for a purpose for which the Federal financial assistance is extended or for another purpose involving the provision of similar services or benefits, or for as long as the recipient retains ownership or possession of the property, whichever is longer. In all other cases the assurance shall obligate the recipient for the period during which Federal financial assistance is extended to the program. In the case where the assistance is sought for the construction of a facility or part of a facility, the assurance shall in any event extend to the entire facility and to facilities operated in connection therewith. The Secretary shall specify the form of the foregoing assurances for each program, and the extent to which like assurances will be required

of subgrantees, contractors and subcontractors, transferees, successors in interest, and other participants in the program. Any such assurance shall include provisions which give the United States a right to seek its judicial enforcement.

(2) In the case where Federal financial assistance is provided in the form of a transfer of real property, structures, or improvements thereon, or interest therein, from the Federal Government, the instrument effecting or recording the transfer shall contain a covenant running with the land assuring nondiscrimination for the period during which the real property is used for a purpose for which the Federal financial assistance is extended or for another purpose involving the provision of similar services or benefits. Where no transfer of property or interest therein from the Federal Government is involved, but property is acquired or improved under a program of Federal financial assistance, the recipient shall agree to include such covenant in any subsequent transfer of such property. When the property is obtained from the Federal Government, such covenant may also include a condition coupled with a right to be reserved by the Department to revert title to the property in the event of a breach of the covenant where, in the discretion of the Secretary, such a condition and right of reverter is appropriate to the program under which the real property is obtained and to the nature of the grant and the grantee. In such event if a transferee of real property proposes to mortgage or otherwise encumber the real property as security for financing construction of new, or improvement of existing, facilities on such property for the purposes for which the property was transferred, the Secretary may agree, upon request of the transferee and if necessary to accomplish such financing, and upon such conditions as he deems appropriate, to subordinate such right of reversion to the lien of such mortgage or other encumbrance.

(b) *Continuing State programs.* Every application by a State or a State agency to carry out a program involving continuing Federal financial assistance to which this part applies (including the programs listed in appendix A to this part) shall as a condition to its approval and the extension of any Federal financial assistance pursuant to the application: (1) Contain or be accompanied by a statement that the program is (or, in the case of a new program, will be) conducted in compliance with all requirements imposed by or pursuant to this part, and (2) provide or be accompanied by provision for such methods of administration for the program as are found by the Secretary to give reasonable guarantee that the applicant and all recipients of Federal financial assistance under such program will comply with all requirements imposed by or pursuant to this part.

§21.9 Compliance information.

(a) *Cooperation and assistance.* The Secretary shall to the fullest extent practicable seek the cooperation of recipients in obtaining compliance with this part and shall provide assistance and guidance to recipients to help them comply voluntarily with this part.

(b) *Compliance reports.* Each recipient shall keep such records and submit to the Secretary timely, complete, and accurate compliance reports at such times, and in such form and containing such information, as the Secretary may determine to be necessary to enable him to ascertain whether the recipient has complied or is complying with this part. In the case of any program under which a primary recipient extends Federal financial assistance to any other recipient, such other recipient shall also submit such compliance reports to the primary recipient as may be necessary to enable the primary recipient to carry out its obligations under this part. In general recipients should have available for the Secretary racial and ethnic data showing the extent to which members of minority groups are beneficiaries of programs receiving Federal financial assistance.

(c) *Access to sources of information.* Each recipient shall permit access by the Secretary during normal business

hours to such of its books, records, accounts, and other sources of information, and its facilities as may be pertinent to ascertain compliance with this part. Where any information required of a recipient is in the exclusive possession of any other agency, institution, or person and this agency, institution, or person fails or refuses to furnish this information, the recipient shall so certify in its report and shall set forth what efforts it has made to obtain the information.

(d) *Information to beneficiaries and participants.* Each recipient shall make available to participants, beneficiaries, and other interested persons such information regarding the provisions of this part and its applicability to the program under which the recipient receives Federal financial assistance, and make such information available to them in such manner, as the Secretary finds necessary to apprise such persons of the protections against discrimination assured them by the Act and this part.

[35 FR 10080, June 18, 1970, as amended by Amdt. 72–2, 38 FR 17997, July 5, 1973]

§ 21.11 Conduct of investigations.

(a) *Periodic compliance reviews.* The Secretary shall from time to time review the practices of recipients to determine whether they are complying with this part.

(b) *Complaints.* Any person who believes himself or any specific class of persons to be subjected to discrimination prohibited by this part may by himself or by a representative file with the Secretary a written complaint. A complaint must be filed not later than 180 days after the date of the alleged discrimination, unless the time for filing is extended by the Secretary.

(c) *Investigations.* The Secretary will make a prompt investigation whenever a compliance review, report, complaint, or any other information indicates a possible failure to comply with this part. The investigation will include, where appropriate, a review of the pertinent practices and policies of the recipient, the circumstances under which the possible noncompliance with this part occurred, and other factors relevant to a determination as to whether the recipient has failed to comply with this part.

(d) *Resolution of matters.* (1) If an investigation pursuant to paragraph (c) of this section indicates a failure to comply with this part, the Secretary will so inform the recipient and the matter will be resolved by informal means whenever possible. If it has been determined that the matter cannot be resolved by informal means, action will be taken as provided for in § 21.13.

(2) If an investigation does not warrant action pursuant to paragraph (d)(1) of this section the Secretary will so inform the recipient and the complainant, if any, in writing.

(e) *Intimidatory or retaliatory acts prohibited.* No recipient or other person shall intimidate, threaten, coerce, or discriminate against any individual for the purpose of interfering with any right or privilege secured by section 601 of the Act or this part, or because he has made a complaint, testified, assisted, or participated in any manner in an investigation, proceeding, or hearing under this part. The identity of complainants shall be kept confidential except to the extent necessary to carry out the purposes of this part, including the conduct of any investigation, hearing, or judicial proceeding arising thereunder.

[35 FR 10080, June 18, 1970, as amended by Amdt. 72–2, 38 FR 17997, July 5, 1973]

§ 21.13 Procedure for effecting compliance.

(a) *General.* If there appears to be a failure or threatened failure to comply with this part, and if the noncompliance or threatened noncompliance cannot be corrected by informal means, compliance with this part may be effected by the suspension or termination of or refusal to grant or to continue Federal financial assistance or by any other means authorized by law. Such other means may include, but are not limited to: (1) A reference to the Department of Justice with a recommendation that appropriate proceedings be brought to enforce any rights of the United States under any law of the United States (including other titles of the Act), or any assurance or other contractual undertaking,

and (2) any applicable proceeding under State or local law.

(b) *Noncompliance with §21.7.* If an applicant fails or refuses to furnish an assurance required under §21.7 or otherwise fails or refuses to comply with a requirement imposed by or pursuant to that section, Federal financial assistance may be refused in accordance with the procedures of paragraph (c) of this section. The Department shall not be required to provide assistance in such a case during the pendency of the administrative proceedings under such paragraph. However, subject to §21.21, the Department shall continue assistance during the pendency of such proceedings where such assistance is due and payable pursuant to an application approved prior to the effective date of this part.

(c) *Termination of or refusal to grant or to continue Federal financial assistance.* No order suspending, terminating, or refusing to grant or continue Federal financial assistance shall become effective until:

(1) The Secretary has advised the applicant or recipient of his failure to comply and has determined that compliance cannot be secured by voluntary means;

(2) There has been an express finding on the record, after opportunity for hearing, of a failure by the applicant or recipient to comply with a requirement imposed by or pursuant to this part;

(3) The action has been approved by the Secretary pursuant to §21.17(e); and

(4) The expiration of 30 days after the Secretary has filed with the committee of the House and the committee of the Senate having legislative jurisdiction over the program involved, a full written report of the circumstances and the grounds for such action.

Any action to suspend or terminate or to refuse to grant or to continue Federal financial assistance shall be limited to the particular political entity, or part thereof, or other applicant or recipient as to whom such a finding has been made and shall be limited in its effect to the particular program, or part thereof, in which such noncompliance has been so found.

(d) *Other means authorized by law.* No action to effect compliance with title VI of the Act by any other means authorized by law shall be taken by this Department until:

(1) The Secretary has determined that compliance cannot be secured by voluntary means;

(2) The recipient or other person has been notified of its failure to comply and of the action to be taken to effect compliance; and

(3) The expiration of at least 10 days from the mailing of such notice to the recipient or other person. During this period of at least 10 days, additional efforts shall be made to persuade the recipient or other person to comply with the regulation and to take such corrective action as may be appropriate.

§21.15 Hearings.

(a) *Opportunity for hearing.* Whenever an opportunity for a hearing is required by §21.13(c), reasonable notice shall be given by registered or certified mail, return receipt requested, to the affected applicant or recipient. This notice shall advise the applicant or recipient of the action proposed to be taken, the specific provision under which the proposed action against it is to be taken, and the matters of fact or law asserted as the basis for this action, and either: (1) Fix a date not less than 20 days after the date of such notice within which the applicant or recipient may request of the Secretary that the matter be scheduled for hearing or (2) advise the applicant or recipient that the matter in question has been set down for hearing at a stated place and time. The time and place so fixed shall be reasonable and shall be subject to change for cause. The complainant, if any, shall be advised of the time and place of the hearing. An applicant or recipient may waive a hearing and submit written information and argument for the record. The failure of an applicant or recipient to request a hearing under this paragraph or to appear at a hearing for which a date has been set shall be deemed to be a waiver of the right to a hearing under section 602 of the Act and §21.13(c) and consent to the making of a decision on the basis of such information as is available.

(b) *Time and place of hearing.* Hearings shall be held at the offices of the Department in Washington, D.C., at a

time fixed by the Secretary unless he determines that the convenience of the applicant or recipient or of the Department requires that another place be selected. Hearings shall be held before the Secretary, or at his discretion, before a hearing examiner appointed in accordance with section 3105 of title 5, United States Code, or detailed under section 3344 of title 5, United States Code.

(c) *Right to counsel.* In all proceedings under this section, the applicant or recipient and the Department shall have the right to be represented by counsel.

(d) *Procedures, evidence, and record.* (1) The hearing, decision, and any administrative review thereof shall be conducted in conformity with sections 554 through 557 of title 5, United States Code, and in accordance with such rules of procedure as are proper (and not inconsistent with this section) relating to the conduct of the hearing, giving of notices subsequent to those provided for in paragraph (a) of this section, taking of testimony, exhibits, arguments and briefs, requests for findings, and other related matters. Both the Department and the applicant or recipient shall be entitled to introduce all relevant evidence on the issues as stated in the notice for hearing or as determined by the officer conducting the hearing at the outset of or during the hearing.

(2) Technical rules of evidence do not apply to hearings conducted pursuant to this part, but rules or principles designed to assure production of the most credible evidence available and to subject testimony to test by cross-examination shall be applied where reasonably necessary by the officer conducting the hearing. The hearing officer may exclude irrelevant, immaterial, or unduly repetitious evidence. All documents and other evidence offered or taken for the record shall be open to examination by the parties and opportunity shall be given to refute facts and arguments advanced on either side of the issues. A transcript shall be made of the oral evidence except to the extent the substance thereof is stipulated for the record. All decisions shall be based upon the hearing record and written findings shall be made.

(e) *Consolidated or joint hearings.* In cases in which the same or related facts are asserted to constitute noncompliance with this part with respect to two or more programs to which this part applies, or noncompliance with this part and the regulations of one or more other Federal departments or agencies issued under title VI of the Act, the Secretary may, by agreement with such other departments or agencies, where applicable, provide for the conduct of consolidated or joint hearings, and for the application to such hearings of rules or procedures not inconsistent with this part. Final decisions in such cases, insofar as this regulation is concerned, shall be made in accordance with § 21.17.

§ 21.17 Decisions and notices.

(a) *Procedure on decisions by hearing examiner.* If the hearing is held by a hearing examiner, the hearing examiner shall either make an initial decision, if so authorized, or certify the entire record including his recommended findings and proposed decision to the Secretary for a final decision, and a copy of such initial decision or certification shall be mailed to the applicant or recipient. Where the initial decision is made by the hearing examiner the applicant or recipient may, within 30 days after the mailing of such notice of initial decision, file with the Secretary his exceptions to the initial decision, with his reasons therefor. In the absence of exceptions, the Secretary may, on his own motion, within 45 days after the initial decision, serve on the applicant or recipient a notice that he will review the decision. Upon the filing of such exceptions or of notice of review, the Secretary shall review the initial decision and issue his own decision thereon including the reasons therefor. In the absence of either exceptions or a notice of review the initial decision shall, subject to paragraph (e) of this section, constitute the final decision of the Secretary.

(b) *Decisions on record or review by the Secretary.* Whenever a record is certified to the Secretary for decision or he reviews the decision of a hearing examiner pursuant to paragraph (a) of this section, or whenever the Secretary conducts the hearing, the applicant or

recipient shall be given reasonable opportunity to file with him briefs or other written statements of its contentions, and a written copy of the final decision of the Secretary shall be sent to the applicant or recipient and to the complainant, if any.

(c) *Decisions on record where a hearing is waived.* Whenever a hearing is waived pursuant to §21.15, a decision shall be made by the Secretary on the record and a written copy of such decision shall be sent to the applicant or recipient, and to the complainant, if any.

(d) *Rulings required.* Each decision of a hearing examiner or the Secretary shall set forth his ruling on each finding, conclusion, or exception presented, and shall identify the requirement or requirements imposed by or pursuant to this part with which it is found that the applicant or recipient has failed to comply.

(e) *Approval by Secretary.* Any final decision by an official of the Department, other than the Secretary personally, which provides for the suspension or termination of, or the refusal to grant or continue Federal financial assistance, or the imposition of any other sanction available under this part or the Act, shall promptly be transmitted to the Secretary personally, who may approve such decision, may vacate it, or remit or mitigate any sanction imposed.

(f) *Content of orders.* The final decision may provide for suspension or termination of, or refusal to grant or continue Federal financial assistance, in whole or in part, under the program involved, and may contain such terms, conditions, and other provisions as are consistent with and will effectuate the purposes of the Act and this part, including provisions designed to assure that no Federal financial assistance will thereafter be extended under such programs to the applicant or recipient determined by such decision to be in default in its performance of an assurance given by it pursuant to this part, or to have otherwise failed to comply with this part, unless and until it corrects its noncompliance and satisfies the Secretary that it will fully comply with this part.

(g) *Post termination proceedings.* (1) An applicant or recipient adversely affected by an order issued under paragraph (f) of this section shall be restored to full eligibility to receive Federal financial assistance if it satisfies the terms and conditions of that order for such eligibility or if it brings itself into compliance with this part and provides reasonable assurance that it will fully comply with this part.

(2) Any applicant or recipient adversely affected by an order entered pursuant to paragraph (f) of this section may at any time request the Secretary to restore fully its eligibility to receive Federal financial assistance. Any such request shall be supported by information showing that the applicant or recipient has met the requirements of paragraph (g)(1) of this section. If the Secretary determines that those requirements have been satisfied, he shall restore such eligibility.

(3) If the Secretary denies any such request, the applicant or recipient may submit a request for a hearing in writing, specifying who it believes such official to have been in error. It shall thereupon be given an expeditious hearing, with a decision on the record in accordance with rules or procedures issued by the Secretary. The applicant or recipient will be restored to such eligibility if it proves at such a hearing that it satisfied the requirements of paragraph (g)(1) of this section.

While proceedings under this paragraph are pending, the sanctions imposed by the order issued under paragraph (f) of this section shall remain in effect.

§21.19 Judicial review.

Action taken pursuant to section 602 of the Act is subject to judicial review as provided in section 603 of the Act.

§21.21 Effect on other regulations, forms, and instructions.

(a) *Effect on other regulations.* All regulations, orders, or like directions issued before the effective date of this part by any officer of the Department which impose requirements designed to prohibit any discrimination against individuals on the grounds of race, color, or national origin under any program to which this part applies, and which authorize the suspension or termination of or refusal to grant or to continue Federal financial assistance to

any applicant for a recipient of such assistance under such program for failure to comply with such requirements, are hereby superseded to the extent that such discrimination is prohibited by this part, except that nothing in this part may be considered to relieve any person of any obligation assumed or imposed under any such superseded regulation, order, instruction, or like direction before the effective date of this part. Nothing in this part, however, supersedes any of the following (including future amendments thereof): (1) Executive Order 11246 (3 CFR, 1965 Supp., p. 167) and regulations issued thereunder or (2) any other orders, regulations, or instructions, insofar as such orders, regulations, or instructions prohibit discrimination on the ground of race, color, or national origin in any program or situation to which this part is inapplicable, or prohibit discrimination on any other ground.

(b) *Forms and instructions.* The Secretary shall issue and promptly make available to all interested persons forms and detailed instructions and procedures for effectuating this part as applied to programs to which this part applies and for which he is responsible.

(c) *Supervision and coordination.* The Secretary may from time to time assign to officials of the Department, or to officials of other departments or agencies of the Government with the consent of such departments or agencies, responsibilities in connection with the effectuation of the purposes of title VI of the Act and this part (other than responsibility for final decision as provided in § 21.17), including the achievement of effective coordination and maximum uniformity within the Department and within the Executive Branch of the Government in the application of title VI and this part to similar programs and in similar situations. Any action taken, determination made or requirement imposed by an official of another department or agency acting pursuant to an assignment of responsibility under this paragraph shall have the same effect as though such action had been taken by the Secretary of this Department.

§ 21.23 Definitions.

Unless the context requires otherwise, as used in this part:

(a) *Applicant* means a person who submits an application, request, or plan required to be approved by the Secretary, or by a primary recipient, as a condition to eligibility for Federal financial assistance, and ''application'' means such an application, request, or plan.

(b) *Facility* includes all or any part of structures, equipment, or other real or personal property or interests therein, and the provision of facilities includes the construction, expansion, renovation, remodeling, alteration or acquisition of facilities.

(c) *Federal financial assistance* includes:

(1) Grants and loans of Federal funds;

(2) The grant or donation of Federal property and interests in property;

(3) The detail of Federal personnel;

(4) The sale and lease of, and the permission to use (on other than a casual or transient basis), Federal property or any interest in such property without consideration or at a nominal consideration, or at a consideration which is reduced for the purpose of assisting the recipient, or in recognition of the public interest to be served by such sale or lease to the recipient; and

(5) Any Federal agreement, arrangement, or other contract which has as one of its purposes the provision of assistance.

(d) *Primary recipient* means any recipient that is authorized or required to extend Federal financial assistance to another recipient for the purpose of carrying out a program.

(e) *Program* includes any program, project, or activity for the provision of services, financial aid, or other benefits to individuals (including education or training, health, welfare, rehabilitation, housing, or other services, whether provided through employees of the recipient of Federal financial assistance or provided by others through contracts or other arrangements with the recipient, and including work opportunities), or for the provision of facilities for furnishing services, financial aid or other benefits to individuals. The services, financial aid, or

other benefits provided under a program receiving Federal financial assistance shall be deemed to include any services, financial aid, or other benefits provided with the aid of Federal financial assistance or with the aid of any non-Federal funds, property, or other resources required to be expended or made available for the program to meet matching requirements or other conditions which must be met in order to receive the Federal financial assistance, and to include any services, financial aid or other benefits provided in or through a facility provided with the aid of Federal financial assistance or such non-Federal resources.

(f) *Recipient* may mean any State, territory, possession, the District of Columbia, or Puerto Rico, or any political subdivision thereof, or instrumentality thereof, any public or private agency, institution, or organization, or other entity, or any individual, in any State, territory, possession, the District of Columbia, or Puerto Rico, to whom Federal financial assistance is extended, directly or through another recipient, for any program, including any successor, assignee, or transferee thereof, but such term does not include any ultimate beneficiary under any such program.

(g) *Secretary* means the Secretary of Transportation or, except in §21.17 (e), any person to whom he has delegated his authority in the matter concerned.

APPENDIX A TO PART 21—ACTIVITIES TO WHICH THIS PART APPLIES

1. Use of grants made in connection with Federal-aid highway systems (23 U.S.C. 101 *et seq.*).

2. Use of grants made in connection with the Highway Safety Act of 1966 (23 U.S.C. 401 *et seq.*).

3. Use of grants in connection with the National Traffic and Motor Vehicle Safety Act of 1966 (15 U.S.C. 1391–1409, 1421–1425).

4. Lease of real property and the grant of permits, licenses, easements and rights-of-way covering real property under control of the Coast Guard (14 U.S.C. 93 (n) and *(o)*).

5. Utilization of Coast Guard personnel and facilities by any State, territory, possession, or political subdivision thereof (14 U.S.C. 141(a)).

6. Use of Coast Guard personnel for duty in connection with maritime instruction and training by the States, territories, and Puerto Rico (14 U.S.C. 148).

7. Use of obsolete and other Coast Guard material by sea scout service of Boy Scouts of America, any incorporated unit of the Coast Guard auxiliary, and public body or private organization not organized for profit (14 U.S.C. 641(a)).

8. U.S. Coast Guard Auxiliary Program (14 U.S.C. 821–832).

9. Use of grants for the support of basic scientific research by nonprofit institutions of higher education and nonprofit organizations whose primary purpose is conduct of scientific research (42 U.S.C. 1891).

10. Use of grants made in connection with the Federal-aid Airport Program (secs. 1–15 and 17–20 of the Federal Airport Act, 49 U.S.C. 1101–1114, 1116–1120).

11. Use of U.S. land acquired for public airports under:

a. Section 16 of the Federal Airport Act, 49 U.S.C. 1115; and

b. Surplus Property Act (sec. 13(g) of the Surplus Property Act of 1944, 50 U.S.C. App. 1622(g), and sec. 3 of the Act of Oct. 1, 1949, 50 U.S.C. App. 1622b).

12. Activities carried out in connection with the Aviation Education Program of the Federal Aviation Administration under sections 305, 311, and 313(a) of the Federal Aviation Act of 1958, as amended (49 U.S.C. 1346, 1352, and 1354(a)).

13. Use of grants and loans made in connection with Urban Mass Transportation Capital Facilities Grant and Loan Program—Urban Mass Transportation Act of 1964, as amended (49 U.S.C. 1602).

14. Use of grants made in connection with Urban Mass Transportation Research and Demonstration Grant Program—Urban Mass Transportation Act of 1964, as amended (49 U.S.C. 1605).

15. Use of grants made in connection with Urban Mass Transportation Technical Studies Grant Program—Urban Mass Transportation Act of 1964, as amended (49 U.S.C. 1607a).

16. Use of grants made in connection with Urban Mass Transportation Managerial Training Grant Program—Urban Mass Transportation Act of 1964, as amended (49 U.S.C. 1607b).

17. Use of grants made in connection with Urban Mass Transportation Grants for Research and Training Programs in Institutions of Higher Learning—Urban Mass Transportation Act of 1964, as amended (49 U.S.C. 1607c).

18. Use of grants made in connection with the High Speed Ground Transportation Act, as amended (49 U.S.C. 631–642).

APPENDIX B TO PART 21—ACTIVITIES TO WHICH THIS PART APPLIES WHEN A PRIMARY OBJECTIVE OF THE FEDERAL FINANCIAL ASSISTANCE IS TO PROVIDE EMPLOYMENT

1. Appalachia Regional Development Act of 1965 (40 U.S.C. App. 1 *et seq.*).

APPENDIX C TO PART 21—APPLICATION OF PART 21 TO CERTAIN FEDERAL FINANCIAL ASSISTANCE OF THE DEPARTMENT OF TRANSPORTATION

NONDISCRIMINATION ON FEDERALLY ASSISTED PROJECTS

(a) *Examples.* The following examples, without being exhaustive, illustrate the application of the nondiscrimination provisions of this part on projects receiving Federal financial assistance under the programs of certain Department of Transportation operating administrations:

(1) *Federal Aviation Administration.* (i) The airport sponsor or any of his lessees, concessionaires, or contractors may not differentiate between members of the public because of race, color, or national origin in furnishing, or admitting to, waiting rooms, passenger holding areas, aircraft tiedown areas, restaurant facilities, restrooms, or facilities operated under the compatible land use concept.

(ii) The airport sponsor and any of his lessees, concessionaires, or contractors must offer to all members of the public the same degree and type of service without regard to race, color, or national origin. This rule applies to fixed base operators, restaurants, snack bars, gift shops, ticket counters, baggage handlers, car rental agencies, limousines and taxis franchised by the airport sponsor, insurance underwriters, and other businesses catering to the public at the airport.

(iii) An aircraft operator may not be required to park his aircraft at a location that is less protected, or less accessible from the terminal facilities, than locations offered to others, because of his race, color, or national origin.

(iv) The pilot of an aircraft may not be required to help more extensively in fueling operations, and may not be offered less incidental service (such as windshield wiping), than other pilots, because of his race, color, or national origin.

(v) No pilot or crewmember eligible for access to a pilot's lounge or to unofficial communication facilities such as a UNICOM frequency may be restricted in that access because of his race, color, or national origin.

(vi) Access to facilities maintained at the airport by air carriers or commercial operators for holders of first-class transportation tickets or frequent users of the carrier's or operator's services may not be restricted on the basis of race, color, or national origin.

(vii) Passengers and crewmembers seeking ground transportation from the airport may not be assigned to different vehicles, or delayed or embarrassed in assignment to vehicles, by the airport sponsor or his lessees, concessionaires, or contractors, because of race, color, or national origin.

(viii) Where there are two or more sites having equal potential to serve the aeronautical needs of the area, the airport sponsor shall select the site least likely to adversely affect existing communities. Such site selection shall not be made on the basis of race, color, or national origin.

(ix) Employment at obligated airports, including employment by tenants and concessionaires shall be available to all regardless of race, creed, color, sex, or national origin. The sponsor shall coordinate his airport plan with his local transit authority and the Urban Mass Transportation Administration to assure public transportation, convenient to the disadvantaged areas of nearby communities to enhance employment opportunities for the disadvantaged and minority population.

(x) The sponsor shall assure that the minority business community in his area is advised of the opportunities offered by airport concessions, and that bids are solicited from such qualified minority firms, and awards made without regard to race, color, or national origin.

(2) *Federal Highway Administration.* (i) The State, acting through its highway department, may not discriminate in its selection and retention of contractors, including without limitation, those whose services are retained for, or incidental to, construction, planning, research, highway safety, engineering, property management, and fee contracts and other commitments with person for services and expenses incidental to the acquisition of right-of-way.

(ii) The State may not discriminate against eligible persons in making relocation payments and in providing relocation advisory assistance where relocation is necessitated by highway right-of-way acquisitions.

(iii) Federal-aid contractors may not discriminate in their selection and retention of first-tier subcontractors, and first-tier subcontractors may not discriminate in their selection and retention of second-tier subcontractors, who participate in Federal-aid highway construction, acquisition of right-of-way and related projects, including those who supply materials and lease equipment.

(iv) The State may not discriminate against the traveling public and business users of the federally assisted highway in their access to and use of the facilities and services provided for public accommodations (such as eating, sleeping, rest, recreation,

and vehicle servicing) constructed on, over or under the right-of-way of such highways.

(v) Neither the State, any other persons subject to this part, nor its contractors and subcontractors may discriminate in their employment practices in connection with highway construction projects or other projects assisted by the Federal Highway Administration.

(vi) The State shall not locate or design a highway in such a manner as to require, on the basis of race, color, or national origin, the relocation of any persons.

(vii) The State shall not locate, design, or construct a highway in such a manner as to deny reasonable access to, and use thereof, to any persons on the basis of race, color, or national origin.

(3) *Urban Mass Transportation Administration.* (i) Any person who is, or seeks to be, a patron of any public vehicle which is operated as a part of, or in conjunction with, a project shall be given the same access, seating, and other treatment with regard to the use of such vehicle as other persons without regard to their race, color, or national origin.

(ii) No person who is, or seeks to be, an employee of the project sponsor or lessees, concessionaires, contractors, licensees, or any organization furnishing public transportation service as a part of, or in conjunction with, the project shall be treated less favorably than any other employee or applicant with regard to hiring, dismissal, advancement, wages, or any other conditions and benefits of employment, on the basis of race, color, or national origin.

(iii) No person or group of persons shall be discriminated against with regard to the routing, scheduling, or quality of service of transportation service furnished as a part of the project on the basis of race, color, or national origin. Frequency of service, age and quality of vehicles assigned to routes, quality of stations serving different routes, and location of routes may not be determined on the basis of race, color, or national origin.

(iv) The location of projects requiring land acquisition and the displacement of persons from their residences and businesses may not be determined on the basis of race, color, or national origin.

(b) *Obligations of the airport operator*— (1) *Tenants, contractors, and concessionaires.* Each airport operator shall require each tenant, contractor, and concessionaire who provides any activity, service, or facility at the airport under lease, contract with, or franchise from the airport, to covenant in a form specified by the Administrator, Federal Aviation Administration, that he will comply with the nondiscrimination requirements of this part.

(2) *Notification of beneficiaries.* The airport operator shall: (i) Make a copy of this part available at his office for inspection during normal working hours by any person asking for it, and (ii) conspicuously display a sign, or signs, furnished by the FAA, in the main public area or areas of the airport, stating that discrimination based on race, color, or national origin is prohibited on the airport.

(3) *Reports.* Each airport owner subject to this part shall, within 15 days after he receives it, forward to the Area Manager of the FAA Area in which the airport is located a copy of each written complaint charging discrimination because of race, color, or national origin by any person subject to this part, together with a statement describing all actions taken to resolve the matter, and the results thereof. Each airport operator shall submit to the area manager of the FAA area in which the airport is located a report for the preceding year on the date and in a form prescribed by the Federal Aviation Administrator.

[35 FR 10080, June 18, 1970, as amended by Amdt. 21–1, 38 FR 5875, Mar. 5, 1973; Amdt. 21–3, 40 FR 14318, Mar. 31, 1975]

PART 23—PARTICIPATION BY DISADVANTAGED BUSINESS ENTERPRISE IN AIRPORT CONCESSIONS

Subparts A–E [Reserved]

Subpart F—Implementation of Section 511(a)(17) of the Airport and Airway Improvement Act of 1982, as Amended

Sec.

23.89 Definitions.
23.91 Applicability.
23.93 Requirements for airport sponsors.
23.95 Elements of Disadvantaged Business Enterprise (DBE) concession plan.
23.97 Appeals of certification denials.
23.99 Rationale for basing overall goals on the number of concession agreements.
23.101 Information required when none of the overall annual goals is 10 percent or more.
23.103 Obligations of concessionaires and competitors.
23.105 Privately-owned terminal buildings.
23.107 Prohibition on long-term, exclusive concession agreements.
23.109 Compliance procedures.
APPENDIX A TO SUBPART F—SIZE STANDARDS FOR AIRPORT CONCESSIONAIRES
SCHEDULE A—INFORMATION FOR DETERMINING MINORITY BUSINESS ENTERPRISE ELIGIBILITY
SCHEDULE B—INFORMATION FOR DETERMINING JOINT VENTURE ELIGIBILITY

AUTHORITY: 42 U.S.C. 200d *et seq.*; 49 U.S.C. 47107 and 47123; Executive Order 12138, 3 CFR, 1979 Comp., p. 393.

SOURCE: 45 FR 21184, Mar. 31, 1980, unless otherwise noted.

Subparts A–E [Reserved]

Subpart F—Implementation of Section 511(a)(17) of the Airport and Airway Improvement Act of 1982, as Amended

SOURCE: Amdt. 1, 57 FR 18410, Apr. 30, 1992, unless otherwise noted.

§ 23.89 Definitions.

Affiliation has the same meaning the term has in regulations of the Small Business Administration, 13 CFR part 121. Except as otherwise provided in 13 CFR part 121, concerns are affiliates of each other when, either directly or indirectly

(a) One concern controls or has the power to control the other, or

(b) A third party or parties controls or has the power to control both, or

(c) An ''identity of interest'' between or among parties exists such that affiliation may be found.

In determining whether affiliation exists, consideration shall be given to all appropriate factors, including common ownership, common management, and contractual relationships.

Concession means a for-profit business enterprise, located on an airport subject to this subpart, that is engaged in the sale of consumer goods or services to the public under an agreement with the sponsor, another concessionaire, or the owner of a terminal, if other than the sponsor. Businesses which conduct an aeronautical activity are not considered concessionaires for purposes of this subpart. Aeronautical activities include scheduled and nonscheduled air carriers, air taxis, air charters, and air couriers, in their normal passenger or freightcarrying capacities; fixed base operators, flight schools; and sky-diving, parachute-jumping, flying guide services, and helicopter or other air tours.

(a) Appendix A to this subpart contains a listing of the types of businesses that are frequently operated as concessions.

(b) Examples of entities that do not meet the definition of a concession include suppliers, flight kitchens and inflight caterers servicing air carriers, government agencies, industrial plants, farm leases, individuals leasing hangar space, custodial and security contracts, individual taxis with permits, telephone and electric utilities, skycap services under contract with an air carrier, and management contracts.

(c) Concessions may be operated under the following types of agreements:

(1) Leases.

(2) Subleases.

(3) Permits.

(4) Contracts.

(5) Other instruments or arrangements.

Concessionaire means one who operates a concession.

Disadvantaged business shall have the same meaning as set forth in 49 CFR part 26, except it shall be a small business concern, as defined in this subpart, not as defined in 49 CFR part 26.

Material amendment means a substantial change to the basic rights or obligations of the parties to a concession agreement. Examples of material amendments include an extension to the term not provided for in the original agreement or a substantial increase in the scope, of the concession privilege. Examples of nonmaterial amendments include a change in the name of the concessionaire or a change to the payment due dates.

Primary airport means a commercial service airport which is determined by the Secretary to have more than 10,000 passengers enplaned annually.

Small business concern means a firm, including all its domestic and foreign affiliates, that qualifies under the applicable size standard set forth in appendix A to this subpart. In making a size determination, all affiliates, regardless of whether organized for profit, must be included. A firm qualifying under this definition that exceeds the size standard after entering a concession agreement, but that otherwise remains eligible, may continue to be counted as DBE participation until the current agreement, including the exercise of options, expires.

(a) The Secretary may periodically adjust the size standards in appendix A to this subpart for inflation.

(b) A firm that was certified as a minority/woman/or disadvantaged business enterprise (MBE/WBE/DBE) prior to the effective date of this subpart, pursuant to a requirement in §23.43(d) in effect prior to March 4, 1999 (See 49 CFR Parts 1 to 99 revised as of October 1, 1998.) or FAA guidance implementing section 511(a)(17) of the Airport and Airway Improvement Act of 1982, as amended, that has exceeded the size standard, may be counted as DBE participation until the current agreement, including the exercise of options, expires, provided that the firm remains otherwise eligible.

Socially and economically disadvantaged individuals shall have the same meaning as set forth in 49 CFR part 26.

Sponsor means the recipient of an FAA grant.

[Amdt. 1, 57 FR 18410, Apr. 30, 1992, as amended at 64 FR 5126, Feb. 2, 1999]

§23.91 Applicability.

This subpart applies to any sponsor that has received a grant for airport development authorized by the Airport and Airway Improvement Act of 1982, as amended by the Airport and Airway Safety and Capacity Expansion Act of 1987.

§23.93 Requirements for airport sponsors.

(a) *General requirements.* (1) Each sponsor shall abide by the nondiscrimination requirements of §26.7 with respect to the award and performance of any concession agreement covered by this subpart.

(2) Each sponsor shall take all necessary and reasonable steps to foster participation by DBE's in its airport concession activities.

(3) The following statements shall be included in all concession agreements executed between the sponsor and any firm after the effective date of this subpart.

(i) ''This agreement is subject to the requirements of the U.S. Department of Transportation's regulations, 49 CFR part 23, subpart F. The concessionaire agrees that it will not discriminate against any business owner because of the owner's race, color, national origin, or sex in connection with the award or performance of any concession agreement covered by 49 CFR part 23, subpart F.

(ii) ''The concessionaire agrees to include the above statements in any subsequent concession agreements that it enters and cause those businesses to similarly include the statements in further agreements.''

(b) *Additional requirements for primary airports* (1) Sponsors of primary airports shall implement a disadvantaged business enterprise (DBE) concession plan containing the elements listed in §23.95. Sponsors of more than one primary airport shall implement a separate plan for each location that has received assistance for airport development. The plan shall be submitted to the appropriate FAA Regional Office for approval.

(2) The sponsor shall review and update the plan at least annually. The updated plan shall include any information required under §23.95 that was not available to the sponsor when the previous submission was made. Updated plans shall be submitted to the appropriate FAA Regional Office for approval.

(c) *Additional requirements for nonprimary airports.* Sponsors of commercial service airports (except primary), general aviation and reliever airports are not required to implement a DBE concession plan but shall take appropriate outreach steps to encourage available DBE's to participate as concessionaires whenever there is a concession opportunity.

[Amdt. 1, 57 FR 18410, Apr. 30, 1992, as amended at 64 FR 5126, Feb. 2, 1999]

§23.95 Elements of Disadvantaged Business Enterprise (DBE) concession plan.

(a) *Overall annual DBE goals.* (1) The sponsor shall establish an overall goal for the participation of DBE's in concessions for each 12-month period covered by the plan. The goals shall be consistent with the process for setting overall goals set forth in 49 CFR 26.45.

(2) Sponsors shall calculate the overall DBE goal as a percentage of one of the following bases:

(i) The estimated gross receipts that will be earned by all concessions operating at the airport during the goal period. (Where the terms of a concession

agreement do not provide for the sponsor to know the gross receipts, the sponsor shall use the net payment to the airport for such agreements and combine these figures with the estimated gross receipts from other agreements, for purposes of making this calculation. The plan shall indicate which concession agreements do not provide for the sponsor to know the gross receipts.)

(ii) The total number of concession agreements operating at the airport during the goal period.

(3) The plan shall state which base the sponsor proposes to use for calculating the overall goals. Sponsors proposing to use the base described in paragraph (a)(2)(ii) of this section shall submit a rationale as required by § 23.99.

(4) Sponsors who will employ the procedures of paragraph (a)(2)(i) of this section shall exclude from the overall goal any portion of a firm's estimated gross receipts that will not be generated from a concession activity.

Example. A firm operates a restaurant in the airport terminal which services the travelling public and under the same lease agreement, provides in-flight catering service to the air carriers. The projected gross receipts from the restaurant are included in the overall goal calculation, while the gross receipts to be earned by the in-flight catering service are excluded.

(5) Sponsors who will employ the procedures of paragraph (a)(2)(i) of this section shall use the net payment to the airport for banks and banking services, including automated teller machines (ATM) and foreign currency exchanges.

(6) To the extent practicable, sponsors shall seek to obtain DBE participation in all types of concession activities and not concentrate participation in one category or a few categories to the exclusion of others.

(7) Airport sponsors may establish an overall annual goal exceeding 10 percent.

(b) *Goal methodology.* (1) The plan shall contain a description of the methodology used in establishing each of the overall DBE goals. The methodology shall include information on the concessions that will operate at the airport during the period covered by the plan and the potential for DBE participation. For each concession agreement, the sponsor shall provide the following information, together with an additional information requested by the Regional Civil Rights Officer:

(i) Name of firm.

(ii) Type of business (e.g. bookstore, car rental, baggage carts).

(iii) Beginning and expiration dates of agreement, including options to renew.

(iv) For new agreements, method of solicitation proposed by sponsor (e.g. request for proposals, invitation for bids).

(v) Dates that material amendments will be made to the agreement (if known).

(vi) Estimated gross receipts for each goal period established in the plan.

(vii) Identification of those concessionaires that have been certified under this subpart as DBE's.

(viii) An indication of those concessions having potential for participation by DBE's.

(2) The plan shall include a narrative description of the types of efforts the sponsor intends to make, in accordance with paragraph (h) of this session, to achieve the overall annual goals.

(3) Sponsors who will include a DBE contract goal or other requirements in solicitations for concession agreements shall state those requirements in the plan.

(4) If none of the overall goals set under paragraph (a)(2)(i) or (a)(2)(ii) of this section is 10 percent or more, the sponsor shall submit the information and follow the procedures outlined in § 23.101.

(c) *DBE set-asides.* (1) Where not prohibited by state or local law and determined by the sponsor to be necessary to meet DBE goals, procedures to implement DBE set-asides shall be established. The DBE plan shall specify the concessions to be set-aside.

(2) If a state or local law prohibits the use of set-asides in the award of concessions, a citation of the appropriate authority shall be included in the plan.

(d) *Accomplishments in achieving DBE goals.* The plan shall contain an analysis of the accomplishments made by

the sponsor toward achieving the previous year's goal. The plan shall show the effect of those results on the overall level of DBE participation in the airport's concessions.

(e) *Explanation for not achieving a goal.* (1) If the analysis required under paragraph (d) of this section indicates that the sponsor failed to meet the previous year's overall goal, the plan shall include a statement of the reasons demonstrating why failure to meet the goal was beyond the sponsor's control.

(2) If the FAA determines that the reasons given by the sponsor are not sufficient justification, or if the sponsor fails to state any reasons, the FAA may require the sponsor to implement appropriate remedial measures. Such measures may include an adjustment to the overall goals of the concession plan.

(f) *Certification procedures.* (1) The certification procedures set forth in 49 CFR part 26, subpart E are applicable to this subpart. Sponsors may count toward their overall goals only those firms that have been certified in accordance with the procedures of that section.

(2)–(3) [Reserved]

(4) Prior to making a certification determination, the sponsor shall perform an on-site visit to the offices of the firm and to any of its facilities that may be necessary to validate the certification information obtained from the firm.

(g) *Certification standards.* (1) Sponsors shall use the same standards for ownership and control as contained in 49 CFR part 26, subpart D in determining whether a firm may be certified as a DBE.

(2) Businesses operating under the following structures may be eligible for certification as DBE's under this subpart:

(i) Sole proprietorships.

(ii) Corporations.

(iii) Partnerships.

(iv) Other structures that provide for ownership and control by the socially and economically disadvantaged owners.

(3) A business operating under a franchise (or license) agreement may be certified if it meets the standards in this section and the franchisor is not affiliated with the franchisee.

In determining whether affiliation, as defined in §23.89, exists, the restraints relating to standardized quality, advertising, accounting format, and other provisions imposed on a franchisee by its franchise agreement generally shall not be considered, provided that the franchisee has the right to profit from its efforts and bears the risk of loss commensurate with ownership. Alternatively, even though a franchisee may not be controlled by the franchisor by virtue of such provisions in the franchise agreement, control, and, thus, affiliation could arise through other means, such as common management or excessive restrictions upon the sale of the franchise interest.

(4) Joint ventures described in §23.53(d) are eligible for certification as DBE's under this subpart.

(h) Businesses operating under the following arrangements are not eligible for certification as DBE's under this subpart:

(1) Limited partnerships, in which a non-DBE is the general partner.

(2) Other arrangements that do not provide for ownership and control by the socially and economically disadvantaged owners.

(i) *Good faith efforts.* The sponsor shall make good faith efforts to achieve the overall goals of the approved plan. The efforts shall include:

(1) Locating and identifying DBE's who may be interested in participating as concessionaires;

(2) Notifying DBE's and other organizations of concession opportunities and encouraging them to compete, when appropriate;

(3) Informing competitors for concession opportunities of any DBE requirements during pre-solicitation meetings;

(4) Providing information concerning the availability of DBE firms to competitors to assist them in meeting DBE requirements; and

(5) When practical, structuring contracting activities so as to encourage and facilitate the participation of DBE's.

[Amdt. 1, 57 FR 18410, Apr. 30, 1992, as amended at 64 FR 5126, Feb. 2, 1999; 64 FR 34570, June 28, 1999]

§ 23.97 Appeals of certification denials.

The procedures concerning the appeal of a denial of certification set forth in 49 CFR 26.89 are applicable to this subpart.

[Amdt. 1, 57 FR 18410, Apr. 30, 1992, as amended at 64 FR 5126, Feb. 2, 1999]

§ 23.99 Rationale for basing overall goals on the number of concession agreements.

(a) A sponsor who proposes to calculate the overall DBE goals as a percentage of the number of concession agreements shall submit information with the DBE plan to demonstrate that one of the following applies to the airport:

(1) In order to attain an overall DBE goal of 10 percent on the basis of gross receipts, the airport would need to award a disproportionate percentage of the opportunities to DBE's. This rationale may address a time period that extends beyond that covered by the current plan; or

(2) Other circumstances at the airport exist that do not make it feasible to use gross receipts as the basis for calculating the goals.

(b) If the FAA approves of the request, the sponsor shall not be required to provide further justification during subsequent years of the plan, unless requested by the FAA to do so.

(c) If the FAA determines that the information submitted by the sponsor fails to justify the requested goal-setting procedure, the sponsor shall resubmit the plan. The goals in the revised plan shall be calculated as a percentage of gross receipts, as outlined in paragraph (a)(2)(i) of § 23.95.

§ 23.101 Information required when none of the overall annual goals is 10 percent or more.

(a) A sponsor requesting approval for a concession plan in which none of the overall annual DBE goals is 10 percent or more shall provide information on the following points:

(1) The sponsor's efforts to locate DBE's in the relevant geographic area that are capable of operating the concessions that will become available;

(2) The sponsor's efforts to notify DBE's of concession opportunities and to encourage them to compete;

(3) Any consideration given by the sponsor, when practical, to structuring contracting procedures so as to encourage and facilitate DBE participation. For example, a sponsor may consider using competitive means to award a concession that would otherwise be renegotiated without competition.

(4) If appropriate, an explanation why the nature of a particular concession makes DBE participation through a sublease, joint venture, partnership, or other arrangement not economically feasible.

(b) The FAA regional civil rights officer approves a plan which does not contain any overall goals of at least 10 percent if he or she determines that based on the information submitted by the sponsor under paragraph (a) of this section and any other available information;

(1) The sponsor is making all appropriate efforts to increase DBE participation in its concessions to a level of 10 percent; and

(2) Despite the sponsor's efforts, the goals submitted by the sponsor represent the reasonable expectation for DBE participation, given the availability of DBE's.

§ 23.103 Obligations of concessionaires and competitors.

(a) Sponsors may impose requirements on competitors for concession agreements as a means of achieving the DBE goals or a portion of the goals established under paragraph (a) of § 23.91 of this subpart, provided that the DBE participation specified in the solicitation or other request is an eligible arrangement, as defined in this subpart.

(b) Nothing in this subpart shall require any sponsor to modify or abrogate an existing concession agreement (one executed prior to the date the sponsor became subject to this subpart) during its term. When options to renew such agreements are exercised or when a material amendment is made to the agreement, the sponsor shall assess the potential for DBE participation and include any opportunities in the goals established under paragraph (a) of § 23.95.

§ 23.105 Privately-owned terminal buildings.

(a) Awards of concession agreements that are made by private owners of terminal buildings are covered by this subpart. Airport sponsors subject to this subpart shall levy the applicable requirements on the terminal owner through the agreement with the owner or by other means, except that certification shall, in the case of primary airports, be performed by the airport sponsor. The sponsor shall ensure that the terminal owner complies with these requirements.

(b) If the terminal building is at a primary airport, the sponsor shall obtain from the terminal owner the overall goals and other elements of the DBE concession plan required under § 23.95. This information shall be incorporated into the concession plan and goals established by the sponsor and submitted to the FAA in accordance with this subpart.

(c) If the terminal building is at a commercial service airport (except primary), general aviation, or reliever airport, the sponsor shall ensure that the owner complies with the requirements in paragraph (c) of § 23.93.

§ 23.107 Prohibition on long-term, exclusive concession agreements.

(a) Except as provided in paragraph (b) of this section, sponsors shall not enter into long-term, exclusive agreements for the operation of concessions. For purposes of this section, a long-term agreement is one having a term in excess of five years. Guidelines for determining whether an agreement is exclusive, as used in this section, have been included in the FAA's ''DBE Program Development Kit for Airport Grant-in-Aid Recipients.'' This publication can be obtained from any FAA Regional Civil Rights Officer or from the FAA Office of Civil Rights, 800 Independence Avenue, SW., Washington, DC 20591, Attention, ACR–4.

(b) A long-term, exclusive agreement is permitted under this subpart, provided that;

(1) Special local circumstances exist that make it important to enter such agreement, and

(2) The responsible FAA regional civil rights officer approves of a plan for ensuring adequate DBE participation throughout the term of the agreement.

(c) Approval of the plan referenced in paragraph (b)(2) of this section relieves the sponsor of the need to obtain an exemption under the procedures of § 23.41(f) and the Notice of Policy (45 FR 45281, July 3, 1980). The Notice of Policy can be obtained from the FAA Office of Civil Rights at the address given in paragraph (a) of this section.

(d) Sponsors shall submit the following information with the plan referenced in paragraph (b)(2) of this section:

(1) A description of the special local circumstances that warrant a long-term, exclusive agreement, e.g., a requirement to make certain capital improvements to a leasehold facility.

(2) A copy of the draft and final leasing and subleasing or other agreements. The long-term, exclusive agreement shall provide that:

(i) One or more DBE's will participate throughout the term of the agreement and account for at least 10 percent of the annual estimated gross receipts.

(ii) The extent of DBE participation will be reviewed prior to the exercise of each renewal option to consider whether an increase is warranted. (In some instances, a decrease may be warranted.)

(iii) A DBE that is unable to perform successfully will be replaced by another DBE, if the remaining term of the agreement makes this feasible.

(3) Assurances that the DBE participation will be in an acceptable form, such as a sublease, joint venture, or partnership.

(4) Documents used by the sponsor in certifying the DBE's.

(5) A description of the type of business or businesses to be operated, location, storage and delivery space, ''back-of-the-house facilities'' such as kitchens, window display space, advertising space, and other amenities that will increase the DBE's chance to succeed.

(6) Information on the investment required on the part of the DBE and any unusual management or financial arrangements between the prime concessionaire and DBE.

(7) Information on the estimated gross receipts and net profit to be earned by the DBE.

§ 23.109 Compliance procedures.

In the event of noncompliance with this subpart by a sponsor, the FAA Administrator may take any action provided for in section 519 of the Airport and Airway Improvement Act of 1982, as amended.

APPENDIX A TO SUBPART F—SIZE STANDARDS FOR AIRPORT CONCESSIONAIRES

MAXIMUM AVERAGE ANNUAL GROSS RECEIPTS IN PRECEDING 3 YEARS

[In millions of dollars]

Concession	Amount
Food and beverage	30.00
Book stores	30.00
Auto rental	40.00
Banks	[1] 100.00
Hotels and motels	30.00
Insurance machines and counters	30.00
Gift, novelty, and souvenir shop	30.00
Newstands	30.00
Shoe shine stands	30.00
Barber shops	30.00
Automobile parking	30.00
Jewelry stores	30.00
Liquor stores	30.00
Travel agencies	30.00
Drug stores	30.00
Pastries and baked goods	30.00
Luggage cart rental	30.00
Coin-operated T.V.'s	30.00
Game rooms	30.00
Luggage and leather goods stores	30.00
Candy, nut, and confectionery stores	30.00
Toy stores	30.00
Beauty shops	30.00
Vending machines	30.00
Coin-operated lockers	30.00
Florists	30.00
Advertising	30.00
Taxicab	30.00
Limousines	30.00
Duty free shops	30.00
Pay telephones	[2] 1,500
Gambling machines	30.00
Other concessions not shown above	30.00

[1] As measured by total assets
[2] As measured by number of employees.

SCHEDULE A—INFORMATION FOR DETERMINING MINORITY BUSINESS ENTERPRISE ELIGIBILITY

1. Name of firm
2. Address of firm
3. Phone Number of firm
4. Indicate whether firm is sole proprietorship, partnership, joint venture, corporation or other business entity (please specify)

—

5. Nature of firm's business
6. Years firm has been in business
7. Ownership of firm: Identify those who own 5 percent or more of the firm's ownership. Columns e and f need be filled out only if the firm is less than 100 percent minority owned.

a—Name	b—Race	c—Sex	d—Years of ownership	e—Ownership percentage	f—Voting percentage

With firms less than 100 percent minority owned, list the contributions of money, equipment, real estate, or expertise of each of the owners.

8. Control of firm: (a) Identify by name, race, sex, and title in the firm those individuals (including owners and non-owners) who are responsible for day-to-day management and policy decisionmaking, including, but not limited to, those with prime responsibility for:

(1) Financial decisions
(2) Management decisions, such as—
a. Estimating
b. Marketing and sales
c. Hiring and firing of management personnel
d. Purchases of major items or supplies
(3) Supervision of field operations

9. For each of those listed in question 8, provide a *brief* summary of the person's experience and number of years with the firm, indicating the person's qualifications for the responsibilities given him or her.

10. Describe or attach a copy of any stock options or other ownership options that are outstanding, and any agreements between owners or between owners and third parties which restrict ownership or control of minority owners.

11. Identify any owner (see item 7) or management official (see item 8) of the named firm who is or has been an employee of another firm that has an ownership interest in or a present business relationship with the named firm. Present business relationships include shared space, equipment, financing, or employees as well as both firms having some of the same owners.

12. What are the gross receipts of the firm for each of the last two years?

Year ending
$
Year ending
$

13. Name of bonding company, if any:

—

Bonding limit
Source of letters of credit, if any

14. Are you authorized to do business in the state as well as locally, including all necessary business licenses?

15. Indicate if this firm or other firms with any of the same officers have previously received or been denied certification or participation as an MBE and describe the circumstances. Indicate the name of the certifying authority and the date of such certification or denial.

AFFIDAVIT

''The undersigned swears that the foregoing statements are true and correct and include all material information necessary to identify and explain the operations of ——— (name of firm) as well as the ownership thereof. Further, the undersigned agrees to provide through the prime contractor or, if no prime, directly to the grantee current, complete and accurate information regarding actual work performed on the project, the payment therefor and any proposed changes, if any, of the foregoing arrangements and to permit the audit and examination of books, records and files of the named firm. Any material misrepresentation will be grounds for terminating any contract which may be awarded and for initiating action under Federal or State laws concerning false statements.''

NOTE: If, after filing this Schedule A and before the work of this firm is completed on the contract covered by this regulation, there is any significant change in the information submitted, you must inform the grantee of the change through the prime contractor or, if no prime contractor, inform the grantee directly.

Signature
Name
Title
Date
Corporate Seal (where appropriate).
Date
State of
County of
On this — day of ——, 19—, before me appeared (Name) ———, to me personally known, who, being duly sworn, did execute the foregoing affidavit, and did state that he or she was properly authorized by (Name of firm) ——— to execute the affidavit and did so as his or her free act and deed.
[Seal]
Notary Public
Commission expires

SCHEDULE B—INFORMATION FOR DETERMINING JOINT VENTURE ELIGIBILITY

(This form need not be filled in if all joint venture firms are minority owned.)

1. Name of joint venture
2. Address of joint venture
3. Phone number of joint venture
4. Identify the firms which comprise the joint venture. (The MBE partner must complete Schedule A.)

(a) Describe the role of the MBE firm in the joint venture.

(b) Describe very briefly the experience and business qualifications of each non-MBE joint venturer:

5. Nature of the joint venture's business

6. Provide a copy of the joint venture agreement.
7. What is the claimed percentage of MBE ownership?
8. Ownership of joint venture: (This need not be filled in if described in the joint venture agreement, provided by question 6.)
(a) Profit and loss sharing.
(b) Capital contributions, including equipment.
(c) Other applicable ownership interests.
9. Control of and participation in this contract. Identify by name, race, sex, and ''firm'' those individuals (and their titles) who are responsible for day-to-day management and policy decisionmaking, including, but not limited to, those with prime responsibility for:
(a) Financial decisions
(b) Management decisions, such as:
(1) Estimating
(2) Marketing and sales
(3) Hiring and firing of management personnel
(4) Purchasing of major items or supplies

(c) Supervision of field operations

NOTE: If, after filing this Schedule B and before the completion of the joint venture's work on the contract covered by this regulation, there is any significant change in the information submitted, the joint venture must inform the grantee, either directly or through the prime contractor if the joint venture is a subcontractor.

AFFIDAVIT

''The undersigned swear that the foregoing statements are correct and include all material information necessary to identify and explain the terms and operation of our joint venture and the intended participation by each joint venturer in the undertaking. Further, the undersigned covenant and agree to provide to the grantee current, complete and accurate information regarding actual joint venture work and the payment therefor and any proposed changes in any of the joint venture arrangements and to permit the audit and examination of the books, records and files of the joint venture, or those of each joint venturer relevant to the joint venture, by authorized representatives of the grantee or the Federal funding agency. Any material misrepresentation will be grounds for terminating any contract which may be awarded

and for initiating action under Federal or State laws concerning false statements.''

Name of Firm	Name of Firm
Signature	Signature
Name	Name
Title	Title
Date	Date

Date
State of
County of
On this — day of ——, 19—, before me appeared (Name) ———, to me personally known, who, being duly sworn, did execute the foregoing affidavit, and did state that he or she was properly authorized by (Name of firm) ——— to execute the affidavit and did so as his or her free act and deed.
Notary Public
Commission expires
[Seal]
Date
State of
County of
On this — day of ——, 19—, before me appeared (Name) ———, to me personally known, who, being duly sworn, did execute the foregoing affidavit, and did state that he or she was properly authorized by (Name of firm) ——— to execute the affidavit and did so as his or her free act and deed.
Notary Public
Commission expires
[Seal]

PART 24—UNIFORM RELOCATION ASSISTANCE AND REAL PROPERTY ACQUISITION FOR FEDERAL AND FEDERALLY ASSISTED PROGRAMS

Subpart A—General

Sec.
24.1 Purpose.
24.2 Definitions.
24.3 No duplication of payments.
24.4 Assurances, monitoring and corrective action.
24.5 Manner of notices.
24.6 Administration of jointly-funded projects.
24.7 Federal agency waiver of regulations.
24.8 Compliance with other laws and regulations.
24.9 Recordkeeping and reports.
24.10 Appeals.

Subpart B—Real Property Acquisition

24.101 Applicability of acquisition requirements.
24.102 Basic acquisition policies.
24.103 Criteria for appraisals.
24.104 Review of appraisals.
24.105 Acquisition of tenant-owned improvements.
24.106 Expenses incidental to transfer of title to the Agency.
24.107 Certain litigation expenses.
24.108 Donations.

Subpart C—General Relocation Requirements

24.201 Purpose.
24.202 Applicability.
24.203 Relocation notices.
24.204 Availability of comparable replacement dwelling before displacement.
24.205 Relocation planning, advisory services, and coordination.
24.206 Eviction for cause.
24.207 General requirements—claims for relocation payments.
24.208 Aliens not lawfully present in the United States.
24.209 Relocation payments not considered as income.

Subpart D—Payments for Moving and Related Expenses

24.301 Payment for actual reasonable moving and related expenses—residential moves.
24.302 Fixed payment for moving expenses—residential moves.
24.303 Payment for actual reasonable moving and related expenses—nonresidential moves.
24.304 Reestablishment expenses—nonresidential moves.
24.305 Ineligible moving and related expenses.
24.306 Fixed payment for moving expenses—nonresidentia1 moves.
24.307 Discretionary utility relocation payments.

Subpart E—Replacement Housing Payments

24.401 Replacement housing payment for 180-day homeowner-occupants.
24.402 Replacement housing payment for 90-day occupants.
24.403 Additional rules governing replacement housing payments.
24.404 Replacement housing of last resort.

Subpart F—Mobile Homes

24.501 Applicability.
24.502 Moving and related expenses—mobile homes.

24.503 Replacement housing payment for 180-day mobile homeowner-occupants.
24.504 Replacement housing payment for 90-day mobile home occupants.
24.505 Additional rules governing relocation payments to mobile home occupants.

Subpart G—Certification

24.601 Purpose.
24.602 Certification application.
24.603 Monitoring and corrective action.

APPENDIX A TO PART 24—ADDITIONAL INFORMATION
APPENDIX B TO PART 24—STATISTICAL REPORT FORM

AUTHORITY: 42 U.S.C. 4601 *et seq.*; 49 CFR 1.48(cc).

SOURCE: 54 FR 8928, Mar. 2, 1989, unless otherwise noted.

Subpart A—General

§24.1 Purpose.

The purpose of this part is to promulgate rules to implement the Uniform Relocation Assistance and Real Property Acquisition Policies Act of 1970, as amended (42 U.S.C. 4601 *et seq.*), in accordance with the following objectives:

(a) To ensure that owners of real property to be acquired for Federal and federally-assisted projects are treated fairly and consistently, to encourage and expedite acquisition by agreements with such owners, to minimize litigation and relieve congestion in the courts, and to promote public confidence in Federal and federally-assisted land acquisition programs;

(b) To ensure that persons displaced as a direct result of Federal or federally-assisted projects are treated fairly, consistently, and equitably so that such persons will not suffer disproportionate injuries as a result of projects designed for the benefit of the public as a whole; and

(c) To ensure that Agencies implement these regulations in a manner that is efficient and cost effective.

[54 FR 8928, Mar. 2, 1989; 54 FR 24712, June 9, 1989]

§24.2 Definitions.

Agency. The term *Agency* means the Federal agency, State, State agency, or person that acquires real property or displaces a person.

(1) *Acquiring agency*. The term *acquiring agency* means a State agency, as defined in paragraph (a)(4) of this section, which has the authority to acquire property by eminent domain under State law, and a State agency or person which does not have such authority. Any Agency or person solely acquiring property pursuant to the provisions of §24.101(a) (1), (2), (3), or (4) need not provide the assurances required by §24.4(a)(1) or (2).

(2) *Displacing agency*. The term *displacing agency* means any Federal agency carrying out a program or project, and any State, State agency, or person carrying out a program or project with Federal financial assistance, which causes a person to be a displaced person.

(3) *Federal agency*. The term *Federal agency* means any department, Agency, or instrumentality in the executive branch of the Government, any wholly owned Government corporation, the Architect of the Capitol, the Federal Reserve Banks and branches thereof, and any person who has the authority to acquire property by eminent domain under Federal law.

(4) *State agency*. The term *State agency* means any department, Agency or instrumentality of a State or of a political subdivision of a State, any department, Agency, or instrumentality of two or more States or of two or more political subdivisions of a State or States, and any person who has the authority to acquire property by eminent domain under State law.

Alien not lawfully present in the United States. The phrase ''alien not lawfully present in the United States'' means an alien who is not ''lawfully present'' in the United States as defined in 8 CFR 103.12 and includes:

(1) An alien present in the United States who has not been admitted or paroled into the United States pursuant to the Immigration and Nationality Act and whose stay in the United States has not been authorized by the United States Attorney General, and

(2) An alien who is present in the United States after the expiration of the period of stay authorized by the United States Attorney General or who

otherwise violates the terms and conditions of admission, parole or authorization to stay in the United States.

Appraisal. The term *appraisal* means a written statement independently and impartially prepared by a qualified appraiser setting forth an opinion of defined value of an adequately described property as of a specific date, supported by the presentation and analysis of relevant market information.

Business. The term *business* means any lawful activity, except a farm operation, that is conducted:

(1) Primarily for the purchase, sale, lease and/or rental of personal and/or real property, and/or for the manufacture, processing, and/or marketing of products, commodities, and/or any other personal property; or

(2) Primarily for the sale of services to the public; or

(3) Primarily for outdoor advertising display purposes, when the display must be moved as a result of the project; or

(4) By a nonprofit organization that has established its nonprofit status under applicable Federal or State law.

Citizen. The term ''citizen,'' for purposes of this part, includes both citizens of the United States and noncitizen nationals.

Comparable replacement dwelling. The term *comparable replacement dwelling* means a dwelling which is:

(1) Decent, safe and sanitary as described in paragraph (f) of this section;

(2) Functionally equivalent to the displacement dwelling. The term *functionally equivalent* means that it performs the same function, provides the same utility, and is capable of contributing to a comparable style of living. While a comparable replacement dwelling need not possess every feature of the displacement dwelling, the principal features must be present. Generally, functional equivalency is an objective standard, reflecting the range of purposes for which the various physical features of a dwelling may be used. However, in determining whether a replacement dwelling is functionally equivalent to the displacement dwelling, the Agency may consider reasonable trade-offs for specific features when the replacement unit is *equal to or better than* the displacement dwelling. (See appendix A of this part);

(3) Adequate in size to accommodate the occupants;

(4) In an area not subject to unreasonable adverse environmental conditions;

(5) In a location generally not less desirable than the location of the displaced person's dwelling with respect to public utilities and commercial and public facilities, and reasonably accessible to the person's place of employment;

(6) On a site that is typical in size for residential development with normal site improvements, including customary landscaping. The site need not include special improvements such as outbuildings, swimming pools, or greenhouses. (See also § 24.403(a)(2).);

(7) Currently available to the displaced person on the private market. However, a comparable replacement dwelling for a person receiving government housing assistance before displacement may reflect similar government housing assistance. (See appendix A of this part.); and

(8) Within the financial means of the displaced person.

(i) A replacement dwelling purchased by a homeowner in occupancy at the displacement dwelling for at least 180 days prior to initiation of negotiations (180-day homeowner) is considered to be within the homeowner's financial means if the homeowner will receive the full price differential as described in § 24.401(c), all increased mortgage interest costs as described at § 24.401(d) and all incidental expenses as described at § 24.401(e), plus any additional amount required to be paid under § 24.404, Replacement housing of last resort.

(ii) A replacement dwelling rented by an eligible displaced person is considered to be within his or her financial means if, after receiving rental assistance under this part, the person's monthly rent and estimated average monthly utility costs for the replacement dwelling do not exceed the person's base monthly rental for the displacement dwelling as described at § 24.402(b)(2).

(iii) For a displaced person who is not eligible to receive a replacement housing payment because of the person's failure to meet length-of-occupancy requirements, comparable replacement rental housing is considered to be within the person's financial means if an Agency pays that portion of the monthly housing costs of a replacement dwelling which exceeds 30 percent of such person's gross monthly household income or, if receiving a welfare assistance payment from a program that designates amounts for shelter and utilities, the total of the amounts designated for shelter and utilities. Such rental assistance must be paid under §24.404, Replacement housing of last resort.

Contribute materially. The term *contribute materially* means that during the 2 taxable years prior to the taxable year in which displacement occurs, or during such other period as the Agency determines to be more equitable, a business or farm operation:

(1) Had average annual gross receipts of at least $5000; or

(2) Had average annual net earnings of at least $1000; or

(3) Contributed at least 33⅓ percent of the owner's or operator's average annual gross income from all sources.

(4) If the application of the above criteria creates an inequity or hardship in any given case, the Agency may approve the use of other criteria as determined appropriate.

Decent, safe, and sanitary dwelling. The term *decent, safe, and sanitary dwelling* means a dwelling which meets applicable housing and occupancy codes. However, any of the following standards which are not met by an applicable code shall apply unless waived for good cause by the Federal agency funding the project. The dwelling shall:

(1) Be structurally sound, weathertight, and in good repair.

(2) Contain a safe electrical wiring system adequate for lighting and other devices.

(3) Contain a heating system capable of sustaining a healthful temperature (of approximately 70 degrees) for a displaced person, except in those areas where local climatic conditions do not require such a system.

(4) Be adequate in size with respect to the number of rooms and area of living space needed to accommodate the displaced person. There shall be a separate, well lighted and ventilated bathroom that provides privacy to the user and contains a sink, bathtub or shower stall, and a toilet, all in good working order and properly connected to appropriate sources of water and to a sewage drainage system. In the case of a housekeeping dwelling, there shall be a kitchen area that contains a fully usable sink, properly connected to potable hot and cold water and to a sewage drainage system, and adequate space and utility service connections for a stove and refrigerator.

(5) Contains unobstructed egress to safe, open space at ground level. If the replacement dwelling unit is on the second story or above, with access directly from or through a common corridor, the common corridor must have at least two means of egress.

(6) For a displaced person who is handicapped, be free of any barriers which would preclude reasonable ingress, egress, or use of the dwelling by such displaced person.

Displaced person—(1) *General.* The term ''displaced person'' means, except as provided in paragraph (2) of this definition, any person who moves from the real property or moves his or her personal property from the real property: (This includes a person who occupies the real property prior to its acquisition, but who does not meet the length of occupancy requirements of the Uniform Act as described at §§24.401(a) and 24.402(a)):

(i) As a direct result of a written notice of intent to acquire, the initiation of negotiations for, or the acquisition of, such real property in whole or in part for a project.

(ii) As a direct result of rehabilitation or demolition for a project; or

(iii) As a direct result of a written notice of intent to acquire, or the acquisition, rehabilitation or demolition of, in whole or in part, other real property on which the person conducts a business or farm operation, for a project. However, eligibility for such person under this paragraph applies only for purposes of obtaining relocation assistance advisory services under

§ 24.205(c), and moving expenses under § 24.301, § 24.302 or § 24.303.

(2) *Persons not displaced.* The following is a nonexclusive listing of persons who do not qualify as displaced persons under this part:

(i) A person who moves before the initiation of negotiations (see also § 24.403(d)), unless the Agency determines that the person was displaced as a direct result of the program or project; or

(ii) A person who initially enters into occupancy of the property after the date of its acquisition for the project; or

(iii) A person who has occupied the property for the purpose of obtaining assistance under the Uniform Act;

(iv) A person who is not required to relocate permanently as a direct result of a project. Such determination shall be made by the Agency in accordance with any guidelines established by the Federal agency funding the project (see also appendix A of this part); or

(v) An owner-occupant who moves as a result of an acquisition as described at §§ 24.101(a) (1) and (2) , or as a result of the rehabilitation or demolition of the real property. (However, the displacement of a tenant as a direct result of any acquisition, rehabilitation or demolition for a Federal or federally-assisted project is subject to this part.); or

(vi) A person whom the Agency determines is not displaced as a direct result of a partial acquisition; or

(vii) A person who, after receiving a notice of relocation eligibility (described at § 24.203(b)), is notified in writing that he or she will not be displaced for a project. Such notice shall not be issued unless the person has not moved and the Agency agrees to reimburse the person for any expenses incurred to satisfy any binding contractual relocation obligations entered into after the effective date of the notice of relocation eligibility; or

(viii) An owner-occupant who voluntarily conveys his or her property, as described at § 24.101(a) (1) and (2), after being informed in writing that if a mutually satisfactory agreement on terms of the conveyance cannot be reached, the Agency will not acquire the property. In such cases, however, any resulting displacement of a tenant is subject to the regulations in this part; or

(ix) A person who retains the right of use and occupancy of the real property for life following its acquisition by the Agency; or

(x) An owner who retains the right of use and occupancy of the real property for a fixed term after its acquisition by the Department of the Interior under Public Law 93–477 or Public Law 93–303, except that such owner remains a displaced person for purposes of subpart D of this part; or

(xi) A person who is determined to be in unlawful occupancy prior to the initiation of negotiations (see paragraph (y) of this section), or a person who has been evicted for cause, under applicable law, as provided for in § 24.206.

(xii) A person who is not lawfully present in the United States and who has been determined to be ineligible for relocation benefits in accordance with § 24.208.

Dwelling. The term *dwelling* means the place of permanent or customary and usual residence of a person, according to local custom or law, including a single family house; a single family unit in a two-family, multi-family, or multi-purpose property; a unit of a condominium or cooperative housing project; a non-housekeeping unit; a mobile home; or any other residential unit.

Farm operation. The term *farm operation* means any activity conducted solely or primarily for the production of one or more agricultural products or commodities, including timber, for sale or home use, and customarily producing such products or commodities in sufficient quantity to be capable of contributing materially to the operator's support.

Federal financial assistance. The term *Federal financial assistance* means a grant, loan, or contribution provided by the United States, except any Federal guarantee or insurance and any interest reduction payment to an individual in connection with the purchase and occupancy of a residence by that individual.

Initiation of negotiations. Unless a different action is specified in applicable Federal program regulations, the term

initiation of negotiations means the following:

(1) Whenever the displacement results from the acquisition of the real property by a Federal agency or State agency, the *initiation of negotiations* means the delivery of the initial written offer of just compensation by the Agency to the owner or the owner's representative to purchase the real property for the project. However, if the Federal agency or State agency issues a notice of its intent to acquire the real property, and a person moves after that notice, but before de1ivery to the initial written purchase offer, the *initiation of negotiations* means the actual move of the person from the property.

(2) Whenever the displacement is caused by rehabilitation, demolition or privately undertaken acquisition of the real property (and there is no related acquisition by a Federal agency or a State agency), the *initiation of negotiations* means the notice to the person that he or she will be displaced by the project or, if there is no notice, the actual move of the person from the property.

(3) In the case of a permanent relocation to protect the public health and welfare, under the Comprehensive Environmental Response Compensation and Liability Act of 1980 (Pub. L. 96–510, or *Superfund*) the *initiation of negotiations* means the formal announcement of such relocation or the Federal or federally-coordinated health advisory where the Federal Government later decides to conduct a permanent relocation.

Lead agency. The term *lead agency* means the Department of Transportation acting through the Federal Highway Administration.

Mortgage. The term *mortgage* means such classes of liens as are commonly given to secure advances on, or the unpaid purchase price of, real property, under the laws of the State in which the real property is located, together with the credit instruments, if any, secured thereby.

Nonprofit organization. The term *nonprofit organization* means an organization that is incorporated under the applicable laws of a State as a non-profit organization, and exempt from paying Federal income taxes under section 501 of the Internal Revenue Code (26 U.S.C. 501).

Notice of intent to acquire or notice of eligibility for relocation assistance. Written notice furnished to a person to be displaced, including those to be displaced by rehabilitation or demolition activities from property acquired prior to the commitment of Federal financial assistance to the activity, that establishes eligibility for relocation benefits prior to the initiation of negotiation and/or prior to the commitment of Federal financial assistance.

Owner of a dwelling. A person is considered to have met the requirement to own a dwelling if the person purchases or holds any of the following interests in real property;

(1) Fee title, a life estate, a land contract, a 99-year lease, or a lease including any options for extension with at least 50 years to run from the date of acquisition; or

(2) An interest in a cooperative housing project which includes the right to occupy a dwelling; or

(3) A contract to purchase any of the interests or estates described in paragraphs (p) (1) or (2) of this section, or

(4) Any other interest, including a partial interest, which in the judgment of the Agency warrants consideration as ownership.

Person. The term *person* means any individual, family, partnership, corporation, or association.

Program or project. The phrase *program or project* means any activity or series of activities undertaken by a Federal agency or with Federal financial assistance received or anticipated in any phase of an undertaking in accordance with the Federal funding agency guidelines.

Salvage value. The term *salvage value* means the probable sale price of an item, if offered for sale on the condition that it will be removed from the property at the buyer's expense, allowing a reasonable period of time to find a person buying with knowledge of the uses and purposes for which it is adaptable and capable of being used, including separate use of serviceable components and scrap when there is no reasonable prospect of sale except on that basis.

Small business. A business having not more than 500 employees working at the site being acquired or displaced by a program or project, which site is the location of economic activity. Sites occupied solely by outdoor advertising signs, displays, or devices do not qualify as a business for purposes of § 24.304.

State. Any of the several States of the United States or the District of Columbia, the Commonwealth of Puerto Rico, any territory or possession of the United States, or a political subdivision of any of these jurisdictions.

Tenant. The term *tenant* means a person who has the temporary use and occupancy of real property owned by another.

Uneconomic remnant. The term *uneconomic remnant* means a parcel of real property in which the owner is left with an interest after the partial acquisition of the owner's property, and which the acquiring agency has determined has little or no value or utility to the owner.

Uniform Act. The term *Uniform Act* means the Uniform Relocation Assistance and Real Property Acquisition Policy Act of 1970 (84 Stat. 1894; 42 U.S.C. 4601 *et seq.*; Pub. L. 91–646), and amendments thereto.

Unlawful occupancy. A person is considered to be in unlawful occupancy if the person has been ordered to move by a court of competent jurisdiction prior to the initiation of negotiations or is determined by the Agency to be a squatter who is occupying the real property without the permission of the owner and otherwise has no legal right to occupy the property under State law. A displacing agency may, at its discretion, consider such a squatter to be in lawful occupancy.

Utility costs. The term *utility costs* means expenses for heat, lights, water and sewer.

Utility facility. The term *utility facility* means any electric, gas, water, steampower, or materials transmission or distribution system; any transportation system; any communications system, including cable television; and any fixtures, equipment, or other property associated with the operation, maintenance, or repair of any such system. A utility facility may be publicly, privately, or cooperatively owned.

Utility relocation. The term *utility relocation* means the adjustment of a utility facility required by the program or project undertaken by the displacing agency. It includes removing and reinstalling the facility, including necessary temporary facilities; acquiring necessary right-of-way on new location; moving, rearranging or changing the type of existing facilities; and taking any necessary safety and protective measures. It shall also mean constructing a replacement facility that has the functional equivalency of the existing facility and is necessary for the continued operation of the utility service, the project economy, or sequence of project construction.

[54 FR 8928, Mar. 2, 1989; 54 FR 24712, June 9, 1989; 58 FR 26072, Apr. 30, 1993; 64 FR 7131, Feb. 12, 1999]

§ 24.3 No duplication of payments.

No person shall receive any payment under this part if that person receives a payment under Federal, State, or local law which is determined by the Agency to have the same purpose and effect as such payment under this part. (See appendix A of this part, § 24.3.)

§ 24.4 Assurances, monitoring and corrective action.

(a) *Assurances*—(1) Before a Federal agency may approve any grant to, or contract, or agreement with, a State agency under which Federal financial assistance will be made available for a project which results in real property acquisition or displacement that is subject to the Uniform Act, the State agency must provide appropriate assurances that it will comply with the Uniform Act and this part. A displacing agency's assurances shall be in accordance with section 210 of the Uniform Act. An acquiring agency's assurances shall be in accordance with section 305 of the Uniform Act and must contain specific reference to any State law which the Agency believes provides an exception to section 301 or 302 of the Uniform Act. If, in the judgment of the Federal agency, Uniform Act compliance will be served, a State agency may provide these assurances at one time to cover all subsequent federally-assisted programs or projects. An

Agency which both acquires real property and displaces persons may combine its section 210 and section 305 assurances in one document.

(2) If a Federal agency or State agency provides Federal financial assistance to a ''person'' causing displacement, such Federal or State agency is responsible for ensuring compliance with the requirements of this part, notwithstanding the person's contractual obligation to the grantee to comply.

(3) As an alternative to the assurance requirement described in paragraph (a)(1) of this section, a Federal agency may provide Federal financial assistance to a State agency after it has accepted a certification by such State agency in accordance with the requirements in subpart G of this part.

(b) *Monitoring and corrective action.* The Federal agency will monitor compliance with this part, and the State agency shall take whatever corrective action is necessary to comply with the Uniform Act and this part. The Federal agency may also apply sanctions in accordance with applicable program regulations. (Also see § 24.603, subpart G.)

(c) *Prevention of fraud, waste, and mismanagement.* The Agency shall take appropriate measures to carry out this part in a manner that minimizes fraud, waste, and mismanagement.

§ 24.5 Manner of notices.

Each notice which the Agency is required to provide to a property owner or occupant under this part, except the notice described at § 24.102(b), shall be personally served or sent by certified or registered first-class mail, return receipt requested, and documented in Agency files. Each notice shall be written in plain, understandable language. Persons who are unable to read and understand the notice must be provided with appropriate translation and counseling. Each notice shall indicate the name and telephone number of a person who may be contacted for answers to questions or other needed help.

§ 24.6 Administration of jointly-funded projects.

Whenever two or more Federal agencies provide financial assistance to an Agency or Agencies, other than a Federal agency, to carry out functionally or geographically related activities which will result in the acquisition of property or the displacement of a person, the Federal agencies may by agreement designate one such agency as the cognizant Federal agency. In the unlikely event that agreement among the Agencies cannot be reached as to which agency shall be the cognizant Federal agency, then the lead agency shall designate one of such agencies to assume the cognizant role. At a minimum, the agreement shall set forth the federally assisted activities which are subject to its terms and cite any policies and procedures, in addition to this part, that are applicable to the activities under the agreement. Under the agreement, the cognizant Federal agency shall assure that the project is in compliance with the provisions of the Uniform Act and this part. All federally assisted activities under the agreement shall be deemed a project for the purposes of this part.

§ 24.7 Federal agency waiver of regulations.

The Federal agency funding the project may waive any requirement in this part not required by law if it determines that the waiver does not reduce any assistance or protection provided to an owner or displaced person under this part. Any request for a waiver shall be justified on a case-by-case basis.

§ 24.8 Compliance with other laws and regulations.

The implementation of this part must be in compliance with other applicable Federal laws and implementing regulations, including, but not limited to, the following:

(a) Section I of the Civil Rights Act of 1866 (42 U.S.C. 1982 *et seq.*).

(b) Title VI of the Civil Rights Act of 1964 (42 U.S.C. 2000d *et seq.*).

(c) Title VIII of the Civil Rights Act of 1968 (42 U.S.C. 3601 *et seq.*), as amended.

(d) The National Environmental Policy Act of 1969 (42 U.S.C. 4321 *et seq.*).

(e) Section 504 of the Rehabilitation Act of 1973 (29 U.S.C. 790 *et seq.*).

(f) The Flood Disaster Protection Act of 1973 (Pub. L. 93–234).

(g) The Age Discrimination Act of 1975 (42 U.S.C. 6101 *et seq.*).

(h) Executive Order 11063—Equal Opportunity and Housing, as amended by Executive Order l2259.

(i) Executive Order 11246—Equal Employment Opportunity.

(j) Executive Order 11625—Minority Business Enterprise.

(k) Executive Orders 11988, Floodplain Management, and 11990, Protection of Wetlands.

(l) Executive Order 12250—Leadership and Coordination of Non-Discrimination Laws.

(m) Executive Order 12259—Leadership and Coordination of Fair Housing in Federal Programs.

(n) Executive Order 12630—Governmental Actions and Interference with Constitutionally Protected Property Rights.

§ 24.9 Recordkeeping and reports.

(a) *Records.* The Agency shall maintain adequate records of its acquisition and displacement activities in sufficient detail to demonstrate compliance with this part. These records shall be retained for at least 3 years after each owner of a property and each person displaced from the property receives the final payment to which he or she is entitled under this part, or in accordance with the applicable regulations of the Federal funding agency, whichever is later.

(b) *Confidentiality of records.* Records maintained by an Agency in accordance with this part are confidential regarding their use as public information, unless applicable law provides otherwise.

(c) *Reports.* The Agency shall submit a report of its real property acquisition and displacement activities under this part if required by the Federal agency funding the project. A report will not be required more frequently than every 3 years, or as the Uniform Act provides, unless the Federal funding agency shows good cause. The report shall be prepared and submitted in the format contained in appendix B of this part.

§ 24.10 Appeals.

(a) *General.* The Agency shall promptly review appeals in accordance with the requirements of applicable law and this part.

(b) *Actions which may be appealed.* Any aggrieved person may file a written appeal with the Agency in any case in which the person believes that the Agency has failed to properly consider the person's application for assistance under this part. Such assistance may include, but is not limited to, the person's eligibility for, or the amount of, a payment required under § 24.106 or § 24.107, or a relocation payment required under this part. The Agency shall consider a written appeal regardless of form.

(c) *Time limit for initiating appeal.* The Agency may set a reasonable time limit for a person to file an appeal. The time limit shall not be less than 60 days after the person receives written notification of the Agency's determination on the person's claim.

(d) *Right to representation.* A person has a right to be represented by legal counsel or other representative in connection with his or her appeal, but solely at the person's own expense.

(e) *Review of files by person making appeal.* The Agency shall permit a person to inspect and copy all materials pertinent to his or her appeal, except materials which are classified as confidential by the Agency. The Agency may, however, impose reasonable conditions on the person's right to inspect, consistent with applicable laws.

(f) *Scope of review of appeal.* In deciding an appeal, the Agency shall consider all pertinent justification and other material submitted by the person, and all other available information that is needed to ensure a fair and full review of the appeal.

(g) *Determination and notification after appeal.* Promptly after receipt of all information submitted by a person in support of an appeal, the Agency shall make a written determination on the appeal, including an explanation of the basis on which the decision was made, and furnish the person a copy. If the full relief requested is not granted, the Agency shall advise the person of his or her right to seek judicial review.

(h) *Agency official to review appeal.* The Agency official conducting the review of the appeal shall be either the

head of the Agency or his or her authorized designee. However, the official shall not have been directly involved in the action appealed.

Subpart B—Real Property Acquisition

§ 24.101 Applicability of acquisition requirements.

(a) *General.* The requirements of this subpart apply to any acquisition of real property for a Federal program or project, and to programs and projects where there is Federal financial assistance in any part of project costs except for:

(1) Voluntary transactions that meet all of the following conditions:

(i) No specific site or property needs to be acquired, although the Agency may limit its search for alternative sites to a general geographic area. Where an Agency wishes to purchase more than one site within a geographic area on this basis, all owners are to be treated similarly.

(ii) The property to be acquired is not part of an intended, planned, or designated project area where all or substantially all of the property within the area is to be acquired within specific time limits.

(iii) The Agency will not acquire the property in the event negotiations fail to result in an amicable agreement, and the owner is so informed in writing.

(iv) The Agency will inform the owner of what it believes to be the fair market value of the property.

(2) Acquisitions for programs or projects undertaken by an Agency or person that receives Federal financial assistance but does not have authority to acquire property by eminent domain, provided that such Agency or person shall:

(i) Prior to making an offer for the property, clearly advise the owner that it is unable to acquire the property in the event negotiations fail to result in an amicable agreement; and

(ii) Inform the owner of what it believes to be fair market value of the property.

(3) The acquisition of real property from a Federal agency, State, or State agency, if the Agency desiring to make the purchase does not have authority to acquire the property through condemnation.

(4) The acquisition of real property by a cooperative from a person who, as a condition of membership in the cooperative, has agreed to provide without charge any real property that is needed by the cooperative.

(5) Acquisition for a program or project which is undertaken by, or receives Federal financial assistance from, the Tennessee Valley Authority or the Rural Electrification Administration.

(b) *Less-than-full-fee interest in real property.* In addition to fee simple title, the provisions of this subpart apply when acquiring fee title subject to retention of a life estate or a life use; to acquisition by leasing where the lease term, including option(s) for extension, is 50 years or more; and to the acquisition of permanent easements. (See appendix A of this part, § 24.101(b).)

(c) *Federally-assisted projects.* For projects receiving Federal financial assistance, the provisions of §§ 24.102, 24.103, 24.104, and 24.105 apply to the greatest extent practicable under State law. (See § 24.4(a).)

[54 FR 8928, Mar. 2, 1989; 54 FR 24712, June 9, 1989; 58 FR 26072, Apr. 30, 1993]

§ 24.102 Basic acquisition policies.

(a) *Expeditious acquisition.* The Agency shall make every reasonable effort to acquire the real property expeditiously by negotiation.

(b) *Notice to owner.* As soon as feasible, the owner shall be notified of the Agency's interest in acquiring the real property and the basic protections, including the agency's obligation to secure an appraisal, provided to the owner by law and this part. (See also § 24.203.)

(c) *Appraisal, waiver thereof, and invitation to owner.* (1) Before the initiation of negotiations the real property to be acquired shall be appraised, except as provided in § 24.102(c)(2), and the owner, or the owner's designated representative, shall be given an opportunity to accompany the appraiser during the appraiser's inspection of the property.

(2) An appraisal is not required if the owner is donating the property and releases the Agency from this obligation,

or the Agency determines that an appraisal is unnecessary because the valuation problem is uncomplicated and the fair market value is estimated at $2,500 or less, based on a review of available data.

(d) *Establishment and offer of just compensation.* Before the initiation of negotiations, the Agency shall establish an amount which it believes is just compensation for the real property. The amount shall not be less than the approved appraisal of the fair market value of the property, taking into account the value of allowable damages or benefits to any remaining property. (See also § 24.104.) Promptly thereafter, the Agency shall make a written offer to the owner to acquire the property for the full amount believed to be just compensation.

(e) *Summary statement.* Along with the initial written purchase offer, the owner shall be given a written statement of the basis for the offer of just compensation, which shall include:

(1) A statement of the amount offered as just compensation. In the case of a partial acquisition, the compensation for the real property to be acquired and the compensation for damages, if any, to the remaining real property shall be separately stated.

(2) A description and location identification of the real property and the interest in the real property to be acquired.

(3) An identification of the buildings, structures, and other improvements (including removable building equipment and trade fixtures) which are considered to be part of the real property for which the offer of just compensation is made. Where appropriate, the statement shall identify any separately held ownership interest in the property, e.g., a tenant-owned improvement, and indicate that such interest is not covered by the offer.

(f) *Basic negotiation procedures.* The Agency shall make reasonable efforts to contact the owner or the owner's representative and discuss its offer to purchase the property, including the basis for the offer of just compensation; and, explain its acquisition policies and procedures, including its payment of incidental expenses in accordance with § 24.106. The owner shall be given reasonable opportunity to consider the offer and present material which the owner believes is relevant to determining the value of the property and to suggest modification in the proposed terms and conditions of the purchase. The Agency shall consider the owner's presentation.

(g) *Updating offer of just compensation.* If the information presented by the owner, or a material change in the character or condition of the property, indicates the need for new appraisal information, or if a significant delay has occurred since the time of the appraisal(s) of the property, the Agency shall have the appraisal(s) updated or obtain a new appraisal(s). If the latest appraisal information indicates that a change in the purchase offer is warranted, the Agency shall promptly reestablish just compensation and offer that amount to the owner in writing.

(h) *Coercive action.* The Agency shall not advance the time of condemnation, or defer negotiations or condemnation or the deposit of funds with the court, or take any other coercive action in order to induce an agreement on the price to be paid for the property.

(i) *Administrative settlement.* The purchase price for the property may exceed the amount offered as just compensation when reasonable efforts to negotiate an agreement at that amount have failed and an authorized Agency official approves such administrative settlement as being reasonable, prudent, and in the public interest. When Federal funds pay for or participate in acquisition costs, a written justification shall be prepared which indicates that available information (e.g., appraisals, recent court awards, estimated trial costs, or valuation problems) supports such a settlement.

(j) *Payment before taking possession.* Before requiring the owner to surrender possession of the real property, the Agency shall pay the agreed purchase price to the owner, or in the case of a condemnation, deposit with the court, for the benefit of the owner, an amount not less than the Agency's approved appraisal of the fair market value of such property, or the court award of compensation in the condemnation proceeding for the property. In exceptional circumstances, with the

prior approval of the owner, the Agency may obtain a right-of-entry for construction purposes before making payment available to an owner.

(k) *Uneconomic remnant.* If the acquisition of only a portion of a property would leave the owner with an uneconomic remnant, the Agency shall offer to acquire the uneconomic remnant along with the portion of the property needed for the project. (See § 24.2.)

(l) *Inverse condemnation.* If the Agency intends to acquire any interest in real property by exercise of the power of eminent domain, it shall institute formal condemnation proceedings and not intentionally make it necessary for the owner to institute legal proceedings to prove the fact of the taking of the real property.

(m) *Fair rental.* If the Agency permits a former owner or tenant to occupy the real property after acquisition for a short term or a period subject to termination by the Agency on short notice, the rent shall not exceed the fair market rent for such occupancy.

[54 FR 8928, Mar. 2, 1989, as amended at 64 FR 7132, Feb. 12, 1999]

§ 24.103 Criteria for appraisals.

(a) *Standards of appraisal.* The format and level of documentation for an appraisal depend on the complexity of the appraisal problem. The Agency shall develop minimum standards for appraisals consistent with established and commonly accepted appraisal practice for those acquisitions which, by virtue of their low value or simplicity, do not require the in-depth analysis and presentation necessary in a detailed appraisal. A detailed appraisal shall be prepared for all other acquisitions. A detailed appraisal shall reflect nationally recognized appraisal standards, including, to the extent appropriate, the Uniform Appraisal Standards for Federal Land Acquisition. An appraisal must contain sufficient documentation, including valuation data and the appraiser's analysis of that data, to support his or her opinion of value. At a minimum, a detailed appraisal shall contain the following items:

(1) The purpose and/or the function of the appraisal, a definition of the estate being appraised, and a statement of the assumptions and limiting conditions affecting the appraisal.

(2) An adequate description of the physical characteristics of the property being appraised (and, in the case of a partial acquisition, an adequate description of the remaining property), a statement of the known and observed encumbrances, if any, title information, location, zoning, present use, an analysis of highest and best use, and at least a 5-year sales history of the property.

(3) All relevant and reliable approaches to value consistent with commonly accepted professional appraisal practices. When sufficient market sales data are available to reliably support the fair market value for the specific appraisal problem encountered, the Agency, at its discretion, may require only the market approach. If more than one approach is utilized, there shall be an analysis and reconciliation of approaches to value that are sufficient to support the appraiser's opinion of value.

(4) A description of comparable sales, including a description of all relevant physical, legal, and economic factors such as parties to the transaction, source and method of financing, and verification by a party involved in the transaction.

(5) A statement of the value of the real property to be acquired and, for a partial acquisition, a statement of the value of the damages and benefits, if any, to the remaining real property, where appropriate.

(6) The effective date of valuation, date of appraisal, signature, and certification of the appraiser.

(b) *Influence of the project on just compensation.* To the extent permitted by applicable law, the appraiser shall disregard any decrease or increase in the fair market value of the real property caused by the project for which the property is to be acquired, or by the likelihood that the property would be acquired for the project, other than that due to physical deterioration within the reasonable control of the owner.

(c) *Owner retention of improvements.* If the owner of a real property improvement is permitted to retain it for removal from the project site, the

amount to be offered for the interest in the real property to be acquired shall be not less than the difference between the amount determined to be just compensation for the owner's entire interest in the real property and the salvage value (defined at § 24.2) of the retained improvement.

(d) *Qualifications of appraisers.* (1) The Agency shall establish criteria for determining the minimum qualifications of appraisers. Appraiser qualifications shall be consistent with the level of difficulty of the appraisal assignment. The Agency shall review the experience, education, training, and other qualifications of appraisers, including review appraisers, and utilize only those determined to be qualified.

(2) If the appraisal assignment requires the preparation of a detailed appraisal pursuant to § 24.103(a), and the Agency uses a contract (fee) appraiser to perform the appraisal, such appraiser shall be certified in accordance with title XI of the Financial Institutions Reform, Recovery, and Enforcement Act of 1989 (FIRREA) (12 U.S.C. 3331 *et seq*).

(e) *Conflict of interest.* No appraiser or review appraiser shall have any interest, direct or indirect, in the real property being appraised for the Agency that would in any way conflict with the preparation or review of the appraisal. Compensation for making an appraisal shall not be based on the amount of the valuation. No appraiser shall act as a negotiator for real property which that person has appraised, except that the Agency may permit the same person to both appraise and negotiate an acquisition where the value of the acquisition is $2,500, or less.

[54 FR 8928, Mar. 2, 1989, as amended at 57 FR 33266, July 27, 1992; 57 FR 53295, Nov. 9, 1992; 64 FR 7132, Feb. 12, 1999]

§ 24.104 Review of appraisals.

The Agency shall have an appraisal review process and, at a minimum:

(a) A qualified reviewing appraiser shall examine all appraisals to assure that they meet applicable appraisal requirements and shall, prior to acceptance, seek necessary corrections or revisions.

(b) If the reviewing appraiser is unable to approve or recommend approval of an appraisal as an adequate basis for the establishment of the offer of just compensation, and it is determined that it is not practical to obtain an additional appraisal, the reviewing appraiser may develop appraisal documentation in accordance with § 24.103 to support an approved or recommended value.

(c) The review appraiser's certification of the recommended or approved value of the property shall be set forth in a signed statement which identifies the appraisal reports reviewed and explains the basis for such recommendation or approval. Any damages or benefits to any remaining property shall also be identified in the statement.

§ 24.105 Acquisition of tenant-owned improvements.

(a) *Acquisition of improvements.* When acquiring any interest in real property, the Agency shall offer to acquire at least an equal interest in all buildings, structures, or other improvements located upon the real property to be acquired, which it requires to be removed or which it determines will be adversely affected by the use to which such real property will be put. This shall include any improvement of a tenant-owner who has the right or obligation to remove the improvement at the expiration of the lease term.

(b) *Improvements considered to be real property.* Any building, structure, or other improvement, which would be considered to be real property if owned by the owner of the real property on which it is located, shall be considered to be real property for purposes of this subpart.

(c) *Appraisal and establishment of just compensation for tenant-owned improvements.* Just compensation for a tenant-owned improvement is the amount which the improvement contributes to the fair market value of the whole property or its salvage value, whichever is greater. (Salvage value is defined at § 24.2.)

(d) *Special conditions.* No payment shall be made to a tenant-owner for any real property improvement unless:

(1) The tenant-owner, in consideration for the payment, assigns, transfers, and releases to the Agency all of

the tenant-owner's right, title, and interest in the improvement; and

(2) The owner of the real property on which the improvement is located disclaims all interest in the improvement; and

(3) The payment does not result in the duplication of any compensation otherwise authorized by law.

(e) *Alternative compensation.* Nothing in this subpart shall be construed to deprive the tenant-owner of any right to reject payment under this subpart and to obtain payment for such property interests in accordance with other applicable law.

[54 FR 8928, Mar. 2, 1989; 54 FR 24712, June 9, 1989, as amended at 64 FR 7132, Feb. 12, 1999]

§ 24.106 Expenses incidental to transfer of title to the Agency.

(a) The owner of the real property shall be reimbursed for all reasonable expenses the owner necessarily incurred for:

(1) Recording fees, transfer taxes, documentary stamps, evidence of title, boundary surveys, legal descriptions of the real property, and similar expenses incidental to conveying the real property to the Agency. However, the Agency is not required to pay costs solely required to perfect the owner's title to the real property; and

(2) Penalty costs and other charges for prepayment of any preexisting recorded mortgage entered into in good faith encumbering the real property; and

(3) The pro rata portion of any prepaid real property taxes which are allocable to the period after the Agency obtains title to the property or effective possession of it, whichever is earlier.

(b) Whenever feasible, the Agency shall pay these costs directly so that the owner will not have to pay such costs and then seek reimbursement from the Agency.

§ 24.107 Certain litigation expenses.

The owner of the real property shall be reimbursed for any reasonable expenses, including reasonable attorney, appraisal, and engineering fees, which the owner actually incurred because of a condemnation proceeding, if:

(a) The final judgment of the court is that the Agency cannot acquire the real property by condemnation; or

(b) The condemnation proceeding is abandoned by the Agency other than under an agreed-upon settlement; or

(c) The court having jurisdiction renders a judgment in favor of the owner in an inverse condemnation proceeding or the Agency effects a settlement of such proceeding.

§ 24.108 Donations.

An owner whose real property is being acquired may, after being fully informed by the Agency of the right to receive just compensation for such property, donate such property or any part thereof, any interest therein, or any compensation paid therefor, to the Agency as such owner shall determine. The Agency is responsible for assuring that an appraisal of the real property is obtained unless the owner releases the Agency from such obligation, except as provided in § 24.102(c)(2).

Subpart C—General Relocation Requirements

§ 24.201 Purpose.

This subpart prescribes general requirements governing the provision of relocation payments and other relocation assistance in this part.

§ 24.202 Applicability.

These requirements apply to the relocation of any displaced person as defined at § 24.2.

[54 FR 8928, Mar. 2, 1989, as amended at 64 FR 7132, Feb. 12, 1999]

§ 24.203 Relocation notices.

(a) *General information notice.* As soon as feasible, a person scheduled to be displaced shall be furnished with a general written description of the displacing agency's relocation program which does at least the following:

(1) Informs the person that he or she may be displaced for the project and generally describes the relocation payment(s) for which the person may be eligible, the basic conditions of eligibility, and the procedures for obtaining the payment(s).

(2) Informs the person that he or she will be given reasonable relocation advisory services, including referrals to replacement properties, help in filing payment claims, and other necessary assistance to help the person successfully relocate.

(3) Informs the person that he or she will not be required to move without at least 90 days' advance written notice (see paragraph (c) of this section), and informs any person to be displaced from a dwelling that he or she cannot be required to move permanently unless at least one comparable replacement dwelling has been made available.

(4) Informs the person that any person who is an alien not lawfully present in the United States is ineligible for relocation advisory services and relocation payments, unless such ineligibility would result in exceptional and extremely unusual hardship to a qualifying spouse, parent, or child, as defined in § 24.208(i).

(5) Describes the person's right to appeal the Agency's determination as to a person's application for assistance for which a person may be eligible under this part.

(b) *Notice of relocation eligibility*. Eligibility for relocation assistance shall begin on the date of initiation of negotiations (defined in § 24.2) for the occupied property. When this occurs, the Agency shall promptly notify all occupants in writing of their eligibility for applicable relocation assistance.

(c) *Ninety-day notice*—(1) *General.* No lawful occupant shall be required to move unless he or she has received at least 90 days advance written notice of the earliest date by which he or she may be required to move.

(2) *Timing of notice.* The displacing agency may issue the notice 90 days before it expects the person to be displaced or earlier.

(3) *Content of notice.* The 90-day notice shall either state a specific date as the earliest date by which the occupant may be required to move, or state that the occupant will receive a further notice indicating, at least 30 days in advance, the specific date by which he or she must move. If the 90-day notice is issued before a comparable replacement dwelling is made available, the notice must state clearly that the occupant will not have to move earlier than 90 days after such a dwelling is made available. (See § 24.204(a).)

(4) *Urgent need.* In unusual circumstances, an occupant may be required to vacate the property on less than 90 days advance written notice if the displacing agency determines that a 90-day notice is impracticable, such as when the person's continued occupancy of the property would constitute a substantial danger to health or safety. A copy of the Agency's determination shall be included in the applicable case file.

[54 FR 8928, Mar. 2, 1989, as amended at 64 FR 7132, Feb. 12, 1999]

§ 24.204 Availability of comparable replacement dwelling before displacement.

(a) *General.* No person to be displaced shall be required to move from his or her dwelling unless at least one comparable replacement dwelling (defined at § 24.2) has been made available to the person. Where possible, three or more comparable replacement dwellings shall be made available. A comparable replacement dwelling will be considered to have been made available to a person, if:

(1) The person is informed of its location; and

(2) The person has sufficient time to negotiate and enter into a purchase agreement or lease for the property; and

(3) Subject to reasonable safeguards, the person is assured of receiving the relocation assistance and acquisition payment to which the person is entitled in sufficient time to complete the purchase or lease of the property.

(b) *Circumstances permitting waiver.* The Federal agency funding the project may grant a waiver of the policy in paragraph (a) of this section in any case where it is demonstrated that a person must move because of:

(1) A major disaster as defined in section 102(c) of the Disaster Relief Act of 1974 (42 U.S.C. 5121); or

(2) A presidentially declared national emergency; or

(3) Another emergency which requires immediate vacation of the real

property, such as when continued occupancy of the displacement dwelling constitutes a substantial danger to the health or safety of the occupants or the public.

(c) *Basic conditions of emergency move.* Whenever a person is required to relocate for a temporary period because of an emergency as described in paragraph (b) of this section, the Agency shall:

(1) Take whatever steps are necessary to assure that the person is temporarily relocated to a decent, safe, and sanitary dwelling; and

(2) Pay the actual reasonable out-of-pocket moving expenses and any reasonable increase in rent and utility costs incurred in connection with the temporary relocation; and

(3) Make available to the displaced person as soon as feasible, at least one comparable replacement dwelling. (For purposes of filing a claim and meeting the eligibility requirements for a relocation payment, the date of displacement is the date the person moves from the temporarily-occupied dwelling.)

[54 FR 8928, Mar. 2, 1989, as amended at 64 FR 7132, Feb. 12, 1999]

§ 24.205 Relocation planning, advisory services, and coordination.

(a) *Relocation planning.* During the early stages of development, Federal and Federal-aid programs or projects shall be planned in such a manner that the problems associated with the displacement of individuals, families, businesses, farms, and nonprofit organizations are recognized and solutions are developed to minimize the adverse impacts of displacement. Such planning, where appropriate, shall precede any action by an Agency which will cause displacement, and should be scoped to the complexity and nature of the anticipated displacing activity including an evaluation of program resources available to carry out timely and orderly relocations. Planning may involve a relocation survey or study which may include the following:

(1) An estimate of the number of households to be displaced including information such as owner/tenant status, estimated value and rental rates of properties to be acquired, family characteristics, and special consideration of the impacts on minorities, the elderly, large families, and the handicapped when applicable.

(2) An estimate of the number of comparable replacement dwellings in the area (including price ranges and rental rates) that are expected to be available to fulfill the needs of those households displaced. When an adequate supply of comparable housing is not expected to be available, consideration of housing of last resort actions should be instituted.

(3) An estimate of the number, type and size of the businesses, farms, and nonprofit organizations to be displaced and the approximate number of employees that may be affected.

(4) Consideration of any special relocation advisory services that may be necessary from the displacing agency and other cooperating agencies.

(b) *Loans for planning and preliminary expenses.* In the event that an Agency elects to consider using the duplicative provision in section 215 of the Uniform Act which permits the use of project funds for loans to cover planning and other preliminary expenses for the development of additional housing, the lead agency will establish criteria and procedures for such use upon the request of the Federal agency funding the program or project.

(c) *Relocation assistance advisory services*—(1) *General.* The Agency shall carry out a relocation assistance advisory program which satisfies the requirements of title VI of the Civil Rights Act of 1964 (42 U.S.C. 2000d *et seq.*), title VIII of the Civil Rights Act of 1968 (42 U.S.C. 3601 *et seq.*), and Executive Order 11063 (27 FR 11527, November 24, 1962), and offers the services described in paragraph (c)(2) of this section. If the Agency determines that a person occupying property adjacent to the real property acquired for the project is caused substantial economic injury because of such acquisition, it may offer advisory services to such person.

(2) *Services to be provided.* The advisory program shall include such measures, facilities, and services as may be necessary or appropriate in order to:

(i) Determine the relocation needs and preferences of each person to be displaced and explain the relocation

payments and other assistance for which the person may be eligible, the related eligibility requirements, and the procedures for obtaining such assistance. This shall include a personal interview with each person.

(ii) Provide current and continuing information on the availability, purchase prices, and rental costs of comparable replacement dwellings, and explain that the person cannot be required to move unless at least one comparable replacement dwelling is made available as set forth in § 24.204(a).

(A) As soon as feasible, the Agency shall inform the person in writing of the specific comparable replacement dwelling and the price or rent used for establishing the upper limit of the replacement housing payment (see § 24.403 (a) and (b)) and the basis for the determination, so that the person is aware of the maximum replacement housing payment for which he or she may qualify.

(B) Where feasible, housing shall be inspected prior to being made available to assure that it meets applicable standards. (See § 24.2.) If such an inspection is not made, the person to be displaced shall be notified that a replacement housing payment may not be made unless the replacement dwelling is subsequently inspected and determined to be decent, safe, and sanitary.

(C) Whenever possible, minority persons shall be given reasonable opportunities to relocate to decent, safe, and sanitary replacement dwellings, not located in an area of minority concentration, that are within their financial means. This policy, however, does not require an Agency to provide a person a larger payment than is necessary to enable a person to relocate to a comparable replacement dwelling.

(D) All persons, especially the elderly and handicapped, shall be offered transportation to inspect housing to which they are referred.

(iii) Provide current and continuing information on the availability, purchase prices, and rental costs of suitable commercial and farm properties and locations. Assist any person displaced from a business or farm operation to obtain and become established in a suitable replacement location.

(iv) Minimize hardships to persons in adjusting to relocation by providing counseling, advice as to other sources of assistance that may be available, and such other help as may be appropriate.

(v) Supply persons to be displaced with appropriate information concerning Federal and State housing programs, disaster loan and other programs administered by the Small Business Administration, and other Federal and State programs offering assistance to displaced persons, and technical help to persons applying for such assistance.

(vi) Any person who occupies property acquired by an Agency, when such occupancy began subsequent to the acquisition of the property, and the occupancy is permitted by a short term rental agreement or an agreement subject to termination when the property is needed for a program or project, shall be eligible for advisory services, as determined by the Agency.

(d) *Coordination of relocation activities.* Relocation activities shall be coordinated with project work and other displacement-causing activities to ensure that, to the extent feasible, persons displaced receive consistent treatment and the duplication of functions is minimized. (Also see § 24.6, subpart A.)

[54 FR 8928, Mar. 2, 1989, as amended at 64 FR 7132, Feb. 12, 1999]

§ 24.206 Eviction for cause.

Eviction for cause must conform to applicable state and local law. Any person who occupies the real property and is not in unlawful occupancy on the date of the initiation of negotiations, is presumed to be entitled to relocation payments and other assistance set forth in this part unless the Agency determines that:

(a) The person received an eviction notice prior to the initiation of negotiations and, as a result of that notice is later evicted; or

(b) The person is evicted after the initiation of negotiations for serious or repeated violation of material terms of the lease or occupancy agreement; and

(c) In either case the eviction was not undertaken for the purpose of evading the obligation to make available the payments and other assistance set forth in this part.

For purposes of determining eligibility for relocation payments, the date of displacement is the date the person moves, or if later, the date a comparable replacement dwelling is made available. This section applies only to persons who would otherwise have been displaced by the project.

§ 24.207 General requirements—claims for relocation payments.

(a) *Documentation.* Any claim for a relocation payment shall be supported by such documentation as may be reasonably required to support expenses incurred, such as bills, certified prices, appraisals, or other evidence of such expenses. A displaced person must be provided reasonable assistance necessary to complete and file any required claim for payment.

(b) *Expeditious payments.* The Agency shall review claims in an expeditious manner. The claimant shall be promptly notified as to any additional documentation that is required to support the claim. Payment for a claim shall be made as soon as feasible following receipt of sufficient documentation to support the claim.

(c) *Advance payments.* If a person demonstrates the need for an advance relocation payment in order to avoid or reduce a hardship, the Agency shall issue the payment, subject to such safeguards as are appropriate to ensure that the objective of the payment is accomplished.

(d) *Time for filing*—(1) All claims for a relocation payment shall be filed with the Agency within 18 months after:

(i) For tenants, the date of displacement;

(ii) For owners, the date of displacement or the date of the final payment for the acquisition of the rea1 property, whichever is later.

(2) This time period shall be waived by the Agency for good cause.

(e) *Multiple occupants of one displacement dwelling.* If two or more occupants of the displacement dwelling move to separate replacement dwellings, each occupant is entitled to a reasonable prorated share, as determined by the Agency, of any relocation payments that would have been made if the occupants moved together to a comparable replacement dwelling. However, if the Agency determines that two or more occupants maintained separate households within the same dwelling, such occupants have separate entitlements to relocation payments.

(f) *Deductions from relocation payments.* An Agency shall deduct the amount of any advance relocation payment from the relocation payment(s) to which a displaced person is otherwise entitled. Similarly, a Federal agency shall, and a State agency may, deduct from relocation payments any rent that the displaced person owes the Agency; provided that no deduction shall be made if it would prevent the displaced person from obtaining a comparable replacement dwelling as required by § 24.204. The Agency shall not withhold any part of a relocation payment to a displaced person to satisfy an obligation to any other creditor.

(g) *Notice of denial of claim.* If the Agency disapproves all or part of a payment claimed or refuses to consider the claim on its merits because of untimely filing or other grounds, it shall promptly notify the claimant in writing of its determination, the basis for its determination, and the procedures for appealing that determination.

§ 24.208 Aliens not lawfully present in the United States.

(a) Each person seeking relocation payments or relocation advisory assistance shall, as a condition of eligibility, certify:

(1) In the case of an individual, that he or she is either a citizen or national of the United States, or an alien who is lawfully present in the United States.

(2) In the case of a family, that each family member is either a citizen or national of the United States, or an alien who is lawfully present in the United States. The certification may be made by the head of the household on behalf of other family members.

(3) In the case of an unincorporated business, farm, or nonprofit organization, that each owner is either a citizen or national of the United States, or an alien who is lawfully present in the United States. The certification may be made by the principal owner, manager, or operating officer on behalf of other persons with an ownership interest.

(4) In the case of an incorporated business, farm, or nonprofit organization, that the corporation is authorized to conduct business within the United States.

(b) The certification provided pursuant to paragraphs (a)(1), (a)(2), and (a)(3) of this section shall indicate whether such person is either a citizen or national of the United States, or an alien who is lawfully present in the United States. Requirements concerning the certification in addition to those contained in this rule shall be within the discretion of the Federal funding agency and, within those parameters, that of the displacing agency.

(c) In computing relocation payments under the Uniform Act, if any member(s) of a household or owner(s) of an unincorporated business, farm, or nonprofit organization is (are) determined to be ineligible because of a failure to be legally present in the United States, no relocation payments may be made to him or her. Any payment(s) for which such household, unincorporated business, farm, or nonprofit organization would otherwise be eligible shall be computed for the household, based on the number of eligible household members and for the unincorporated business, farm, or nonprofit organization, based on the ratio of ownership between eligible and ineligible owners.

(d) The displacing agency shall consider the certification provided pursuant to paragraph (a) of this section to be valid, unless the displacing agency determines in accordance with paragraph (f) of this section that it is invalid based on a review of an alien's documentation or other information that the agency considers reliable and appropriate.

(e) Any review by the displacing agency of the certifications provided pursuant to paragraph (a) of this section shall be conducted in a nondiscriminatory fashion. Each displacing agency will apply the same standard of review to all such certifications it receives, except that such standard may be revised periodically.

(f) If, based on a review of an alien's documentation or other credible evidence, a displacing agency has reason to believe that a person's certification is invalid (for example a document reviewed does not on its face reasonably appear to be genuine), and that, as a result, such person may be an alien not lawfully present in the United States, it shall obtain the following information before making a final determination.

(1) If the agency has reason to believe that the certification of a person who has certified that he or she is an alien lawfully present in the United States is invalid, the displacing agency shall obtain verification of the alien's status from the local Immigration and Naturalization Service (INS) Office. A list of local INS offices was published in the FEDERAL REGISTER in November 17, 1997 at 62 FR 61350. Any request for INS verification shall include the alien's full name, date of birth and alien number, and a copy of the alien's documentation. [If an agency is unable to contact the INS, it may contact the FHWA in Washington, DC at 202–366–2035 (Marshall Schy, Office of Real Estate Services) or 202–366–1371 (Reid Alsop, Office of Chief Counsel), for a referral to the INS.]

(2) If the agency has reason to believe that the certification of a person who has certified that he or she is a citizen or national is invalid, the displacing agency shall request evidence of United States citizenship or nationality from such person and, if considered necessary, verify the accuracy of such evidence with the issuer.

(g) No relocation payments or relocation advisory assistance shall be provided to a person who has not provided the certification described in this section or who has been determined to be not lawfully present in the United States, unless such person can demonstrate to the displacing agency's satisfaction that the denial of relocation benefits will result in an exceptional and extremely unusual hardship to such person's spouse, parent, or child who is a citizen of the United States, or is an alien lawfully admitted for permanent residence in the United States.

(h) For purposes of paragraph (g) of this section, ''exceptional and extremely unusual hardship'' to such spouse, parent, or child of the person not lawfully present in the United

States means that the denial of relocation payments and advisory assistance to such person will directly result in:

(1) A significant and demonstrable adverse impact on the health or safety of such spouse, parent, or child;

(2) A significant and demonstrable adverse impact on the continued existence of the family unit of which such spouse, parent, or child is a member; or

(3) Any other impact that the displacing agency determines will have a significant and demonstrable adverse impact on such spouse, parent, or child.

(i) The certification referred to in paragraph (a) of this section may be included as part of the claim for relocation payments described in § 24.207 of this part.

(Approved by the Office of Management and Budget under control number 2105–0508)

[64 FR 7132, Feb. 12, 1999]

§ 24.209 Relocation payments not considered as income.

No relocation payment received by a displaced person under this part shall be considered as income for the purpose of the Internal Revenue Code of 1954, which has been redesignated as the Internal Revenue Code of 1986 or for the purpose of determining the eligibility or the extent of eligibility of any person for assistance under the Social Security Act or any other Federal law, except for any Federal law providing low-income housing assistance.

[54 FR 8928, Mar. 2, 1989. Redesignated at 64 FR 7132, Feb. 12, 1999]

Subpart D—Payments for Moving and Related Expenses

§ 24.301 Payment for actual reasonable moving and related expenses—residential moves.

Any displaced owner-occupant or tenant of a dwelling who qualifies as a displaced person (defined at § 24.2) is entitled to payment of his or her actual moving and related expenses, as the Agency determines to be reasonable and necessary, including expenses for:

(a) Transportation of the displaced person and personal property. Transportation costs for a distance beyond 50 miles are not eligible, unless the Agency determines that relocation beyond 50 miles is justified.

(b) Packing, crating, unpacking, and uncrating of the personal property.

(c) Disconnecting, dismantling, removing, reassembling, and reinstalling relocated household appliances, and other personal property.

(d) Storage of the personal property for a period not to exceed l2 months, unless the Agency determines that a longer period is necessary.

(e) Insurance for the replacement value of the property in connection with the move and necessary storage.

(f) The replacement value of property lost, stolen, or damaged in the process of moving (not through the fault or negligence of the displaced person, his or her agent, or employee) where insurance covering such loss, theft, or damage is not reasonably available.

(g) Other moving-related expenses that are not listed as ineligible under § 24.305, as the Agency determines to be reasonable and necessary.

[54 FR 8928, Mar. 2, 1989, as amended at 64 FR 7132, Feb. 12, 1999]

§ 24.302 Fixed payment for moving expenses—residential moves.

Any person displaced from a dwelling or a seasonal residence is entitled to receive an expense and dislocation allowance as an alternative to a payment for actual moving and related expenses under § 24.301. This allowance shall be determined according to the applicable schedule approved by the Federal Highway Administration. This includes a provision that the expense and dislocation allowance to a person with minimal personal possessions who is in occupancy of a dormitory style room shared by two or more other unrelated persons or a person whose residential move is performed by an agency at no cost to the person shall be limited to $50.

§ 24.303 Payment for actual reasonable moving and related expenses—nonresidential moves.

(a) *Eligible costs.* Any business or farm operation which qualifies as a displaced person (defined at § 24.2) is entitled to payment for such actual moving

and related expenses, as the Agency determines to be reasonable and necessary, including expenses for:

(1) Transportation of personal property. Transportation costs for a distance beyond 50 miles are not eligible, unless the Agency determines that relocation beyond 50 miles is justified.

(2) Packing, crating, unpacking, and uncrating of the personal property.

(3) Disconnecting, dismantling, removing, reassembling, and reinstalling relocated machinery, equipment, and other personal property, including substitute personal property described at § 24.303(a)(12). This includes connection to utilities available nearby. It also includes modifications to the personal property necessary to adapt it to the replacement structure, the replacement site, or the utilities at the replacement site, and modifications necessary to adapt the utilities at the replacement site to the personal property. (Expenses for providing utilities from the right-of-way to the building or improvement are excluded.)

(4) Storage of the personal property for a period not to exceed 12 months, unless the Agency determines that a longer period is necessary.

(5) Insurance for the replacement value of the personal property in connection with the move and necessary storage.

(6) Any license, permit, or certification required of the displaced person at the replacement location. However, the payment may be based on the remaining useful life of the existing license, permit, or certification.

(7) The replacement value of property lost, stolen, or damaged in the process of moving (not through the fault or negligence of the displaced person, his or her agent, or employee) where insurance covering such loss, theft, or damage is not reasonably available.

(8) Professional services necessary for:

(i) Planning the move of the personal property,

(ii) Moving the personal property, and

(iii) Installing the relocated personal property at the replacement location.

(9) Relettering signs and replacing stationery on hand at the time of displacement that are made obsolete as a result of the move.

(10) Actual direct loss of tangible personal property incurred as a result of moving or discontinuing the business or farm operation. The payment shall consist of the lesser of:

(i) The fair market value of the item for continued use at the displacement site, less the proceeds from its sale. (To be eligible for payment, the claimant must make a good faith effort to sell the personal property, unless the Agency determines that such effort is not necessary. When payment for property loss is claimed for goods held for sale, the fair market value shall be based on the cost of the goods to the business, not the potential selling price.); or

(ii) The estimated cost of moving the item, but with no allowance for storage. (If the business or farm operation is discontinued, the estimated cost shall be based on a moving distance of 50 miles.)

(11) The reasonable cost incurred in attempting to sell an item that is not to be relocated.

(12) Purchase of substitute personal property. If an item of personal property which is used as part of a business or farm operation is not moved but is promptly replaced with a substitute item that performs a comparable function at the replacement site, the displaced person is entitled to payment of the lesser of:

(i) The cost of the substitute item, including installation costs at the replacement site, minus any proceeds from the sale or trade-in of the replaced item; or

(ii) The estimated cost of moving and reinstalling the replaced item but with no allowance for storage. At the Agency's discretion, the estimated cost for a low cost or uncomplicated move may be based on a single bid or estimate.

(13) Searching for a replacement location. A displaced business or farm operation is entitled to reimbursement for actual expenses, not to exceed $1,000, as the Agency determines to be reasonable, which are incurred in searching for a replacement location, including:

(i) Transportation.

(ii) Meals and lodging away from home.

(iii) Time spent searching, based on reasonable salary or earnings.

(iv) Fees paid to a real estate agent or broker to locate a replacement site, exclusive of any fees or commissions related to the purchase of such site.

(14) Other moving-related expenses that are not listed as ineligible under § 24.305, as the Agency determines to be reasonable and necessary.

(b) *Notification and inspection.* The following requirements apply to payments under this section:

(1) The Agency shall inform the displaced person, in writing, of the requirements of paragraphs (b) (2) and (3) of this section as soon as possible after the initiation of negotiations. This information may be included in the relocation information provided to the displaced person as set forth in § 24.203.

(2) The displaced person must provide the Agency reasonable advance written notice of the approximate date of the start of the move or disposition of the personal property and a list of the items to be moved. However, the Agency may waive this notice requirement after documenting its file accordingly.

(3) The displaced person must permit the Agency to make reasonable and timely inspections of the personal property at both the displacement and replacement sites and to monitor the move.

(c) *Self moves.* If the displaced person elects to take full responsibility for the move of the business or farm operation, the Agency may make a payment for the person's moving expenses in an amount not to exceed the lower of two acceptable bids or estimates obtained by the Agency or prepared by qualified staff. At the Agency's discretion, a payment for a low cost or uncomplicated move may be based on a single bid or estimate.

(d) *Transfer of ownership.* Upon request and in accordance with applicable law, the claimant shall transfer to the Agency ownership of any personal property that has not been moved, sold, or traded in.

(e) *Advertising signs.* The amount of a payment for direct loss of an advertising sign which is personal property shall be the lesser of:

(1) The depreciated reproduction cost of the sign, as determined by the Agency, less the proceeds from its sale; or

(2) The estimated cost of moving the sign, but with no allowance for storage.

[54 FR 8928, Mar. 2, 1989, as amended at 64 FR 7132, Feb. 12, 1999]

§ 24.304 Reestablishment expenses—nonresidential moves.

In addition to the payments available under § 24.303 of this subpart, a small business, as defined in § 24.2, farm or nonprofit organization is entitled to receive a payment, not to exceed $10,000, for expenses actually incurred in relocating and reestablishing such small business, farm or nonprofit organization at a replacement site.

(a) *Eligible expenses.* Reestablishment expenses must be reasonable and necessary, as determined by the Agency. They include, but are not limited to, the following:

(1) Repairs or improvements to the replacement real property as required by Federal, State or local law, code or ordinance.

(2) Modifications to the replacement property to accommodate the business operation or make replacement structures suitable for conducting the business.

(3) Construction and installation costs for exterior signing to advertise the business.

(4) Provision of utilities from right-of-way to improvements on the replacement site.

(5) Redecoration or replacement of soiled or worn surfaces at the replacement site, such as paint, panelling, or carpeting.

(6) Licenses, fees and permits when not paid as part of moving expenses.

(7) Feasibility surveys, soil testing and marketing studies.

(8) Advertisement of replacement location.

(9) Professional services in connection with the purchase or lease of a replacement site.

(10) Estimated increased costs of operation during the first 2 years at the replacement site for such items as:

(i) Lease or rental charges,

(ii) Personal or real property taxes,

(iii) Insurance premiums, and

(iv) Utility charges, excluding impact fees.

(11) Impact fees or one-time assessments for anticipated heavy utility usage.

(12) Other items that the Agency considers essential to the reestablishment of the business.

(b) *Ineligible expenses.* The following is a nonexclusive listing of reestablishment expenditures not considered to be reasonable, necessary, or otherwise eligible:

(1) Purchase of capital assets, such as, office furniture, filing cabinets, machinery, or trade fixtures.

(2) Purchase of manufacturing materials, production supplies, product inventory, or other items used in the normal course of the business operation.

(3) Interest on money borrowed to make the move or purchase the replacement property.

(4) Payment to a part-time business in the home which does not contribute materially to the household income.

[54 FR 8928, Mar. 2, 1989, as amended at 58 FR 26072, Apr. 30, 1993; 64 FR 7132, Feb. 12, 1999]

§ 24.305 Ineligible moving and related expenses.

A displaced person is not entitled to payment for:

(a) The cost of moving any structure or other real property improvement in which the displaced person reserved ownership. However, this part does not preclude the computation under § 24.401(c)(4)(iii); or

(b) Interest on a loan to cover moving expenses; or

(c) Loss of goodwill; or

(d) Loss of profits; or

(e) Loss of trained employees; or

(f) Any additional operating expenses of a business or farm operation incurred because of operating in a new location except as provided in § 24.304(a)(10); or

(g) Personal injury; or

(h) Any legal fee or other cost for preparing a claim for a relocation payment or for representing the claimant before the Agency; or

(i) Expenses for searching for a replacement dwelling; or

(j) Physical changes to the real property at the replacement location of a business or farm operation except as provided in §§ 24.303(a)(3) and § 24.304(a); or

(k) Costs for storage of personal property on real property already owned or leased by the displaced person.

§ 24.306 Fixed payment for moving expenses—nonresidential moves.

(a) *Business.* A displaced business may be eligible to choose a fixed payment in lieu of the payments for actual moving and related expenses, and actual reasonable reestablishment expenses provided by §§ 24.303 and 24.304. Such fixed payment, except for payment to a nonprofit organization, shall equal the average annual net earnings of the business, as computed in accordance with paragraph (e) of this section, but not less than $1,000 nor more than $20,000. The displaced business is eligible for the payment if the Agency determines that:

(1) The business owns or rents personal property which must be moved in connection with such displacement and for which an expense would be incurred in such move; and, the business vacates or relocates from its displacement site.

(2) The business cannot be relocated without a substantial loss of its existing patronage (clientele or net earnings). A business is assumed to meet this test unless the Agency determines that it will not suffer a substantial loss of its existing patronage; and

(3) The business is not part of a commercial enterprise having more than three other entities which are not being acquired by the Agency, and which are under the same ownership and engaged in the same or similar business activities.

(4) The business is not operated at a displacement dwelling solely for the purpose of renting such dwelling to others.

(5) The business is not operated at the displacement site solely for the purpose of renting the site to others.

(6) The business contributed materially to the income of the displaced person during the 2 taxable years prior to displacement (see § 24.2).

(b) *Determining the number of businesses.* In determining whether two or

more displaced legal entities constitute a single business which is entitled to only one fixed payment, all pertinent factors shall be considered, including the extent to which:

(1) The same premises and equipment are shared;

(2) Substantially identical or interrelated business functions are carried out and business and financial affairs are commingled;

(3) The entities are held out to the public, and to those customarily dealing with them, as one business; and

(4) The same person or closely related persons own, control, or manage the affairs of the entities.

(c) *Farm operation*. A displaced farm operation (defined at § 24.2) may choose a fixed payment, in lieu of the payments for actual moving and related expenses and actual reasonable reestablishment expenses, in an amount equal to its average annual net earnings as computed in accordance with paragraph (e) of this section, but not less than $1,000 nor more than $20,000. In the case of a partial acquisition of land which was a farm operation before the acquisition, the fixed payment shall be made only if the Agency determines that:

(1) The acquisition of part of the land caused the operator to be displaced from the farm operation on the remaining land; or

(2) The partial acquisition caused a substantial change in the nature of the farm operation.

(d) *Nonprofit organization*. A displaced nonprofit organization may choose a fixed payment of $1,000 to $20,000, in lieu of the payments for actual moving and related expenses and actual reasonable reestablishment expenses, if the Agency determines that it cannot be relocated without a substantial loss of existing patronage (membership or clientele). A nonprofit organization is assumed to meet this test, unless the Agency demonstrates otherwise. Any payment in excess of $1,000 must be supported with financial statements for the two 12-month periods prior to the acquisition. The amount to be used for the payment is the average of 2 years annual gross revenues less administrative expenses. (See appendix A of this part).

(e) *Average annual net earnings of a business or farm operation*. The average annual net earnings of a business or farm operation are one-half of its net earnings before Federal, State, and local income taxes during the 2 taxable years immediately prior to the taxable year in which it was displaced. If the business or farm was not in operation for the full 2 taxable years prior to displacement, net earnings shall be based on the actual period of operation at the displacement site during the 2 taxable years prior to displacement, projected to an annual rate. Average annual net earnings may be based upon a different period of time when the Agency determines it to be more equitable. Net earnings include any compensation obtained from the business or farm operation by its owner, the owner's spouse, and dependents. The displaced person shall furnish the Agency proof of net earnings through income tax returns, certified financial statements, or other reasonable evidence which the Agency determines is satisfactory.

[54 FR 8928, Mar. 2, 1989, as amended at 64 FR 7132, Feb. 12, 1999]

§ 24.307 Discretionary utility relocation payments.

(a) Whenever a program or project undertaken by a displacing agency causes the relocation of a utility facility (see §§ 24.2) and the relocation of the facility creates extraordinary expenses for its owner, the displacing agency may, at its option, make a relocation payment to the owner for all or part of such expenses, if the following criteria are met:

(1) The utility facility legally occupies State or local government property, or property over which the State or local government has an easement or right-of-way; and

(2) The utility facility's right of occupancy thereon is pursuant to State law or local ordinance specifically authorizing such use, or where such use and occupancy has been granted through a franchise, use and occupancy permit, or other similar agreement; and

(3) Relocation of the utility facility is required by and is incidental to the

primary purpose of the project or program undertaken by the displacing agency; and

(4) There is no Federal law, other than the Uniform Act, which clearly establishes a policy for the payment of utility moving costs that is applicable to the displacing agency's program or project; and

(5) State or local government reimbursement for utility moving costs or payment of such costs by the displacing agency is in accordance with State law.

(b) For the purposes of this section, the term *extraordinary expenses* means those expenses which, in the opinion of the displacing agency, are not routine or predictable expenses relating to the utility's occupancy of rights-of-way, and are not ordinarily budgeted as operating expenses, unless the owner of the utility facility has explicitly and knowingly agreed to bear such expenses as a condition for use of the property, or has voluntarily agreed to be responsible for such expenses.

(c) A relocation payment to a utility facility owner for moving costs under this section may not exceed the cost to functionally restore the service disrupted by the federally assisted program or project, less any increase in value of the new facility and salvage value of the old facility. The displacing agency and the utility facility owner shall reach prior agreement on the nature of the utility relocation work to be accomplished, the eligibility of the work for reimbursement, the responsibilities for financing and accomplishing the work, and the method of accumulating costs and making payment. (See appendix A, of this part, § 24.307.)

[54 FR 8928, Mar. 2, 1989, as amended at 64 FR 7132, Feb. 12, 1999]

Subpart E—Replacement Housing Payments

§ 24.401 Replacement housing payment for 180-day homeowner-occupants.

(a) *Eligibility*. A displaced person is eligible for the replacement housing payment for a 180-day homeowner-occupant if the person:

(1) Has actually owned and occupied the displacement dwelling for not less than 180 days immediately prior to the initiation of negotiations; and

(2) Purchases and occupies a decent, safe, and sanitary replacement dwelling within one year after the later of the following dates (except that the Agency may extend such one year period for good cause):

(i) The date the person receives final payment for the displacement dwelling or, in the case of condemnation, the date the full amount of the estimate of just compensation is deposited in the court, or

(ii) The date the displacing agency's obligation under § 24.204 is met.

(b) *Amount of payment*. The replacement housing payment for an eligible 180-day homeowner-occupant may not exceed $22,500. (See also § 24.404.) The payment under this subpart is limited to the amount necessary to relocate to a comparable replacement dwelling within one year from the date the displaced homeowner-occupant is paid for the displacement dwelling, or the date a comparable replacement dwelling is made available to such person, whichever is later. The payment shall be the sum of:

(1) The amount by which the cost of a replacement dwelling exceeds the acquisition cost of the displacement dwelling, as determined in accordance with paragraph (c) of this section; and

(2) The increased interest costs and other debt service costs which are incurred in connection with the mortgage(s) on the replacement dwelling, as determined in accordance with paragraph (d) of this section; and

(3) The reasonable expenses incidental to the purchase of the replacement dwelling, as determined in accordance with paragraph (e) of this section.

(c) *Price differential*—(1) *Basic computation*. The price differential to be paid under paragraph (b)(1) of this section is the amount which must be added to the acquisition cost of the displacement dwelling to provide a total amount equal to the lesser of:

(i) The reasonable cost of a comparable replacement dwelling as determined in accordance with § 24.403(a); or

(ii) The purchase price of the decent, safe, and sanitary replacement dwelling actually purchased and occupied by the displaced person.

(2) *Mixed-use and multifamily properties.* If the displacement dwelling was part of a property that contained another dwelling unit and/or space used for non-residential purposes, and/or is located on a lot larger than typical for residential purposes, only that portion of the acquisition payment which is actually attributable to the displacement dwelling shall be considered its acquisition cost when computing the price differential.

(3) *Insurance proceeds.* To the extent necessary to avoid duplicate compensation, the amount of any insurance proceeds received by a person in connection with a loss to the displacement dwelling due to a catastrophic occurrence (fire, flood, etc.) shall be included in the acquisition cost of the displacement dwelling when computing the price differential. (Also see § 24.3.)

(4) *Owner retention of displacement dwelling.* If the owner retains ownership of his or her dwelling, moves it from the displacement site, and reoccupies it on a replacement site, the purchase price of the replacement dwelling shall be the sum of:

(i) The cost of moving and restoring the dwelling to a condition comparable to that prior to the move; and

(ii) The cost of making the unit a decent, safe, and sanitary replacement dwelling (defined at § 24.2); and

(iii) The current fair market value for residential use of the replacement site (see appendix A of this part, § 24.401(c)(4)(iii)), unless the claimant rented the displacement site and there is a reasonable opportunity for the claimant to rent a suitable replacement site; and

(iv) The retention value of the dwelling, if such retention value is reflected in the ''acquisition cost'' used when computing the replacement housing payment.

(d) *Increased mortgage interest costs.* The displacing agency shall determine the factors to be used in computing the amount to be paid to a displaced person under paragraph (b)(2) of this section. The payment for increased mortgage interest cost shall be the amount which will reduce the mortgage balance on a new mortgage to an amount which could be amortized with the same monthly payment for principal and interest as that for the mortgage(s) on the displacement dwelling. In addition, payments shall include other debt service costs, if not paid as incidental costs, and shall be based only on bona fide mortgages that were valid liens on the displacement dwelling for at least 180 days prior to the initiation of negotiations. Paragraphs (d) (1) through (5) of this section shall apply to the computation of the increased mortgage interest costs payment, which payment shall be contingent upon a mortgage being placed on the replacement dwelling.

(1) The payment shall be based on the unpaid mortgage balance(s) on the displacement dwelling; however, in the event the person obtains a smaller mortgage than the mortgage balance(s) computed in the buydown determination the payment will be prorated and reduced accordingly. (See appendix A of this part.) In the case of a home equity loan the unpaid balance shall be that balance which existed 180 days prior to the initiation of negotiations or the balance on the date of acquisition, whichever is less.

(2) The payment shall be based on the remaining term of the mortgage(s) on the displacement dwelling or the term of the new mortgage, whichever is shorter.

(3) The interest rate on the new mortgage used in determining the amount of the payment shall not exceed the prevailing fixed interest rate for conventional mortgages currently charged by mortgage lending institutions in the area in which the replacement dwelling is located.

(4) Purchaser's points and loan origination or assumption fees, but not seller's points, shall be paid to the extent:

(i) They are not paid as incidental expenses;

(ii) They do not exceed rates normal to similar real estate transactions in the area;

(iii) The Agency determines them to be necessary; and

(iv) The computation of such points and fees shall be based on the unpaid mortgage balance on the displacement

dwelling, less the amount determined for the reduction of such mortgage balance under this section.

(5) The displaced person shall be advised of the approximate amount of this payment and the conditions that must be met to receive the payment as soon as the facts relative to the person's current mortgage(s) are known and the payment shall be made available at or near the time of closing on the replacement dwelling in order to reduce the new mortgage as intended.

(e) *Incidental expenses.* The incidental expenses to be paid under paragraph (b)(3) of this section or § 24.402(c)(1) are those necessary and reasonable costs actually incurred by the displaced person incident to the purchase of a replacement dwelling, and customarily paid by the buyer, including:

(1) Legal, closing, and related costs, including those for title search, preparing conveyance instruments, notary fees, preparing surveys and plats, and recording fees.

(2) Lender, FHA, or VA application and appraisal fees.

(3) Loan origination or assumption fees that do not represent prepaid interest.

(4) Certification of structural soundness and termite inspection when required.

(5) Credit report.

(6) Owner's and mortgagee's evidence of title, e.g., title insurance, not to exceed the costs for a comparable replacement dwelling.

(7) Escrow agent's fee.

(8) State revenue or documentary stamps, sales or transfer taxes (not to exceed the costs for a comparable replacement dwelling).

(9) Such other costs as the Agency determines to be incidental to the purchase.

(f) *Rental assistance payment for 180-day homeowner.* A 180-day homeowner-occupant, who could be eligible for a replacement housing payment under paragraph (a) of this section but elects to rent a replacement dwelling, is eligible for a rental assistance payment not to exceed $5,250, computed and disbursed in accordance with § 24.402(b).

[54 FR 8928, Mar. 2, 1989, as amended at 64 FR 7132, Feb. 12, 1999]

§ 24.402 Replacement housing payment for 90-day occupants.

(a) *Eligibility.* A tenant or owner-occupant displaced from a dwelling is entitled to a payment not to exceed $5,250 for rental assistance, as computed in accordance with paragraph (b) of this section, or downpayment assistance, as computed in accordance with paragraph (c) of this section, if such displaced person:

(1) Has actually and lawfully occupied the displacement dwelling for at least 90 days immediately prior to the initiation of negotiations; and

(2) Has rented, or purchased, and occupied a decent, safe, and sanitary replacement dwelling within 1 year (unless the Agency extends this period for good cause) after:

(i) For a tenant, the date he or she moves from the displacement dwelling, or

(ii) For an owner-occupant, the later of:

(A) The date he or she receives final payment for the displacement dwelling, or in the case of condemnation, the date the full amount of the estimate of just compensation is deposited with the court; or

(B) The date he or she moves from the displacement dwelling.

(b) *Rental assistance payment*—(1) *Amount of payment.* An eligible displaced person who rents a replacement dwelling is entitled to a payment not to exceed $5,250 for rental assistance. (See also § 24.404.) Such payment shall be 42 times the amount obtained by subtracting the base monthly rental for the displacement dwelling from the lesser of:

(i) The monthly rent and estimated average monthly cost of utilities for a comparable replacement dwelling; or

(ii) The monthly rent and estimated average monthly cost of utilities for the decent, safe, and sanitary replacement dwelling actually occupied by the displaced person.

(2) *Base monthly rental for displacement dwelling.* The base monthly rental for the displacement dwelling is the lesser of:

(i) The average monthly cost for rent and utilities at the displacement dwelling for a reasonable period prior to displacement, as determined by the Agency. (For an owner-occupant, use the fair market rent for the displacement dwelling. For a tenant who paid little or no rent for the displacement dwelling, use the fair market rent, unless its use would result in a hardship because of the person's income or other circumstances); or

(ii) Thirty (30) percent of the person's average gross household income. (If the person refuses to provide appropriate evidence of income or is a dependent, the base monthly rental shall be established solely on the criteria in paragraph (b)(2)(i) of this section. A full time student or resident of an institution may be assumed to be a dependent, unless the person demonstrates otherwise.); or

(iii) The total of the amounts designated for shelter and utilities if receiving a welfare assistance payment from a program that designates the amounts for shelter and utilities.

(3) *Manner of disbursement.* A rental assistance payment may, at the Agency's discretion, be disbursed in either a lump sum or in installments. However, except as limited by § 24.403(f), the full amount vests immediately, whether or not there is any later change in the person's income or rent, or in the condition or location of the person's housing.

(c) *Downpayment assistance payment*—(1) *Amount of payment.* An eligible displaced person who purchases a replacement dwelling is entitled to a downpayment assistance payment in the amount the person would receive under paragraph (b) of this section if the person rented a comparable replacement dwelling. At the discretion of the Agency, a downpayment assistance payment may be increased to any amount not to exceed $5,250. However, the payment to a displaced homeowner shall not exceed the amount the owner would receive under § 24.401(b) if he or she met the 180-day occupancy requirement. An Agency's discretion to provide the maximum payment shall be exercised in a uniform and consistent manner, so that eligible displaced persons in like circumstances are treated equally. A displaced person eligible to receive a payment as a 180-day owner-occupant under § 24.401(a) is not eligible for this payment. (See also appendix A of this part, § 24.402(c).)

(2) *Application of payment.* The full amount of the replacement housing payment for downpayment assistance must be applied to the purchase price of the replacement dwelling and related incidental expenses.

§ 24.403 Additional rules governing replacement housing payments.

(a) *Determining cost of comparable replacement dwelling.* The upper limit of a replacement housing payment shall be based on the cost of a comparable replacement dwelling (defined at § 24.2).

(1) If available, at least three comparable replacement dwellings shall be examined and the payment computed on the basis of the dwelling most nearly representative of, and equal to, or better than, the displacement dwelling. An adjustment shall be made to the asking price of any dwelling, to the extent justified by local market data (see also § 24.205(a)(2) and appendix A of this part). An obviously overpriced dwelling may be ignored.

(2) If the site of the comparable replacement dwelling lacks a major exterior attribute of the displacement dwelling site, (e.g., the site is significantly smaller or does not contain a swimming pool), the value of such attribute shall be subtracted from the acquisition cost of the displacement dwelling for purposes of computing the payment.

(3) If the acquisition of a portion of a typical residential property causes the displacement of the owner from the dwelling and the remainder is a buildable residential lot, the Agency may offer to purchase the entire property. If the owner refuses to sell the remainder to the Agency, the fair market value of the remainder may be added to the acquisition cost of the displacement dwelling for purposes of computing the replacement housing payment.

(4) To the extent feasible, comparable replacement dwellings shall be selected from the neighborhood in which the displacement dwelling was located or, if that is not possible, in nearby or

similar neighborhoods where housing costs are generally the same or higher.

(b) *Inspection of replacement dwelling.* Before making a replacement housing payment or releasing a payment from escrow, the Agency or its designated representative shall inspect the replacement dwelling and determine whether it is a decent, safe, and sanitary dwelling as defined at § 24.2.

(c) *Purchase of replacement dwelling.* A displaced person is considered to have met the requirement to purchase a replacement dwelling, if the person:

(1) Purchases a dwelling; or

(2) Purchases and rehabilitates a substandard dwelling; or

(3) Relocates a dwelling which he or she owns or purchases; or

(4) Constructs a dwelling on a site he or she owns or purchases; or

(5) Contracts for the purchase or construction of a dwelling on a site provided by a builder or on a site the person owns or purchases.

(6) Currently owns a previously purchased dwelling and site, valuation of which shall be on the basis of current fair market value.

(d) *Occupancy requirements for displacement or replacement dwelling.* No person shall be denied eligibility for a replacement housing payment solely because the person is unable to meet the occupancy requirements set forth in these regulations for a reason beyond his or her control, including:

(1) A disaster, an emergency, or an imminent threat to the public health or welfare, as determined by the President, the Federal agency funding the project, or the displacing agency; or

(2) Another reason, such as a delay in the construction of the replacement dwelling, military reserve duty, or hospital stay, as determined by the Agency.

(e) *Conversion of payment.* A displaced person who initially rents a replacement dwelling and receives a rental assistance payment under § 24.402(b) is eligible to receive a payment under § 24.401 or § 24.402(c) if he or she meets the eligibility criteria for such payments, including purchase and occupancy within the prescribed 1-year period. Any portion of the rental assistance payment that has been disbursed shall be deducted from the payment computed under § 24.401 or § 24.402(c).

(f) *Payment after death.* A replacement housing payment is personal to the displaced person and upon his or her death the undisbursed portion of any such payment shall not be paid to the heirs or assigns, except that:

(1) The amount attributable to the displaced person's period of actual occupancy of the replacement housing shall be paid.

(2) The full payment shall be disbursed in any case in which a member of a displaced family dies and the other family member(s) continue to occupy a decent, safe, and sanitary replacement dwelling.

(3) Any portion of a replacement housing payment necessary to satisfy the legal obligation of an estate in connection with the selection of a replacement dwelling by or on behalf of a deceased person shall be disbursed to the estate.

[54 FR 8928, Mar. 2, 1989, as amended at 64 FR 7132, Feb. 12, 1999]

§ 24.404 Replacement housing of last resort.

(a) *Determination to provide replacement housing of last resort.* Whenever a program or project cannot proceed on a timely basis because comparable replacement dwellings are not available within the monetary limits for owners or tenants, as specified in § 24.401 or § 24.402, as appropriate, the Agency shall provide additional or alternative assistance under the provisions of this subpart. Any decision to provide last resort housing assistance must be adequately justified either:

(1) On a case-by-case basis, for good cause, which means that appropriate consideration has been given to:

(i) The availability of comparable replacement housing in the program or project area; and

(ii) The resources available to provide comparable replacement housing; and

(iii) The individual circumstances of the displaced person; or

(2) By a determination that:

(i) There is little, if any, comparable replacement housing available to displaced persons within an entire program or project area; and, therefore,

last resort housing assistance is necessary for the area as a whole; and

(ii) A program or project cannot be advanced to completion in a timely manner without last resort housing assistance; and

(iii) The method selected for providing last resort housing assistance is cost effective, considering all elements which contribute to total program or project costs. (Will project delay justify waiting for less expensive comparable replacement housing to become available?)

(b) *Basic rights of persons to be displaced.* Notwithstanding any provision of this subpart, no person shall be required to move from a displacement dwelling unless comparable replacement housing is available to such person. No person may be deprived of any rights the person may have under the Uniform Act or this part. The Agency shall not require any displaced person to accept a dwelling provided by the Agency under these procedures (unless the Agency and the displaced person have entered into a contract to do so) in lieu of any acquisition payment or any relocation payment for which the person may otherwise be eligible.

(c) *Methods of providing comparable replacement housing.* Agencies shall have broad latitude in implementing this subpart, but implementation shall be for reasonable cost, on a case-by-case basis unless an exception to case-by-case analysis is justified for an entire project.

(1) The methods of providing replacement housing of last resort include, but are not limited to:

(i) A replacement housing payment in excess of the limits set forth in § 24.401 or § 24.402. A rental assistance subsidy under this section may be provided in installments or in a lump sum at the Agency's discretion.

(ii) Rehabilitation of and/or additions to an existing replacement dwelling.

(iii) The construction of a new replacement dwelling.

(iv) The provision of a direct loan, which requires regular amortization or deferred repayment. The loan may be unsecured or secured by the real property. The loan may bear interest or be interest-free.

(v) The relocation and, if necessary, rehabilitation of a dwelling.

(vi) The purchase of land and/or a replacement dwelling by the displacing agency and subsequent sale or lease to, or exchange with a displaced person.

(vii) The removal of barriers to the handicapped.

(viii) The change in status of the displaced person with his or her concurrence from tenant to homeowner when it is more cost effective to do so, as in cases where a downpayment may be less expensive than a last resort rental assistance payment.

(2) Under special circumstances, consistent with the definition of a comparable replacement dwelling, modified methods of providing replacement housing of last resort permit consideration of replacement housing based on space and physical characteristics different from those in the displacement dwelling (see appendix A, of this part, § 24.404), including upgraded, but smaller replacement housing that is decent, safe, and sanitary and adequate to accommodate individuals or families displaced from marginal or substandard housing with probable functional obsolesence. In no event, however, shall a displaced person be required to move into a dwelling that is not functionally equivalent in accordance with § 24.2).

(3) The agency shall provide assistance under this subpart to a displaced person who is not eligible to receive a replacement housing payment under §§ 24.401 and 24.402 because of failure to meet the length of occupancy requirement when comparable replacement rental housing is not available at rental rates within the person's financial means, which is 30 percent of the person's gross monthly household income. Such assistance shall cover a period of 42 months.

[54 FR 8928, Mar. 2, 1989, as amended at 64 FR 7132, Feb. 12, 1999]

Subpart F—Mobile Homes

§ 24.501 Applicability.

This subpart describes the requirements governing the provision of relocation payments to a person displaced from a mobile home and/or mobile

home site who meets the basic eligibility requirements of this part. Except as modified by this subpart, such a displaced person is entitled to a moving expense payment in accordance with subpart D and a replacement housing payment in accordance with subpart E to the same extent and subject to the same requirements as persons displaced from conventional dwellings.

§ 24.502 Moving and related expenses—mobile homes.

(a) A homeowner-occupant displaced from a mobile home or mobile homesite is entitled to a payment for the cost of moving his or her mobile home on an actual cost basis in accordance with § 24.301. A non-occupant owner of a rented mobile home is eligible for actual cost reimbursement under § 24.303. However, if the mobile home is not acquired, but the homeowner-occupant obtains a replacement housing payment under one of the circumstances described at § 24.503(a)(3), the owner is not eligible for payment for moving the mobile home, but may be eligible for a payment for moving personal property from the mobile home.

(b) The following rules apply to payments for actual moving expenses under § 24.301:

(1) A displaced mobile homeowner, who moves the mobile home to a replacement site, is eligible for the reasonable cost of disassembling, moving, and reassembling any attached appurtenances, such as porches, decks, skirting, and awnings, which were not acquired, anchoring of the unit, and utility ''hook-up'' charges.

(2) If a mobile home requires repairs and/or modifications so that it can be moved and/or made decent, safe, and sanitary, and the Agency determines that it would be economically feasible to incur the additional expense, the reasonable cost of such repairs and/or modifications is reimbursable.

(3) A nonreturnable mobile home park entrance fee is reimbursable to the extent it does not exceed the fee at a comparable mobile home park, if the person is displaced from a mobile home park or the Agency determines that payment of the fee is necessary to effect relocation.

§ 24.503 Replacement housing payment for 180-day mobile homeowner-occupants.

(a) A displaced owner-occupant of a mobile home is entitled to a replacement housing payment, not to exceed $22,500, under § 24.401 if:

(1) The person both owned the displacement mobile home and occupied it on the displacement site for at least 180 days immediately prior to the initiation of negotiations;

(2) The person meets the other basic eligibility requirements at § 24.401(a); and

(3) The Agency acquires the mobile home and/or mobile home site, or the mobile home is not acquired by the Agency but the owner is displaced from the mobile home because the Agency determines that the mobile home:

(i) Is not and cannot economically be made decent, safe, and sanitary; or

(ii) Cannot be relocated without substantial damage or unreasonable cost; or

(iii) Cannot be relocated because there is no available comparable replacement site; or

(iv) Cannot be relocated because it does not meet mobile home park entrance requirements.

(b) If the mobile home is not acquired, and the Agency determines that it is not practical to relocate it, the acquisition cost of the displacement dwelling used when computing the price differential amount, described at § 24.401(c), shall include the salvage value or trade-in value of the mobile home, whichever is higher.

§ 24.504 Replacement housing payment for 90-day mobile home occupants.

A displaced tenant or owner-occupant of a mobile home is eligible for a replacement housing payment, not to exceed $5,250, under § 24.402 if:

(a) The person actually occupied the displacement mobile home on the displacement site for at least 90 days immediately prior to the initiation of negotiations;

(b) The person meets the other basic eligibility requirements at § 24.402(a); and

(c) The Agency acquires the mobile home and/or mobile home site, or the mobile home is not acquired by the

Agency but the owner or tenant is displaced from the mobile home because of one of the circumstances described at § 24.503(a)(3).

§ 24.505 Additional rules governing relocation payments to mobile home occupants.

(a) *Replacement housing payment based on dwelling and site.* Both the mobile home and mobile home site must be considered when computing a replacement housing payment. For example, a displaced mobile home occupant may have owned the displacement mobile home and rented the site or may have rented the displacement mobile home and owned the site. Also, a person may elect to purchase a replacement mobile home and rent a replacement site, or rent a replacement mobile home and purchase a replacement site. In such cases, the total replacement housing payment shall consist of a payment for a dwelling and a payment for a site, each computed under the applicable section in subpart E. However, the total replacement housing payment under subpart E shall not exceed the maximum payment (either $22,500 or $5,250) permitted under the section that governs the computation for the dwelling. (See also § 24.403(b).)

(b) *Cost of comparable replacement dwelling*—(1) If a comparable replacement mobile home is not available, the replacement housing payment shall be computed on the basis of the reasonable cost of a conventional comparable replacement dwelling.

(2) If the Agency determines that it would be practical to relocate the mobile home, but the owner-occupant elects not to do so, the Agency may determine that, for purposes of computing the price differential under § 24.401(c), the cost of a comparable replacement dwelling is the sum of:

(i) The value of the mobile home,

(ii) The cost of any necessary repairs or modifications, and

(iii) The estimated cost of moving the mobile home to a replacement site.

(c) *Initiation of negotiations.* If the mobile home is not actually acquired, but the occupant is considered displaced under this part, the ''initiation of negotiations'' is the initiation of negotiations to acquire the land, or, if the land is not acquired, the written notification that he or she is a displaced person under this part.

(d) *Person moves mobile home.* If the owner is reimbursed for the cost of moving the mobile home under this part, he or she is not eligible to receive a replacement housing payment to assist in purchasing or renting a replacement mobile home. The person may, however, be eligible for assistance in purchasing or renting a replacement site.

(e) *Partial acquisition of mobile home park.* The acquisition of a portion of a mobile home park property may leave a remaining part of the property that is not adequate to continue the operation of the park. If the Agency determines that a mobile home located in the remaining part of the property must be moved as a direct result of the project, the owner and any tenant shall be considered a displaced person who is entitled to relocation payments and other assistance under this part.

Subpart G—Certification

§ 24.601 Purpose.

This subpart permits a State agency to fulfill its responsibilities under the Uniform Act by certifying that it shall operate in accordance with State laws and regulations which shall accomplish the purpose and effect of the Uniform Act, in lieu of providing the assurances required by § 24.4 of this part.

[54 FR 8928, Mar. 2, 1989; 54 FR 24712, June 9, 1989]

§ 24.602 Certification application.

An agency wishing to proceed on the basis of a certification may request an application for certification from the lead agency [Director, Office of Right-of-Way, HRW–1, Federal Highway Administration, 400 Seventh St. SW., Washington, DC 20590]. The completed application for certification must be approved by the governor of the State, or the governor's designee, and must be coordinated with the Federal funding agency, in accordance with application procedures.

[58 FR 26072, April 30, 1993]

§ 24.603 Monitoring and corrective action.

(a) The Federal lead agency shall, in coordination with other Federal agencies, monitor from time to time State agency implementation of programs or projects conducted under the certification process and the State agency shall make available any information required for this purpose.

(b) A Federal agency that has accepted a State agency's certification pursuant to this subpart should withhold its approval of any of its Federal financial assistance to any project, program, or activity, in progress or to be undertaken by such State agency, if it is found by the Federal agency that the State agency has failed to comply with the applicable State law and regulations implementing those provisions of the Uniform Act for which the State agency would otherwise have provided the assurances required by sections 210 and 305 of the Uniform Act. The Federal agency may withhold Federal financial assistance if the certifying State agency fails to comply with the applicable State law and regulations implementing other provisions of the Uniform Act. The Federal agency shall notify the lead agency at least 15 days prior to any decision to withhold funds under this subpart. The lead agency may consult with the Federal agency upon receiving such notification. The lead agency will also inform other Federal agencies which have accepted certification under this subpart from the same State agency of the pending action.

(c) A Federal agency may, after consultation with the lead agency, and notice to and consultation with the governor, or his or her designee, rescind any previous approval provided under this subpart if the certifying State agency fails to comply with its certification or with applicable State law and regulations. The Federal agency shall initiate consultation with the lead agency at least 30 days prior to any decision to rescind approval of a certification under this subpart. The lead agency will also inform other Federal agencies which have accepted a certification under this subpart from the same State agency, and will take whatever other action that may be appropriate.

(d) The lead agency may require periodic information or data from affected Federal or State agencies.

[54 FR 8928, Mar. 2, 1989; 54 FR 24712, June 9, 1989; 58 FR 26072, Apr. 30, 1993]

APPENDIX A TO PART 24—ADDITIONAL INFORMATION

This appendix provides additional information to explain the intent of certain provisions of this part.

Subpart A—General

Section 24.2 Definitions

Definition of comparable replacement dwelling. The requirement in §24.2 that a comparable replacement dwelling be ''functionally equivalent'' to the displacement dwelling means that it must perform the same function, provide the same utility, and be capable of contributing to a comparable style of living as the displacement dwelling. While it need not possess every feature of the displacement dwelling, the principal features must be present.

For example, if the displacement dwelling contains a pantry and a similar dwelling is not available, a replacement dwelling with ample kitchen cupboards may be acceptable. Insulated and heated space in a garage might prove an adequate substitute for basement workshop space. A dining area may substitute for a separate dining room. Under some circumstances, attic space could substitute for basement space for storage purposes, and vice versa.

Only in unusual circumstances may a comparable replacement dwelling contain fewer rooms or, consequentially, less living space than the displacement dwelling. Such may be the case when a decent, safe, and sanitary replacement dwelling (which by definition is ''adequate to accommodate'' the displaced person) may be found to be ''functionally equivalent'' to a larger but very run-down substandard displacement dwelling.

Paragraph (7) in the definition of *comparable replacement dwelling* requires that a comparable replacement dwelling for a person who is not receiving assistance under any government housing program before displacement must be currently available on the private market without any subsidy under a government housing program.

A public housing unit may qualify as a comparable replacement dwelling only for a person displaced from a public housing unit; a privately-owned dwelling with a housing program subsidy tied to the unit may qualify as a comparable replacement dwelling only

for a person displaced from a similarly subsidized unit or public housing; a housing program subsidy to a person (not tied to the building), such as a HUD Section 8 Existing Housing Program Certificate or a Housing Voucher, may be reflected in an offer of a comparable replacement dwelling to a person receiving a similar subsidy or occupying a privately-owned subsidized unit or public housing unit before displacement.

However, nothing in this part prohibits an Agency from offering, or precludes a person from accepting, assistance under a government housing program, even if the person did not receive similar assistance before displacement. However, the Agency is obligated to inform the person of his or her options under this part. (If a person accepts assistance under a government housing program, the rental assistance payment under §24.402 would be computed on the basis of the person's actual out-of-pocket cost for the replacement housing.)

Persons not displaced. Paragraph (2)(iv) under this definition recognizes that there are circumstances where the acquisition of real property takes place without the intent or necessity that an occupant of the property be permanently displaced. Because such occupants are not considered ''displaced persons'' under this part, great care must be exercised to ensure that they are treated fairly and equitably. For example, if the tenant-occupant of a dwelling will not be displaced, but is required to relocate temporarily in connection with the project, the temporarily-occupied housing must be decent, safe, and sanitary and the tenant must be reimbursed for all reasonable out-of-pocket expenses incurred in connection with the temporary relocation, including moving expenses and increased housing costs during the temporary relocation.

It is also noted that any person who disagrees with the Agency's determination that he or she is not a displaced person under this part may file an appeal in accordance with §24.10.

Initiation of negotiations. This section of the part; provides a special definition for acquisitions and displacements under Public Law 96–510 or Superfund. These activities differ under Superfund in that relocation may precede acquisition, the reverse of the normal sequence. Superfund is a program designed to clean up hazardous waste sites. When such a site is discovered, it may be necessary, in certain limited circumstances, to alert the public to the danger and to the advisability of moving immediately. If a decision is made later to permanently relocate such persons, those who had moved earlier would no longer be on site when a formal, written offer to acquire the property was made and thus would lose their eligibility for a replacement housing payment. In order to prevent this unfair outcome, we have provided a definition which is based on the public health advisory or announcement of permanent relocation.

Section 24.3 No Duplication of Payments

This section prohibits an Agency from making a payment to a person under these regulations that would duplicate another payment the person receives under Federal, State, or local law. The Agency is not required to conduct an exhaustive search for such other payments; it is only required to avoid creating a duplication based on the Agency's knowledge at the time a payment under these regulations is computed.

Section 24.9 Recordkeeping and Reports

Section 24.9(c) Reports. This paragraph allows Federal agencies to require the submission of a report on activities under the Uniform Act no more frequently than once every three years. The report, if required, will cover activities during the Federal fiscal year immediately prior to the submission date. In order to minimize the administrative burden on Agencies implementing this part, a basic report form (see appendix B of this part) has been developed which, with only minor modifications, would be used in all Federal and federally-assisted programs or projects.

Subpart B—Real Property Acquisition

Section 24.101 Applicability of Acquisition Requirements

Section 24.101(b) Less-than-full-fee interest in real property. This provision provides a benchmark beyond which the requirements of the subpart clearly apply to leases. However, the Agency may apply the regulations to any less-than-full-fee acquisition which is short of 50 years but which in its judgment should be covered.

Section 24.102 Basic Acquisition Policies

Section 24.102(d) Establishment of offer of just compensation. The initial offer to the property owner may not be less than the amount of the Agency's approved appraisal, but may exceed that amount if the Agency determines that a greater amount reflects just compensation for the property.

Section 24.102(f) Basic negotiation procedures. It is intended that an offer to an owner be adequately presented, and that the owner be properly informed. Personal, face-to-face contact should take place, if feasible, but this section is not intended to require such contact in all cases.

Section 24.102(i) Administrative settlement. This section provides guidance on administrative settlement as an alternative to judicial resolution of a difference of opinion on the value of a property, in order to avoid unnecessary litigation and congestion in the courts.

All relevant facts and circumstances should be considered by an Agency official delegated this authority. Appraisers, including reviewing appraisers, must not be pressured to adjust their estimate of value for the purpose of justifying such settlements. Such action would invalidate the appraisal process.

Section 24.102(j) Payment before taking possession. It is intended that a right-of-entry for construction purposes be obtained only in the exceptional case, such as an emergency project, when there is no time to make an appraisal and purchase offer and the property owner is agreeable to the process.

Section 24.102(m) Fair rental. Section 301(6) of the Uniform Act limits what an Agency may charge when a former owner or previous occupant of a property is permitted to rent the property for a short term or when occupancy is subject to termination by the Agency on short notice. Such rent may not exceed ''the fair rental value * * * to a short-term occupier.'' Generally, the Agency's right to terminate occupancy on short notice (whether or not the renter also has that right) supports the establishment of a lesser rental than might be found in a longer, fixed-term situation.

Section 24.103 Criteria for Appraisals

Section 24.103(a) Standards of appraisal. In paragraph (a)(3) of this section, it is intended that all relevant and reliable approaches to value be utilized. However, where an Agency determines that the market approach will be adequate by itself because of the type of property being appraised and the availability of sales data, it may limit the appraisal assignment to the market approach.

Section 24.103(b) Influence of the project on just compensation. As used in this section, the term ''project'' is intended to mean an undertaking which is planned, designed, and intended to operate as a unit.

Because of the public knowledge of the proposed project, property values may be affected. A property owner should not be penalized because of a decrease in value caused by the proposed project nor reap a windfall at public expense because of increased value created by the proposed project.

Section 24.103(e) Conflict of interest. The overall objective is to minimize the risk of fraud and mismanagement and to promote public confidence in Federal and federally-assisted land acquisition practices. Recognizing that the costs may outweigh the benefits in some circumstances, §24.103(e) provides that the same person may both appraise and negotiate an acquisition, if the value is $2,500 or less. However, it should be noted that all appraisals must be reviewed in accordance with §24.104. This includes appraisals of real property valued at $2,500, or less.

Section 24.104 Review of appraisals

This section recognizes that Agencies differ in the authority delegated to the review appraiser. In some cases the reviewer establishes the amount of the offer to the owner and in other cases the reviewer makes a recommendation which is acted on at a higher level. It is also within Agency discretion to decide whether a second review is needed if the first review appraiser establishes a value different from that in the appraisal report or reports on a property.

Before acceptance of an appraisal, the review appraiser must determine that the appraiser's documentation, including valuation data and the analyses of that data, demonstrates the soundness of the appraiser's opinion of value. The qualifications of the review appraiser and the level of explanation of the basis for the reviewer's recommended or approved value depend on the complexity of the appraisal problem. For a low value property requiring an uncomplicated valuation process, the reviewer's approval, endorsing the appraiser's report, may satisfy the requirement for the reviewer's statement.

Section 24.106 Expenses Incidental to Transfer of Title to the Agency

Generally, the Agency is able to pay such incidental costs directly and, where feasible, is required to do so. In order to prevent the property owner from making unnecessary out-of-pocket expenditures and to avoid duplication of expenses, the property owner should be informed early in the acquisition process of the Agency's intent to make such arrangements. In addition, it is emphasized that such expenses must be reasonable and necessary.

Subpart C—General Relocation Requirements

Section 24.204 Availability of Comparable Replacement Dwelling Before Displacement

Section 24.204 (a) General. This provision requires that no one may be required to move from a dwelling without one comparable replacement dwelling having been made available. In addition, §24.204(a) requires that, ''Where possible, three or more comparable replacement dwellings shall be made available.'' Thus the basic standard for the number of referrals required under this section is three. Only in situations where three comparable replacement dwellings are not available (e.g., when the local housing market does not contain three comparable dwellings) may the Agency make fewer than three referrals.

Section 24.205 Relocation Assistance Advisory Services

Section 24.205(c)(2)(ii)(C) is intended to emphasize that if the comparable replacement dwellings are located in areas of minority concentration, minority persons should, if possible, also be given opportunities to relocate to replacement dwellings not located in such areas.

Section 24.207 General Requirements—Claims for Relocation Payments

Section 24.207(a) allows an Agency to make a payment for low cost or uncomplicated moves without additional documentation, as long as the payment is limited to the amount of the lowest acceptable bid or estimate, as provided for in §24.303(c).

Subpart D—Payment for Moving and Related Expenses

Section 24.306 Fixed Payment for Moving Expenses—Nonresidential Moves

Section 24.306(d) Nonprofit organizations. Gross revenues may include membership fees, class fees, cash donations, tithes, receipts from sales or other forms of fund collection that enables the non-profit organization to operate. Administrative expenses are those for administrative support such as rent, utilities, salaries, advertising and other like items as well as fundraising expenses. Operating expenses for carrying out the purposes of the non-profit organization are not included in administrative expenses. The monetary receipts and expense amounts may be verified with certified financial statements or financial documents required by public agencies.

Section 24.307 Discretionary Utility Relocation Payments

Section 24.307(c) describes the issues which must be agreed to between the displacing agency and the utility facility owner in determining the amount of the relocation payment. To facilitate and aid in reaching such agreement, the practices in the Federal Highway Administration regulation, 23 CFR part 645, subpart A, Utility Relocations, Adjustments and Reimbursement, should be followed.

Subpart E—Replacement Housing Payments

Section 24.401 Replacement Housing Payment for 180-Day Homeowner-Occupants

Section 24.401(a)(2). The provision for extending eligibility for a replacement housing payment beyond the one year period for good cause means that an extension may be granted if some event beyond the control of the displaced person such as acute or life threatening illness, bad weather preventing the completion of construction of a replacement dwelling or other like circumstances should cause delays in occupying a decent, safe, and sanitary replacement dwelling.

Section 24.401(c) Price differential. The provision in §24.401(c)(4)(iii) to use the current fair market value for residential use does not mean the Agency must have the property appraised. Any reasonable method for arriving at the fair market value may be used.

Section 24.401(d) Increased mortgage interest costs. The provision in §24.401(d) set forth the factors to be used in computing the payment that will be required to reduce a person's replacement mortgage (added to the downpayment) to an amount which can be amortized at the same monthly payment for principal and interest over the same period of time as the remaining term on the displacement mortgages. This payment is commonly known as the ''buydown.''

The remaining principal balance, the interest rate, and monthly principal and interest payments for the old mortgage as well as the interest rate, points and term for the new mortgage must be known to compute the increased mortgage interest costs. If the combination of interest and points for the new mortgage exceeds the current prevailing fixed interest rate and points for conventional mortgages and there is no justification for the excessive rate, then the current prevailing fixed interest rate and points shall be used in the computations. Justification may be the unavailability of the current prevailing rate due to the amount of the new mortgage, credit difficulties, or other similar reasons.

SAMPLE COMPUTATION

Old Mortgage:	
Remaining Principal Balance	$50,000
Monthly Payment (principal and interest)	458.22
Interest rate (percent)	7
New Mortgage:	
Interest rate (percent)	10
Points	3
Term (years)	15

Remaining term of the old mortgage is determined to be 174 months. (Determining, or computing, the actual remaining term is more reliable than using the data supplied by the mortgagee). However, if it is shorter, use the term of the new mortgage and compute the needed monthly payment.

Amount to be financed to maintain monthly payments of $458.22 at 10%—$42,010.18

	$50,000.00
	· 42,010.18
Increased mortgage interest costs	7,989.82

3 points on $42,010.18	1,260.31
Total buydown necessary to maintain payments at $458.22/month	9,250.13

If the new mortgage actually obtained is less than the computed amount for a new mortgage ($42,010.18), the buydown shall be prorated accordingly. If the actual mortgage obtained in our example were $35,000, the buydown payment would be $7,706.57 ($35,000 ÷ by $42,010.18 = .8331; $9,250.13 × .83 = $7,706.57).

The Agency is obligated to inform the person of the approximate amount of this payment and that he or she must obtain a mortgage of at least the same amount as the old mortgage and for at least the same term in order to receive the full amount of this payment. The displacee is also to be advised of the interest rate and points used to calculate the payment.

Section 24.402 Replacement Housing Payment for 90-Day Occupants

The downpayment assistance provisions in §24.402(c) are intended to limit such assistance to the amount of the computed rental assistance payment for a tenant or an eligible homeowner. It does, however, provide the latitude for Agency discretion in offering downpayment assistance which exceeds the computed rental assistance payment, up to the $5,250 statutory maximum. This does not mean, however, that such Agency discretion may be exercised in a selective or discriminatory fashion. The displacing agency should develop a policy which affords equal treatment for persons in like circumstances and this policy should be applied uniformly throughout the Agency's programs or projects. It is recommended that displacing agencies coordinate with each other to reach a consensus on a uniform procedure for the State and/or the local jurisdiction.

For purposes of this section, the term downpayment means the downpayment ordinarily required to obtain conventional loan financing for the decent, safe, and sanitary dwelling actually purchased and occupied. However, if the downpayment actually required of a displaced person for the purchase of the replacement dwelling exceeds the amount ordinarily required, the amount of the downpayment may be the amount which the Agency determines is necessary.

Section 24.403 Additional Rules Governing Replacement Housing Payments

Section 24.403(a)(1). The procedure for adjusting the asking price of comparable replacement dwellings requires that the agency provide advisory assistance to the displaced person concerning negotiations so that he or she may enter the market as a knowledgeable buyer. If a displaced person elects to buy one of the selected comparables, but cannot acquire the property for the adjusted price, it is appropriate to increase the replacement housing payment to the actual purchase amount.

Section 24.404 Replacement Housing of Last Resort

Section 24.404(b) Basic rights of persons to be displaced. This paragraph affirms the right of a 180-day homeowner-occupant, who is eligible for a replacement housing payment under §24.401, to a reasonable opportunity to purchase a comparable replacement dwelling. However, it should be read in conjunction with the definition of ''owner of a dwelling'' at §24.2. The Agency is not required to provide persons owning only a fractional interest in the displacement dwelling a greater level of assistance to purchase a replacement dwelling than the Agency would be required to provide such persons if they owned fee simple title to the displacement dwelling. If such assistance is not sufficient to buy a replacement dwelling, the Agency may provide additional purchase assistance or rental assistance.

Section 24.404(c) Methods of providing comparable replacement housing. The use of cost effective means of providing comparable replacement housing is implied throughout the subpart. The term ''reasonable cost'' is used here to underline the fact that while innovative means to provide housing are encouraged, they should be cost-effective.

Section 24.404(c)(2) permits the use of last resort housing, in special cases, which may involve variations from the usual methods of obtaining comparability. However, it should be specially noted that such variation should never result in a lowering of housing standards nor should it ever result in a lower quality of living style for the displaced person. The physical characteristics of the comparable replacement dwelling may be dissimilar to those of the displacement dwelling but they may never be inferior.

One example might be the use of a new mobile home to replace a very substandard conventional dwelling in an area where comparable conventional dwellings are not available.

Another example could be the use of a superior, but smaller decent, safe and sanitary dwelling to replace a large, old substandard dwelling, only a portion of which is being used as living quarters by the occupants and no other large comparable dwellings are available in the area.

Subpart F—Mobile Homes

Section 24.503 Replacement Housing Payment for 180-Day Mobile Homeowner-Occupants

A 180-day owner-occupant who is displaced from a mobile home on a rented site may be eligible for a replacement housing payment for a dwelling computed under §24.401 and a replacement housing payment for a site computed under §24.402. A 180-day owner-occupant of both the mobile home and the site, who relocates the mobile home, may be eligible for a replacement housing payment under §24.401 to assist in the purchase of a replacement site or, under §24.402, to assist in renting a replacement site.

[54 FR 8928, Mar. 2, 1989; 54 FR 24712, June 9, 1989, as amended at 64 FR 7132, Feb. 12, 1999]

APPENDIX B TO PART 24—STATISTICAL REPORT FORM

This appendix sets forth the statistical information collected from Agencies in accordance with §24.9(c).

General

1. *Report coverage.* This report covers all relocation and real property acquisition activities under a Federal or a federally assisted project or program subject to the provisions of the Uniform Relocation Assistance and Real Property Acquisition Policies Act of 1970, as amended by Public Law 100–17, 101 Stat. 132.

2. *Report period.* Activities shall be reported on a Federal fiscal year basis, i.e., October 1 through September 30.

3. *Where and when to submit report.* Submit an original and two copies of this report to (*Name and Address of Federal Agency*) as soon as possible after September 30, but NOT LATER THAN NOVEMBER 15.

4. *How to report relocation payments.* The full amount of a relocation payment shall be reported as if disbursed in the year during which the claim was approved, regardless of whether the payment is to be paid in installments.

5. *How to report dollar amounts.* Round off all money entries in Parts B and C to the nearest dollar.

6. *Statutory references.* The references in Part B indicate the section of the Uniform Act that authorizes the cost.

Part A. Persons displaced

Report in Part A the number of persons (''households,'' ''businesses, including nonprofit organizations,'' and ''farms'') who were permanently displaced during the fiscal year by project or program activities and moved to their replacement dwelling or location. This includes businesses, nonprofit organizations and farms which, upon displacement, discontinued operations. The category ''households'' includes all families and individuals. A family shall be reported as ''one'' household, *not* by the number of people in the family unit. Persons shall be reported according to their status as ''owners'' or ''tenants'' of the property from which displaced.

Part B. Relocation payments and expenses

Columns (A) and (B). Report in Column (A) the number of displacements during the report year. Report in Column (B) the total amount represented by the displacements reported in Column (A).

Line 7A is a new line item for reporting the business reestablishment expense payment.

Lines 7A and 9, Column (B). Report in Column (B) the amount of costs that were included in the total amount approved on Lines 6 and 8, Column (B).

Lines 12 A and B. Report in Column (A) the number of households displaced by project or program activities which were provided assistance in accordance with section 206(a) of the Uniform Act. Report in Column (B) the total financial assistance under section 206(a) allocable to the households reported in Column (A). (If a household received financial assistance under section 203 or section 204 as well as under section 206(a) of the Uniform Act, report the household as a displacement in Column (A), but in Column (B) report *only* the amount of financial assistance allocable to section 206(a). For example, if a tenant-household receives a payment of $7,000 to rent a replacement dwelling, the sum of $5,250 shall be included on Line 10, Column (B), and $1,750 shall be included on Line 12B, Column (B).)

Line 13. Report on Line 13 all administrative costs incurred during the report year in connection with providing relocation advisory assistance and services under section 205 of the Uniform Act.

Line 15. Report on Line 15 the total number of relocation appeals filed during the fiscal year by aggrieved persons.

Part C. Real property acquisition subject to Uniform Act

Line 16, Columns (A) and (B). Report in Column (A) all parcels acquired during the report year where title or possession was vested in the acquiring agency during the reporting period. (Include parcels acquired without Federal financial assistance, if there was or will be Federal financial assistance in other phases of the project or program.) Report in Column (B) the total of the amounts paid, deposited in court, or otherwise made available to a property owner pursuant to applicable law in order to vest title or possession in the acquiring agency.

Line 17. Report on Line 17 the number of parcels reported on Line 16 that were acquired by condemnation where price disagreement was involved.

UNIFORM RELOCATION ASSISTANCE
AND REAL PROPERTY ACQUISITION
STATISTICAL REPORT FORM

Form Approved
OMB No:
Exp. Date:
Attachment - Appendix B

FEDERAL FISCAL YEAR ENDING SEPT. 30, 19__

REPORTING AGENCY _____

CITY/COUNTY/STATE _____

FEDERAL FUNDING AGENCY _____

The burden for this report is estimated to average hours per response, including reviewing instructions, searching data sources, gathering/maintaining data, and completing/reviewing the report. Send comments to: Federal Highway Administration, Office of Right-of-Way, Washington, D.C. 20590 and to: Office of Management and Budget, Paperwork Reduction Project (2105-0508), Washington, D.C. 20503.

PART A. PERSONS DISPLACED BY ACTIVITIES SUBJECT TO THE UNIFORM ACT DURING THE FISCAL YEAR

ITEM	TOTAL(A)	OWNERS (B)	TENANTS(C)
1. HOUSEHOLDS (FAMILIES & INDIVIDUALS)			
2. BUSINESSES & NONPROFIT ORGANIZATIONS			
3. FARMS			

PART B. RELOCATION PAYMENTS & EXPENSES UNDER THE UNIFORM ACT DURING THE FISCAL YEAR

ITEM		NO. OF DISPLACEMENTS	AMOUNT(B)
4. PAYMENTS FOR MOVING HOUSEHOLDS	ACTUAL EXPENSES-SEC. 202(A)		
5. PAYMENTS FOR MOVING HOUSEHOLDS	SCHEDULE PAYMENT/DISLOCATION ALLOWANCE-SEC. 202(B)		
6. PAYMENTS FOR MOVING BUSINESSES/FARMS/NPO	ACTUAL EXPENSES-SEC 202(A)		
7. PAYMENTS FOR MOVING BUSINESSES/FARMS/NPO	IN LIEU PAYMENTS-SEC. 202(C)		
7A. NO. OF CLAIMS AND AMOUNT ON LINE 6 ATTRIBUTABLE TO REESTABLISHMENT EXPENSES			
8. REPLACEMENT HOUSING PAYMENTS FOR 180-DAY HOMEOWNERS-SEC. 203(A)			
9. NO. OF CLAIMS AND AMOUNT ON LINE 8 ATTRIBUTABLE TO INCREASED MORTGAGE INTEREST COSTS			
10. RENTAL ASSISTANCE PAYMENTS (TENANTS & CERTAIN OTHERS)-SEC. 204(1)			
11. DOWNPAYMENT ASSISTANCE PAYMENTS (TENANTS & CERTAIN OTHERS)-SEC. 204(2)			
12A. HOUSING ASSISTANCE AS LAST RESORT-SEC. 206(A)	OWNERS		
12B. HOUSING ASSISTANCE AS LAST RESORT-SEC. 206(A)	TENANTS		
13. RELOCATION ADVISORY SERVICES COSTS-SEC. 205			
14. TOTAL (SUM OF LINES 4(B) THROUGH 13(B)), EXCLUDING LINES 7A AND 9			
15. RELOCATION GRIEVANCES FILED DURING THE FISCAL YEAR IN CONNECTION WITH PROJECT/PROGRAM			

PART C. REAL PROPERTY ACQUISITION SUBJECT TO THE UNIFORM ACT DURING THE FISCAL YEAR

ITEM	NO. OF PARCELS (A)	COMPENSATION(B)
16. TOTAL PARCELS ACQUIRED		
17. TOTAL PARCELS ACQUIRED BY CONDEMNATION INCLUDED ON LINE 16 WHERE PRICE DISAGREEMENT WAS INVOLVED		

[54 FR 8928, Mar. 2, 1989; 54 FR 24712, June 9, 1989]

PART 25 [RESERVED]

PART 26—PARTICIPATION BY DISADVANTAGED BUSINESS ENTERPRISES IN DEPARTMENT OF TRANSPORTATION FINANCIAL ASSISTANCE PROGRAMS

Subpart A—General

Sec.
26.1 What are the objectives of this part?
26.3 To whom does this part apply?
26.5 What do the terms used in this part mean?
26.7 What discriminatory actions are forbidden?
26.9 How does the Department issue guidance and interpretations under this part?
26.11 What records do recipients keep and report?
26.13 What assurances must recipients and contractors make?
26.15 How can recipients apply for exemptions or waivers?

Subpart B—Administrative Requirements for DBE Programs for Federally-Assisted Contracting

26.21 Who must have a DBE program?
26.23 What is the requirement for a policy statement?
26.25 What is the requirement for a liaison officer?
26.27 What efforts must recipients make concerning DBE financial institutions?
26.29 What prompt payment mechanisms must recipients have?
26.31 What requirements pertain to the DBE directory?
26.33 What steps must a recipient take to address overconcentration of DBEs in certain types of work?
26.35 What role do business development and mentor-protege programs have in the DBE program?
26.37 What are a recipient's responsibilities for monitoring the performance of other program participants?

Subpart C—Goals, Good Faith Efforts, and Counting

26.41 What is the role of the statutory 10 percent goal in this program?
26.43 Can recipients use set-asides or quotas as part of this program?
26.45 How do recipients set overall goals?
26.47 Can recipients be penalized for failing to meet overall goals?
26.49 How are overall goals established for transit vehicle manufacturers?
26.51 What means do recipients use to meet overall goals?
26.53 What are the good faith efforts procedures recipients follow in situations where there are contract goals?
26.55 How is DBE participation counted toward goals?

Subpart D—Certification Standards

26.61 How are burdens of proof allocated in the certification process?
26.63 What rules govern group membership determinations?
26.65 What rules govern business size determinations?
26.67 What rules determine social and economic disadvantage?
26.69 What rules govern determinations of ownership?
26.71 What rules govern determinations concerning control?
26.73 What are other rules affecting certification?

Subpart E—Certification Procedures

26.81 What are the requirements for Unified Certification Programs?
26.83 What procedures do recipients follow in making certification decisions?
26.85 What rules govern recipients' denials of initial requests for certification?
26.87 What procedures does a recipient use to remove a DBE's eligibility?
26.89 What is the process for certification appeals to the Department of Transportation?
26.91 What actions do recipients take following DOT certification appeal decisions?

Subpart F—Compliance and Enforcement

26.101 What compliance procedures apply to recipients?
26.103 What enforcement actions apply in FHWA and FTA programs?
26.105 What enforcement actions apply in FAA programs?
26.107 What enforcement actions apply to firms participating in the DBE program?
26.109 What are the rules governing information, confidentiality, cooperation, and intimidation or retaliation?

APPENDIX A TO PART 26—GUIDANCE CONCERNING GOOD FAITH EFFORTS
APPENDIX B TO PART 26—FORMS [RESERVED]
APPENDIX C TO PART 26—DBE BUSINESS DEVELOPMENT PROGRAM GUIDELINES
APPENDIX D TO PART 26—MENTOR-PROTEGE PROGRAM GUIDELINES
APPENDIX E TO PART 26—INDIVIDUAL DETERMINATIONS OF SOCIAL AND ECONOMIC DISADVANTAGE

AUTHORITY: 23 U.S.C. 324; 42 U.S.C. 2000d, *et seq.*; 49 U.S.C 1615, 47107, 47113, 47123; Sec. 1101(b), Pub. L. 105–178, 112 Stat. 107, 113.

SOURCE: 64 FR 5126, Feb. 2, 1999, unless otherwise noted.

Subpart A—General

§ 26.1 What are the objectives of this part?

This part seeks to achieve several objectives:

(a) To ensure nondiscrimination in the award and administration of DOT-assisted contracts in the Department's highway, transit, and airport financial assistance programs;

(b) To create a level playing field on which DBEs can compete fairly for DOT-assisted contracts;

(c) To ensure that the Department's DBE program is narrowly tailored in accordance with applicable law;

(d) To ensure that only firms that fully meet this part's eligibility standards are permitted to participate as DBEs;

(e) To help remove barriers to the participation of DBEs in DOT-assisted contracts;

(f) To assist the development of firms that can compete successfully in the marketplace outside the DBE program; and

(g) To provide appropriate flexibility to recipients of Federal financial assistance in establishing and providing opportunities for DBEs.

§ 26.3 To whom does this part apply?

(a) If you are a recipient of any of the following types of funds, this part applies to you:

(1) Federal-aid highway funds authorized under Titles I (other than Part B) and V of the Intermodal Surface Transportation Efficiency Act of 1991 (ISTEA), Pub. L. 102–240, 105 Stat. 1914, or Titles I, III, and V of the Transportation Equity Act for the 21st Century (TEA–21), Pub. L. 105–178, 112 Stat. 107.

(2) Federal transit funds authorized by Titles I, III, V and VI of ISTEA, Pub. L. 102–240 or by Federal transit laws in Title 49, U.S. Code, or Titles I, III, and V of the TEA–21, Pub. L. 105–178.

(3) Airport funds authorized by 49 U.S.C. 47101, *et seq.*

(b) [Reserved]

(c) If you are letting a contract, and that contract is to be performed entirely outside the United States, its territories and possessions, Puerto Rico, Guam, or the Northern Marianas Islands, this part does not apply to the contract.

(d) If you are letting a contract in which DOT financial assistance does not participate, this part does not apply to the contract.

26.5 What do the terms used in this part mean?

Affiliation has the same meaning the term has in the Small Business Administration (SBA) regulations, 13 CFR part 121.

(1) Except as otherwise provided in 13 CFR part 121, concerns are affiliates of each other when, either directly or indirectly:

(i) One concern controls or has the power to control the other; or

(ii) A third party or parties controls or has the power to control both; or

(iii) An identity of interest between or among parties exists such that affiliation may be found.

(2) In determining whether affiliation exists, it is necessary to consider all appropriate factors, including common ownership, common management, and contractual relationships. Affiliates must be considered together in determining whether a concern meets small business size criteria and the statutory cap on the participation of firms in the DBE program.

Alaska Native means a citizen of the United States who is a person of one-fourth degree or more Alaskan Indian (including Tsimshian Indians not enrolled in the Metlaktla Indian Community), Eskimo, or Aleut blood, or a combination of those bloodlines. The term includes, in the absence of proof of a minimum blood quantum, any citizen whom a Native village or Native group regards as an Alaska Native if their father or mother is regarded as an Alaska Native.

Alaska Native Corporation (ANC) means any Regional Corporation, Village Corporation, Urban Corporation, or Group Corporation organized under the laws of the State of Alaska in accordance with the Alaska Native Claims Settlement Act, as amended (43 U.S.C. 1601, *et seq.*).

Compliance means that a recipient has correctly implemented the requirements of this part.

Contract means a legally binding relationship obligating a seller to furnish supplies or services (including, but not limited to, construction and professional services) and the buyer to pay for them. For purposes of this part, a lease is considered to be a contract.

Contractor means one who participates, through a contract or subcontract (at any tier), in a DOT-assisted highway, transit, or airport program.

Department or *DOT* means the U.S. Department of Transportation, including the Office of the Secretary, the Federal Highway Administration (FHWA), the Federal Transit Administration (FTA), and the Federal Aviation Administration (FAA).

Disadvantaged business enterprise or *DBE* means a for-profit small business concern—

(1) That is at least 51 percent owned by one or more individuals who are both socially and economically disadvantaged or, in the case of a corporation, in which 51 percent of the stock is owned by one or more such individuals; and

(2) Whose management and daily business operations are controlled by one or more of the socially and economically disadvantaged individuals who own it.

DOT-assisted contract means any contract between a recipient and a contractor (at any tier) funded in whole or in part with DOT financial assistance, including letters of credit or loan guarantees, except a contract solely for the purchase of land.

Good faith efforts means efforts to achieve a DBE goal or other requirement of this part which, by their scope, intensity, and appropriateness to the objective, can reasonably be expected to fulfill the program requirement.

Immediate family member means father, mother, husband, wife, son, daughter, brother, sister, grandmother, grandfather, grandson, granddaughter, mother-in-law, or father-in-law.

Indian tribe means any Indian tribe, band, nation, or other organized group or community of Indians, including any ANC, which is recognized as eligible for the special programs and services provided by the United States to Indians because of their status as Indians, or is recognized as such by the State in which the tribe, band, nation, group, or community resides. See definition of ''tribally-owned concern'' in this section.

Joint venture means an association of a DBE firm and one or more other firms to carry out a single, for-profit business enterprise, for which the parties combine their property, capital, efforts, skills and knowledge, and in which the DBE is responsible for a distinct, clearly defined portion of the work of the contract and whose share in the capital contribution, control, management, risks, and profits of the joint venture are commensurate with its ownership interest.

Native Hawaiian means any individual whose ancestors were natives, prior to 1778, of the area which now comprises the State of Hawaii.

Native Hawaiian Organization means any community service organization serving Native Hawaiians in the State of Hawaii which is a not-for-profit organization chartered by the State of Hawaii, is controlled by Native Hawaiians, and whose business activities will principally benefit such Native Hawaiians.

Noncompliance means that a recipient has not correctly implemented the requirements of this part.

Operating Administration or *OA* means any of the following parts of DOT: the Federal Aviation Administration (FAA), Federal Highway Administration (FHWA), and Federal Transit Administration (FTA). The ''Administrator'' of an operating administration includes his or her designees.

Personal net worth means the net value of the assets of an individual remaining after total liabilities are deducted. An individual's personal net worth does not include: The individual's ownership interest in an applicant or participating DBE firm; or the individual's equity in his or her primary place of residence. An individual's personal net worth includes only his or her own share of assets held jointly or as community property with the individual's spouse.

Primary industry classification means the four digit Standard Industrial Classification (SIC) code designation which best describes the primary business of a firm. The SIC code designations are described in the Standard Industry Classification Manual. As the North American Industrial Classification System (NAICS) replaces the SIC system, references to SIC codes and the SIC Manual are deemed to refer to the NAICS manual and applicable codes. The SIC Manual and the NAICS Manual are available through the National Technical Information Service (NTIS) of the U.S. Department of Commerce (Springfield, VA, 22261). NTIS also makes materials available through its web site (www.ntis.gov/naics).

Primary recipient means a recipient which receives DOT financial assistance and passes some or all of it on to another recipient.

Principal place of business means the business location where the individuals who manage the firm's day-to-day operations spend most working hours and where top management's business records are kept. If the offices from which management is directed and where business records are kept are in different locations, the recipient will determine the principal place of business for DBE program purposes.

Program means any undertaking on a recipient's part to use DOT financial assistance, authorized by the laws to which this part applies.

Race-conscious measure or program is one that is focused specifically on assisting only DBEs, including women-owned DBEs.

Race-neutral measure or program is one that is, or can be, used to assist all small businesses. For the purposes of this part, *race-neutral* includes gender-neutrality.

Recipient is any entity, public or private, to which DOT financial assistance is extended, whether directly or through another recipient, through the programs of the FAA, FHWA, or FTA, or who has applied for such assistance.

Secretary means the Secretary of Transportation or his/her designee.

Set-aside means a contracting practice restricting eligibility for the competitive award of a contract solely to DBE firms.

Small Business Administration or *SBA* means the United States Small Business Administration.

Small business concern means, with respect to firms seeking to participate as DBEs in DOT-assisted contracts, a small business concern as defined pursuant to section 3 of the Small Business Act and Small Business Administration regulations implementing it (13 CFR part 121) that also does not exceed the cap on average annual gross receipts specified in §26.65(b).

Socially and economically disadvantaged individual means any individual who is a citizen (or lawfully admitted permanent resident) of the United States and who is—

(1) Any individual who a recipient finds to be a socially and economically disadvantaged individual on a case-by-case basis.

(2) Any individual in the following groups, members of which are rebuttably presumed to be socially and economically disadvantaged:

(i) ''Black Americans,'' which includes persons having origins in any of the Black racial groups of Africa;

(ii) ''Hispanic Americans,'' which includes persons of Mexican, Puerto Rican, Cuban, Dominican, Central or South American, or other Spanish or Portuguese culture or origin, regardless of race;

(iii) ''Native Americans,'' which includes persons who are American Indians, Eskimos, Aleuts, or Native Hawaiians;

(iv) ''Asian-Pacific Americans,'' which includes persons whose origins are from Japan, China, Taiwan, Korea, Burma (Myanmar), Vietnam, Laos, Cambodia (Kampuchea), Thailand, Malaysia, Indonesia, the Philippines, Brunei, Samoa, Guam, the U.S. Trust Territories of the Pacific Islands (Republic of Palau), the Commonwealth of the Northern Marianas Islands, Macao, Fiji, Tonga, Kirbati, Juvalu, Nauru, Federated States of Micronesia, or Hong Kong;

(v) ''Subcontinent Asian Americans,'' which includes persons whose origins are from India, Pakistan, Bangladesh, Bhutan, the Maldives Islands, Nepal or Sri Lanka;

(vi) Women;

(vii) Any additional groups whose members are designated as socially and economically disadvantaged by the SBA, at such time as the SBA designation becomes effective.

Tribally-owned concern means any concern at least 51 percent owned by an Indian tribe as defined in this section.

You refers to a recipient, unless a statement in the text of this part or the context requires otherwise (i.e., 'You must do XYZ' means that recipients must do XYZ).

[64 FR 5126, Feb. 2, 1999, as amended at 64 FR 34570, June 28, 1999]

§26.7 What discriminatory actions are forbidden?

(a) You must never exclude any person from participation in, deny any person the benefits of, or otherwise discriminate against anyone in connection with the award and performance of any contract covered by this part on the basis of race, color, sex, or national origin.

(b) In administering your DBE program, you must not, directly or through contractual or other arrangements, use criteria or methods of administration that have the effect of defeating or substantially impairing accomplishment of the objectives of the program with respect to individuals of a particular race, color, sex, or national origin.

§26.9 How does the Department issue guidance and interpretations under this part?

(a) This part applies instead of subparts A and C through E of 49 CFR part 23 in effect prior to March 4, 1999. (See 49 CFR Parts 1 to 99, revised as of October 1, 1998.) Only guidance and interpretations (including interpretations set forth in certification appeal decisions) consistent with this part 26 and issued after March 4, 1999 have definitive, binding effect in implementing the provisions of this part and constitute the official position of the Department of Transportation.

(b) The Secretary of Transportation, Office of the Secretary of Transportation, FHWA, FTA, and FAA may issue written interpretations of or written guidance concerning this part. Written interpretations and guidance are valid and binding, and constitute the official position of the Department of Transportation, only if they are issued over the signature of the Secretary of Transportation or if they contain the following statement:

The General Counsel of the Department of Transportation has reviewed this document and approved it as consistent with the language and intent of 49 CFR part 26.

§26.11 What records do recipients keep and report?

(a) [Reserved]

(b) You must continue to provide data about your DBE program to the Department as directed by DOT operating administrations.

(c) You must create and maintain a bidders list, consisting of all firms bidding on prime contracts and bidding or quoting subcontracts on DOT-assisted projects. For every firm, the following information must be included:

(1) Firm name;

(2) Firm address;

(3) Firm's status as a DBE or non-DBE;

(4) The age of the firm; and

(5) The annual gross receipts of the firm.

§26.13 What assurances must recipients and contractors make?

(a) Each financial assistance agreement you sign with a DOT operating administration (or a primary recipient) must include the following assurance:

The recipient shall not discriminate on the basis of race, color, national origin, or sex in the award and performance of any DOT-assisted contract or in the administration of its DBE program or the requirements of 49 CFR part 26. The recipient shall take all necessary and reasonable steps under 49 CFR part 26 to ensure nondiscrimination in the award and administration of DOT-assisted contracts. The recipient's DBE program, as required by 49 CFR part 26 and as approved by DOT, is incorporated by reference in this agreement. Implementation of this program is a legal obligation and failure to carry out its terms shall be treated as a violation of this agreement. Upon notification to the recipient of its failure to carry out its approved program, the Department may impose sanctions as provided for under part 26 and may, in appropriate cases, refer the matter for enforcement under 18 U.S.C. 1001 and/or the Program Fraud Civil Remedies Act of 1986 (31 U.S.C. 3801 *et seq.*).

(b) Each contract you sign with a contractor (and each subcontract the prime contractor signs with a subcontractor) must include the following assurance:

The contractor, sub recipient or subcontractor shall not discriminate on the basis of race, color, national origin, or sex in the performance of this contract. The contractor shall carry out applicable requirements of 49 CFR part 26 in the award and administration of DOT-assisted contracts. Failure by the contractor to carry out these requirements is a material breach of this contract, which may result in the termination of this contract or such other remedy as the recipient deems appropriate.

§ 26.15 How can recipients apply for exemptions or waivers?

(a) You can apply for an exemption from any provision of this part. To apply, you must request the exemption in writing from the Office of the Secretary of Transportation, FHWA, FTA, or FAA. The Secretary will grant the request only if it documents special or exceptional circumstances, not likely to be generally applicable, and not contemplated in connection with the rulemaking that established this part, that make your compliance with a specific provision of this part impractical. You must agree to take any steps that the Department specifies to comply with the intent of the provision from which an exemption is granted. The Secretary will issue a written response to all exemption requests.

(b) You can apply for a waiver of any provision of Subpart B or C of this part including, but not limited to, any provisions regarding administrative requirements, overall goals, contract goals or good faith efforts. Program waivers are for the purpose of authorizing you to operate a DBE program that achieves the objectives of this part by means that may differ from one or more of the requirements of Subpart B or C of this part. To receive a program waiver, you must follow these procedures:

(1) You must apply through the concerned operating administration. The application must include a specific program proposal and address how you will meet the criteria of paragraph (b)(2) of this section. Before submitting your application, you must have had public participation in developing your proposal, including consultation with the DBE community and at least one public hearing. Your application must include a summary of the public participation process and the information gathered through it.

(2) Your application must show that—

(i) There is a reasonable basis to conclude that you could achieve a level of DBE participation consistent with the objectives of this part using different or innovative means other than those that are provided in subpart B or C of this part;

(ii) Conditions in your jurisdiction are appropriate for implementing the proposal;

(iii) Your proposal would prevent discrimination against any individual or group in access to contracting opportunities or other benefits of the program; and

(iv) Your proposal is consistent with applicable law and program requirements of the concerned operating administration's financial assistance program.

(3) The Secretary has the authority to approve your application. If the Secretary grants your application, you may administer your DBE program as provided in your proposal, subject to the following conditions:

(i) DBE eligibility is determined as provided in subparts D and E of this part, and DBE participation is counted as provided in § 26.49;

(ii) Your level of DBE participation continues to be consistent with the objectives of this part;

(iii) There is a reasonable limitation on the duration of your modified program; and

(iv) Any other conditions the Secretary makes on the grant of the waiver.

(4) The Secretary may end a program waiver at any time and require you to comply with this part's provisions. The Secretary may also extend the waiver, if he or she determines that all requirements of paragraphs (b)(2) and (3) of this section continue to be met. Any such extension shall be for no longer than period originally set for the duration of the program.

Subpart B—Administrative Requirements for DBE Programs for Federally-Assisted Contracting

§26.21 Who must have a DBE program?

(a) If you are in one of these categories and let DOT-assisted contracts, you must have a DBE program meeting the requirements of this part:

(1) All FHWA recipients receiving funds authorized by a statute to which this part applies;

(2) FTA recipients that receive $250,000 in FTA planning, capital, and/or operating assistance in a Federal fiscal year, exclusive of transit vehicle purchases, and transit vehicle manufacturers who must submit an overall goal under §26.49;

(3) FAA recipients that receive a grant of $250,000 or more for airport planning or development.

(b)(1) You must submit a DBE program conforming to this part by August 31, 1999 to the concerned operating administration (OA). Once the OA has approved your program, the approval counts for all of your DOT-assisted programs (except that goals are reviewed by the particular operating administration that provides funding for your DOT-assisted contracts).

(2) You do not have to submit regular updates of your DBE programs, as long as you remain in compliance. However, you must submit significant changes in the program for approval.

(c) You are not eligible to receive DOT financial assistance unless DOT has approved your DBE program and you are in compliance with it and this part. You must continue to carry out your program until all funds from DOT financial assistance have been expended.

[64 FR 5126, Feb. 2, 1999, as amended at 64 FR 34570, June 28, 1999]

§26.23 What is the requirement for a policy statement?

You must issue a signed and dated policy statement that expresses your commitment to your DBE program, states its objectives, and outlines responsibilities for its implementation. You must circulate the statement throughout your organization and to the DBE and non-DBE business communities that perform work on your DOT-assisted contracts.

§26.25 What is the requirement for a liaison officer?

You must have a DBE liaison officer, who shall have direct, independent access to your Chief Executive Officer concerning DBE program matters. The liaison officer shall be responsible for implementing all aspects of your DBE program. You must also have adequate staff to administer the program in compliance with this part.

26.27 What efforts must recipients make concerning DBE financial institutions?

You must thoroughly investigate the full extent of services offered by financial institutions owned and controlled by socially and economically disadvantaged individuals in your community and make reasonable efforts to use these institutions. You must also encourage prime contractors to use such institutions.

§26.29 What prompt payment mechanisms must recipients have?

(a) You must establish, as part of your DBE program, a contract clause to require prime contractors to pay subcontractors for satisfactory performance of their contracts no later than a specific number of days from receipt of each payment you make to the prime contractor. This clause must also require the prompt return of retainage payments from the prime contractor to the subcontractor within a specific number of days after the subcontractor's work is satisfactorily completed.

(1) This clause may provide for appropriate penalties for failure to comply, the terms and conditions of which you set.

(2) This clause may also provide that any delay or postponement of payment among the parties may take place only for good cause, with your prior written approval.

(b) You may also establish, as part of your DBE program, any of the following additional mechanisms to ensure prompt payment:

(1) A contract clause that requires prime contractors to include in their subcontracts language providing that prime contractors and subcontractors will use appropriate alternative dispute resolution mechanisms to resolve payment disputes. You may specify the nature of such mechanisms.

(2) A contract clause providing that the prime contractor will not be reimbursed for work performed by subcontractors unless and until the prime contractor ensures that the subcontractors are promptly paid for the work they have performed.

(3) Other mechanisms, consistent with this part and applicable state and local law, to ensure that DBEs and other contractors are fully and promptly paid.

§ 26.31 What requirements pertain to the DBE directory?

You must maintain and make available to interested persons a directory identifying all firms eligible to participate as DBEs in your program. In the listing for each firm, you must include its address, phone number, and the types of work the firm has been certified to perform as a DBE. You must revise your directory at least annually and make updated information available to contractors and the public on request.

§ 26.33 What steps must a recipient take to address overconcentration of DBEs in certain types of work?

(a) If you determine that DBE firms are so overconcentrated in a certain type of work as to unduly burden the opportunity of non-DBE firms to participate in this type of work, you must devise appropriate measures to address this overconcentration.

(b) These measures may include the use of incentives, technical assistance, business development programs, mentor-protege programs, and other appropriate measures designed to assist DBEs in performing work outside of the specific field in which you have determined that non-DBEs are unduly burdened. You may also consider varying your use of contract goals, to the extent consistent with § 26.51, to unsure that non-DBEs are not unfairly prevented from competing for subcontracts.

(c) You must obtain the approval of the concerned DOT operating administration for your determination of overconcentration and the measures you devise to address it. Once approved, the measures become part of your DBE program.

§ 26.35 What role do business development and mentor-protege programs have in the DBE program?

(a) You may or, if an operating administration directs you to, you must establish a DBE business development program (BDP) to assist firms in gaining the ability to compete successfully in the marketplace outside the DBE program. You may require a DBE firm, as a condition of receiving assistance through the BDP, to agree to terminate its participation in the DBE program after a certain time has passed or certain objectives have been reached. See Appendix C of this part for guidance on administering BDP programs.

(b) As part of a BDP or separately, you may establish a ''mentor-protege'' program, in which another DBE or non-DBE firm is the principal source of business development assistance to a DBE firm.

(1) Only firms you have certified as DBEs before they are proposed for participation in a mentor-protege program are eligible to participate in the mentor-protege program.

(2) During the course of the mentor-protege relationship, you must:

(i) Not award DBE credit to a non-DBE mentor firm for using its own protege firm for more than one half of its goal on any contract let by the recipient; and

(ii) Not award DBE credit to a non-DBE mentor firm for using its own protege firm for more than every other contract performed by the protege firm.

(3) For purposes of making determinations of business size under this part, you must not treat protege firms as affiliates of mentor firms, when both firms are participating under an approved mentor-protege program. See Appendix D of this part for guidance concerning the operation of mentor-protege programs.

(c) Your BDPs and mentor-protege programs must be approved by the concerned operating administration before you implement them. Once approved, they become part of your DBE program.

§ 26.37 What are a recipient's responsibilities for monitoring the performance of other program participants?

(a) You must implement appropriate mechanisms to ensure compliance with the part's requirements by all program participants (e.g., applying legal and contract remedies available under Federal, state and local law). You must set forth these mechanisms in your DBE program.

(b) Your DBE program must also include a monitoring and enforcement mechanism to verify that the work committed to DBEs at contract award is actually performed by the DBEs. This mechanism must provide for a running tally of actual DBE attainments (e.g., payments actually made to DBE firms) and include a provision ensuring that DBE participation is credited toward overall or contract goals only when payments are actually made to DBE firms.

Subpart C—Goals, Good Faith Efforts, and Counting

§ 26.41 What is the role of the statutory 10 percent goal in this program?

(a) The statutes authorizing this program provide that, except to the extent the Secretary determines otherwise, not less than 10 percent of the authorized funds are to be expended with DBEs.

(b) This 10 percent goal is an aspirational goal at the national level, which the Department uses as a tool in evaluating and monitoring DBEs' opportunities to participate in DOT-assisted contracts.

(c) The national 10 percent goal does not authorize or require recipients to set overall or contract goals at the 10 percent level, or any other particular level, or to take any special administrative steps if their goals are above or below 10 percent.

§ 26.43 Can recipients use set-asides or quotas as part of this program?

(a) You are not permitted to use quotas for DBEs on DOT-assisted contracts subject to this part.

(b) You may not set-aside contracts for DBEs on DOT-assisted contracts subject to this part, except that, in limited and extreme circumstances, you may use set-asides when no other method could be reasonably expected to redress egregious instances of discrimination.

§ 26.45 How do recipients set overall goals?

(a) You must set an overall goal for DBE participation in your DOT-assisted contracts.

(b) Your overall goal must be based on demonstrable evidence of the availability of ready, willing and able DBEs relative to all businesses ready, willing and able to participate on your DOT-assisted contracts (hereafter, the ''relative availability of DBEs''). The goal must reflect your determination of the level of DBE participation you would expect absent the effects of discrimination. You cannot simply rely on either the 10 percent national goal, your previous overall goal or past DBE participation rates in your program without reference to the relative availability of DBEs in your market.

(c) *Step 1.* You must begin your goal setting process by determining a base figure for the relative availability of DBEs. The following are examples of approaches that you may take toward determining a base figure. These examples are provided as a starting point for your goal setting process. Any percentage figure derived from one of these examples should be considered a basis from which you begin when examining all evidence available in your jurisdiction. These examples are not intended as an exhaustive list. Other methods or combinations of methods to determine a base figure may be used, subject to approval by the concerned operating administration.

(1) *Use DBE Directories and Census Bureau Data.* Determine the number of ready, willing and able DBEs in your market from your DBE directory. Using the Census Bureau's County

Business Pattern (CBP) data base, determine the number of all ready, willing and able businesses available in your market that perform work in the same SIC codes. (Information about the CBP data base may be obtained from the Census Bureau at their web site, www.census.gov/epcd/cbp/view/cbpview.html.) Divide the number of DBEs by the number of all businesses to derive a base figure for the relative availability of DBEs in your market.

(2) *Use a bidders list.* Determine the number of DBEs that have bid or quoted on your DOT-assisted prime contracts or subcontracts in the previous year. Determine the number of all businesses that have bid or quoted on prime or subcontracts in the same time period. Divide the number of DBE bidders and quoters by the number for all businesses to derive a base figure for the relative availability of DBEs in your market.

(3) *Use data from a disparity study.* Use a percentage figure derived from data in a valid, applicable disparity study.

(4) *Use the goal of another DOT recipient.* If another DOT recipient in the same, or substantially similar, market has set an overall goal in compliance with this rule, you may use that goal as a base figure for your goal.

(5) *Alternative methods.* You may use other methods to determine a base figure for your overall goal. Any methodology you choose must be based on demonstrable evidence of local market conditions and be designed to ultimately attain a goal that is rationally related to the relative availability of DBEs in your market.

(d) *Step 2.* Once you have calculated a base figure, you must examine all of the evidence available in your jurisdiction to determine what adjustment, if any, is needed to the base figure in order to arrive at your overall goal.

(1) There are many types of evidence that must be considered when adjusting the base figure. These include:

(i) The current capacity of DBEs to perform work in your DOT-assisted contracting program, as measured by the volume of work DBEs have performed in recent years;

(ii) Evidence from disparity studies conducted anywhere within your jurisdiction, to the extent it is not already accounted for in your base figure; and

(iii) If your base figure is the goal of another recipient, you must adjust it for differences in your local market and your contracting program.

(2) You may also consider available evidence from related fields that affect the opportunities for DBEs to form, grow and compete. These include, but are not limited to:

(i) Statistical disparities in the ability of DBEs to get the financing, bonding and insurance required to participate in your program;

(ii) Data on employment, self-employment, education, training and union apprenticeship programs, to the extent you can relate it to the opportunities for DBEs to perform in your program.

(3) If you attempt to make an adjustment to your base figure to account for the continuing effects of past discrimination (often called the ''but for'' factor) or the effects of an ongoing DBE program, the adjustment must be based on demonstrable evidence that is logically and directly related to the effect for which the adjustment is sought.

(e) Once you have determined a percentage figure in accordance with paragraphs (c) and (d) of this section, you should express your overall goal as follows:

(1) If you are an FHWA recipient, as a percentage of all Federal-aid highway funds you will expend in FHWA-assisted contracts in the forthcoming fiscal year;

(2) If you are an FTA or FAA recipient, as a percentage of all FTA or FAA funds (exclusive of FTA funds to be used for the purchase of transit vehicles) that you will expend in FTA or FAA-assisted contracts in the forthcoming fiscal year. In appropriate cases, the FTA or FAA Administrator may permit you to express your overall goal as a percentage of funds for a particular grant or project or group of grants and/or projects.

(f)(1) If you set overall goals on a fiscal year basis, you must submit them to the applicable DOT operating administration for review on August 1 of each year, unless the Administrator of

the concerned operating administration establishes a different submission date.

(2) If you are an FTA or FAA recipient and set your overall goal on a project or grant basis, you must submit the goal for review at a time determined by the FTA or FAA Administrator.

(3) You must include with your overall goal submission a description of the methodology you used to establish the goal, including your base figure and the evidence with which it was calculated, and the adjustments you made to the base figure and the evidence relied on for the adjustments. You should also include a summary listing of the relevant available evidence in your jurisdiction and, where applicable, an explanation of why you did not use that evidence to adjust your base figure. You must also include your projection of the portions of the overall goal you expect to meet through race-neutral and race-conscious measures, respectively (see §26.51(c)).

(4) You are not required to obtain prior operating administration concurrence with the your overall goal. However, if the operating administration's review suggests that your overall goal has not been correctly calculated, or that your method for calculating goals is inadequate, the operating administration may, after consulting with you, adjust your overall goal or require that you do so. The adjusted overall goal is binding on you.

(5) If you need additional time to collect data or take other steps to develop an approach to setting overall goals, you may request the approval of the concerned operating administration for an interim goal and/or goal-setting mechanism. Such a mechanism must:

(i) Reflect the relative availability of DBEs in your local market to the maximum extent feasible given the data available to you; and

(ii) Avoid imposing undue burdens on non-DBEs.

(g) In establishing an overall goal, you must provide for public participation. This public participation must include:

(1) Consultation with minority, women's and general contractor groups, community organizations, and other officials or organizations which could be expected to have information concerning the availability of disadvantaged and non-disadvantaged businesses, the effects of discrimination on opportunities for DBEs, and your efforts to establish a level playing field for the participation of DBEs.

(2) A published notice announcing your proposed overall goal, informing the public that the proposed goal and its rationale are available for inspection during normal business hours at your principal office for 30 days following the date of the notice, and informing the public that you and the Department will accept comments on the goals for 45 days from the date of the notice. The notice must include addresses to which comments may be sent, and you must publish it in general circulation media and available minority-focused media and trade association publications.

(h) Your overall goals must provide for participation by all certified DBEs and must not be subdivided into group-specific goals.

[64 FR 5126, Feb. 2, 1999, as amended at 64 FR 34570, June 28, 1999]

§26.47 Can recipients be penalized for failing to meet overall goals?

(a) You cannot be penalized, or treated by the Department as being in noncompliance with this rule, because your DBE participation falls short of your overall goal, unless you have failed to administer your program in good faith.

(b) If you do not have an approved DBE program or overall goal, or if you fail to implement your program in good faith, you are in noncompliance with this part.

§26.49 How are overall goals established for transit vehicle manufacturers?

(a) If you are an FTA recipient, you must require in your DBE program that each transit vehicle manufacturer, as a condition of being authorized to bid or propose on FTA-assisted transit vehicle procurements, certify that it has complied with the requirements of this section. You do not include FTA assistance used in transit vehicle procurements in the base

amount from which your overall goal is calculated.

(b) If you are a transit vehicle manufacturer, you must establish and submit for FTA's approval an annual overall percentage goal. In setting your overall goal, you should be guided, to the extent applicable, by the principles underlying § 26.45. The base from which you calculate this goal is the amount of FTA financial assistance included in transit vehicle contracts you will perform during the fiscal year in question. You must exclude from this base funds attributable to work performed outside the United States and its territories, possessions, and commonwealths. The requirements and procedures of this part with respect to submission and approval of overall goals apply to you as they do to recipients.

(c) As a transit vehicle manufacturer, you may make the certification required by this section if you have submitted the goal this section requires and FTA has approved it or not disapproved it.

(d) As a recipient, you may, with FTA approval, establish project-specific goals for DBE participation in the procurement of transit vehicles in lieu of complying through the procedures of this section.

(e) If you are an FHWA or FAA recipient, you may, with FHWA or FAA approval, use the procedures of this section with respect to procurements of vehicles or specialized equipment. If you choose to do so, then the manufacturers of this equipment must meet the same requirements (including goal approval by FHWA or FAA) as transit vehicle manufacturers must meet in FTA-assisted procurements.

§ 26.51 What means do recipients use to meet overall goals?

(a) You must meet the maximum feasible portion of your overall goal by using race-neutral means of facilitating DBE participation. Race-neutral DBE participation includes any time a DBE wins a prime contract through customary competitive procurement procedures, is awarded a subcontract on a prime contract that does not carry a DBE goal, or even if there is a DBE goal, wins a subcontract from a prime contractor that did not consider its DBE status in making the award (e.g., a prime contractor that uses a strict low bid system to award subcontracts).

(b) Race-neutral means include, but are not limited to, the following:

(1) Arranging solicitations, times for the presentation of bids, quantities, specifications, and delivery schedules in ways that facilitate DBE, and other small businesses, participation (e.g., unbundling large contracts to make them more accessible to small businesses, requiring or encouraging prime contractors to subcontract portions of work that they might otherwise perform with their own forces);

(2) Providing assistance in overcoming limitations such as inability to obtain bonding or financing (e.g., by such means as simplifying the bonding process, reducing bonding requirements, eliminating the impact of surety costs from bids, and providing services to help DBEs, and other small businesses, obtain bonding and financing);

(3) Providing technical assistance and other services;

(4) Carrying out information and communications programs on contracting procedures and specific contract opportunities (e.g., ensuring the inclusion of DBEs, and other small businesses, on recipient mailing lists for bidders; ensuring the dissemination to bidders on prime contracts of lists of potential subcontractors; provision of information in languages other than English, where appropriate);

(5) Implementing a supportive services program to develop and improve immediate and long-term business management, record keeping, and financial and accounting capability for DBEs and other small businesses;

(6) Providing services to help DBEs, and other small businesses, improve long-term development, increase opportunities to participate in a variety of kinds of work, handle increasingly significant projects, and achieve eventual self-sufficiency;

(7) Establishing a program to assist new, start-up firms, particularly in fields in which DBE participation has historically been low;

(8) Ensuring distribution of your DBE directory, through print and electronic

means, to the widest feasible universe of potential prime contractors; and

(9) Assisting DBEs, and other small businesses, to develop their capability to utilize emerging technology and conduct business through electronic media.

(c) Each time you submit your overall goal for review by the concerned operating administration, you must also submit your projection of the portion of the goal that you expect to meet through race-neutral means and your basis for that projection. This projection is subject to approval by the concerned operating administration, in conjunction with its review of your overall goal.

(d) You must establish contract goals to meet any portion of your overall goal you do not project being able to meet using race-neutral means.

(e) The following provisions apply to the use of contract goals:

(1) You may use contract goals only on those DOT-assisted contracts that have subcontracting possibilities.

(2) You are not required to set a contract goal on every DOT-assisted contract. You are not required to set each contract goal at the same percentage level as the overall goal. The goal for a specific contract may be higher or lower than that percentage level of the overall goal, depending on such factors as the type of work involved, the location of the work, and the availability of DBEs for the work of the particular contract. However, over the period covered by your overall goal, you must set contract goals so that they will cumulatively result in meeting any portion of your overall goal you do not project being able to meet through the use of race-neutral means.

(3) Operating administration approval of each contract goal is not necessarily required. However, operating administrations may review and approve or disapprove any contract goal you establish.

(4) Your contract goals must provide for participation by all certified DBEs and must not be subdivided into group-specific goals.

(f) To ensure that your DBE program continues to be narrowly tailored to overcome the effects of discrimination, you must adjust your use of contract goals as follows:

(1) If your approved projection under paragraph (c) of this section estimates that you can meet your entire overall goal for a given year through race-neutral means, you must implement your program without setting contract goals during that year.

Example to Paragraph (f)(1): Your overall goal for Year I is 12 percent. You estimate that you can obtain 12 percent or more DBE participation through the use of race-neutral measures, without any use of contract goals. In this case, you do not set any contract goals for the contracts that will be performed in Year I.

(2) If, during the course of any year in which you are using contract goals, you determine that you will exceed your overall goal, you must reduce or eliminate the use of contract goals to the extent necessary to ensure that the use of contract goals does not result in exceeding the overall goal. If you determine that you will fall short of your overall goal, then you must make appropriate modifications in your use of race-neutral and/or race-conscious measures to allow you to meet the overall goal.

Example to Paragraph (f)(2): In Year II, your overall goal is 12 percent. You have estimated that you can obtain 5 percent DBE participation through use of race-neutral measures. You therefore plan to obtain the remaining 7 percent participation through use of DBE goals. By September, you have already obtained 11 percent DBE participation for the year. For contracts let during the remainder of the year, you use contract goals only to the extent necessary to obtain an additional one percent DBE participation. However, if you determine in September that your participation for the year is likely to be only 8 percent total, then you would increase your use of race-neutral and/or race-conscious means during the remainder of the year in order to achieve your overall goal.

(3) If the DBE participation you have obtained by race-neutral means alone meets or exceeds your overall goals for two consecutive years, you are not required to make a projection of the amount of your goal you can meet using such means in the next year. You do not set contract goals on any contracts in the next year. You continue using only race-neutral means to meet your overall goals unless and until you

do not meet your overall goal for a year.

Example to Paragraph (f)(3): Your overall goal for Years I and Year II is 10 percent. The DBE participation you obtain through race-neutral measures alone is 10 percent or more in each year. (For this purpose, it does not matter whether you obtained additional DBE participation through using contract goals in these years.) In Year III and following years, you do not need to make a projection under paragraph (c) of this section of the portion of your overall goal you expect to meet using race-neutral means. You simply use race-neutral means to achieve your overall goals. However, if in Year VI your DBE participation falls short of your overall goal, then you must make a paragraph (c) projection for Year VII and, if necessary, resume use of contract goals in that year.

(4) If you obtain DBE participation that exceeds your overall goal in two consecutive years through the use of contract goals (i.e., not through the use of race-neutral means alone), you must reduce your use of contract goals proportionately in the following year.

Example to Paragraph (f)(4): In Years I and II, your overall goal is 12 percent, and you obtain 14 and 16 percent DBE participation, respectively. You have exceeded your goals over the two-year period by an average of 25 percent. In Year III, your overall goal is again 12 percent, and your paragraph (c) projection estimates that you will obtain 4 percent DBE participation through race-neutral means and 8 percent through contract goals. You then reduce the contract goal projection by 25 percent (i.e., from 8 to 6 percent) and set contract goals accordingly during the year. If in Year III you obtain 11 percent participation, you do not use this contract goal adjustment mechanism for Year IV, because there have not been two *consecutive* years of exceeding overall goals.

(g) In any year in which you project meeting part of your goal through race-neutral means and the remainder through contract goals, you must maintain data separately on DBE achievements in those contracts with and without contract goals, respectively. You must report this data to the concerned operating administration as provided in § 26.11.

§ 26.53 What are the good faith efforts procedures recipients follow in situations where there are contract goals?

(a) When you have established a DBE contract goal, you must award the contract only to a bidder/offeror who makes good faith efforts to meet it. You must determine that a bidder/offeror has made good faith efforts if the bidder/offeror does either of the following things:

(1) Documents that it has obtained enough DBE participation to meet the goal; or

(2) Documents that it made adequate good faith efforts to meet the goal, even though it did not succeed in obtaining enough DBE participation to do so. If the bidder/offeror does document adequate good faith efforts, you must not deny award of the contract on the basis that the bidder/offeror failed to meet the goal. See Appendix A of this part for guidance in determining the adequacy of a bidder/offeror's good faith efforts.

(b) In your solicitations for DOT-assisted contracts for which a contract goal has been established, you must require the following:

(1) Award of the contract will be conditioned on meeting the requirements of this section;

(2) All bidders/offerors will be required to submit the following information to the recipient, at the time provided in paragraph (b)(3) of this section:

(i) The names and addresses of DBE firms that will participate in the contract;

(ii) A description of the work that each DBE will perform;

(iii) The dollar amount of the participation of each DBE firm participating;

(iv) Written documentation of the bidder/offeror's commitment to use a DBE subcontractor whose participation it submits to meet a contract goal;

(v) Written confirmation from the DBE that it is participating in the contract as provided in the prime contractor's commitment; and

(vi) If the contract goal is not met, evidence of good faith efforts (see Appendix A of this part); and

(3) At your discretion, the bidder/offeror must present the information required by paragraph (b)(2) of this section—

(i) Under sealed bid procedures, as a matter of responsiveness, or with initial proposals, under contract negotiation procedures; or

(ii) At any time before you commit yourself to the performance of the contract by the bidder/offeror, as a matter of responsibility.

(c) You must make sure all information is complete and accurate and adequately documents the bidder/offeror's good faith efforts before committing yourself to the performance of the contract by the bidder/offeror.

(d) If you determine that the apparent successful bidder/offeror has failed to meet the requirements of paragraph (a) of this section, you must, before awarding the contract, provide the bidder/offeror an opportunity for administrative reconsideration.

(1) As part of this reconsideration, the bidder/offeror must have the opportunity to provide written documentation or argument concerning the issue of whether it met the goal or made adequate good faith efforts to do so.

(2) Your decision on reconsideration must be made by an official who did not take part in the original determination that the bidder/offeror failed to meet the goal or make adequate good faith efforts to do so.

(3) The bidder/offeror must have the opportunity to meet in person with your reconsideration official to discuss the issue of whether it met the goal or made adequate good faith efforts to do so.

(4) You must send the bidder/offeror a written decision on reconsideration, explaining the basis for finding that the bidder did or did not meet the goal or make adequate good faith efforts to do so.

(5) The result of the reconsideration process is not administratively appealable to the Department of Transportation.

(e) In a ''design-build'' or ''turnkey'' contracting situation, in which the recipient lets a master contract to a contractor, who in turn lets subsequent subcontracts for the work of the project, a recipient may establish a goal for the project. The master contractor then establishes contract goals, as appropriate, for the subcontracts it lets. Recipients must maintain oversight of the master contractor's activities to ensure that they are conducted consistent with the requirements of this part.

(f)(1) You must require that a prime contractor not terminate for convenience a DBE subcontractor listed in response to paragraph (b)(2) of this section (or an approved substitute DBE firm) and then perform the work of the terminated subcontract with its own forces or those of an affiliate, without your prior written consent.

(2) When a DBE subcontractor is terminated, or fails to complete its work on the contract for any reason, you must require the prime contractor to make good faith efforts to find another DBE subcontractor to substitute for the original DBE. These good faith efforts shall be directed at finding another DBE to perform at least the same amount of work under the contract as the DBE that was terminated, to the extent needed to meet the contract goal you established for the procurement.

(3) You must include in each prime contract a provision for appropriate administrative remedies that you will invoke if the prime contractor fails to comply with the requirements of this section.

(g) You must apply the requirements of this section to DBE bidders/offerors for prime contracts. In determining whether a DBE bidder/offeror for a prime contract has met a contract goal, you count the work the DBE has committed to performing with its own forces as well as the work that it has committed to be performed by DBE subcontractors and DBE suppliers.

§ 26.55 How is DBE participation counted toward goals?

(a) When a DBE participates in a contract, you count only the value of the work actually performed by the DBE toward DBE goals.

(1) Count the entire amount of that portion of a construction contract (or

other contract not covered by paragraph (a)(2) of this section) that is performed by the DBE's own forces. Include the cost of supplies and materials obtained by the DBE for the work of the contract, including supplies purchased or equipment leased by the DBE (except supplies and equipment the DBE subcontractor purchases or leases from the prime contractor or its affiliate).

(2) Count the entire amount of fees or commissions charged by a DBE firm for providing a bona fide service, such as professional, technical, consultant, or managerial services, or for providing bonds or insurance specifically required for the performance of a DOT-assisted contract, toward DBE goals, provided you determine the fee to be reasonable and not excessive as compared with fees customarily allowed for similar services.

(3) When a DBE subcontracts part of the work of its contract to another firm, the value of the subcontracted work may be counted toward DBE goals only if the DBE's subcontractor is itself a DBE. Work that a DBE subcontracts to a non-DBE firm does not count toward DBE goals.

(b) When a DBE performs as a participant in a joint venture, count a portion of the total dollar value of the contract equal to the distinct, clearly defined portion of the work of the contract that the DBE performs with its own forces toward DBE goals.

(c) Count expenditures to a DBE contractor toward DBE goals only if the DBE is performing a commercially useful function on that contract.

(1) A DBE performs a commercially useful function when it is responsible for execution of the work of the contract and is carrying out its responsibilities by actually performing, managing, and supervising the work involved. To perform a commercially useful function, the DBE must also be responsible, with respect to materials and supplies used on the contract, for negotiating price, determining quality and quantity, ordering the material, and installing (where applicable) and paying for the material itself. To determine whether a DBE is performing a commercially useful function, you must evaluate the amount of work subcontracted, industry practices, whether the amount the firm is to be paid under the contract is commensurate with the work it is actually performing and the DBE credit claimed for its performance of the work, and other relevant factors.

(2) A DBE does not perform a commercially useful function if its role is limited to that of an extra participant in a transaction, contract, or project through which funds are passed in order to obtain the appearance of DBE participation. In determining whether a DBE is such an extra participant, you must examine similar transactions, particularly those in which DBEs do not participate.

(3) If a DBE does not perform or exercise responsibility for at least 30 percent of the total cost of its contract with its own work force, or the DBE subcontracts a greater portion of the work of a contract than would be expected on the basis of normal industry practice for the type of work involved, you must presume that it is not performing a commercially useful function.

(4) When a DBE is presumed not to be performing a commercially useful function as provided in paragraph (c)(3) of this section, the DBE may present evidence to rebut this presumption. You may determine that the firm is performing a commercially useful function given the type of work involved and normal industry practices.

(5) Your decisions on commercially useful function matters are subject to review by the concerned operating administration, but are not administratively appealable to DOT.

(d) Use the following factors in determining whether a DBE trucking company is performing a commercially useful function:

(1) The DBE must be responsible for the management and supervision of the entire trucking operation for which it is responsible on a particular contract, and there cannot be a contrived arrangement for the purpose of meeting DBE goals.

(2) The DBE must itself own and operate at least one fully licensed, insured, and operational truck used on the contract.

(3) The DBE receives credit for the total value of the transportation services it provides on the contract using trucks it owns, insures, and operates using drivers it employs.

(4) The DBE may lease trucks from another DBE firm, including an owner-operator who is certified as a DBE. The DBE who leases trucks from another DBE receives credit for the total value of the transportation services the lessee DBE provides on the contract.

(5) The DBE may also lease trucks from a non-DBE firm, including an owner-operator. The DBE who leases trucks from a non-DBE is entitled to credit only for the fee or commission it receives as a result of the lease arrangement. The DBE does not receive credit for the total value of the transportation services provided by the lessee, since these services are not provided by a DBE.

(6) For purposes of this paragraph (d), a lease must indicate that the DBE has exclusive use of and control over the truck. This does not preclude the leased truck from working for others during the term of the lease with the consent of the DBE, so long as the lease gives the DBE absolute priority for use of the leased truck. Leased trucks must display the name and identification number of the DBE.

(e) Count expenditures with DBEs for materials or supplies toward DBE goals as provided in the following:

(1)(i) If the materials or supplies are obtained from a DBE manufacturer, count 100 percent of the cost of the materials or supplies toward DBE goals.

(ii) For purposes of this paragraph (e)(1), a manufacturer is a firm that operates or maintains a factory or establishment that produces, on the premises, the materials, supplies, articles, or equipment required under the contract and of the general character described by the specifications.

(2)(i) If the materials or supplies are purchased from a DBE regular dealer, count 60 percent of the cost of the materials or supplies toward DBE goals.

(ii) For purposes of this section, a regular dealer is a firm that owns, operates, or maintains a store, warehouse, or other establishment in which the materials, supplies, articles or equipment of the general character described by the specifications and required under the contract are bought, kept in stock, and regularly sold or leased to the public in the usual course of business.

(A) To be a regular dealer, the firm must be an established, regular business that engages, as its principal business and under its own name, in the purchase and sale or lease of the products in question.

(B) A person may be a regular dealer in such bulk items as petroleum products, steel, cement, gravel, stone, or asphalt without owning, operating, or maintaining a place of business as provided in this paragraph (e)(2)(ii) if the person both owns and operates distribution equipment for the products. Any supplementing of regular dealers' own distribution equipment shall be by a long-term lease agreement and not on an ad hoc or contract-by-contract basis.

(C) Packagers, brokers, manufacturers' representatives, or other persons who arrange or expedite transactions are not regular dealers within the meaning of this paragraph (e)(2).

(3) With respect to materials or supplies purchased from a DBE which is neither a manufacturer nor a regular dealer, count the entire amount of fees or commissions charged for assistance in the procurement of the materials and supplies, or fees or transportation charges for the delivery of materials or supplies required on a job site, toward DBE goals, provided you determine the fees to be reasonable and not excessive as compared with fees customarily allowed for similar services. Do not count any portion of the cost of the materials and supplies themselves toward DBE goals, however.

(f) If a firm is not currently certified as a DBE in accordance with the standards of subpart D of this part at the time of the execution of the contract, do not count the firm's participation toward any DBE goals, except as provided for in §26.87(i)).

(g) Do not count the dollar value of work performed under a contract with a firm after it has ceased to be certified toward your overall goal.

(h) Do not count the participation of a DBE subcontractor toward the prime contractor's DBE achievements or your

overall goal until the amount being counted toward the goal has been paid to the DBE.

Subpart D—Certification Standards

§ 26.61 How are burdens of proof allocated in the certification process?

(a) In determining whether to certify a firm as eligible to participate as a DBE, you must apply the standards of this subpart.

(b) The firm seeking certification has the burden of demonstrating to you, by a preponderance of the evidence, that it meets the requirements of this subpart concerning group membership or individual disadvantage, business size, ownership, and control.

(c) You must rebuttably presume that members of the designated groups identified in § 26.67(a) are socially and economically disadvantaged. This means that they do not have the burden of proving to you that they are socially and economically disadvantaged. However, applicants have the obligation to provide you information concerning their economic disadvantage (see § 26.67).

(d) Individuals who are not presumed to be socially and economically disadvantaged, and individuals concerning whom the presumption of disadvantage has been rebutted, have the burden of proving to you, by a preponderance of the evidence, that they are socially and economically disadvantaged. (See Appendix E of this part.)

(e) You must make determinations concerning whether individuals and firms have met their burden of demonstrating group membership, ownership, control, and social and economic disadvantage (where disadvantage must be demonstrated on an individual basis) by considering all the facts in the record, viewed as a whole.

§ 26.63 What rules govern group membership determinations?

(a) If you have reason to question whether an individual is a member of a group that is presumed to be socially and economically disadvantaged, you must require the individual to demonstrate, by a preponderance of the evidence, that he or she is a member of the group.

(b) In making such a determination, you must consider whether the person has held himself out to be a member of the group over a long period of time prior to application for certification and whether the person is regarded as a member of the group by the relevant community. You may require the applicant to produce appropriate documentation of group membership.

(1) If you determine that an individual claiming to be a member of a group presumed to be disadvantaged is not a member of a designated disadvantaged group, the individual must demonstrate social and economic disadvantage on an individual basis.

(2) Your decisions concerning membership in a designated group are subject to the certification appeals procedure of § 26.89.

§ 26.65 What rules govern business size determinations?

(a) To be an eligible DBE, a firm (including its affiliates) must be an existing small business, as defined by Small Business Administration (SBA) standards. You must apply current SBA business size standard(s) found in 13 CFR part 121 appropriate to the type(s) of work the firm seeks to perform in DOT-assisted contracts.

(b) Even if it meets the requirements of paragraph (a) of this section, a firm is not an eligible DBE in any Federal fiscal year if the firm (including its affiliates) has had average annual gross receipts, as defined by SBA regulations (see 13 CFR 121.402), over the firm's previous three fiscal years, in excess of $16.6 million. The Secretary adjusts this amount for inflation from time to time.

§ 26.67 What rules determine social and economic disadvantage?

(a) *Presumption of disadvantage.* (1) You must rebuttably presume that citizens of the United States (or lawfully admitted permanent residents) who are women, Black Americans, Hispanic Americans, Native Americans, Asian-Pacific Americans, Subcontinent Asian Americans, or other minorities found to be disadvantaged by the SBA,

are socially and economically disadvantaged individuals. You must require applicants to submit a signed, notarized certification that each presumptively disadvantaged owner is, in fact, socially and economically disadvantaged.

(2)(i) You must require each individual owner of a firm applying to participate as a DBE (except a firm applying to participate as a DBE airport concessionaire) whose ownership and control are relied upon for DBE certification to submit a signed, notarized statement of personal net worth, with appropriate supporting documentation. This statement and documentation must not be unduly lengthy, burdensome, or intrusive.

(ii) Notwithstanding any provision of state law, you must not release an individual's personal net worth statement nor any documentation supporting it to any third party without the written consent of the submitter. *Provided*, that you must transmit this information to DOT in any certification appeal proceeding under §26.89 in which the disadvantaged status of the individual is in question.

(iii) In determining net worth, you must exclude an individual's ownership interest in the applicant firm and the individual's equity in his or her primary residence (except any portion of such equity that is attributable to excessive withdrawals from the applicant firm). A contingent liability does not reduce an individual's net worth. The personal net worth of an individual claiming to be an Alaska Native will include assets and income from sources other than an Alaska Native Corporation and exclude any of the following which the individual receives from any Alaska Native Corporation: cash (including cash dividends on stock received from an ANC) to the extent that it does not, in the aggregate, exceed $2,000 per individual per annum; stock (including stock issued or distributed by an ANC as a dividend or distribution on stock); a partnership interest; land or an interest in land (including land or an interest in land received from an ANC as a dividend or distribution on stock); and an interest in a settlement trust.

(b) *Rebuttal of presumption of disadvantage.* (1) If the statement of personal net worth that an individual submits under paragraph (a)(2) of this section shows that the individual's personal net worth exceeds $750,000, the individual's presumption of economic disadvantage is rebutted. You are not required to have a proceeding under paragraph (b)(2) of this section in order to rebut the presumption of economic disadvantage in this case.

(2) If you have a reasonable basis to believe that an individual who is a member of one of the designated groups is not, in fact, socially and/or economically disadvantaged you may, at any time, start a proceeding to determine whether the presumption should be regarded as rebutted with respect to that individual. Your proceeding must follow the procedures of §26.87.

(3) In such a proceeding, you have the burden of demonstrating, by a preponderance of the evidence, that the individual is not socially and economically disadvantaged. You may require the individual to produce information relevant to the determination of his or her disadvantage.

(4) When an individual's presumption of social and/or economic disadvantage has been rebutted, his or her ownership and control of the firm in question cannot be used for purposes of DBE eligibility under this subpart unless and until he or she makes an individual showing of social and/or economic disadvantage. If the basis for rebutting the presumption is a determination that the individual's personal net worth exceeds $750,000, the individual is no longer eligible for participation in the program and cannot regain eligibility by making an individual showing of disadvantage.

(c) *8(a) and SDB Firms.* If a firm applying for certification has a current, valid certification from or recognized by the SBA under the 8(a) or small and disadvantaged business (SDB) program (except an SDB certification based on the firm's self-certification as an SDB), you may accept the firm's 8(a) or SDB certification in lieu of conducting your own certification proceeding, just as you may accept the certification of another DOT recipient for this purpose. You are not required to do so, however.

(d) *Individual determinations of social and economic disadvantage.* Firms owned and controlled by individuals who are not presumed to be socially and economically disadvantaged (including individuals whose presumed disadvantage has been rebutted) may apply for DBE certification. You must make a case-by-case determination of whether each individual whose ownership and control are relied upon for DBE certification is socially and economically disadvantaged. In such a proceeding, the applicant firm has the burden of demonstrating to you, by a preponderance of the evidence, that the individuals who own and control it are socially and economically disadvantaged. An individual whose personal net worth exceeds $750,000 shall not be deemed to be economically disadvantaged. In making these determinations, use the guidance found in Appendix E of this part. You must require that applicants provide sufficient information to permit determinations under the guidance of Appendix E of this part.

[64 FR 5126, Feb. 2, 1999, as amended at 64 FR 34570, June 28, 1999]

§ 26.69 What rules govern determinations of ownership?

(a) In determining whether the socially and economically disadvantaged participants in a firm own the firm, you must consider all the facts in the record, viewed as a whole.

(b) To be an eligible DBE, a firm must be at least 51 percent owned by socially and economically disadvantaged individuals.

(1) In the case of a corporation, such individuals must own at least 51 percent of the each class of voting stock outstanding and 51 percent of the aggregate of all stock outstanding.

(2) In the case of a partnership, 51 percent of each class of partnership interest must be owned by socially and economically disadvantaged individuals. Such ownership must be reflected in the firm's partnership agreement.

(3) In the case of a limited liability company, at least 51 percent of each class of member interest must be owned by socially and economically disadvantaged individuals.

(c) The firm's ownership by socially and economically disadvantaged individuals must be real, substantial, and continuing, going beyond pro forma ownership of the firm as reflected in ownership documents. The disadvantaged owners must enjoy the customary incidents of ownership, and share in the risks and profits commensurate with their ownership interests, as demonstrated by the substance, not merely the form, of arrangements.

(d) All securities that constitute ownership of a firm shall be held directly by disadvantaged persons. Except as provided in this paragraph (d), no securities or assets held in trust, or by any guardian for a minor, are considered as held by disadvantaged persons in determining the ownership of a firm. However, securities or assets held in trust are regarded as held by a disadvantaged individual for purposes of determining ownership of the firm, if—

(1) The beneficial owner of securities or assets held in trust is a disadvantaged individual, and the trustee is the same or another such individual; or

(2) The beneficial owner of a trust is a disadvantaged individual who, rather than the trustee, exercises effective control over the management, policymaking, and daily operational activities of the firm. Assets held in a revocable living trust may be counted only in the situation where the same disadvantaged individual is the sole grantor, beneficiary, and trustee.

(e) The contributions of capital or expertise by the socially and economically disadvantaged owners to acquire their ownership interests must be real and substantial. Examples of insufficient contributions include a promise to contribute capital, an unsecured note payable to the firm or an owner who is not a disadvantaged individual, or mere participation in a firm's activities as an employee. Debt instruments from financial institutions or other organizations that lend funds in the normal course of their business do not render a firm ineligible, even if the debtor's ownership interest is security for the loan.

(f) The following requirements apply to situations in which expertise is relied upon as part of a disadvantaged owner's contribution to acquire ownership:

(1) The owner's expertise must be—

(i) In a specialized field;

(ii) Of outstanding quality;

(iii) In areas critical to the firm's operations;

(iv) Indispensable to the firm's potential success;

(v) Specific to the type of work the firm performs; and

(vi) Documented in the records of the firm. These records must clearly show the contribution of expertise and its value to the firm.

(2) The individual whose expertise is relied upon must have a significant financial investment in the firm.

(g) You must always deem as held by a socially and economically disadvantaged individual, for purposes of determining ownership, all interests in a business or other assets obtained by the individual—

(1) As the result of a final property settlement or court order in a divorce or legal separation, provided that no term or condition of the agreement or divorce decree is inconsistent with this section; or

(2) Through inheritance, or otherwise because of the death of the former owner.

(h)(1) You must presume as not being held by a socially and economically disadvantaged individual, for purposes of determining ownership, all interests in a business or other assets obtained by the individual as the result of a gift, or transfer without adequate consideration, from any non-disadvantaged individual or non-DBE firm who is—

(i) Involved in the same firm for which the individual is seeking certification, or an affiliate of that firm;

(ii) Involved in the same or a similar line of business; or

(iii) Engaged in an ongoing business relationship with the firm, or an affiliate of the firm, for which the individual is seeking certification.

(2) To overcome this presumption and permit the interests or assets to be counted, the disadvantaged individual must demonstrate to you, by clear and convincing evidence, that—

(i) The gift or transfer to the disadvantaged individual was made for reasons other than obtaining certification as a DBE; and

(ii) The disadvantaged individual actually controls the management, policy, and operations of the firm, notwithstanding the continuing participation of a non-disadvantaged individual who provided the gift or transfer.

(i) You must apply the following rules in situations in which marital assets form a basis for ownership of a firm:

(1) When marital assets (other than the assets of the business in question), held jointly or as community property by both spouses, are used to acquire the ownership interest asserted by one spouse, you must deem the ownership interest in the firm to have been acquired by that spouse with his or her own individual resources, provided that the other spouse irrevocably renounces and transfers all rights in the ownership interest in the manner sanctioned by the laws of the state in which either spouse or the firm is domiciled. You do not count a greater portion of joint or community property assets toward ownership than state law would recognize as belonging to the socially and economically disadvantaged owner of the applicant firm.

(2) A copy of the document legally transferring and renouncing the other spouse's rights in the jointly owned or community assets used to acquire an ownership interest in the firm must be included as part of the firm's application for DBE certification.

(j) You may consider the following factors in determining the ownership of a firm. However, you must not regard a contribution of capital as failing to be real and substantial, or find a firm ineligible, solely because—

(1) A socially and economically disadvantaged individual acquired his or her ownership interest as the result of a gift, or transfer without adequate consideration, other than the types set forth in paragraph (h) of this section;

(2) There is a provision for the co-signature of a spouse who is not a socially and economically disadvantaged individual on financing agreements, contracts for the purchase or sale of real or personal property, bank signature cards, or other documents; or

(3) Ownership of the firm in question or its assets is transferred for adequate consideration from a spouse who is not a socially and economically disadvantaged individual to a spouse who is

such an individual. In this case, you must give particularly close and careful scrutiny to the ownership and control of a firm to ensure that it is owned and controlled, in substance as well as in form, by a socially and economically disadvantaged individual.

§ 26.71 What rules govern determinations concerning control?

(a) In determining whether socially and economically disadvantaged owners control a firm, you must consider all the facts in the record, viewed as a whole.

(b) Only an independent business may be certified as a DBE. An independent business is one the viability of which does not depend on its relationship with another firm or firms.

(1) In determining whether a potential DBE is an independent business, you must scrutinize relationships with non-DBE firms, in such areas as personnel, facilities, equipment, financial and/or bonding support, and other resources.

(2) You must consider whether present or recent employer/employee relationships between the disadvantaged owner(s) of the potential DBE and non-DBE firms or persons associated with non-DBE firms compromise the independence of the potential DBE firm.

(3) You must examine the firm's relationships with prime contractors to determine whether a pattern of exclusive or primary dealings with a prime contractor compromises the independence of the potential DBE firm.

(4) In considering factors related to the independence of a potential DBE firm, you must consider the consistency of relationships between the potential DBE and non-DBE firms with normal industry practice.

(c) A DBE firm must not be subject to any formal or informal restrictions which limit the customary discretion of the socially and economically disadvantaged owners. There can be no restrictions through corporate charter provisions, by-law provisions, contracts or any other formal or informal devices (e.g., cumulative voting rights, voting powers attached to different classes of stock, employment contracts, requirements for concurrence by non-disadvantaged partners, conditions precedent or subsequent, executory agreements, voting trusts, restrictions on or assignments of voting rights) that prevent the socially and economically disadvantaged owners, without the cooperation or vote of any non-disadvantaged individual, from making any business decision of the firm. This paragraph does not preclude a spousal co-signature on documents as provided for in § 26.69(j)(2).

(d) The socially and economically disadvantaged owners must possess the power to direct or cause the direction of the management and policies of the firm and to make day-to-day as well as long-term decisions on matters of management, policy and operations.

(1) A disadvantaged owner must hold the highest officer position in the company (e.g., chief executive officer or president).

(2) In a corporation, disadvantaged owners must control the board of directors.

(3) In a partnership, one or more disadvantaged owners must serve as general partners, with control over all partnership decisions.

(e) Individuals who are not socially and economically disadvantaged may be involved in a DBE firm as owners, managers, employees, stockholders, officers, and/or directors. Such individuals must not, however, possess or exercise the power to control the firm, or be disproportionately responsible for the operation of the firm.

(f) The socially and economically disadvantaged owners of the firm may delegate various areas of the management, policymaking, or daily operations of the firm to other participants in the firm, regardless of whether these participants are socially and economically disadvantaged individuals. Such delegations of authority must be revocable, and the socially and economically disadvantaged owners must retain the power to hire and fire any person to whom such authority is delegated. The managerial role of the socially and economically disadvantaged owners in the firm's overall affairs must be such that the recipient can reasonably conclude that the socially and economically disadvantaged owners actually exercise control over the

firm's operations, management, and policy.

(g) The socially and economically disadvantaged owners must have an overall understanding of, and managerial and technical competence and experience directly related to, the type of business in which the firm is engaged and the firm's operations. The socially and economically disadvantaged owners are not required to have experience or expertise in every critical area of the firm's operations, or to have greater experience or expertise in a given field than managers or key employees. The socially and economically disadvantaged owners must have the ability to intelligently and critically evaluate information presented by other participants in the firm's activities and to use this information to make independent decisions concerning the firm's daily operations, management, and policymaking. Generally, expertise limited to office management, administration, or bookkeeping functions unrelated to the principal business activities of the firm is insufficient to demonstrate control.

(h) If state or local law requires the persons to have a particular license or other credential in order to own and/or control a certain type of firm, then the socially and economically disadvantaged persons who own and control a potential DBE firm of that type must possess the required license or credential. If state or local law does not require such a person to have such a license or credential to own and/or control a firm, you must not deny certification solely on the ground that the person lacks the license or credential. However, you may take into account the absence of the license or credential as one factor in determining whether the socially and economically disadvantaged owners actually control the firm.

(i)(1) You may consider differences in remuneration between the socially and economically disadvantaged owners and other participants in the firm in determining whether to certify a firm as a DBE. Such consideration shall be in the context of the duties of the persons involved, normal industry practices, the firm's policy and practice concerning reinvestment of income, and any other explanations for the differences proffered by the firm. You may determine that a firm is controlled by its socially and economically disadvantaged owner although that owner's remuneration is lower than that of some other participants in the firm.

(2) In a case where a non-disadvantaged individual formerly controlled the firm, and a socially and economically disadvantaged individual now controls it, you may consider a difference between the remuneration of the former and current controller of the firm as a factor in determining who controls the firm, particularly when the non-disadvantaged individual remains involved with the firm and continues to receive greater compensation than the disadvantaged individual.

(j) In order to be viewed as controlling a firm, a socially and economically disadvantaged owner cannot engage in outside employment or other business interests that conflict with the management of the firm or prevent the individual from devoting sufficient time and attention to the affairs of the firm to control its activities. For example, absentee ownership of a business and part-time work in a full-time firm are not viewed as constituting control. However, an individual could be viewed as controlling a part-time business that operates only on evenings and/or weekends, if the individual controls it all the time it is operating.

(k)(1) A socially and economically disadvantaged individual may control a firm even though one or more of the individual's immediate family members (who themselves are not socially and economically disadvantaged individuals) participate in the firm as a manager, employee, owner, or in another capacity. Except as otherwise provided in this paragraph, you must make a judgment about the control the socially and economically disadvantaged owner exercises vis-a-vis other persons involved in the business as you do in other situations, without regard to whether or not the other persons are immediate family members.

(2) If you cannot determine that the socially and economically disadvantaged owners—as distinct from the

family as a whole—control the firm, then the socially and economically disadvantaged owners have failed to carry their burden of proof concerning control, even though they may participate significantly in the firm's activities.

(l) Where a firm was formerly owned and/or controlled by a non-disadvantaged individual (whether or not an immediate family member), ownership and/or control were transferred to a socially and economically disadvantaged individual, and the non-disadvantaged individual remains involved with the firm in any capacity, the disadvantaged individual now owning the firm must demonstrate to you, by clear and convincing evidence, that:

(1) The transfer of ownership and/or control to the disadvantaged individual was made for reasons other than obtaining certification as a DBE; and

(2) The disadvantaged individual actually controls the management, policy, and operations of the firm, notwithstanding the continuing participation of a non-disadvantaged individual who formerly owned and/or controlled the firm.

(m) In determining whether a firm is controlled by its socially and economically disadvantaged owners, you may consider whether the firm owns equipment necessary to perform its work. However, you must not determine that a firm is not controlled by socially and economically disadvantaged individuals solely because the firm leases, rather than owns, such equipment, where leasing equipment is a normal industry practice and the lease does not involve a relationship with a prime contractor or other party that compromises the independence of the firm.

(n) You must grant certification to a firm only for specific types of work in which the socially and economically disadvantaged owners have the ability to control the firm. To become certified in an additional type of work, the firm need demonstrate to you only that its socially and economically disadvantaged owners are able to control the firm with respect to that type of work. You may not, in this situation, require that the firm be recertified or submit a new application for certification, but you must verify the disadvantaged owner's control of the firm in the additional type of work.

(o) A business operating under a franchise or license agreement may be certified if it meets the standards in this subpart and the franchiser or licenser is not affiliated with the franchisee or licensee. In determining whether affiliation exists, you should generally not consider the restraints relating to standardized quality, advertising, accounting format, and other provisions imposed on the franchisee or licensee by the franchise agreement or license, provided that the franchisee or licensee has the right to profit from its efforts and bears the risk of loss commensurate with ownership. Alternatively, even though a franchisee or licensee may not be controlled by virtue of such provisions in the franchise agreement or license, affiliation could arise through other means, such as common management or excessive restrictions on the sale or transfer of the franchise interest or license.

(p) In order for a partnership to be controlled by socially and economically disadvantaged individuals, any non-disadvantaged partners must not have the power, without the specific written concurrence of the socially and economically disadvantaged partner(s), to contractually bind the partnership or subject the partnership to contract or tort liability.

(q) The socially and economically disadvantaged individuals controlling a firm may use an employee leasing company. The use of such a company does not preclude the socially and economically disadvantaged individuals from controlling their firm if they continue to maintain an employer-employee relationship with the leased employees. This includes being responsible for hiring, firing, training, assigning, and otherwise controlling the on-the-job activities of the employees, as well as ultimate responsibility for wage and tax obligations related to the employees.

§ 26.73 What are other rules affecting certification?

(a)(1) Consideration of whether a firm performs a commercially useful function or is a regular dealer pertains solely to counting toward DBE goals

the participation of firms that have already been certified as DBEs. Except as provided in paragraph (a)(2) of this section, you must not consider commercially useful function issues in any way in making decisions about whether to certify a firm as a DBE.

(2) You may consider, in making certification decisions, whether a firm has exhibited a pattern of conduct indicating its involvement in attempts to evade or subvert the intent or requirements of the DBE program.

(b) You must evaluate the eligibility of a firm on the basis of present circumstances. You must not refuse to certify a firm based solely on historical information indicating a lack of ownership or control of the firm by socially and economically disadvantaged individuals at some time in the past, if the firm currently meets the ownership and control standards of this part. Nor must you refuse to certify a firm solely on the basis that it is a newly formed firm.

(c) DBE firms and firms seeking DBE certification shall cooperate fully with your requests (and DOT requests) for information relevant to the certification process. Failure or refusal to provide such information is a ground for a denial or removal of certification.

(d) Only firms organized for profit may be eligible DBEs. Not-for-profit organizations, even though controlled by socially and economically disadvantaged individuals, are not eligible to be certified as DBEs.

(e) An eligible DBE firm must be owned by individuals who are socially and economically disadvantaged. Except as provided in this paragraph, a firm that is not owned by such individuals, but instead is owned by another firm—even a DBE firm—cannot be an eligible DBE.

(1) If socially and economically disadvantaged individuals own and control a firm through a parent or holding company, established for tax, capitalization or other purposes consistent with industry practice, and the parent or holding company in turn owns and controls an operating subsidiary, you may certify the subsidiary if it otherwise meets all requirements of this subpart. In this situation, the individual owners and controllers of the parent or holding company are deemed to control the subsidiary through the parent or holding company.

(2) You may certify such a subsidiary only if there is cumulatively 51 percent ownership of the subsidiary by socially and economically disadvantaged individuals. The following examples illustrate how this cumulative ownership provision works:

Example 1: Socially and economically disadvantaged individuals own 100 percent of a holding company, which has a wholly-owned subsidiary. The subsidiary may be certified, if it meets all other requirements.

Example 2: Disadvantaged individuals own 100 percent of the holding company, which owns 51 percent of a subsidiary. The subsidiary may be certified, if all other requirements are met.

Example 3: Disadvantaged individuals own 80 percent of the holding company, which in turn owns 70 percent of a subsidiary. In this case, the cumulative ownership of the subsidiary by disadvantaged individuals is 56 percent (80 percent of the 70 percent). This is more than 51 percent, so you may certify the subsidiary, if all other requirements are met.

Example 4: Same as Example 2 or 3, but someone other than the socially and economically disadvantaged owners of the parent or holding company controls the subsidiary. Even though the subsidiary is owned by disadvantaged individuals, through the holding or parent company, you cannot certify it because it fails to meet control requirements.

Example 5: Disadvantaged individuals own 60 percent of the holding company, which in turn owns 51 percent of a subsidiary. In this case, the cumulative ownership of the subsidiary by disadvantaged individuals is about 31 percent. This is less than 51 percent, so you cannot certify the subsidiary.

Example 6: The holding company, in addition to the subsidiary seeking certification, owns several other companies. The combined gross receipts of the holding companies and its subsidiaries are greater than the size standard for the subsidiary seeking certification and/or the gross receipts cap of §26.65(b). Under the rules concerning affiliation, the subsidiary fails to meet the size standard and cannot be certified.

(f) Recognition of a business as a separate entity for tax or corporate purposes is not necessarily sufficient to demonstrate that a firm is an independent business, owned and controlled by socially and economically disadvantaged individuals.

(g) You must not require a DBE firm to be prequalified as a condition for

certification unless the recipient requires all firms that participate in its contracts and subcontracts to be prequalified.

(h) A firm that is owned by an Indian tribe, Alaska Native Corporation, or Native Hawaiian organization as an entity, rather than by Indians, Alaska Natives, or Native Hawaiians as individuals, may be eligible for certification. Such a firm must meet the size standards of § 26.65. Such a firm must be controlled by socially and economically disadvantaged individuals, as provided in § 26.71.

Subpart E—Certification Procedures

§ 26.81 What are the requirements for Unified Certification Programs?

(a) You and all other DOT recipients in your state must participate in a Unified Certification Program (UCP).

(1) Within three years of March 4, 1999, you and the other recipients in your state must sign an agreement establishing the UCP for that state and submit the agreement to the Secretary for approval. The Secretary may, on the basis of extenuating circumstances shown by the recipients in the state, extend this deadline for no more than one additional year.

(2) The agreement must provide for the establishment of a UCP meeting all the requirements of this section. The agreement must specify that the UCP will follow all certification procedures and standards of this part, on the same basis as recipients; that the UCP shall cooperate fully with oversight, review, and monitoring activities of DOT and its operating administrations; and that the UCP shall implement DOT directives and guidance concerning certification matters. The agreement shall also commit recipients to ensuring that the UCP has sufficient resources and expertise to carry out the requirements of this part. The agreement shall include an implementation schedule ensuring that the UCP is fully operational no later than 18 months following the approval of the agreement by the Secretary.

(3) Subject to approval by the Secretary, the UCP in each state may take any form acceptable to the recipients in that state.

(4) The Secretary shall review the UCP and approve it, disapprove it, or remand it to the recipients in the state for revisions. A complete agreement which is not disapproved or remanded within 180 days of its receipt is deemed to be accepted.

(5) If you and the other recipients in your state fail to meet the deadlines set forth in this paragraph (a), you shall have the opportunity to make an explanation to the Secretary why a deadline could not be met and why meeting the deadline was beyond your control. If you fail to make such an explanation, or the explanation does not justify the failure to meet the deadline, the Secretary shall direct you to complete the required action by a date certain. If you and the other recipients fail to carry out this direction in a timely manner, you are collectively in noncompliance with this part.

(b) The UCP shall make all certification decisions on behalf of all DOT recipients in the state with respect to participation in the DOT DBE Program.

(1) Certification decisions by the UCP shall be binding on all DOT recipients within the state.

(2) The UCP shall provide ‘‘one-stop shopping’’ to applicants for certification, such that an applicant is required to apply only once for a DBE certification that will be honored by all recipients in the state.

(3) All obligations of recipients with respect to certification and nondiscrimination must be carried out by UCPs, and recipients may use only UCPs that comply with the certification and nondiscrimination requirements of this part.

(c) All certifications by UCPs shall be pre-certifications; i.e., certifications that have been made final before the due date for bids or offers on a contract on which a firm seeks to participate as a DBE.

(d) A UCP is not required to process an application for certification from a firm having its principal place of business outside the state if the firm is not certified by the UCP in the state in which it maintains its principal place of business. The ‘‘home state’’ UCP

shall share its information and documents concerning the firm with other UCPs that are considering the firm's application.

(e) Subject to DOT approval as provided in this section, the recipients in two or more states may form a regional UCP. UCPs may also enter into written reciprocity agreements with other UCPs. Such an agreement shall outline the specific responsibilities of each participant. A UCP may accept the certification of any other UCP or DOT recipient.

(f) Pending the establishment of UCPs meeting the requirements of this section, you may enter into agreements with other recipients, on a regional or inter-jurisdictional basis, to perform certification functions required by this part. You may also grant reciprocity to other recipient's certification decisions.

(g) Each UCP shall maintain a unified DBE directory containing, for all firms certified by the UCP (including those from other states certified under the provisions of this section), the information required by §26.31. The UCP shall make the directory available to the public electronically, on the internet, as well as in print. The UCP shall update the electronic version of the directory by including additions, deletions, and other changes as soon as they are made.

(h) Except as otherwise specified in this section, all provisions of this subpart and subpart D of this part pertaining to recipients also apply to UCPs.

§26.83 What procedures do recipients follow in making certification decisions?

(a) You must ensure that only firms certified as eligible DBEs under this section participate as DBEs in your program.

(b) You must determine the eligibility of firms as DBEs consistent with the standards of subpart D of this part. When a UCP is formed, the UCP must meet all the requirements of subpart D of this part and this subpart that recipients are required to meet.

(c) You must take all the following steps in determining whether a DBE firm meets the standards of subpart D of this part:

(1) Perform an on-site visit to the offices of the firm. You must interview the principal officers of the firm and review their resumes and/or work histories. You must also perform an on-site visit to job sites if there are such sites on which the firm is working at the time of the eligibility investigation in your jurisdiction or local area. You may rely upon the site visit report of any other recipient with respect to a firm applying for certification;

(2) If the firm is a corporation, analyze the ownership of stock in the firm;

(3) Analyze the bonding and financial capacity of the firm;

(4) Determine the work history of the firm, including contracts it has received and work it has completed;

(5) Obtain a statement from the firm of the type of work it prefers to perform as part of the DBE program and its preferred locations for performing the work, if any;

(6) Obtain or compile a list of the equipment owned by or available to the firm and the licenses the firm and its key personnel possess to perform the work it seeks to do as part of the DBE program;

(7) Require potential DBEs to complete and submit an appropriate application form.

(i) *Uniform form.* [Reserved]

(ii) You must make sure that the applicant attests to the accuracy and truthfulness of the information on the application form. This shall be done either in the form of an affidavit sworn to by the applicant before a person who is authorized by state law to administer oaths or in the form of an unsworn declaration executed under penalty of perjury of the laws of the United States.

(iii) You must review all information on the form prior to making a decision about the eligibility of the firm.

(d) When another recipient, in connection with its consideration of the eligibility of a firm, makes a written request for certification information you have obtained about that firm (e.g., including application materials or the report of a site visit, if you have made one to the firm), you must

promptly make the information available to the other recipient.

(e) When another DOT recipient has certified a firm, you have discretion to take any of the following actions:

(1) Certify the firm in reliance on the certification decision of the other recipient;

(2) Make an independent certification decision based on documentation provided by the other recipient, augmented by any additional information you require the applicant to provide; or

(3) Require the applicant to go through your application process without regard to the action of the other recipient.

(f) Subject to the approval of the concerned operating administration as part of your DBE program, you may impose a reasonable application fee for certification. Fee waivers shall be made in appropriate cases.

(g) You must safeguard from disclosure to unauthorized persons information gathered as part of the certification process that may reasonably be regarded as proprietary or other confidential business information, consistent with applicable Federal, state, and local law.

(h) Once you have certified a DBE, it shall remain certified for a period of at least three years unless and until its certification has been removed through the procedures of § 26.87. You may not require DBEs to reapply for certification as a condition of continuing to participate in the program during this three-year period, unless the factual basis on which the certification was made changes.

(i) If you are a DBE, you must inform the recipient or UCP in writing of any change in circumstances affecting your ability to meet size, disadvantaged status, ownership, or control requirements of this part or any material change in the information provided in your application form.

(1) Changes in management responsibility among members of a limited liability company are covered by this requirement.

(2) You must attach supporting documentation describing in detail the nature of such changes.

(3) The notice must take the form of an affidavit sworn to by the applicant before a person who is authorized by state law to administer oaths or of an unsworn declaration executed under penalty of perjury of the laws of the United States. You must provide the written notification within 30 days of the occurrence of the change. If you fail to make timely notification of such a change, you will be deemed to have failed to cooperate under § 26.109(c).

(j) If you are a DBE, you must provide to the recipient, every year on the anniversary of the date of your certification, an affidavit sworn to by the firm's owners before a person who is authorized by state law to administer oaths or an unsworn declaration executed under penalty of perjury of the laws of the United States. This affidavit must affirm that there have been no changes in the firm's circumstances affecting its ability to meet size, disadvantaged status, ownership, or control requirements of this part or any material changes in the information provided in its application form, except for changes about which you have notified the recipient under paragraph (i) of this section. The affidavit shall specifically affirm that your firm continues to meet SBA business size criteria and the overall gross receipts cap of this part, documenting this affirmation with supporting documentation of your firm's size and gross receipts. If you fail to provide this affidavit in a timely manner, you will be deemed to have failed to cooperate under § 26.109(c).

(k) If you are a recipient, you must make decisions on applications for certification within 90 days of receiving from the applicant firm all information required under this part. You may extend this time period once, for no more than an additional 60 days, upon written notice to the firm, explaining fully and specifically the reasons for the extension. You may establish a different time frame in your DBE program, upon a showing that this time frame is not feasible, and subject to the approval of the concerned operating administration. Your failure to make a decision by the applicable deadline under this paragraph is deemed a constructive denial of the application, on the basis of

which the firm may appeal to DOT under §26.89.

§26.85 What rules govern recipients' denials of initial requests for certification?

(a) When you deny a request by a firm, which is not currently certified with you, to be certified as a DBE, you must provide the firm a written explanation of the reasons for the denial, specifically referencing the evidence in the record that supports each reason for the denial. All documents and other information on which the denial is based must be made available to the applicant, on request.

(b) When a firm is denied certification, you must establish a time period of no more than twelve months that must elapse before the firm may reapply to the recipient for certification. You may provide, in your DBE program, subject to approval by the concerned operating administration, a shorter waiting period for reapplication. The time period for reapplication begins to run on the date the explanation required by paragraph (a) of this section is received by the firm.

(c) When you make an administratively final denial of certification concerning a firm, the firm may appeal the denial to the Department under §26.89.

§26.87 What procedures does a recipient use to remove a DBE's eligibility?

(a) *Ineligibility complaints.* (1) Any person may file with you a written complaint alleging that a currently-certified firm is ineligible and specifying the alleged reasons why the firm is ineligible. You are not required to accept a general allegation that a firm is ineligible or an anonymous complaint. The complaint may include any information or arguments supporting the complainant's assertion that the firm is ineligible and should not continue to be certified. Confidentiality of complainants' identities must be protected as provided in §26.109(b).

(2) You must review your records concerning the firm, any material provided by the firm and the complainant, and other available information. You may request additional information from the firm or conduct any other investigation that you deem necessary.

(3) If you determine, based on this review, that there is reasonable cause to believe that the firm is ineligible, you must provide written notice to the firm that you propose to find the firm ineligible, setting forth the reasons for the proposed determination. If you determine that such reasonable cause does not exist, you must notify the complainant and the firm in writing of this determination and the reasons for it. All statements of reasons for findings on the issue of reasonable cause must specifically reference the evidence in the record on which each reason is based.

(b) *Recipient-initiated proceedings.* If, based on notification by the firm of a change in its circumstances or other information that comes to your attention, you determine that there is reasonable cause to believe that a currently certified firm is ineligible, you must provide written notice to the firm that you propose to find the firm ineligible, setting forth the reasons for the proposed determination. The statement of reasons for the finding of reasonable cause must specifically reference the evidence in the record on which each reason is based.

(c) *DOT directive to initiate proceeding.* (1) If the concerned operating administration determines that information in your certification records, or other information available to the concerned operating administration, provides reasonable cause to believe that a firm you certified does not meet the eligibility criteria of this part, the concerned operating administration may direct you to initiate a proceeding to remove the firm's certification.

(2) The concerned operating administration must provide you and the firm a notice setting forth the reasons for the directive, including any relevant documentation or other information.

(3) You must immediately commence and prosecute a proceeding to remove eligibility as provided by paragraph (b) of this section.

(d) *Hearing.* When you notify a firm that there is reasonable cause to remove its eligibility, as provided in paragraph (a), (b), or (c) of this section, you must give the firm an opportunity

for an informal hearing, at which the firm may respond to the reasons for the proposal to remove its eligibility in person and provide information and arguments concerning why it should remain certified.

(1) In such a proceeding, you bear the burden of proving, by a preponderance of the evidence, that the firm does not meet the certification standards of this part.

(2) You must maintain a complete record of the hearing, by any means acceptable under state law for the retention of a verbatim record of an administrative hearing. If there is an appeal to DOT under § 26.89, you must provide a transcript of the hearing to DOT and, on request, to the firm. You must retain the original record of the hearing. You may charge the firm only for the cost of copying the record.

(3) The firm may elect to present information and arguments in writing, without going to a hearing. In such a situation, you bear the same burden of proving, by a preponderance of the evidence, that the firm does not meet the certification standards, as you would during a hearing.

(e) *Separation of functions.* You must ensure that the decision in a proceeding to remove a firm's eligibility is made by an office and personnel that did not take part in actions leading to or seeking to implement the proposal to remove the firm's eligibility and are not subject, with respect to the matter, to direction from the office or personnel who did take part in these actions.

(1) Your method of implementing this requirement must be made part of your DBE program.

(2) The decisionmaker must be an individual who is knowledgeable about the certification requirements of your DBE program and this part.

(3) Before a UCP is operational in its state, a small airport or small transit authority (i.e., an airport or transit authority serving an area with less than 250,000 population) is required to meet this requirement only to the extent feasible.

(f) *Grounds for decision.* You must not base a decision to remove eligibility on a reinterpretation or changed opinion of information available to the recipient at the time of its certification of the firm. You may base such a decision only on one or more of the following:

(1) Changes in the firm's circumstances since the certification of the firm by the recipient that render the firm unable to meet the eligibility standards of this part;

(2) Information or evidence not available to you at the time the firm was certified;

(3) Information that was concealed or misrepresented by the firm in previous certification actions by a recipient;

(4) A change in the certification standards or requirements of the Department since you certified the firm; or

(5) A documented finding that your determination to certify the firm was factually erroneous.

(g) *Notice of decision.* Following your decision, you must provide the firm written notice of the decision and the reasons for it, including specific references to the evidence in the record that supports each reason for the decision. The notice must inform the firm of the consequences of your decision and of the availability of an appeal to the Department of Transportation under § 26.89. You must send copies of the notice to the complainant in an ineligibility complaint or the concerned operating administration that had directed you to initiate the proceeding.

(h) *Status of firm during proceeding.* (1) A firm remains an eligible DBE during the pendancy of your proceeding to remove its eligibility.

(2) The firm does not become ineligible until the issuance of the notice provided for in paragraph (g) of this section.

(i) *Effects of removal of eligibility.* When you remove a firm's eligibility, you must take the following action:

(1) When a prime contractor has made a commitment to using the ineligible firm, or you have made a commitment to using a DBE prime contractor, but a subcontract or contract has not been executed before you issue the decertification notice provided for in paragraph (g) of this section, the ineligible firm does not count toward the contract goal or overall goal. You must direct the prime contractor to meet the contract goal with an eligible DBE

firm or demonstrate to you that it has made a good faith effort to do so.

(2) If a prime contractor has executed a subcontract with the firm before you have notified the firm of its ineligibility, the prime contractor may continue to use the firm on the contract and may continue to receive credit toward its DBE goal for the firm's work. In this case, or in a case where you have let a prime contract to the DBE that was later ruled ineligible, the portion of the ineligible firm's performance of the contract remaining after you issued the notice of its ineligibility shall not count toward your overall goal, but may count toward the contract goal.

(3) *Exception:* If the DBE's ineligibility is caused solely by its having exceeded the size standard during the performance of the contract, you may continue to count its participation on that contract toward overall and contract goals.

(j) *Availability of appeal.* When you make an administratively final removal of a firm's eligibility under this section, the firm may appeal the removal to the Department under §26.89.

§26.89 What is the process for certification appeals to the Department of Transportation?

(a)(1) If you are a firm which is denied certification or whose eligibility is removed by a recipient, you may make an administrative appeal to the Department.

(2) If you are a complainant in an ineligibility complaint to a recipient (including the concerned operating administration in the circumstances provided in §26.87(c)), you may appeal to the Department if the recipient does not find reasonable cause to propose removing the firm's eligibility or, following a removal of eligibility proceeding, determines that the firm is eligible.

(3) Send appeals to the following address: Department of Transportation, Office of Civil Rights, 400 7th Street, SW, Room 2401, Washington, DC 20590.

(b) Pending the Department's decision in the matter, the recipient's decision remains in effect. The Department does not stay the effect of the recipient's decision while it is considering an appeal.

(c) If you want to file an appeal, you must send a letter to the Department within 90 days of the date of the recipient's final decision, including information and arguments concerning why the recipient's decision should be reversed. The Department may accept an appeal filed later than 90 days after the date of the decision if the Department determines that there was good cause for the late filing of the appeal.

(1) If you are an appellant who is a firm which has been denied certification, whose certification has been removed, whose owner is determined not to be a member of a designated disadvantaged group, or concerning whose owner the presumption of disadvantage has been rebutted, your letter must state the name and address of any other recipient which currently certifies the firm, which has rejected an application for certification from the firm or removed the firm's eligibility within one year prior to the date of the appeal, or before which an application for certification or a removal of eligibility is pending. Failure to provide this information may be deemed a failure to cooperate under §26.109(c).

(2) If you are an appellant other than one described in paragraph (c)(1) of this section, the Department will request, and the firm whose certification has been questioned shall promptly provide, the information called for in paragraph (c)(1) of this section. Failure to provide this information may be deemed a failure to cooperate under §26.109(c).

(d) When it receives an appeal, the Department requests a copy of the recipient's complete administrative record in the matter. If you are the recipient, you must provide the administrative record, including a hearing transcript, within 20 days of the Department's request. The Department may extend this time period on the basis of a recipient's showing of good cause. To facilitate the Department's review of a recipient's decision, you must ensure that such administrative records are well organized, indexed, and paginated. Records that do not comport with these requirements are not acceptable and will be returned to

you to be corrected immediately. If an appeal is brought concerning one recipient's certification decision concerning a firm, and that recipient relied on the decision and/or administrative record of another recipient, this requirement applies to both recipients involved.

(e) The Department makes its decision based solely on the entire administrative record. The Department does not make a de novo review of the matter and does not conduct a hearing. The Department may supplement the administrative record by adding relevant information made available by the DOT Office of Inspector General; Federal, state, or local law enforcement authorities; officials of a DOT operating administration or other appropriate DOT office; a recipient; or a firm or other private party.

(f) As a recipient, when you provide supplementary information to the Department, you shall also make this information available to the firm and any third-party complainant involved, consistent with Federal or applicable state laws concerning freedom of information and privacy. The Department makes available, on request by the firm and any third-party complainant involved, any supplementary information it receives from any source.

(1) The Department affirms your decision unless it determines, based on the entire administrative record, that your decision is unsupported by substantial evidence or inconsistent with the substantive or procedural provisions of this part concerning certification.

(2) If the Department determines, after reviewing the entire administrative record, that your decision was unsupported by substantial evidence or inconsistent with the substantive or procedural provisions of this part concerning certification, the Department reverses your decision and directs you to certify the firm or remove its eligibility, as appropriate. You must take the action directed by the Department's decision immediately upon receiving written notice of it.

(3) The Department is not required to reverse your decision if the Department determines that a procedural error did not result in fundamental unfairness to the appellant or substantially prejudice the opportunity of the appellant to present its case.

(4) If it appears that the record is incomplete or unclear with respect to matters likely to have a significant impact on the outcome of the case, the Department may remand the record to you with instructions seeking clarification or augmentation of the record before making a finding. The Department may also remand a case to you for further proceedings consistent with Department instructions concerning the proper application of the provisions of this part.

(5) The Department does not uphold your decision based on grounds not specified in your decision.

(6) The Department's decision is based on the status and circumstances of the firm as of the date of the decision being appealed.

(7) The Department provides written notice of its decision to you, the firm, and the complainant in an ineligibility complaint. A copy of the notice is also sent to any other recipient whose administrative record or decision has been involved in the proceeding (see paragraph (d) of this section). The notice includes the reasons for the Department's decision, including specific references to the evidence in the record that supports each reason for the decision.

(8) The Department's policy is to make its decision within 180 days of receiving the complete administrative record. If the Department does not make its decision within this period, the Department provides written notice to concerned parties, including a statement of the reason for the delay and a date by which the appeal decision will be made.

(g) All decisions under this section are administratively final, and are not subject to petitions for reconsideration.

§ 26.91 What actions do recipients take following DOT certification appeal decisions?

(a) If you are the recipient from whose action an appeal under § 26.89 is taken, the decision is binding. It is not binding on other recipients.

(b) If you are a recipient to which a DOT determination under § 26.89 is applicable, you must take the following action:

(1) If the Department determines that you erroneously certified a firm, you must remove the firm's eligibility on receipt of the determination, without further proceedings on your part. Effective on the date of your receipt of the Department's determination, the consequences of a removal of eligibility set forth in § 26.87(i) take effect.

(2) If the Department determines that you erroneously failed to find reasonable cause to remove the firm's eligibility, you must expeditiously commence a proceeding to determine whether the firm's eligibility should be removed, as provided in § 26.87.

(3) If the Department determines that you erroneously declined to certify or removed the eligibility of the firm, you must certify the firm, effective on the date of your receipt of the written notice of Department's determination.

(4) If the Department determines that you erroneously determined that the presumption of social and economic disadvantage either should or should not be deemed rebutted, you must take appropriate corrective action as determined by the Department.

(5) If the Department affirms your determination, no further action is necessary.

(c) Where DOT has upheld your denial of certification to or removal of eligibility from a firm, or directed the removal of a firm's eligibility, other recipients with whom the firm is certified may commence a proceeding to remove the firm's eligibility under § 26.87. Such recipients must not remove the firm's eligibility absent such a proceeding. Where DOT has reversed your denial of certification to or removal of eligibility from a firm, other recipients must take the DOT action into account in any certification action involving the firm. However, other recipients are not required to certify the firm based on the DOT decision.

Subpart F—Compliance and Enforcement

§ 26.101 What compliance procedures apply to recipients?

(a) If you fail to comply with any requirement of this part, you may be subject to formal enforcement action under § 26.103 or § 26.105 or appropriate program sanctions by the concerned operating administration, such as the suspension or termination of Federal funds, or refusal to approve projects, grants or contracts until deficiencies are remedied. Program sanctions may include, in the case of the FHWA program, actions provided for under 23 CFR 1.36; in the case of the FAA program, actions consistent with 49 U.S.C. 47106(d), 47111(d), and 47122; and in the case of the FTA program, any actions permitted under 49 U.S.C. chapter 53 or applicable FTA program requirements.

(b) As provided in statute, you will not be subject to compliance actions or sanctions for failing to carry out any requirement of this part because you have been prevented from complying because a Federal court has issued a final order in which the court found that the requirement is unconstitutional.

§ 26.103 What enforcement actions apply in FHWA and FTA programs?

The provisions of this section apply to enforcement actions under FHWA and FTA programs:

(a) *Noncompliance complaints.* Any person who believes that a recipient has failed to comply with its obligations under this part may file a written complaint with the concerned operating administration's Office of Civil Rights. If you want to file a complaint, you must do so no later than 180 days after the date of the alleged violation or the date on which you learned of a continuing course of conduct in violation of this part. In response to your written request, the Office of Civil Rights may extend the time for filing in the interest of justice, specifying in writing the reason for so doing. The Office of Civil Rights may protect the

confidentiality of your identity as provided in § 26.109(b). Complaints under this part are limited to allegations of violation of the provisions of this part.

(b) *Compliance reviews.* The concerned operating administration may review the recipient's compliance with this part at any time, including reviews of paperwork and on-site reviews, as appropriate. The Office of Civil Rights may direct the operating administration to initiate a compliance review based on complaints received.

(c) *Reasonable cause notice.* If it appears, from the investigation of a complaint or the results of a compliance review, that you, as a recipient, are in noncompliance with this part, the appropriate DOT office promptly sends you, return receipt requested, a written notice advising you that there is reasonable cause to find you in noncompliance. The notice states the reasons for this finding and directs you to reply within 30 days concerning whether you wish to begin conciliation.

(d) *Conciliation.* (1) If you request conciliation, the appropriate DOT office shall pursue conciliation for at least 30, but not more than 120, days from the date of your request. The appropriate DOT office may extend the conciliation period for up to 30 days for good cause, consistent with applicable statutes.

(2) If you and the appropriate DOT office sign a conciliation agreement, then the matter is regarded as closed and you are regarded as being in compliance. The conciliation agreement sets forth the measures you have taken or will take to ensure compliance. While a conciliation agreement is in effect, you remain eligible for FHWA or FTA financial assistance.

(3) The concerned operating administration shall monitor your implementation of the conciliation agreement and ensure that its terms are complied with. If you fail to carry out the terms of a conciliation agreement, you are in noncompliance.

(4) If you do not request conciliation, or a conciliation agreement is not signed within the time provided in paragraph (d)(1) of this section, then enforcement proceedings begin.

(e) *Enforcement actions.* (1) Enforcement actions are taken as provided in this subpart.

(2) Applicable findings in enforcement proceedings are binding on all DOT offices.

§ 26.105 What enforcement actions apply in FAA Programs?

(a) Compliance with all requirements of this part by airport sponsors and other recipients of FAA financial assistance is enforced through the procedures of Title 49 of the United States Code, including 49 U.S.C. 47106(d), 47111(d), and 47122, and regulations implementing them.

(b) The provisions of § 26.103(b) and this section apply to enforcement actions in FAA programs.

(c) Any person who knows of a violation of this part by a recipient of FAA funds may file a complaint under 14 CFR part 16 with the Federal Aviation Administration Office of Chief Counsel.

§ 26.107 What enforcement actions apply to firms participating in the DBE program?

(a) If you are a firm that does not meet the eligibility criteria of subpart D of this part and that attempts to participate in a DOT-assisted program as a DBE on the basis of false, fraudulent, or deceitful statements or representations or under circumstances indicating a serious lack of business integrity or honesty, the Department may initiate suspension or debarment proceedings against you under 49 CFR part 29.

(b) If you are a firm that, in order to meet DBE contract goals or other DBE program requirements, uses or attempts to use, on the basis of false, fraudulent or deceitful statements or representations or under circumstances indicating a serious lack of business integrity or honesty, another firm that does not meet the eligibility criteria of subpart D of this part, the Department may initiate suspension or debarment proceedings against you under 49 CFR part 29.

(c) In a suspension or debarment proceeding brought under paragraph (a) or (b) of this section, the concerned operating administration may consider the fact that a purported DBE has been

certified by a recipient. Such certification does not preclude the Department from determining that the purported DBE, or another firm that has used or attempted to use it to meet DBE goals, should be suspended or debarred.

(d) The Department may take enforcement action under 49 CFR Part 31, Program Fraud and Civil Remedies, against any participant in the DBE program whose conduct is subject to such action under 49 CFR part 31.

(e) The Department may refer to the Department of Justice, for prosecution under 18 U.S.C. 1001 or other applicable provisions of law, any person who makes a false or fraudulent statement in connection with participation of a DBE in any DOT-assisted program or otherwise violates applicable Federal statutes.

§ 26.109 What are the rules governing information, confidentiality, cooperation, and intimidation or retaliation?

(a) *Availability of records.* (1) In responding to requests for information concerning any aspect of the DBE program, the Department complies with provisions of the Federal Freedom of Information and Privacy Acts (5 U.S.C. 552 and 552a). The Department may make available to the public any information concerning the DBE program release of which is not prohibited by Federal law.

(2) If you are a recipient, you shall safeguard from disclosure to unauthorized persons information that may reasonably be considered as confidential business information, consistent with Federal, state, and local law.

(b) *Confidentiality of information on complainants.* Notwithstanding the provisions of paragraph (a) of this section, the identity of complainants shall be kept confidential, at their election. If such confidentiality will hinder the investigation, proceeding or hearing, or result in a denial of appropriate administrative due process to other parties, the complainant must be advised for the purpose of waiving the privilege. Complainants are advised that, in some circumstances, failure to waive the privilege may result in the closure of the investigation or dismissal of the proceeding or hearing. FAA follows the procedures of 14 CFR part 16 with respect to confidentiality of information in complaints.

(c) *Cooperation.* All participants in the Department's DBE program (including, but not limited to, recipients, DBE firms and applicants for DBE certification, complainants and appellants, and contractors using DBE firms to meet contract goals) are required to cooperate fully and promptly with DOT and recipient compliance reviews, certification reviews, investigations, and other requests for information. Failure to do so shall be a ground for appropriate action against the party involved (e.g., with respect to recipients, a finding of noncompliance; with respect to DBE firms, denial of certification or removal of eligibility and/or suspension and debarment; with respect to a complainant or appellant, dismissal of the complaint or appeal; with respect to a contractor which uses DBE firms to meet goals, findings of non-responsibility for future contracts and/or suspension and debarment).

(d) *Intimidation and retaliation.* If you are a recipient, contractor, or any other participant in the program, you must not intimidate, threaten, coerce, or discriminate against any individual or firm for the purpose of interfering with any right or privilege secured by this part or because the individual or firm has made a complaint, testified, assisted, or participated in any manner in an investigation, proceeding, or hearing under this part. If you violate this prohibition, you are in noncompliance with this part.

APPENDIX A TO PART 26—GUIDANCE CONCERNING GOOD FAITH EFFORTS

I. When, as a recipient, you establish a contract goal on a DOT-assisted contract, a bidder must, in order to be responsible and/or responsive, make good faith efforts to meet the goal. The bidder can meet this requirement in either of two ways. First, the bidder can meet the goal, documenting commitments for participation by DBE firms sufficient for this purpose. Second, even if it doesn't meet the goal, the bidder can document adequate good faith efforts. This means that the bidder must show that it took all necessary and reasonable steps to achieve a DBE goal or other requirement of this part which, by their scope, intensity, and appropriateness to the objective, could reasonably

be expected to obtain sufficient DBE participation, even if they were not fully successful.

II. In any situation in which you have established a contract goal, part 26 requires you to use the good faith efforts mechanism of this part. As a recipient, it is up to you to make a fair and reasonable judgment whether a bidder that did not meet the goal made adequate good faith efforts. It is important for you to consider the quality, quantity, and intensity of the different kinds of efforts that the bidder has made. The efforts employed by the bidder should be those that one could reasonably expect a bidder to take if the bidder were actively and aggressively trying to obtain DBE participation sufficient to meet the DBE contract goal. Mere *pro forma* efforts are not good faith efforts to meet the DBE contract requirements. We emphasize, however, that your determination concerning the sufficiency of the firm's good faith efforts is a judgment call: meeting quantitative formulas is not required.

III. The Department also strongly cautions you against requiring that a bidder meet a contract goal (i.e., obtain a specified amount of DBE participation) in order to be awarded a contract, even though the bidder makes an adequate good faith efforts showing. This rule specifically prohibits you from ignoring *bona fide* good faith efforts.

IV. The following is a list of types of actions which you should consider as part of the bidder's good faith efforts to obtain DBE participation. It is not intended to be a mandatory checklist, nor is it intended to be exclusive or exhaustive. Other factors or types of efforts may be relevant in appropriate cases.

A. Soliciting through all reasonable and available means (e.g. attendance at pre-bid meetings, advertising and/or written notices) the interest of all certified DBEs who have the capability to perform the work of the contract. The bidder must solicit this interest within sufficient time to allow the DBEs to respond to the solicitation. The bidder must determine with certainty if the DBEs are interested by taking appropriate steps to follow up initial solicitations.

B. Selecting portions of the work to be performed by DBEs in order to increase the likelihood that the DBE goals will be achieved. This includes, where appropriate, breaking out contract work items into economically feasible units to facilitate DBE participation, even when the prime contractor might otherwise prefer to perform these work items with its own forces.

C. Providing interested DBEs with adequate information about the plans, specifications, and requirements of the contract in a timely manner to assist them in responding to a solicitation.

D. (1) Negotiating in good faith with interested DBEs. It is the bidder's responsibility to make a portion of the work available to DBE subcontractors and suppliers and to select those portions of the work or material needs consistent with the available DBE subcontractors and suppliers, so as to facilitate DBE participation. Evidence of such negotiation includes the names, addresses, and telephone numbers of DBEs that were considered; a description of the information provided regarding the plans and specifications for the work selected for subcontracting; and evidence as to why additional agreements could not be reached for DBEs to perform the work.

(2) A bidder using good business judgment would consider a number of factors in negotiating with subcontractors, including DBE subcontractors, and would take a firm's price and capabilities as well as contract goals into consideration. However, the fact that there may be some additional costs involved in finding and using DBEs is not in itself sufficient reason for a bidder's failure to meet the contract DBE goal, as long as such costs are reasonable. Also, the ability or desire of a prime contractor to perform the work of a contract with its own organization does not relieve the bidder of the responsibility to make good faith efforts. Prime contractors are not, however, required to accept higher quotes from DBEs if the price difference is excessive or unreasonable.

E. Not rejecting DBEs as being unqualified without sound reasons based on a thorough investigation of their capabilities. The contractor's standing within its industry, membership in specific groups, organizations, or associations and political or social affiliations (for example union vs. non-union employee status) are not legitimate causes for the rejection or non-solicitation of bids in the contractor's efforts to meet the project goal.

F. Making efforts to assist interested DBEs in obtaining bonding, lines of credit, or insurance as required by the recipient or contractor.

G. Making efforts to assist interested DBEs in obtaining necessary equipment, supplies, materials, or related assistance or services.

H. Effectively using the services of available minority/women community organizations; minority/women contractors' groups; local, state, and Federal minority/women business assistance offices; and other organizations as allowed on a case-by-case basis to provide assistance in the recruitment and placement of DBEs.

V. In determining whether a bidder has made good faith efforts, you may take into account the performance of other bidders in meeting the contract. For example, when the apparent successful bidder fails to meet the contract goal, but others meet it, you may reasonably raise the question of whether,

with additional reasonable efforts, the apparent successful bidder could have met the goal. If the apparent successful bidder fails to meet the goal, but meets or exceeds the average DBE participation obtained by other bidders, you may view this, in conjunction with other factors, as evidence of the apparent successful bidder having made good faith efforts.

APPENDIX B TO PART 26—FORMS [RESERVED]

APPENDIX C TO PART 26—DBE BUSINESS DEVELOPMENT PROGRAM GUIDELINES

The purpose of this program element is to further the development of DBEs, including but not limited to assisting them to move into non-traditional areas of work and/or compete in the marketplace outside the DBE program, via the provision of training and assistance from the recipient.

(A) Each firm that participates in a recipient's business development program (BDP) program is subject to a program term determined by the recipient. The term should consist of two stages; a developmental stage and a transitional stage.

(B) In order for a firm to remain eligible for program participation, it must continue to meet all eligibility criteria contained in part 26.

(C) By no later than 6 months of program entry, the participant should develop and submit to the recipient a comprehensive business plan setting forth the participant's business targets, objectives and goals. The participant will not be eligible for program benefits until such business plan is submitted and approved by the recipient. The approved business plan will constitute the participant's short and long term goals and the strategy for developmental growth to the point of economic viability in non-traditional areas of work and/or work outside the DBE program.

(D) The business plan should contain at least the following:

(1) An analysis of market potential, competitive environment and other business analyses estimating the program participant's prospects for profitable operation during the term of program participation and after graduation from the program.

(2) An analysis of the firm's strengths and weaknesses, with particular attention paid to the means of correcting any financial, managerial, technical, or labor conditions which could impede the participant from receiving contracts other than those in traditional areas of DBE participation.

(3) Specific targets, objectives, and goals for the business development of the participant during the next two years, utilizing the results of the analysis conducted pursuant to paragraphs (C) and (D)(1) of this appendix;

(4) Estimates of contract awards from the DBE program and from other sources which are needed to meet the objectives and goals for the years covered by the business plan; and

(5) Such other information as the recipient may require.

(E) Each participant should annually review its currently approved business plan with the recipient and modify the plan as may be appropriate to account for any changes in the firm's structure and redefined needs. The currently approved plan should be considered the applicable plan for all program purposes until the recipient approves in writing a modified plan. The recipient should establish an anniversary date for review of the participant's business plan and contract forecasts.

(F) Each participant should annually forecast in writing its need for contract awards for the next program year and the succeeding program year during the review of its business plan conducted under paragraph (E) of this appendix. Such forecast should be included in the participant's business plan. The forecast should include:

(1) The aggregate dollar value of contracts to be sought under the DBE program, reflecting compliance with the business plan;

(2) The aggregate dollar value of contracts to be sought in areas other than traditional areas of DBE participation;

(3) The types of contract opportunities being sought, based on the firm's primary line of business; and

(4) Such other information as may be requested by the recipient to aid in providing effective business development assistance to the participant.

(G) Program participation is divided into two stages; (1) a developmental stage and (2) a transitional stage. The developmental stage is designed to assist participants to overcome their social and economic disadvantage by providing such assistance as may be necessary and appropriate to enable them to access relevant markets and strengthen their financial and managerial skills. The transitional stage of program participation follows the developmental stage and is designed to assist participants to overcome, insofar as practical, their social and economic disadvantage and to prepare the participant for leaving the program.

(H) The length of service in the program term should not be a pre-set time frame for either the developmental or transitional stages but should be figured on the number of years considered necessary in normal progression of achieving the firm's established goals and objectives. The setting of such time could be factored on such items as, but not limited to, the number of contracts, aggregate amount of the contract received, years in business, growth potential, etc.

(I) Beginning in the first year of the transitional stage of program participation, each participant should annually submit for inclusion in its business plan a transition management plan outlining specific steps to promote profitable business operations in areas other than traditional areas of DBE participation after graduation from the program. The transition management plan should be submitted to the recipient at the same time other modifications are submitted pursuant to the annual review under paragraph (E) of this section. The plan should set forth the same information as required under paragraph (F) of steps the participant will take to continue its business development after the expiration of its program term.

(J) When a participant is recognized as successfully completing the program by substantially achieving the targets, objectives and goals set forth in its program term, and has demonstrated the ability to compete in the marketplace, its further participation within the program may be determined by the recipient.

(K) In determining whether a concern has substantially achieved the goals and objectives of its business plan, the following factors, among others, should be considered by the recipient:

(1) Profitability;

(2) Sales, including improved ratio of non-traditional contracts to traditional-type contracts;

(3) Net worth, financial ratios, working capital, capitalization, access to credit and capital;

(4) Ability to obtain bonding;

(5) A positive comparison of the DBE's business and financial profile with profiles of non-DBE businesses in the same area or similar business category; and

(6) Good management capacity and capability.

(L) Upon determination by the recipient that the participant should be graduated from the developmental program, the recipient should notify the participant in writing of its intent to graduate the firm in a letter of notification. The letter of notification should set forth findings, based on the facts, for every material issue relating to the basis of the program graduation with specific reasons for each finding. The letter of notification should also provide the participant 45 days from the date of service of the letter to submit in writing information that would explain why the proposed basis of graduation is not warranted.

(M) Participation of a DBE firm in the program may be discontinued by the recipient prior to expiration of the firm's program term for good cause due to the failure of the firm to engage in business practices that will promote its competitiveness within a reasonable period of time as evidenced by, among other indicators, a pattern of inadequate performance or unjustified delinquent performance. Also, the recipient can discontinue the participation of a firm that does not actively pursue and bid on contracts, and a firm that, without justification, regularly fails to respond to solicitations in the type of work it is qualified for and in the geographical areas where it has indicated availability under its approved business plan. The recipient should take such action if over a 2-year period a DBE firm exhibits such a pattern.

APPENDIX D TO PART 26—MENTOR-PROTEGE PROGRAM GUIDELINES

(A) The purpose of this program element is to further the development of DBEs, including but not limited to assisting them to move into non-traditional areas of work and/or compete in the marketplace outside the DBE program, via the provision of training and assistance from other firms. To operate a mentor-protege program, a recipient must obtain the approval of the concerned operating administration.

(B)(1) Any mentor-protege relationship shall be based on a written development plan, approved by the recipient, which clearly sets forth the objectives of the parties and their respective roles, the duration of the arrangement and the services and resources to be provided by the mentor to the protege. The formal mentor-protege agreement may set a fee schedule to cover the direct and indirect cost for such services rendered by the mentor for specific training and assistance to the protege through the life of the agreement. Services provided by the mentor may be reimbursable under the FTA, FHWA, and FAA programs.

(2) To be eligible for reimbursement, the mentor's services provided and associated costs must be directly attributable and properly allowable to specific individual contracts. The recipient may establish a line item for the mentor to quote the portion of the fee schedule expected to be provided during the life of the contract. The amount claimed shall be verified by the recipient and paid on an incremental basis representing the time the protege is working on the contract. The total individual contract figures accumulated over the life of the agreement shall not exceed the amount stipulated in the original mentor/protege agreement.

(C) DBEs involved in a mentor-protege agreement must be independent business entities which meet the requirements for certification as defined in subpart D of this part. A protege firm must be certified *before* it begins participation in a mentor-protege arrangement. If the recipient chooses to recognize mentor/protege agreements, it should establish formal general program guidelines. These guidelines must be submitted to the operating administration for approval prior to the recipient executing an individual

contractor/ subcontractor mentor-protégé agreement.

APPENDIX E TO PART 26—INDIVIDUAL DETERMINATIONS OF SOCIAL AND ECONOMIC DISADVANTAGE

The following guidance is adapted, with minor modifications, from SBA regulations concerning social and economic disadvantage determinations (see 13 CFR 124.103(c) and 124.104).

SOCIAL DISADVANTAGE

I. Socially disadvantaged individuals are those who have been subjected to racial or ethnic prejudice or cultural bias within American society because of their identities as members of groups and without regard to their individual qualities. Social disadvantage must stem from circumstances beyond their control. Evidence of individual social disadvantage must include the following elements:

(A) At least one objective distinguishing feature that has contributed to social disadvantage, such as race, ethnic origin, gender, disability, long-term residence in an environment isolated from the mainstream of American society, or other similar causes not common to individuals who are not socially disadvantaged;

(B) Personal experiences of substantial and chronic social disadvantage in American society, not in other countries; and

(C) Negative impact on entry into or advancement in the business world because of the disadvantage. Recipients will consider any relevant evidence in assessing this element. In every case, however, recipients will consider education, employment and business history, where applicable, to see if the totality of circumstances shows disadvantage in entering into or advancing in the business world.

(1) *Education*. Recipients will consider such factors as denial of equal access to institutions of higher education and vocational training, exclusion from social and professional association with students or teachers, denial of educational honors rightfully earned, and social patterns or pressures which discouraged the individual from pursuing a professional or business education.

(2) *Employment*. Recipients will consider such factors as unequal treatment in hiring, promotions and other aspects of professional advancement, pay and fringe benefits, and other terms and conditions of employment; retaliatory or discriminatory behavior by an employer or labor union; and social patterns or pressures which have channeled the individual into non-professional or non-business fields.

(3) *Business history*. The recipient will consider such factors as unequal access to credit or capital, acquisition of credit or capital under commercially unfavorable circumstances, unequal treatment in opportunities for government contracts or other work, unequal treatment by potential customers and business associates, and exclusion from business or professional organizations.

II. With respect to paragraph I.(A) of this appendix, the Department notes that people with disabilities have disproportionately low incomes and high rates of unemployment. Many physical and attitudinal barriers remain to their full participation in education, employment, and business opportunities available to the general public. The Americans with Disabilities Act (ADA) was passed in recognition of the discrimination faced by people with disabilities. It is plausible that many individuals with disabilities—especially persons with severe disabilities (e.g., significant mobility, vision, or hearing impairments)—may be socially and economically disadvantaged.

III. Under the laws concerning social and economic disadvantage, people with disabilities are not a group presumed to be disadvantaged. Nevertheless, recipients should look carefully at individual showings of disadvantage by individuals with disabilities, making a case-by-case judgment about whether such an individual meets the criteria of this appendix. As public entities subject to Title II of the ADA, recipients must also ensure their DBE programs are accessible to individuals with disabilities. For example, physical barriers or the lack of application and information materials in accessible formats cannot be permitted to thwart the access of potential applicants to the certification process or other services made available to DBEs and applicants.

ECONOMIC DISADVANTAGE

(A) *General*. Economically disadvantaged individuals are socially disadvantaged individuals whose ability to compete in the free enterprise system has been impaired due to diminished capital and credit opportunities as compared to others in the same or similar line of business who are not socially disadvantaged.

(B) *Submission of narrative and financial information*.

(1) Each individual claiming economic disadvantage must describe the conditions which are the basis for the claim in a narrative statement, and must submit personal financial information.

(2) When married, an individual claiming economic disadvantage also must submit separate financial information for his or her spouse, unless the individual and the spouse are legally separated.

(C) *Factors to be considered*. In considering diminished capital and credit opportunities, recipients will examine factors relating to

the personal financial condition of any individual claiming disadvantaged status, including personal income for the past two years (including bonuses and the value of company stock given in lieu of cash), personal net worth, and the fair market value of all assets, whether encumbered or not. Recipients will also consider the financial condition of the applicant compared to the financial profiles of small businesses in the same primary industry classification, or, if not available, in similar lines of business, which are not owned and controlled by socially and economically disadvantaged individuals in evaluating the individual's access to credit and capital. The financial profiles that recipients will compare include total assets, net sales, pre-tax profit, sales/working capital ratio, and net worth.

(D) *Transfers within two years.*

(1) Except as set forth in paragraph (D)(2) of this appendix, recipients will attribute to an individual claiming disadvantaged status any assets which that individual has transferred to an immediate family member, or to a trust, a beneficiary of which is an immediate family member, for less than fair market value, within two years prior to a concern's application for participation in the DBE program, unless the individual claiming disadvantaged status can demonstrate that the transfer is to or on behalf of an immediate family member for that individual's education, medical expenses, or some other form of essential support.

(2) Recipients will not attribute to an individual claiming disadvantaged status any assets transferred by that individual to an immediate family member that are consistent with the customary recognition of special occasions, such as birthdays, graduations, anniversaries, and retirements.

(3) In determining an individual's access to capital and credit, recipients may consider any assets that the individual transferred within such two-year period described by paragraph (D)(1) of this appendix that are not considered in evaluating the individual's assets and net worth (e.g., transfers to charities).

PART 27—NONDISCRIMINATION ON THE BASIS OF DISABILITY IN PROGRAMS AND ACTIVITIES RECEIVING OR BENEFITTING FROM FEDERAL FINANCIAL ASSISTANCE

Subpart A—General

Sec.
27.1 Purpose.
27.3 Applicability.
27.5 Definitions.
27.7 Discrimination prohibited.
27.9 Assurance required.
27.11 Remedial action, voluntary action, and compliance planning.
27.13 Designation of responsible employee and adoption of grievance procedures.
27.15 Notice.
27.17 Effect of State or local law.
27.19 Compliance with Americans with Disabilities Act requirements and FTA policy.

Subpart B—Program Accessibility Requirements in Specific Operating Administration Programs: Airports, Railroads, and Highways

27.71 Airport facilities.
27.72 Boarding assistance for small aircraft.
27.75 Federal Highway Administration—highways.
27.77 Recipients of Essential Air Service subsidies.

Subpart C—Enforcement

27.121 Compliance information.
27.123 Conduct of investigations.
27.125 Compliance procedure.
27.127 Hearings.
27.129 Decisions and notices.

AUTHORITY: Sec. 504 of the Rehabilitation Act of 1973, as amended (29 U.S.C. 794); sec. 16 (a) and (d) of the Federal Transit Act of 1964, as amended (49 U.S.C. 5310 (a) and (f); sec. 165(b) of the Federal-Aid Highway Act of 1973, as amended (23 U.S.C. 142 nt.).

SOURCE: 44 FR 31468, May 31, 1979, unless otherwise noted.

EDITORIAL NOTE: Nomenclature changes to part 27 appear at 61 FR 56424, Nov. 1, 1996.

Subpart A—General

§ 27.1 Purpose.

The purpose of this part is to carry out the intent of section 504 of the Rehabilitation Act of 1973 (29 U.S.C. 794) as amended, to the end that no otherwise qualified individual with a disability in the United States shall, solely by reason of his or her disability, be excluded from the participation in, be denied the benefits of, or be subjected to discrimination under any program or activity receiving Federal financial assistance.

§ 27.3 Applicability.

(a) This part applies to each recipient of Federal financial assistance from the Department of Transportation and to each program or activity that receives or benefits from such assistance.

(b) Design, construction, or alteration of buildings or other fixed facilities by public entities subject to part 37 of this title shall be in conformance with appendix A to part 37 of this title. All other entities subject to section 504 shall design, construct or alter a building, or other fixed facilities shall be in conformance with either appendix A to part 37 of this title or the Uniform Federal Accessibility Standards, 41 CFR part 101–19 subpart 101–19.6, appendix A.

[44 FR 31468, May 31, 1979, as amended at 56 FR 45621, Sept. 6, 1991]

§27.5 Definitions.

As used in this part:

Act means the Rehabilitation Act of 1973, Public Law 93–112, as amended.

Applicant means one who submits an application, request, or plan to be approved by a Departmental official or by a primary recipient as a condition to eligibility for Federal financial assistance, and *application* means such an application, request, or plan.

Commercial service airport means an airport that is defined as a commercial service airport for purposes of the Federal Aviation Administration's Airport Improvement Program and that enplanes annually 2500 or more passengers and receives scheduled passenger service of aircraft.

Department means the Department of Transportation.

Discrimination means denying handicapped persons the opportunity to participate in or benefit from any program or activity receiving Federal financial assistance.

Facility means all or any portion of buildings, structures, vehicles, equipment, roads, walks, parking lots, or other real or personal property or interest in such property.

Federal financial assistance means any grant, loan, contract (other than a procurement contract or a contract of insurance or guaranty), or any other arrangement by which the Department provides or otherwise makes available assistance in the form of:

(a) Funds;

(b) Services of Federal personnel; or

(c) Real or personal property or any interest in, or use of such property, including:

(1) Transfers or leases of such property for less than fair market value or for reduced consideration; and

(2) Proceeds from a subsequent transfer or lease of such property if the Federal share of its fair market value is not returned to the Federal Government.

Handicapped person means (1) any person who (a) has a physical or mental impairment that substantially limits one or more major life activities, (b) has a record of such an impairment, or (c) is regarded as having such an impairment. (2) As used in this definition, the phrase:

(a) *Physical or mental impairment* means (i) any physiological disorder or condition, cosmetic disfigurement, or anatomical loss affecting one or more of the following body systems: neurological; musculoskeletal; special sense organs; respiratory, including speech organs; cardiovascular, reproductive; digestive; genito-urinary; hemic and lymphatic; skin; and endocrine; or (ii) any mental or psychological disorder, such as mental retardation, organic brain syndrome, emotional or mental illness, and specific learning disabilities. The term *physical or mental impairment* includes, but is not limited to, such diseases and conditions as orthopedic, visual, speech, and hearing impairments; cerebral palsy; epilepsy; muscular dystrophy; multiple sclerosis; cancer; heart disease; mental retardation; emotional illness; drug addiction; and alcoholism.

(b) *Major life activities* means functions such as caring for one's self, performing manual tasks, walking, seeing, hearing, speaking, breathing, learning, and working.

(c) *Has a record of such an impairment* means has a history of, or has been classified, or misclassified, as having a mental or physical impairment that substantially limits one or more major life activities.

(d) *Is regarded as having an impairment* means:

(1) Has a physical or mental impairment that does not substantially limit major life activities but that is treated by a recipient as constituting such a limitation;

(2) Has a physical or mental impairment that substantially limits major

life activity only as a result of the attitudes of others toward such an impairment; or

(3) Has none of the impairments set forth in paragraph (1) of this definition, but is treated by a recipient as having such an impairment.

Head of Operating Administration means the head of an operating administration within the Department (U.S. Coast Guard, Federal Highway Administration, Federal Aviation Administration, Federal Railroad Administration, National Highway Traffic Safety Administration, Federal Transit Administration, and Research and Special Programs Administration) providing Federal financial assistance to the recipient.

Primary recipient means any recipient that is authorized or required to extend Federal financial assistance from the Department to another recipient for the purpose of carrying out a program.

Qualified handicapped person means:

(1) With respect to employment, a handicapped person who, with reasonable accommodation and within normal safety requirements, can perform the essential functions of the job in question, but the term does not include any individual who is an alcoholic or drug abuser whose current use of alcohol or drugs prevents such person from performing the duties of the job in question or whose employment, by reason of such current alcohol or drug abuse, would constitute a direct threat to property or the safety of others; and

(2) With respect to other activities, a handicapped person who meets the essential eligibility requirements for the receipt of such services.

Recipient means any State, territory, possession, the District of Columbia, or Puerto Rico, or any political subdivision thereof, or instrumentality thereof, any public or private agency, institution, organization, or other entity, or any individual in any State, territory, possession, the District of Columbia, or Puerto Rico, to whom Federal financial assistance from the Department is extended directly or through another recipient, for any Federal program, including any successor, assignee, or transferee thereof, but such term does not include any ultimate beneficiary under any such program.

Secretary means the Secretary of Transportation.

Section 504 means section 504 of the Act.

Special service system means a transportation system specifically designed to serve the needs of persons who, by reason of disability, are physically unable to use bus systems designed for use by the general public. Special service is characterized by the use of vehicles smaller than a standard transit bus which are usable by handicapped persons, demand-responsive service, point of origin to point of destination service, and flexible routing and scheduling.

[44 FR 31468, May 31, 1979, as amended by Amdt. 1, 46 FR 37492, July 20, 1981; Amdt. 27–3, 51 FR 19017, May 23, 1986; 56 FR 45621, Sept. 6, 1991; 61 FR 32354, June 24, 1996; 61 FR 56424, Nov. 1, 1996]

§ 27.7 Discrimination prohibited.

(a) *General.* No qualified handicapped person shall, solely by reason of his disability, be excluded from participation in, be denied the benefits of, or otherwise be subjected to discrimination under any program or activity that receives or benefits from Federal financial assistance administered by the Department of Transportation.

(b) *Discriminatory actions prohibited.* (1) A recipient, in providing any aid, benefit, or service, may not, directly or through contractual, licensing, or other arrangements, on the basis of disability:

(i) Deny a qualified handicapped person the opportunity to participate in or benefit from the aid, benefit, or service;

(ii) Afford a qualified handicapped person an opportunity to participate in or benefit from the aid, benefit, or service that is not substantially equal to that afforded persons who are not handicapped;

(iii) Provide a qualified handicapped person with an aid, benefit, or service that is not as effective in affording equal opportunity to obtain the same result, to gain the same benefit, or to reach the same level of achievement as persons who are not handicapped;

(iv) Provide different or separate aid, benefits, or services to handicapped persons or to any class of handicapped

persons unless such action is necessary to provide qualified handicapped persons with aid, benefits or services that are as effective as those provided to persons who are not handicapped;

(v) Aid or perpetuate discrimination against a qualified handicapped person by providing financial or other assistance to an agency, organization, or person that discriminates on the basis of disability in providing any aid, benefit, or service to beneficiaries of the recipient's program;

(vi) Deny a qualified handicapped person the opportunity to participate in conferences, in planning or advising recipients, applicants or would-be applicants, or

(vii) Otherwise limit a qualified handicapped person in the enjoyment of any right, privilege, advantage, or opportunity enjoyed by others receiving an aid, benefit, or service.

(2) For purposes of this part, aids, benefits, and services, to be equally effective, are not required to produce the identical result or level of achievement for handicapped and nonhandicapped persons, but must afford handicapped persons equal opportunity to obtain the same result, to gain the same benefit, or to reach the same level of achievement, in the most integrated setting that is reasonably achievable.

(3) Even if separate or different programs or activities are available to handicapped persons, a recipient may not deny a qualified handicapped person the opportunity to participate in the programs or activities that are not separate or different.

(4) A recipient may not, directly or through contractual or other arrangements, utilize criteria or methods of administration:

(i) That have the effect of subjecting qualified handicapped persons to discrimination on the basis of disability,

(ii) That have the purpose or effect of defeating or substantially reducing the likelihood that handicapped persons can benefit by the objectives of the recipient's program, or

(iii) That yield or perpetuate discrimination against another recipient if both recipients are subject to common administrative control or are agencies of the same State.

(5) In determining the site or location of a facility, an applicant or a recipient may not make selections:

(i) That have the effect of excluding handicapped persons from, denying them the benefits of, or otherwise subjecting them to discrimination under any program or activity that receives or benefits from Federal financial assistance, or

(ii) That have the purpose or effect of defeating or substantially impairing the accomplishment of the objectives of the program or activity with respect to handicapped persons.

(6) As used in this section, the aid benefit, or service provided under a program or activity receiving or benefitting from Federal financial assistance includes any aid, benefit, or service provided in or through a facility that has been constructed, expanded, altered, leased or rented, or otherwise acquired, in whole or in part, with Federal financial assistance.

(c) *Communications.* Recipients shall take appropriate steps to ensure that communications with their applicants, employees, and beneficiaries are available to persons with impaired vision and hearing.

(d) *Programs limited by Federal law.* In programs authorized by Federal statute or executive order that are designed especially for the handicapped, or for a particular class of handicapped persons, the exclusion of nonhandicapped or other classes of handicapped persons is not prohibited by this part.

§27.9 Assurance required.

(a) *General.* Each application for Federal financial assistance to carry out a program to which this part applies, and each application to provide a facility, shall, as a condition to approval or extension of any Federal financial assistance pursuant to the application, contain, or be accompanied by, written assurance that the program will be conducted or the facility operated in compliance with all the requirements imposed by or pursuant to this part. An applicant may incorporate these assurances by reference in subsequent applications to the Department.

(b) *Future effect of assurances.* Recipients of Federal financial assistance, and transferees of property obtained by

a recipient with the participation of Federal financial assistance, are bound by the recipient's assurance under the following circumstances:

(1) When Federal financial assistance is provided in the form of a conveyance of real property or an interest in real property from the Department of Transportation to a recipient, the instrument of conveyance shall include a convenant running with the land binding the recipient and subsequent transferees to comply with the requirements of this part for so long as the property is used for the purpose for which the Federal financial assistance was provided or for a similar purpose.

(2) When Federal financial assistance is used by a recipient to purchase or improve real property, the assurance provided by the recipient shall obligate the recipient to comply with the requirements of this part and require any subsequent transferee of the property, who is using the property for the purpose for which the Federal financial assistance was provided, to agree in writing to comply with the requirements of this part. The obligations of the recipient and transferees under this part shall continue in effect for as long as the property is used for the purpose for which Federal financial assistance was provided or for a similar purpose.

(3) When Federal financial assistance is provided to the recipient in the form of, or is used by the recipient to obtain, personal property, the assurance provided by the recipient shall obligate the recipient to comply with the requirements of this part for the period it retains ownership or possession of the property or the property is used by a transferee for purposes directly related to the operations of the recipient.

(4) When Federal financial assistance is used by a recipient for purposes other than to obtain property, the assurance provided shall obligate the recipient to comply with the requirements of this part for the period during which the Federal financial assistance is extended to the program.

§ 27.11 Remedial action, voluntary action and compliance planning.

(a) *Remedial action.* (1) If the responsible Departmental official finds that a qualified handicapped person has been excluded from participation in, denied the benefits of, or otherwise subjected to discrimination under, any program or activity in violation of this part, the recipient shall take such remedial action as the responsible Departmental official deems necessary to overcome the effects of the violation.

(2) Where a recipient is found to have violated this part, and where another recipient exercises control over the recipient that has violated this part, the responsible Departmental official, where appropriate, may require either or both recipients to take remedial action.

(3) The responsible Departmental official may, where necessary to overcome the effects of a violation of this part, require a recipient to take remedial action:

(i) With respect to handicapped persons who are no longer participants in the recipient's program but who were participants in the program when such discrimination occurred, and

(ii) With respect to handicapped persons who would have been participants in the program had the discrimination not occurred.

(b) *Voluntary action.* A recipient may take steps, in addition to any action that is required by this part, to assure the full participation in the recipient's program or activity by qualified handicapped persons.

(c) *Compliance planning.* (1) A recipient shall, within 90 days from the effective date of this part, designate and forward to the head of any operating administration providing financial assistance, with a copy to the responsible Departmental official the names, addresses, and telephone numbers of the persons responsible for evaluating the recipient's compliance with this part.

(2) A recipient shall, within 180 days from the effective date of this part, after consultation at each step in paragraphs (c)(2) (i)–(iii) of this section with interested persons, including handicapped persons and organizations representing the handicapped:

(i) Evaluate its current policies and practices for implementing these regulations, and notify the head of the operating administration of the completion of this evaluation;

(ii) Identify shortcomings in compliance and describe the methods used to remedy them;

(iii) Begin to modify, with official approval of recipient's management, any policies or practices that do not meet the requirements of this part according to a schedule or sequence that includes milestones or measures of achievement. These modifications shall be completed within one year from the effective date of this part;

(iv) Take appropriate remedial steps to eliminate the effects of any discrimination that resulted from previous policies and practices; and

(v) Establish a system for periodically reviewing and updating the evaluation.

(3) A recipient shall, for at least three years following completion of the evaluation required under paragraph (c)(2) of this section, maintain on file, make available for public inspection, and furnish upon request to the head of the operating administration:

(i) A list of the interested persons consulted;

(ii) A description of areas examined and any problems indentified; and

(iii) A description of any modifications made and of any remedial steps taken.

§27.13 Designation of responsible employee and adoption of grievance procedures.

(a) *Designation of responsible employee.* Each recipient that employs fifteen or more persons shall, within 90 days of the effective date of this regulation, forward to the head of the operating administration that provides financial assistance to the recipient, with a copy to the responsible Departmental official, the name, address, and telephone number of at least one person designated to coordinate its efforts to comply with this part. Each such recipient shall inform the head of the operating administration of any subsequent change.

(b) *Adoption of complaint procedures.* A recipient that employs fifteen or more persons shall, within 180 days, adopt and file with the head of the operating administration procedures that incorporate appropriate due process standards and provide for the prompt and equitable resolution of complaints alleging any action prohibited by this part.

§27.15 Notice.

(a) A recipient shall take appropriate initial and continuing steps to notify participants, beneficiaries, applicants, and employees, including those with impaired vision or hearing, and unions or professional organizations holding collective bargaining or professional agreements with the recipient, that it does not discriminate on the basis of disability. The notification shall state, where appropriate, that the recipient does not discriminate in admission or access to, or treatment or employment in, its programs or activities. The notification shall also include an identification of the responsible employee designated pursuant to §27.13(a). A recipient shall make the initial notification required by this section within 90 days of the effective date of this part. Methods of initial and continuing notification may include the posting of notices, publication in newspapers and magazines, placement of notices in recipients' publications and distribution of memoranda or other written communications.

(b) If a recipient publishes or uses recruitment materials or publications containing general information that it makes available to participants, beneficiaries, applicants, or employees, it shall include in those materials or publications a statement of the policy described in paragraph (a) of this section. A recipient may meet the requirement of this paragraph either by including appropriate inserts in existing materials and publications or by revising and reprinting the materials and publications. In either case, the addition or revision must be specially noted.

§27.17 Effect of State or local law.

The obligation to comply with this part is not obviated or affected by any State or local law.

§27.19 Compliance with Americans with Disabilities Act requirements and FTA policy.

(a) Recipients subject to this part (whether public or private entities as defined in 49 CFR part 37) shall comply with all applicable requirements of the

Americans with Disabilities Act (ADA) of 1990 (42 U.S.C. 12101–12213) including the Department's ADA regulations (49 CFR parts 37 and 38), the regulations of the Department of Justice implementing titles II and III of the ADA (28 CFR parts 35 and 36), and the regulations of the Equal Employment Opportunity Commission (EEOC) implementing title I of the ADA (29 CFR part 1630). Compliance with the EEOC title I regulations is required as a condition of compliance with section 504 for DOT recipients even for organizations which, because they have fewer than 25 or 15 employees, would not be subject to the EEOC regulation in its own right. Compliance with all these regulations is a condition of receiving Federal financial assistance from the Department of Transportation. Any recipient not in compliance with this requirement shall be subject to enforcement action under subpart F of this part.

(b) Consistent with FTA policy, any recipient of Federal financial assistance from the Federal Transit Administration whose solicitation was made before August 26, 1990, and is for one or more inaccessible vehicles, shall provide written notice to the Secretary (e.g., in the case of a solicitation made in the past under which the recipient can order additional new buses after the effective date of this section). The Secretary shall review each case individually, and determine whether the Department will continue to participate in the Federal grant, consistent with the provisions in the grant agreement between the Department and the recipient.

[55 FR 40763, Oct. 4, 1990, as amended at 56 FR 45621, Sept. 6, 1991; 61 FR 32354, June 24, 1996]

Subpart B—Program Accessibility Requirements in Specific Operating Administration Programs: Airports, Railroads, and Highways

§ 27.71 Airport facilities.

(a) This section applies to all terminal facilities and services owned, leased, or operated on any basis by a recipient of DOT financial assistance at a commercial service airport, including parking and ground transportation facilities.

(b) Airport operators shall ensure that the terminal facilities and services subject to this section shall be readily accessible to and usable by individuals with disabilities, including individuals who use wheelchairs. Airport operators shall be deemed to comply with this section 504 obligation if they meet requirements applying to state and local government programs and facilities under Department of Justice (DOJ) regulations implementing Title II of the Americans with Disabilities Act (ADA).

(c) The airport shall ensure that there is an accessible path between the gate and the area from which aircraft are boarded.

(d) Systems of inter-terminal transportation, including, but not limited to, shuttle vehicles and people movers, shall comply with applicable requirements of the Department of Transportation's ADA rules.

(e) The Americans with Disabilities Act Accessibility Guidelines (ADAAGs), including section 10.4 concerning airport facilities, shall be the standard for accessibility under this section.

(f) Contracts or leases between carriers and airport operators concerning the use of airport facilities shall set forth the respective responsibilities of the parties for the provision of accessible facilities and services to individuals with disabilities as required by this part and applicable ADA rules of the Department of Transportation and Department of Justice for airport operators and applicable Air Carrier Access Act rules (49 CFR part 382) for carriers.

(g) If an airport operator who receives Federal financial assistance for an existing airport facility has not already done so, the recipient shall submit a transition plan meeting the requirements of § 27.65(d) of this part to the FAA no later than March 3, 1997.

[61 FR 56424, Nov. 1, 1996]

§ 27.72 Boarding assistance for small aircraft.

(a) Paragraphs (b) and (c) of this section apply to airports with 10,000 or more annual enplanements.

(b) Airports shall, in cooperation with carriers serving the airports, provide boarding assistance to individuals with disabilities using mechanical lifts, ramps, or other devices that do not require employees to lift or carry passengers up stairs.

(c)(1) Each airport operator shall negotiate in good faith with each carrier serving the airport concerning the acquisition and use of boarding assistance devices. The airport operator and the carrier(s) shall, by no later than September 2, 1997, sign a written agreement allocating responsibility for meeting the boarding assistance requirements of this section between or among the parties. The agreement shall be made available, on request, to representatives of the Department of Transportation.

(2) The agreement shall provide that all actions necessary to ensure accessible boarding for passengers with disabilities are completed as soon as practicable, but no later than December 2, 1998 at large and medium commercial service hub airports (those with 1,200,000 or more annual enplanements); December 2, 1999 for small commercial service hub airports (those with between 250,000 and 1,199,999 annual enplanements); or December 4, 2000 for non-hub commercial service primary airports (those with between 10,000 and 249,999 annual enplanements). All air carriers and airport operators involved are jointly responsible for the timely and complete implementation of the agreement.

(3) Boarding assistance under the agreement is not required in the following situations:

(i) Access to aircraft with a capacity of fewer than 19 or more than 30 seats;

(ii) Access to float planes;

(iii) Access to the following 19-seat capacity aircraft models: the Fairchild Metro, the Jetstream 31, and the Beech 1900 (C and D models);

(iv) Access to any other 19-seat aircraft model determined by the Department of Transportation to be unsuitable for boarding assistance by lift on the basis of a significant risk of serious damage to the aircraft or the presence of internal barriers that preclude passengers who use a boarding or aisle chair to reach a non-exit row seat.

(4) When boarding assistance is not required to be provided under paragraph (c)(4) of this section, or cannot be provided as required by paragraphs (b) and (c) of this section for reasons beyond the control of the parties to the agreement (e.g., because of mechanical problems with a lift), boarding assistance shall be provided by any available means to which the passenger consents, except hand-carrying as defined in §382.39(a)(2) of this part.

(5) The agreement shall ensure that all lifts and other accessibility equipment are maintained in proper working condition.

(d) In the event that airport personnel are involved in providing boarding assistance, the airport shall ensure that they are trained to proficiency in the use of the boarding assistance equipment used at the airport and appropriate boarding assistance procedures that safeguard the safety and dignity of passengers.

[61 FR 56424, Nov. 1, 1996; 62 FR 17, Jan. 2, 1997]

§27.75 Federal Highway Administration—highways.

(a) *New facilities*—(1) *Highway rest area facilities.* All such facilities that will be constructed with Federal financial assistance shall be designed and constructed in accordance with the accessibility standards referenced in §27.3(b) of this part.

(2) *Curb cuts.* All pedestrian crosswalks constructed with Federal financial assistance shall have curb cuts or ramps to accommodate persons in wheelchairs, pursuant to section 228 of the Federal-Aid Highway Act of 1973 (23 U.S.C. 402(b)(1)(F)).

(3) *Pedestrian over-passes, under-passes and ramps.* Pedestrian over-passes, under-passes and ramps, constructed with Federal financial assistance, shall be accessible to handicapped persons, including having gradients no steeper than 10 percent, unless:

(i) Alternate safe means are provided to enable mobility-limited persons to cross the roadway at that location; or

(ii) It would be infeasible for mobility-limited persons to reach the over-passes, under-passes or ramps because

of unusual topographical or architectural obstacles unrelated to the federally assisted facility.

(b) *Existing facilities—Rest area facilities.* Rest area facilities on Interstate highways shall be made accessible to handicapped persons, including wheelchair users, within a three-year period after the effective date of this part. Other rest area facilities shall be made accessible when Federal financial assistance is used to improve the rest area, or when the roadway adjacent to or in the near vicinity of the rest area is constructed, reconstructed or otherwise altered with Federal financial assistance.

[44 FR 31468, May 31, 1979, as amended by Amdt. 27–3, 51 FR 19017, May 23, 1986. Redesignated at 56 FR 45621, Sept. 6, 1991]

§ 27.77 Recipients of Essential Air Service subsidies.

Any air carrier receiving Federal financial assistance from the Department of Transportation under the Essential Air Service program shall, as a condition of receiving such assistance, comply with applicable requirements of this part and applicable section 504 and ACAA rules of the Department of Transportation.

[61 FR 56425, Nov. 1, 1996]

Subpart C—Enforcement

SOURCE: 44 FR 31468, May 31, 1979. Redesignated at 56 FR 45621, Sept. 6, 1991.

§ 27.121 Compliance information.

(a) *Cooperation and assistance.* The responsible Departmental official, to the fullest extent practicable, seeks the cooperation of recipients in securing compliance with this part and provides assistance and guidance to recipients to help them comply with this part.

(b) *Compliance reports.* Each recipient shall keep on file for one year all complaints of noncompliance received. A record of all such complaints, which may be in summary form, shall be kept for five years. Each recipient shall keep such other records and submit to the responsible Departmental official or his/her designee timely, complete, and accurate compliance reports at such times, and in such form, and containing such information as the responsible Department official may prescribe. In the case of any program under which a primary recipient extends Federal financial assistance to any other recipient, the other recipient shall also submit compliance reports to the primary recipient so as to enable the primary recipient to prepare its report.

(c) *Access to sources of information.* Each recipient shall permit access by the responsible Departmental official or his/her designee during normal business hours to books, records, accounts, and other sources of information, and to facilities that are pertinent to compliance with this part. Where required information is in the exclusive possession of another agency or person who fails or refuses to furnish the information, the recipient shall so certify in its report and describe the efforts made to obtain the information. Considerations of privacy or confidentiality do not bar the Department from evaluating or seeking to enforce compliance with this part. Information of a confidential nature obtained in connection with compliance evaluation or enforcement is not disclosed by the Department, except in formal enforcement proceedings, where necessary, or where otherwise required by law.

(d) *Information to beneficiaries and participants.* Each recipient shall make available to participants, beneficiaries, and other interested persons such information regarding the provisions of this regulation and its application to the program for which the recipient receives Federal financial assistance, and make such information available to them in such manner, as the responsible Departmental official finds necessary to apprise them of the protections against discrimination provided by the Act and this part.

§ 27.123 Conduct of investigations.

(a) *Periodic compliance reviews.* The responsible Departmental official or his/her designee, from time to time, reviews the practices of recipients to determine whether they are complying with this part.

(b) *Complaints.* Any person who believes himself/herself or any specific class of individuals to be harmed by

failure to comply with this part may, personally or through a representative, file a written complaint with the responsible Departmental official. A Complaint must be filed not later than 180 days from the date of the alleged discrimination, unless the time for filing is extended by the responsible Departmental official or his/her designee.

(c) *Investigations.* The responsible Departmental official or his/her designee makes a prompt investigation whenever a compliance review, report, complaint, or any other information indicates a possible failure to comply with this part. The investigation includes, where appropriate, a review of the pertinent practices and policies of the recipient, and the circumstances under which the possible noncompliance with this part occurred.

(d) *Resolution of matters.* (1) If, after an investigation pursuant to paragraph (c) of this section, the responsible Departmental official finds reasonable cause to believe that there is a failure to comply with this part, the responsible Departmental official will inform the recipient. The matter is resolved by informal means whenever possible. If the responsible Departmental official determines that the matter cannot be resolved by informal means, action is taken as provided in § 27.125.

(2) If an investigation does not warrant action pursuant to paragraph (d)(1) of this section, the responsible Departmental official or his/her designee so informs the recipient and the complainant, if any, in writing.

(e) *Intimidating and retaliatory acts prohibited.* No employee or contractor of a recipient shall intimidate, threaten, coerce, or discriminate against any individual for the purpose of interfering with any right or privilege secured by section 504 of the Act or this part, or because the individual has made a complaint, testified, assisted, or participated in any manner in an investigation, hearing, or proceeding, under this part. The identity of complainants is kept confidential at their election during the conduct of any investigation, hearing or proceeding under this part. However, when such confidentiality is likely to hinder the investigation, the complainant will be advised for the purpose of waiving the privilege.

§ 27.125 Compliance procedure.

(a) *General.* If there is reasonable cause for the responsible Departmental official to believe that there is a failure to comply with any provision of this part that cannot be corrected by informal means, the responsible Departmental official may recommend suspension or termination of, or refusal to grant or to continue Federal financial assistance, or take any other steps authorized by law. Such other steps may include, but are not limited to:

(1) A referral to the Department of Justice with a recommendation that appropriate proceedings be brought to enforce any rights of the United States under any law of the United States (including other titles of the Act), or any assurance or other contractural undertaking; and

(2) Any applicable proceeding under State or local law.

(b) *Refusal of Federal financial assistance.* (1) No order suspending, terminating, or refusing to grant or continue Federal financial assistance becomes effective until:

(i) The responsible Departmental official has advised the applicant or recipient of its failure to comply and has determined that compliance cannot be secured by voluntary means; and

(ii) There has been an express finding by the Secretary on the record, after opportunity for hearing, of a failure by the applicant or recipient to comply with a requirement imposed by or pursuant to this part.

(2) Any action to suspend, terminate, or refuse to grant or to continue Federal financial assistance is limited to the particular recipient who has failed to comply, and is limited in its effect to the particular program, or part thereof, in which noncompliance has been found.

(c) *Other means authorized by law.* No other action is taken until:

(1) The responsible Departmental official has determined that compliance cannot be secured by voluntary means;

(2) The recipient or other person has been notified by the responsible Departmental official of its failure to comply and of the proposed action;

(3) The expiration of at least 10 days from the mailing of such notice to the recipient or other person. During this period, additional efforts are made to persuade the recipient or other person to comply with the regulations and to take such corrective action as may be appropriate.

§ 27.127 Hearings.

(a) *Opportunity for hearing.* Whenever an opportunity for a hearing is required by § 27.125(b), reasonable notice is given by the responsible Departmental official by registered or certified mail, return receipt requested, to the affected applicant or recipient. This notice advises the applicant or recipient of the action proposed to be taken, the specific provision under which the proposed action is to be taken, and the matters of fact or law asserted as the basis for this action, and either:

(1) Fixes a date not less than 20 days after the date of such notice within which the applicant or recipient may request a hearing; or

(2) Advises the applicant or recipient that the matter in question has been set for hearing at a stated place and time.

The time and place shall be reasonable and subject to change for cause. The complainant, if any, also is advised of the time and place of the hearing. An applicant or recipient may waive a hearing and submit written information and argument for the record. The failure of an applicant or recipient to request a hearing constitutes a waiver of the right to a hearing under section 504 of the Act and § 27.125(b), and consent to the making of a decision on the basis of such information as may be part of the record.

(b) If the applicant or recipient waives its opportunity for a hearing, the responsible Departmental official shall notify the applicant or recipient that it has the opportunity to submit written information and argument for the record. The responsible Departmental official may also place written information and argument into the record.

(c) *Time and place of hearing.* Hearings are held at the office of the Department in Washington, DC, at a time fixed by the responsible Departmental official unless he/she determines that the convenience of the applicant or recipient or of the Department requires that another place be selected. Hearings are held before an Administrative Law Judge designated in accordance with 5 U.S.C. 3105 and 3344 (section 11 of the Administrative Procedure Act).

(d) *Right to counsel.* In all proceedings under this section, the applicant or recipient and the responsible Departmental official have the right to be represented by counsel.

(e) *Procedures, evidence and record.* (1) The hearing, decision, and any administrative review thereof are conducted in conformity with sections 554 through 557 of title 5 of the United States Code, and in accordance with such rules of procedure as are proper (and not inconsistent with this section) relating to the conduct of the hearing, giving notice subsequent to those provided for in paragraph (a) of this section, taking testimony, exhibits, arguments and briefs, requests for findings, and other related matters. The responsible Departmental official and the applicant or recipient are entitled to introduce all relevant evidence on the issues as stated in the notice for hearing or as determined by the officer conducting the hearing. Any person (other than a government employee considered to be on official business) who, having been invited or requested to appear and testify as a witness on the government's behalf, attends at a time and place scheduled for a hearing provided for by this part may be reimbursed for his/her travel and actual expenses in an amount not to exceed the amount payable under the standardized travel regulations applicable to a government employee traveling on official business.

(2) Technical rules of evidence do not apply to hearings conducted pursuant to this part, but rules or principles designed to assure production of the most credible evidence available and to subject testimony to cross examination are applied where reasonably necessary by the Administrative Law Judge conducting the hearing. The Administrative Law Judge may exclude irrelevant,

immaterial, or unduly repetitious evidence. All documents and other evidence offered or taken for the record are open to examination by the parties and opportunity is given to refute facts and arguments advanced by either side. A transcript is made of the oral evidence except to the extent the substance thereof is stipulated for the record. All decisions are based on the hearing record and written findings shall be made.

(f) *Consolidation or joint hearings.* In cases in which the same or related facts are asserted to constitute noncompliance with this regulation with respect to two or more programs to which this part applies, or noncompliance with this part and the regulations of one or more other Federal departments or agencies issued under section 504 of the Act, the responsible Departmental official may, in agreement with such other departments or agencies, where applicable, provide for consolidated or joint hearings. Final decisions in such cases, insofar as this regulation is concerned, are made in accordance with § 27.129.

§ 27.129 Decisions and notices.

(a) *Decisions by Administrative Law Judge.* After the hearing, the Administrative Law Judge certifies the entire record including his recommended findings and proposed decision to the Secretary for a final decision. A copy of the certification is mailed to the applicant or recipient and to the complainant, if any. The responsible Departmental official and the applicant or recipient may submit written arguments to the Secretary concerning the Administrative Law Judge's recommended findings and proposed decision.

(b) *Final decision by the Secretary.* When the record is certified to the Secretary by the Administrative Law Judge, the Secretary reviews the record and accepts, rejects, or modifies the Administrative Law Judge's recommended findings and proposed decision, stating the reasons therefor.

(c) *Decisions if hearing is waived.* Whenever a hearing pursuant to § 27.125(b) is waived, the Secretary makes his/her final decision on the record, stating the reasons therefor.

(d) *Rulings required.* Each decision of the Administrative Law Judge or the Secretary contains a ruling on each finding or conclusion presented and specifies any failures to comply with this part.

(e) *Content of orders.* The final decision may provide for suspension or termination, or refusal to grant or continue Federal financial assistance, in whole or in part, under the program involved. The decision may contain such terms, conditions, and other provisions as are consistent with and will effectuate the purposes of the Act and this part, including provisions designed to assure that no Federal financial assistance will thereafter be extended unless and until the recipient corrects its noncompliance and satisfies the Secretary that it will fully comply with this part.

(f) *Subsequent proceedings.* (1) An applicant or recipient adversely affected by an order issued under paragraph (e) of this section is restored to full eligibility to receive Federal financial assistance if it satisfies the terms and conditions of that order or if it brings itself into compliance with this part and provides reasonable assurance that it will fully comply with this part.

(2) Any applicant or recipient adversely affected by an order entered pursuant to paragraph (e) of this section may, at any time, request the responsible Departmental official to restore its eligibility, to receive Federal financial assistance. Any request must be supported by information showing that the applicant or recipient has met the requirements of paragraph (f)(1) of this section. If the responsible Departmental official determines that those requirements have been satisfied, he/she may restore such eligibility, subject to the approval of the Secretary.

(3) If the responsible Departmental official denies any such request, the applicant or recipient may submit a request, in writing, for a hearing specifying why it believes the responsible Departmental official should restore it to full eligibility. It is thereupon given a prompt hearing, with a decision on the record. The applicant or recipient is restored to eligibility if it demonstrates to the satisfaction of the

Secretary at the hearing that it satisfied the requirements of paragraph (f)(1) of this section.

(4) The hearing procedures of §27.127(b) through (c) and paragraphs (a) through (d) of this section apply to hearings held under paragraph (f)(3) of this section.

(5) While proceedings under this paragraph are pending, the sanctions imposed by the order issued under paragraph (e) of this section shall remain in effect.

PART 28—ENFORCEMENT OF NONDISCRIMINATION ON THE BASIS OF HANDICAP IN PROGRAMS OR ACTIVITIES CONDUCTED BY THE DEPARTMENT OF TRANSPORTATION

Sec.
28.101 Purpose.
28.102 Application.
28.103 Definitions.
28.104–28.109 [Reserved]
28.110 Self-evaluation.
28.111 Notice.
28.112–28.129 [Reserved]
28.130 General prohibition against discrimination.
28.131 Illegal use of drugs.
28.132–28.139 [Reserved]
28.140 Employment.
28.141–28.148 [Reserved]
28.149 Program accessibility: Discrimination prohibited.
28.150 Program accessibility: Existing facilities.
28.151 Program accessibility: New construction and alterations.
28.152–28.159 [Reserved]
28.160 Communications.
28.161–28.169 [Reserved]
28.170 Compliance procedures.
28.171–28.999 [Reserved]

AUTHORITY: 29 U.S.C. 794

SOURCE: 56 FR 37296, Aug. 6, 1991, unless otherwise noted.

§28.101 Purpose.

The purpose of this part is to carry out section 119 of the Rehabilitation, Comprehensive Services, and Developmental Disabilities Amendments of 1978, which amended section 504 of the Rehabilitation Act of 1973 to prohibit discrimination on the basis of handicap in programs or activities conducted by Executive agencies, including this Department, or the United States Postal Service. 49 CFR part 27 implements section 504 in the Department's financial assistance programs.

§28.102 Application.

This part applies to all programs or activities conducted by the Department except for programs and activities conducted outside the United States that do not involve individuals with handicaps in the United States.

§28.103 Definitions.

For purposes of this part, the term—

Assistant Attorney General means the Assistant Attorney General, Civil Rights Division, United States Department of Justice.

Auxiliary aids means services or devices that enable persons with impaired sensory, manual, or speaking skills to have an equal opportunity to participate in, and enjoy the benefits of, programs or activities conducted by the Department. For example, auxiliary aids useful for persons with impaired vision include readers, Brailled materials, audio recordings, and other similar services and devices. Auxiliary aids useful for persons with impaired hearing include telephone handset amplifiers, telephones compatible with hearing aids, telecommunication devices for deaf persons (TDD's), interpreters, notetakers, written materials, and other similar services and devices.

Complete complaint means a written statement that contains the complainant's name and address and describes the Department's alleged discriminatory actions in sufficient detail to inform the Department of the nature and date of the alleged violation of section 504. It shall be signed by the complainant or by someone authorized to do so on his or her behalf. Complaints filed on behalf of classes or third parties shall describe or identify (by name, if possible) the alleged victims of discrimination.

Current illegal use of drugs means illegal use of drugs that occurred recently enough to justify a reasonable belief that a person's drug use is current or that continuing use is a real and ongoing problem.

Drug means a controlled substance, as defined in schedules I through V of

section 202 of the Controlled Substances Act (21 U.S.C. 812).

Department or *DOT* means the U.S. Department of Transportation, including the Office of the Secretary and all operating administrations.

Departmental Element (or ''DOT element'') means any one of the following organizations within the Department:

(a) Office of the Secretary (OST).

(b) United States Coast Guard (USCG).

(c) Federal Aviation Administration (FAA).

(d) Federal Highway Administration (FHWA).

(e) Federal Railroad Administration (FRA).

(f) National Highway Traffic Safety Administration (NHTSA).

(g) Federal Transit Administration (FTA).

(h) Research and Special Programs Administration (RSPA).

(i) Maritime Administration (MARAD).

(j) St. Lawrence Seaway Development Corporation (SLSDC).

Facility means all or any portion of buildings, structures, equipment, roads, walks, parking lots, rolling stock or other conveyances, or other real or personal property.

Illegal use of drugs means the use of one or more drugs, the possession or distribution of which is unlawful under the Controlled Substances Act (21 U.S.C. 812) The term ''illegal use of drugs'' does not include the use of a drug taken under supervision by a licensed health care professional, or other uses authorized by the Controlled Substances Act or other provisions of Federal law.

Individual with handicaps means any person who has a physical or mental impairment that substantially limits one or more major life activities, has a record of such an impairment, or is regarded as having such an impairment.

As used in this definition, the phrase:

(1) *Physical or mental impairment*—

(i) Includes any physiological disorder or condition, cosmetic disfigurement, or anatomical loss affecting one or more of the following body systems: Neurological; muscular; skeletal; special sense organs; respiratory, including speech organs; cardiovascular; reproductive; digestive; genitourinary; hemic and lymphatic; skin; and endocrine;

(ii) Includes any mental or psychological disorder, such as mental retardation, organic brain syndrome, emotional or mental illness, and specific learning disabilities; and

(iii) Includes, but is not limited to, such diseases or conditions as orthopedic, visual, speech, and hearing impairments, cerebral palsy, epilepsy, muscular dystrophy, multiple sclerosis, cancer, heart disease, diabetes, mental retardation, emotional illness, drug addiction, and alcoholism.

(2) *Major life activities* includes functions such as caring for one's self, performing manual tasks, walking, seeing, hearing, speaking, breathing, learning, and working.

(3) *Has a record of such an impairment* means has a history of, or has been misclassified as having, a mental or physical impairment that substantially limits one or more major life activities.

(4) *Is regarded as having an impairment* means—

(i) Has a physical or mental impairment that does not substantially limit major life activities but is treated by the Department as constituting such a limitation;

(ii) Has a physical or mental impairment that substantially limits major life activities only as a result of the attitudes of others toward such impairment; or

(iii) Has none of the impairments defined in paragraph (1) of this definition but is treated by the Department as having such an impairment.

Qualified individual with handicaps means—

(1) With respect to education services provided by the U.S. Merchant Marine Academy or the U.S. Coast Guard Academy, an individual with handicaps who meets the essential eligibility requirements for participation in and receipt of such services, including the physical standards applicable to the U.S. Naval Reserve or the U.S. Coast Guard.

(2) With respect to any other Department program or activity under which a person is required to perform services

or to achieve a level of accomplishment, an individual with handicaps who meets the essential eligibility requirements and who can achieve the purpose of the program or activity without modifications in the program or activity that the Department can demonstrate would result in a fundamental alteration in its nature. The essential eligibility requirements include the ability to participate without endangering the safety of the individual or others.

(3) With respect to any other program or activity, an individual with handicaps who meets the essential eligibility requirements for participation in, or receipt of benefits from, that program or activity and

(4) *Qualified handicapped person* as that term is defined for purposes of employment in 29 CFR 1613.702(f), which is made applicable to this part by § 28.140.

Section 504 means section 504 of the Rehabilitation Act of 1973 (Pub. L. 93–112, 87 Stat. 394 (29 U.S.C. 794)), as amended by the Rehabilitation Act Amendments of 1974 (Pub. L. 93–516, 88 Stat. 1617), the Rehabilitation, Comprehensive Services, and Developmental Disabilities Amendments of 1978 (Pub. L. 95–602, 92 Stat. 2955); the Rehabilitation Act Amendments of 1986 (Pub. L. 99–506, 100 Stat. 1810); the Civil Rights Restoration Act of 1987 (Pub. L. 100–259, 102 Stat. 28), and Handicapped Program Technical Amendments Act of 1988 (Pub. L. 100–630, 102 Stat. 3312). As used in this part, section 504 applies only to programs or activities conducted by Executive agencies and not to federally assisted programs.

[56 FR 37296, Aug. 6, 1991, as amended at 61 FR 32354, June 24, 1996]

§§ 28.104–28.109 [Reserved]

§ 28.110 Self-evaluation.

(a) The Department shall, by one year of the effective date of this part, evaluate its current policies and practices, and effects thereof, that do not or may not meet the requirements of this part, and, to the extent modification of any such policies and practices is required, the Department shall proceed to make the necessary modifications.

(b) The Department shall provide an opportunity to interested persons, including individuals with handicaps, agency employees with handicaps, and organizations representing individuals with handicaps, to participate in the self-evaluation process by submitting comments (both oral and written).

(c) The Department shall, until at least three years following completion of the evaluation required under paragraph (a) of this section, or until such time as all modifications identified by the self-evaluation to be necessary to comply with section 504 have been completed, whichever occurs later, maintain on file and make available for public inspection—

(1) A description of areas examined, regulations and nonregulatory criteria reviewed, and any problems identified; and

(2) A description of any modifications made.

§ 28.111 Notice.

The Department shall make available to employees, applicants, participants, beneficiaries, and other interested persons such information regarding the provisions of this part and its applicability to the programs or activities conducted by the Department, and make such information available to them in such manner as the Department finds necessary to apprise such persons of the protections against discrimination assured them by section 504 and this regulation.

§§ 28.112–28.129 [Reserved]

§ 28.130 General prohibition against discrimination.

(a) No qualified individual with handicaps shall, on the basis of handicap, be excluded from participation in, be denied the benefits of, or otherwise be subjected to discrimination under any program or activity conducted by the Department.

(b)(1) The Department, in providing any aid, benefit, or service, may not, directly or through contractual, licensing, or other arrangement, on the basis of handicap—

(i) Deny a qualified individual with handicaps the opportunity to participate in or benefit from the aid, benefit, or service;

(ii) Afford a qualified individual with handicaps an opportunity to participate in or benefit from the aid, benefit, or service that is not equal to that afforded others;

(iii) Provide a qualified individual with handicaps with an aid, benefit, or service that is not as effective in affording equal opportunity to obtain the same result, to gain the same benefit, or to reach the same level of achievement as that provided to others;

(iv) Provide different or separate aid, benefits, or services to individuals with handicaps or to any class of individuals with handicaps than is provided to others unless such action is necessary to provide qualified individuals with handicaps with aid, benefits, or services that are as effective as those provided to others;

(v) Deny a qualified individual with handicaps the opportunity to participate as a member of planning or advisory boards; or

(vi) Otherwise limit a qualified individual with handicaps in the enjoyment of any right, privilege, advantage, or opportunity enjoyed by others receiving the aid, benefit, or service.

(2) The Department may not deny a qualified individual with handicaps the opportunity to participate in programs or activities that are not separate or different, despite the existence of permissibly separate or different programs or activities.

(3) The Department may not, directly or through contractual or other arrangements, utilize criteria or methods of administration the purpose or effect of which would—

(i) Subject qualified individuals with handicaps to discrimination on the basis of handicap; or

(ii) Defeat or substantially impair accomplishment of the objectives of a program or activity with respect to individuals with handicaps.

(4) The Department may not, in determining the site or location of a facility, make selections the purpose or effect of which would—

(i) Exclude individuals with handicaps from, deny them the benefits of, or otherwise subject them to discrimination under any program or activity conducted by the Department; or

(ii) Defeat or substantially impair the accomplishment of the objectives of a program or activity with respect to individuals with handicaps.

(5) The Department, in the selection of procurement contractors, may not use criteria that subject qualified individuals with handicaps to discrimination on the basis of handicap.

(6) The Department may not administer a licensing or certification program in a manner that subjects qualified individuals with handicaps to discrimination on the basis of handicap, nor may the Department establish requirements for the programs or activities of licensees or certified entities that subject qualified individuals with handicaps to discrimination on the basis of handicap. However, the programs or activities of entities that are licensed or certified by the Department are not, themselves, covered by this part. The Department may limit the programs or activities of a licensee or certificate holder, who is a qualified individual with handicaps, to the extent necessary to ensure the safety of that person or the safety of others.

(c) The exclusion of individuals without handicaps from the benefits of a program limited by Federal statute or Executive Order to individuals with handicaps or the exclusion of a specific class of individuals with handicaps from a program limited by Federal statute or Executive Order to a different class of individuals with handicaps is not prohibited by this part.

(d) The Department shall administer programs and activities in the most integrated setting appropriate to the needs of qualified individuals with handicaps.

§ 28.131 Illegal use of drugs.

(a) *General.* (1) Except as provided in paragraph (b) of this section, this part does not prohibit discrimination against an individual based on that individual's current illegal use of drugs.

(2) The agency shall not discriminate on the basis of illegal use of drugs against an individual who is not engaging in current illegal use of drugs and who—

(i) Has successfully completed a supervised drug rehabilitation program or has otherwise been rehabilitated successfully;

(ii) Is participating in a supervised rehabilitation program; or

(iii) Is erroneously regarded as engaging in such use.

(b) *Health and rehabilitation services.* The agency shall not deny health services or services provided under titles I, II, and III of the Rehabilitation Act to an individual on the basis of that individual's current illegal use of drugs, if the individual is otherwise entitled to such services.

(c) *Drug testing.* (1) This part does not prohibit the agency from adopting or administering reasonable policies or procedures, including but not limited to drug testing, designed to ensure that an individual who formerly engaged in the illegal use of drugs is not engaging in current illegal use of drugs.

(2) Nothing in paragraph (c) of this section shall be construed to encourage, prohibit, restrict, or authorize the conduct of testing for the illegal use of drugs.

§§ 28.132–28.139 [Reserved]

§ 28.140 Employment.

(a) No qualified individual with handicaps shall, on the basis of handicap, be subjected to discrimination in employment under any program or activity conducted by the Department.

(b) The definitions, requirements, and procedures of section 501 of the Rehabilitation Act of 1973 (29 U.S.C. 791), as established by the Equal Employment Opportunity Commission in 29 CFR part 1613, shall apply to employment in federally conducted programs or activities. The provisions of this section do not apply to military personnel of the U.S. Coast Guard.

§§ 28.141–28.148 [Reserved]

§ 28.149 Program accessibility: Discrimination prohibited.

Except as otherwise provided in § 28.150, no qualified individual with handicaps shall, because the Department's facilities are inaccessible to or unusable by individuals with handicaps, be denied the benefits of, be excluded from participation in, or otherwise be subjected to discrimination under any program or activity conducted by the Department.

§ 28.150 Program accessibility: Existing facilities.

(a) *General.* The Department shall operate each program or activity so that the program or activity, when viewed in its entirety, is readily accessible to and usable by individuals with handicaps. This paragraph does not—

(1) Necessarily require the Department to make each of its existing facilities accessible to and usable by individuals with handicaps;

(2) [Reserved]

(3) Require the Department to take any action that it can demonstrate would result in a fundamental alteration in the nature of a program or activity or in undue financial and administrative burdens. In those circumstances where personnel of a DOT element believe that the proposed action would fundamentally alter the program or activity or would result in undue financial and administrative burdens, the DOT element has the burden of proving that compliance with § 28.150(a) would result in such alteration or burdens. The decision that compliance would result in such alteration or burdens must be made by the Secretary or his or her designee, after considering all resources available for use in the funding and operation of the program or activity, and must be accompanied by a written statement of the reasons for reaching that conclusion. If an action would result in such an alteration or such burdens, the Department shall take any other action that would not result in such an alteration or such burdens but would nevertheless ensure that individuals with handicaps receive the benefits and services of the program or activity.

(b) *Methods.* The Department may comply with the requirements of this section through such means as redesign of equipment, reassignment of services to accessible buildings, assignment of aides to beneficiaries, home visits, delivery of services at alternate accessible sites, alteration of existing facilities and construction of new facilities, use of accessible rolling stock, or any other methods that result in making

its programs or activities readily accessible to and usable by individuals with handicaps. The Department is not required to make structural changes in existing facilities where other methods are effective in achieving compliance with this section. The Department, in making alterations to existing buildings, shall meet accessibility requirements to the extent compelled by the Architectural Barriers Act of 1968, as amended (42 U.S.C. 4151–4157), and any regulations implementing it. In choosing among available methods for meeting the requirements of this section, the Department shall give priority to those methods that offer programs and activities to qualified individuals with handicaps in the most integrated setting appropriate.

(c) *Time period for compliance.* The Department shall comply with the obligations established under this section within sixty days of the effective date of this part except that where structural changes in facilities are undertaken, such changes shall be made within three years of the effective date of this part, but in any event as expeditiously as possible. Provided that, where major restructuring of fixed facilities to accommodate technological changes is planned to occur within five years from the effective date of this part, changes needed to comply with this section are not required to be made until the planned restructuring takes place. However, alternative means for participation by individuals with handicaps in DOT programs and activities in the most integrated setting possible during this interim waiting period shall be available.

(d) *Transition plan.* In the event that structural changes to facilities will be undertaken to achieve program accessibility, the Department shall develop, within six months of the effective date of this part, a transition plan setting forth the steps necessary to complete such changes. The agency shall provide an opportunity to interested persons, including individuals with handicaps, agency employees with handicaps, or organizations representing individuals with handicaps, to participate in the development of the transition plan by submitting comments (both oral and written). A copy of the transition plan shall be made available for public inspection. The plan shall, at a minimum—

(1) Identify physical obstacles in the Department's facilities that limit the accessibility of its programs or activities to individuals with handicaps;

(2) Describe in detail the methods that will be used to make the facilities accessible;

(3) Specify the schedule for taking the steps necessary to achieve compliance with this section and, if the time period of the transition plan is longer than one year, identify steps that will be taken during each year of the transition period; and

(4) Indicate the official responsible for implementation of the plan.

§ 28.151 Program accessibility: New construction and alterations.

Each building or part of a building that is constructed or altered by, on behalf of, or for the use of the Department shall be designed, constructed, or altered so as to be readily accessible to and usable by individuals with handicaps. The definitions, requirements and standards of the Architectural Barriers Act (42 U.S.C. 4151–4157), as established in 41 CFR 101–19.600–607, apply to buildings covered by this section, except for military facilities of the Coast Guard, which are covered by 32 CFR part 56.

§§ 28.152–28.159 [Reserved]

§ 28.160 Communications.

(a) The Department shall take appropriate steps to ensure effective communication with applicants, participants, personnel of other Federal entities, and members of the public.

(1) The Department shall furnish appropriate auxiliary aids where necessary to afford an individual with handicaps an equal opportunity to participate in, and enjoy the benefits of, a program or activity conducted by the Department.

(i) In determining what type of auxiliary aid is necessary, the Department shall give primary consideration to the requests of the individual with handicaps.

(ii) The Department need not provide individually prescribed devices, readers

for personal use or study, or other devices of a personal nature to applicants or participants in programs.

(2) Where the Department communicates with applicants and beneficiaries by telephone, telecommunications devices for deaf persons (TDDs) or equally effective telecommunication systems, shall be used to communicate with persons with impaired hearing.

(b) The Department shall ensure that interested persons, including persons with impaired vision or hearing, can obtain information as to the existence and location of accessible services, activities, and facilities.

(c) The Department shall provide signs at each primary entrance to each of its inaccessible facilities, directing users to a location at which they can obtain information as to the location of accessible facilities. The international symbol for accessibility shall be used at each primary entrance of an accessible facility.

(d) This section does not require the Department to take any action that it can demonstrate would result in a fundamental alteration in the nature of a program or activity or in undue financial and administrative burdens. In those circumstances where personnel of a DOT element believe that the proposed action would fundamentally alter the program or activity or would result in an undue financial and administrative burden, the DOT element has the burden of proving that compliance with § 28.160 would result in such alteration or burden. The decision that compliance would result in such alteration or burden must be made by the Secretary or his or her designee, after considering all resources available for use in the funding and operation of the program or activity, and must be accompanied by a written statement of the reasons for reaching that conclusion. If an action required to comply with this section would result in such an alteration or such burdens, the Department shall take any other action that would not result in such an alteration or such a burden but would nevertheless ensure that, to the maximum extent possible, individuals with handicaps receive the benefits and services of the program or activity.

§§ 28.161–28.169 [Reserved]

§ 28.170 Compliance procedures.

(a) Except as provided in paragraph (b) of this section, paragraphs (c)–(k) of this section apply to all allegations of discrimination on the basis of handicap in programs of activities conducted by the Department;

(b)(1) The Department shall process complaints alleging violations of section 504 with respect to employment according to the procedures established by the Equal Employment Opportunity Commission in 29 CFR part 1613 pursuant to section 501 of the Rehabilitation Act of 1973 (29 U.S.C. 791).

(2) The Department shall process complaints alleging violations of section 504 with respect to requirements of any Department safety regulation, concerning an individual's qualifications to perform a function or to receive a certificate or license, according to the procedures for a petition for an individual waiver or request for review of a standard for possible amendment or recession. The Departmental element shall inform the complainant, in writing, or the decision on the request. The complainant may request reconsideration by the Departmental element of the decision. The decision on the petition or request shall constitute the Department's final action in the matter.

(c) Responsibility for implementation and operation of this section shall be vested in the Director, Departmental Office of Civil Rights.

(d)(1) The Department shall accept and investigate all complete complaints for which it has jurisdiction. All complete complaints must be filed within 180 days of the alleged act of discrimination. The Department may extend this time period for good cause.

(2) If the subject matter of a complete complaint concerns a decision by a Departmental element, under a safety regulation, concerning an individual's qualifications to perform a function or to receive a certificate or license, and the complainant has available within the Departmental element a formal review or appeal mechanism

concerning that decision, the Department shall not take action on the complaint until the Departmental element's review or appeal process has been completed.

(e) If the Department receives a complaint over which it does not have jurisdiction, it shall promptly notify the complainant and shall make reasonable efforts to refer the complaint to the appropriate Government entity.

(f) The Department shall notify the Architectural and Transportation Barriers Compliance Board upon receipt of any complaint alleging that a building or facility that is subject to the Architectural Barriers Act of 1968, as amended (42 U.S.C. 4151–4157), is not readily accessible to and usable by individuals with handicaps.

(g) Within 180 days of the receipt of a complete complaint for which it has jurisdiction, the Department shall notify the complainant of the results of the investigation in a letter containing—

(1) Findings of fact and conclusions of law;

(2) A description of a remedy for each violation found; and

(3) A notice of the right to appeal.

(h) Appeals of the findings of fact and conclusions of law or remedies must be filed by the complainant within 90 days of receipt from the Department of the letter required by §28.170(g). The Department may extend this time for good cause.

(i) Timely appeals shall be accepted and processed by the Assistant Secretary for Transportation Policy. The appeal will not be heard by the same person who made the initial determination on the request. The decision on the appeal shall constitute the Department's final action in the matter.

(j) The Department shall notify the complainant of the results of the appeal within 60 days of the receipt of the request. If the Department determines that it needs additional information from the complainant, it shall have 60 days from the date it receives the additional information to make its determination on the appeal.

(k) The time limits cited in paragraphs (g) and (j) of this section may be extended with the permission of the Assistant Attorney General.

(l) The Department may delegate its authority for conducting complaint investigations to other Federal agencies, except that the authority for making the final determination may not be delegated to another agency.

[56 FR 37296, Aug. 6, 1991, as amended at 59 FR 10061, Mar. 3, 1994]

§§ 28.171–28.999 [Reserved]

PART 29—GOVERNMENTWIDE DEBARMENT AND SUSPENSION (NONPROCUREMENT) AND GOVERNMENTWIDE REQUIREMENTS FOR DRUG-FREE WORKPLACE (GRANTS)

Subpart A—General

Sec.
29.100 Purpose.
29.105 Definitions.
29.110 Coverage.
29.115 Policy.
29.120 Saving clause.

Subpart B—Effect of Action

29.200 Debarment or suspension.
29.205 Ineligible persons.
29.210 Voluntary exclusion.
29.215 Exception provision.
29.220 Continuation of covered transactions.
29.225 Failure to adhere to restrictions.

Subpart C—Debarment

29.300 General.
29.305 Causes for debarment.
29.310 Procedures.
29.311 Investigation and referral.
29.312 Notice of proposed debarment.
29.313 Opportunity to contest proposed debarment.
29.314 Debarring official's decision.
29.315 Settlement and voluntary exclusion.
29.320 Period of debarment.
29.325 Scope of debarment.

Subpart D—Suspension

29.400 General.
29.405 Causes for suspension.
29.410 Procedures.
29.411 Notice of suspension.
29.412 Opportunity to contest suspension.
29.413 Suspending official's decision.
29.415 Period of suspension.
29.420 Scope of suspension.

Subpart E—Responsibilities of GSA, Agency, and Participants

29.500 GSA responsibilities.

29.505 DOT responsibilities.
29.510 Participants' responsibilities.

Subpart F—Drug-Free Workplace Requirements (Grants)

29.600 Purpose.
29.605 Definitions.
29.610 Coverage.
29.615 Grounds for suspension of payments, suspension or termination of grants, or suspension or debarment.
29.620 Effect of violation.
29.625 Exception provision.
29.630 Certification requirements and procedures.
29.635 Reporting of and employee sanctions for convictions of criminal drug offenses.
APPENDIX A TO PART 29—CERTIFICATION REGARDING DEBARMENT, SUSPENSION, AND OTHER RESPONSIBILITY MATTERS—PRIMARY COVERED TRANSACTIONS
APPENDIX B TO PART 29—CERTIFICATION REGARDING DEBARMENT, SUSPENSION, INELIGIBILITY AND VOLUNTARY EXCLUSION—LOWER TIER COVERED TRANSACTIONS
APPENDIX C TO PART 29—CERTIFICATION REGARDING DRUG-FREE WORKPLACE REQUIREMENTS

AUTHORITY: 41 U.S.C. 701 *et seq.*; 49 U.S.C. 322(a); E.O. 12549, 3 CFR, 1986 Comp., p. 189.

CROSS REFERENCE: See also Office of Management and Budget notice published at 55 FR 21679, May 25, 1990, and 60 FR 33036, June 26, 1995.

SOURCE: Amdt. 29–1, 53 FR 19203, 19204, May 26, 1988, unless otherwise noted.

Subpart A—General

§ 29.100 Purpose.

(a) Executive Order (E.O.) 12549 provides that, to the extent permitted by law, Executive departments and agencies shall participate in a governmentwide system for nonprocurement debarment and suspension. A person who is debarred or suspended shall be excluded from Federal financial and nonfinancial assistance and benefits under Federal programs and activities. Debarment or suspension of a participant in a program by one agency shall have governmentwide effect.

(b) These regulations implement section 3 of E.O. 12549 and the guidelines promulgated by the Office of Management and Budget under section 6 of the E.O. by:

(1) Prescribing the programs and activities that are covered by the governmentwide system;

(2) Prescribing the governmentwide criteria and governmentwide minimum due process procedures that each agency shall use;

(3) Providing for the listing of debarred and suspended participants, participants declared ineligible (see definition of ''ineligible'' in § 29.105), and participants who have voluntarily excluded themselves from participation in covered transactions;

(4) Setting forth the consequences of a debarment, suspension, determination of ineligibility, or voluntary exclusion; and

(5) Offering such other guidance as necessary for the effective implementation and administration of the governmentwide system.

(c) These regulations also implement Executive Order 12689 (3 CFR, 1989 Comp., p. 235) and 31 U.S.C. 6101 note (Public Law 103–355, sec. 2455, 108 Stat. 3327) by—

(1) Providing for the inclusion in the *List of Parties Excluded from Federal Procurement and Nonprocurement Programs* all persons proposed for debarment, debarred or suspended under the Federal Acquisition Regulation, 48 CFR Part 9, subpart 9.4; persons against which governmentwide exclusions have been entered under this part; and persons determined to be ineligible; and

(2) Setting forth the consequences of a debarment, suspension, determination of ineligibility, or voluntary exclusion.

(d) Although these regulations cover the listing of ineligible participants and the effect of such listing, they do not prescribe policies and procedures governing declarations of ineligibility.

[60 FR 33040, 33064, June 26, 1995]

§ 29.105 Definitions.

The following definitions apply to this part:

Adequate evidence. Information sufficient to support the reasonable belief that a particular act or omission has occurred.

Affiliate. Persons are affiliates of each other if, directly or indirectly, either one controls or has the power to control the other, *or*, a third person controls or has the power to control both. Indicia of control include, but are

not limited to: interlocking management or ownership, identity of interests among family members, shared facilities and equipment, common use of employees, or a business entity organized following the suspension or debarment of a person which has the same or similar management, ownership, or principal employees as the suspended, debarred, ineligible, or voluntarily excluded person.

Agency. Any executive department, military department or defense agency or other agency of the executive branch, excluding the independent regulatory agencies.

Civil judgment. The disposition of a civil action by any court of competent jurisdiction, whether entered by verdict, decision, settlement, stipulation, or otherwise creating a civil liability for the wrongful acts complained of; or a final determination of liability under the Program Fraud Civil Remedies Act of 1988 (31 U.S.C. 3801–12).

Conviction. A judgment or conviction of a criminal offense by any court of competent jurisdiction, whether entered upon a verdict or a plea, including a plea of nolo contendere.

Debarment. An action taken by a debarring official in accordance with these regulations to exclude a person from participating in covered transactions. A person so excluded is ''debarred.''

Debarring official. An official authorized to impose debarment. The debarring official is either:

(1) The agency head, or

(2) An official designated by the agency head.

(3) *Debarring Official.* For DOT the designated official is the head of a Departmental operating administration, who may delegate any of his or her functions under this part and authorize successive delegations.

DOT. Department of Transportation.

Indictment. Indictment for a criminal offense. An information or other filing by competent authority charging a criminal offense shall be given the same effect as an indictment.

Ineligible. Excluded from participation in Federal nonprocurement programs pursuant to a determination of ineligibility under statutory, executive order, or regulatory authority, other than Executive Order 12549 and its agency implementing regulations; for example, excluded pursuant to the Davis-Bacon Act and its implementing regulations, the equal employment opportunity acts and executive orders, or the environmental protection acts and executive orders. A person is ineligible where the determination of ineligibility affects such person's eligibility to participate in more than one covered transaction.

Legal proceedings. Any criminal proceeding or any civil judicial proceeding to which the Federal Government or a State or local government or quasi-governmental authority is a party. The term includes appeals from such proceedings.

List of Parties Excluded from Federal Procurement and Nonprocurement Programs. A list compiled, maintained and distributed by the General Services Administration (GSA) containing the names and other information about persons who have been debarred, suspended, or voluntarily excluded under Executive Orders 12549 and 12689 and these regulations or 48 CFR part 9, subpart 9.4, persons who have been proposed for debarment under 48 CFR part 9, subpart 9.4, and those persons who have been determined to be ineligible.

Notice. A written communication served in person or sent by certified mail, return receipt requested, or its equivalent, to the last known address of a party, its identified counsel, its agent for service of process, or any partner, officer, director, owner, or joint venturer of the party. Notice, if undeliverable, shall be considered to have been received by the addressee five days after being properly sent to the last address known by the agency.

Operating administration includes the Office of the Secretary, the head of which, for the purposes of this rule, is the Assistant Secretary for Administration.

Participant. Any person who submits a proposal for, enters into, or reasonably may be expected to enter into a covered transaction. This term also includes any person who acts on behalf of or is authorized to commit a participant in a covered transaction as an agent or representative of another participant.

Person. Any individual, corporation, partnership, association, unit of government or legal entity, however organized, except: foreign governments or foreign governmental entities, public international organizations, foreign government owned (in whole or in part) or controlled entities, and entities consisting wholly or partially of foreign governments or foreign governmental entities.

Preponderance of the evidence. Proof by information that, compared with that opposing it, leads to the conclusion that the fact at issue is more probably true than not.

Principal. Officer, director, owner, partner, key employee, or other person within a participant with primary management or supervisory responsibilities; or a person who has a critical influence on or substantive control over a covered transaction, whether or not employed by the participant. Persons who have a critical influence on or substantive control over a covered transaction are:

(1) Principal investigators.

Proposal. A solicited or unsolicited bid, application, request, invitation to consider or similar communication by or on behalf of a person seeking to participate or to receive a benefit, directly or indirectly, in or under a covered transaction.

Respondent. A person against whom a debarment or suspension action has been initiated.

State. Any of the States of the United States, the District of Columbia, the Commonwealth of Puerto Rico, any territory or possession of the United States, or any agency of a State, exclusive of institutions of higher education, hospitals, and units of local government. A State instrumentality will be considered part of the State government if it has a written determination from a State government that such State considers that instrumentality to be an agency of the State government.

Suspending official. An official authorized to impose suspension. The suspending official is either:

(1) The agency head, or

(2) An official designated by the agency head.

(3) *Suspending Official.* For DOT the designated official is the head of a Departmental operating administration, who may delegate any of his or her functions under this part and authorize successive delegations.

Suspension. An action taken by a suspending official in accordance with these regulations that immediately excludes a person from participating in covered transactions for a temporary period, pending completion of an investigation and such legal, debarment, or Program Fraud Civil Remedies Act proceedings as may ensue. A person so excluded is ''suspended.''

Voluntary exclusion or voluntarily excluded. A status of nonparticipation or limited participation in covered transactions assumed by a person pursuant to the terms of a settlement.

[Amdt. 29–1, 53 FR 19203, 19204, May 26, 1988, as amended at 53 FR 19203, May 26, 1988; 60 FR 33040, 33064, June 26, 1995]

§ 29.110 Coverage.

(a) These regulations apply to all persons who have participated, are currently participating or may reasonably be expected to participate in transactions under Federal nonprocurement programs. For purposes of these regulations such transactions will be referred to as ''covered transactions.''

(1) *Covered transaction.* For purposes of these regulations, a covered transaction is a primary covered transaction or a lower tier covered transaction. Covered transactions at any tier need not involve the transfer of Federal funds.

(i) *Primary covered transaction.* Except as noted in paragraph (a)(2) of this section, a primary covered transaction is any nonprocurement transaction between an agency and a person, regardless of type, including: grants, cooperative agreements, scholarships, fellowships, contracts of assistance, loans, loan guarantees, subsidies, insurance, payments for specified use, donation agreements and any other nonprocurement transactions between a Federal agency and a person. Primary covered transactions also include those transactions specially designated by the U.S. Department of Housing and Urban

Development in such agency's regulations governing debarment and suspension.

(ii) *Lower tier covered transaction.* A lower tier covered transaction is:

(A) Any transaction between a participant and a person other than a procurement contract for goods or services, regardless of type, under a primary covered transaction.

(B) Any procurement contract for goods or services between a participant and a person, regardless of type, expected to equal or exceed the Federal procurement small purchase threshold fixed at 10 U.S.C. 2304(g) and 41 U.S.C. 253(g) (currently $25,000) under a primary covered transaction.

(C) Any procurement contract for goods or services between a participant and a person under a covered transaction, regardless of amount, under which that person will have a critical influence on or substantive control over that covered transaction. Such persons are:

(*1*) Principal investigators.

(*2*) Providers of federally-required audit services.

(2) *Exceptions.* The following transactions are not covered:

(i) Statutory entitlements or mandatory awards (but not subtier awards thereunder which are not themselves mandatory), including deposited funds insured by the Federal Government;

(ii) Direct awards to foreign governments or public international organizations, or transactions with foreign governments or foreign governmental entities, public international organizations, foreign government owned (in whole or in part) or controlled entities, entities consisting wholly or partially of foreign governments or foreign governmental entities;

(iii) Benefits to an individual as a personal entitlement without regard to the individual's present responsibility (but benefits received in an individual's business capacity are not excepted);

(iv) Federal employment;

(v) Transactions pursuant to national or agency-recognized emergencies or disasters;

(vi) Incidental benefits derived from ordinary governmental operations; and

(vii) Other transactions where the application of these regulations would be prohibited by law.

(b) *Relationship to other sections.* This section describes the types of transactions to which a debarment or suspension under the regulations will apply. Subpart B, ''Effect of Action,'' §29.200, ''Debarment or suspension,'' sets forth the consequences of a debarment or suspension. Those consequences would obtain only with respect to participants and principals in the covered transactions and activities described in §29.110(a). Sections 29.325, ''Scope of debarment,'' and 29.420, ''Scope of suspension,'' govern the extent to which a specific participant or organizational elements of a participant would be automatically included within a debarment or suspension action, and the conditions under which affiliates or persons associated with a participant may also be brought within the scope of the action.

(c) *Relationship to Federal procurement activities.* In accordance with E.O. 12689 and section 2455 of Public Law 103–355, any debarment, suspension, proposed debarment or other governmentwide exclusion initiated under the Federal Acquisition Regulation (FAR) on or after August 25, 1995 shall be recognized by and effective for Executive Branch agencies and participants as an exclusion under this regulation. Similarly, any debarment, suspension or other governmentwide exclusion initiated under this regulation on or after August 25, 1995 shall be recognized by and effective for those agencies as a debarment or suspension under the FAR.

[Amdt. 29–1, 53 FR 19203, 19204, May 26, 1988, as amended at 60 FR 33041, 33064, June 26, 1995]

§29.115 Policy.

(a) In order to protect the public interest, it is the policy of the Federal Government to conduct business only with responsible persons. Debarment and suspension are discretionary actions that, taken in accordance with Executive Order 12549 and these regulations, are appropriate means to implement this policy.

(b) Debarment and suspension are serious actions which shall be used only

in the public interest and for the Federal Government's protection and not for purposes of punishment. Agencies may impose debarment or suspension for the causes and in accordance with the procedures set forth in these regulations.

(c) When more than one agency has an interest in the proposed debarment or suspension of a person, consideration shall be given to designating one agency as the lead agency for making the decision. Agencies are encouraged to establish methods and procedures for coordinating their debarment or suspension actions.

§ 29.120 Saving clause.

Any debarment or suspension initiated before October 1, 1988, shall be governed by part 29 of the Department's regulations as part 29 existed immediately before October 1, 1988, including § 29.125 thereof.

[Amdt. 29–1, 53 FR 19203, May 26, 1988]

Subpart B—Effect of Action

§ 29.200 Debarment or suspension.

(a) *Primary covered transactions.* Except to the extent prohibited by law, persons who are debarred or suspended shall be excluded from primary covered transactions as either participants or principals throughout the Executive Branch of the Federal Government for the period of their debarment, suspension, or the period they are proposed for debarment under 48 CFR part 9, subpart 9.4. Accordingly, no agency shall enter into primary covered transactions with such excluded persons during such period, except as permitted pursuant to § 29.215.

(b) *Lower tier covered transactions.* Except to the extent prohibited by law, persons who have been proposed for debarment under 48 CFR part 9, subpart 9.4, debarred or suspended shall be excluded from participating as either participants or principals in all lower tier covered transactions (see § 29.110(a)(1)(ii)) for the period of their exclusion.

(c) *Exceptions.* Debarment or suspension does not affect a person's eligibility for—

(1) Statutory entitlements or mandatory awards (but not subtier awards thereunder which are not themselves mandatory), including deposited funds insured by the Federal Government;

(2) Direct awards to foreign governments or public international organizations, or transactions with foreign governments or foreign governmental entities, public international organizations, foreign government owned (in whole or in part) or controlled entities, and entities consisting wholly or partially of foreign governments or foreign governmental entities;

(3) Benefits to an individual as a personal entitlement without regard to the individual's present responsibility (but benefits received in an individual's business capacity are not excepted);

(4) Federal employment;

(5) Transactions pursuant to national or agency-recognized emergencies or disasters;

(6) Incidental benefits derived from ordinary governmental operations; and

(7) Other transactions where the application of these regulations would be prohibited by law.

[60 FR 33041, 33064, June 26, 1995]

§ 29.205 Ineligible persons.

Persons who are ineligible, as defined in § 29.105(i), are excluded in accordance with the applicable statutory, executive order, or regulatory authority.

§ 29.210 Voluntary exclusion.

Persons who accept voluntary exclusions under § 29.315 are excluded in accordance with the terms of their settlements. DOT shall, and participants may, contact the original action agency to ascertain the extent of the exclusion.

§ 29.215 Exception provision.

DOT may grant an exception permitting a debarred, suspended, or voluntarily excluded person, or a person proposed for debarment under 48 CFR part 9, subpart 9.4, to participate in a particular covered transaction upon a written determination by the agency head or an authorized designee stating the reason(s) for deviating from the

Presidential policy established by Executive Order 12549 and § 29.200. However, in accordance with the President's stated intention in the Executive Order, exceptions shall be granted only infrequently. Exceptions shall be reported in accordance with § 29.505(a).

[60 FR 33041, 33064, June 26, 1995]

§ 29.220 Continuation of covered transactions.

(a) Notwithstanding the debarment, suspension, proposed debarment under 48 CFR part 9, subpart 9.4, determination of ineligibility, or voluntary exclusion of any person by an agency, agencies and participants may continue covered transactions in existence at the time the person was debarred, suspended, proposed for debarment under 48 CFR part 9, subpart 9.4, declared ineligible, or voluntarily excluded. A decision as to the type of termination action, if any, to be taken should be made only after thorough review to ensure the propriety of the proposed action.

(b) Agencies and participants shall not renew or extend covered transactions (other than no-cost time extensions) with any person who is debarred, suspended, proposed for debarment under 48 CFR part 9, subpart 9.4, ineligible or voluntary excluded, except as provided in § 29.215.

[60 FR 33041, 33064, June 26, 1995]

§ 29.225 Failure to adhere to restrictions.

(a) Except as permitted under § 29.215 or § 29.220, a participant shall not knowingly do business under a covered transaction with a person who is—

(1) Debarred or suspended;

(2) Proposed for debarment under 48 CFR part 9, subpart 9.4; or

(3) Ineligible for or voluntarily excluded from the covered transaction.

(b) Violation of the restriction under paragraph (a) of this section may result in disallowance of costs, annulment or termination of award, issuance of a stop work order, debarment or suspension, or other remedies as appropriate.

(c) A participant may rely upon the certification of a prospective participant in a lower tier covered transaction that it and its principals are not debarred, suspended, proposed for debarment under 48 CFR part 9, subpart 9.4, ineligible, or voluntarily excluded from the covered transaction (See appendix B of these regulations), unless it knows that the certification is erroneous. An agency has the burden of proof that a participant did knowingly do business with a person that filed an erroneous certification.

[60 FR 33041, 33064, June 26, 1995]

Subpart C—Debarment

§ 29.300 General.

The debarring official may debar a person for any of the causes in § 29.305, using procedures established in §§ 29.310 through 29.314. The existence of a cause for debarment, however, does not necessarily require that the person be debarred; the seriousness of the person's acts or omissions and any mitigating factors shall be considered in making any debarment decision.

§ 29.305 Causes for debarment.

Debarment may be imposed in accordance with the provisions of §§ 29.300 through 29.314 for:

(a) Conviction of or civil judgment for:

(1) Commission of fraud or a criminal offense in connection with obtaining, attempting to obtain, or performing a public or private agreement or transaction;

(2) Violation of Federal or State antitrust statutes, including those proscribing price fixing between competitors, allocation of customers between competitors, and bid rigging;

(3) Commission of embezzlement, theft, forgery, bribery, falsification or destruction of records, making false statements, receiving stolen property, making false claims, or obstruction of justice; or

(4) Commission of any other offense indicating a lack of business integrity or business honesty that seriously and directly affects the present responsibility of a person.

(b) Violation of the terms of a public agreement or transaction so serious as to affect the integrity of an agency program, such as:

(1) A willful failure to perform in accordance with the terms of one or more public agreements or transactions;

(2) A history of failure to perform or of unsatisfactory performance of one or more public agreements or transactions; or

(3) A willful violation of a statutory or regulatory provision or requirement applicable to a public agreement or transaction.

(c) Any of the following causes:

(1) A nonprocurement debarment by any Federal agency taken before October 1, 1988, the effective date of these regulations, or a procurement debarment by any Federal agency taken pursuant to 48 CFR subpart 9.4;

(2) Knowingly doing business with a debarred, suspended, ineligible, or voluntarily excluded person, in connection with a covered transaction, except as permitted in § 29.215 or § 29.220;

(3) Failure to pay a single substantial debt, or a number of outstanding debts (including disallowed costs and overpayments, but not including sums owed the Federal Government under the Internal Revenue Code) owed to any Federal agency or instrumentality, provided the debt is uncontested by the debtor or, if contested, provided that the debtor's legal and administrative remedies have been exhausted;

(4) Violation of a material provision of a voluntary exclusion agreement entered into under § 29.315 or of any settlement of a debarment or suspension action; or

(5) Violation of any requirement of subpart F of this part, relating to providing a drug-free workplace, as set forth in § 29.615 of this part.

(d) Any other cause of so serious or compelling a nature that it affects the present responsibility of a person.

[Amdt. 29–1, 53 FR 19203, 19204, May 26, 1988, as amended at 54 FR 4950, 4963, Jan. 31, 1989]

§ 29.310 Procedures.

DOT shall process debarment actions as informally as practicable, consistent with the principles of fundamental fairness, using the procedures in §§ 29.311 through 29.314.

§ 29.311 Investigation and referral.

Information concerning the existence of a cause for debarment from any source shall be promptly reported, investigated, and referred, when appropriate, to the debarring official for consideration. After consideration, the debarring official may issue a notice of proposed debarment.

§ 29.312 Notice of proposed debarment.

A debarment proceeding shall be initiated by notice to the respondent advising:

(a) That debarment is being considered;

(b) Of the reasons for the proposed debarment in terms sufficient to put the respondent on notice of the conduct or transaction(s) upon which it is based;

(c) Of the cause(s) relied upon under § 29.305 for proposing debarment;

(d) Of the provisions of §§ 29.311 through 29.314, and any other DOT procedures, if applicable, governing debarment decisionmaking; and

(e) Of the potential effect of a debarment.

§ 29.313 Opportunity to contest proposed debarment.

(a) *Submission in opposition.* Within 30 days after receipt of the notice of proposed debarment, the respondent may submit, in person, in writing, or through a representative, information and argument in opposition to the proposed debarment.

(b) *Additional proceedings as to disputed material facts.* (1) In actions not based upon a conviction or civil judgment, if the debarring official finds that the respondent's submission in opposition raises a genuine dispute over facts material to the proposed debarment, respondent(s) shall be afforded an opportunity to appear with a representative, submit documentary evidence, present witnesses, and confront any witness the agency presents.

(2) A transcribed record of any additional proceedings shall be made available at cost to the respondent, upon request, unless the respondent and the agency, by mutual agreement, waive the requirement for a transcript.

§ 29.314 Debarring official's decision.

(a) *No additional proceedings necessary.* In actions based upon a conviction or civil judgment, or in which there is no

genuine dispute over material facts, the debarring official shall make a decision on the basis of all the information in the administrative record, including any submission made by the respondent. The decision shall be made within 45 days after receipt of any information and argument submitted by the respondent, unless the debarring official extends this period for good cause.

(b) *Additional proceedings necessary.* (1) In actions in which additional proceedings are necessary to determine disputed material facts, written findings of fact shall be prepared. The debarring official shall base the decision on the facts as found, together with any information and argument submitted by the respondent and any other information in the administrative record.

(2) The debarring official may refer disputed material facts to another official for findings of fact. The debarring official may reject any such findings, in whole or in part, only after specifically determining them to be arbitrary and capricious or clearly erroneous.

(3) The debarring official's decision shall be made after the conclusion of the proceedings with respect to disputed facts.

(c) (1) *Standard of proof.* In any debarment action, the cause for debarment must be established by a preponderance of the evidence. Where the proposed debarment is based upon a conviction or civil judgment, the standard shall be deemed to have been met.

(2) *Burden of proof.* The burden of proof is on the agency proposing debarment.

(d) *Notice of debarring official's decision.* (1) If the debarring official decides to impose debarment, the respondent shall be given prompt notice:

(i) Referring to the notice of proposed debarment;

(ii) Specifying the reasons for debarment;

(iii) Stating the period of debarment, including effective dates; and

(iv) Advising that the debarment is effective for covered transactions throughout the executive branch of the Federal Government unless an agency head or an authorized designee makes the determination referred to in § 29.215.

(2) If the debarring official decides not to impose debarment, the respondent shall be given prompt notice of that decision. A decision not to impose debarment shall be without prejudice to a subsequent imposition of debarment by any other agency.

§ 29.315 Settlement and voluntary exclusion.

(a) When in the best interest of the Government, DOT may, at any time, settle a debarment or suspension action.

(1) An operating administration may settle a debarment or suspension action under this section.

(2) [Reserved]

(b) If a participant and the agency agree to a voluntary exclusion of the participant, such voluntary exclusion shall be entered on the Nonprocurement List (see subpart E).

[Amdt. 29–1, 53 FR 19203, 19204, May 26, 1988, as amended at 53 FR 19204, May 26, 1988]

§ 29.320 Period of debarment.

(a) Debarment shall be for a period commensurate with the seriousness of the cause(s). If a suspension precedes a debarment, the suspension period shall be considered in determining the debarment period.

(1) Debarment for causes other than those related to a violation of the requirements of subpart F of this part generally should not exceed three years. Where circumstances warrant, a longer period of debarment may be imposed.

(2) In the case of a debarment for a violation of the requirements of subpart F of this part (*see* 29.305(c)(5)), the period of debarment shall not exceed five years.

(b) The debarring official may extend an existing debarment for an additional period, if that official determines that an extension is necessary to protect the public interest. However, a debarment may not be extended solely on the basis of the facts and circumstances upon which the initial debarment action was based. If debarment for an additional period is determined to be necessary, the procedures

of §§ 29.311 through 29.314 shall be followed to extend the debarment.

(c) The respondent may request the debarring official to reverse the debarment decision or to reduce the period or scope of debarment. Such a request shall be in writing and supported by documentation. The debarring official may grant such a request for reasons including, but not limited to:

(1) Newly discovered material evidence;

(2) Reversal of the conviction or civil judgment upon which the debarment was based;

(3) Bona fide change in ownership or management;

(4) Elimination of other causes for which the debarment was imposed; or

(5) Other reasons the debarring official deems appropriate.

[Amdt. 29–1, 53 FR 19203, 19204, May 26, 1988, as amended at 54 FR 4950, 4963, Jan. 31, 1989]

§ 29.325 Scope of debarment.

(a) *Scope in general.* (1) Debarment of a person under these regulations constitutes debarment of all its divisions and other organizational elements from all covered transactions, unless the debarment decision is limited by its terms to one or more specifically identified individuals, divisions or other organizational elements or to specific types of transactions.

(2) The debarment action may include any affiliate of the participant that is specifically named and given notice of the proposed debarment and an opportunity to respond (see §§ 29.311 through 29.314).

(b) *Imputing conduct.* For purposes of determining the scope of debarment, conduct may be imputed as follows:

(1) *Conduct imputed to participant.* The fraudulent, criminal or other seriously improper conduct of any officer, director, shareholder, partner, employee, or other individual associated with a participant may be imputed to the participant when the conduct occurred in connection with the individual's performance of duties for or on behalf of the participant, or with the participant's knowledge, approval, or acquiescence. The participant's acceptance of the benefits derived from the conduct shall be evidence of such knowledge, approval, or acquiescence.

(2) *Conduct imputed to individuals associated with participant.* The fraudulent, criminal, or other seriously improper conduct of a participant may be imputed to any officer, director, shareholder, partner, employee, or other individual associated with the participant who participated in, knew of, or had reason to know of the participant's conduct.

(3) *Conduct of one participant imputed to other participants in a joint venture.* The fraudulent, criminal, or other seriously improper conduct of one participant in a joint venture, grant pursuant to a joint application, or similar arrangement may be imputed to other participants if the conduct occurred for or on behalf of the joint venture, grant pursuant to a joint application, or similar arrangement may be imputed to other participants if the conduct occurred for or on behalf of the joint venture, grant pursuant to a joint application, or similar arrangement or with the knowledge, approval, or acquiescence of these participants. Acceptance of the benefits derived from the conduct shall be evidence of such knowledge, approval, or acquiescence.

Subpart D—Suspension

§ 29.400 General.

(a) The suspending official may suspend a person for any of the causes in § 29.405 using procedures established in §§ 29.410 through 29.413.

(b) Suspension is a serious action to be imposed only when:

(1) There exists adequate evidence of one or more of the causes set out in § 29.405, and

(2) Immediate action is necessary to protect the public interest.

(c) In assessing the adequacy of the evidence, the agency should consider how much information is available, how credible it is given the circumstances, whether or not important allegations are corroborated, and what inferences can reasonably be drawn as a result. This assessment should include an examination of basic documents such as grants, cooperative agreements, loan authorizations, and contracts.

§ 29.405 Causes for suspension.

(a) Suspension may be imposed in accordance with the provisions of §§ 29.400 through 29.413 upon adequate evidence:

(1) To suspect the commission of an offense listed in § 29.305(a); or

(2) That a cause for debarment under § 29.305 may exist.

(b) Indictment shall constitute adequate evidence for purposes of suspension actions.

§ 29.410 Procedures.

(a) *Investigation and referral.* Information concerning the existence of a cause for suspension from any source shall be promptly reported, investigated, and referred, when appropriate, to the suspending official for consideration. After consideration, the suspending official may issue a notice of suspension.

(b) *Decisionmaking process.* DOT shall process suspension actions as informally as practicable, consistent with principles of fundamental fairness, using the procedures in §§ 29.411 through 29.413.

§ 29.411 Notice of suspension.

When a respondent is suspended, notice shall immediately be given:

(a) That suspension has been imposed;

(b) That the suspension is based on an indictment, conviction, or other adequate evidence that the respondent has committed irregularities seriously reflecting on the propriety of further Federal Government dealings with the respondent;

(c) Describing any such irregularities in terms sufficient to put the respondent on notice without disclosing the Federal Government's evidence;

(d) Of the cause(s) relied upon under § 29.405 for imposing suspension;

(e) That the suspension is for a temporary period pending the completion of an investigation or ensuing legal, debarment, or Program Fraud Civil Remedies Act proceedings;

(f) Of the provisions of §§ 29.411 through 29.413 and any other DOT procedures, if applicable, governing suspension decisionmaking; and

(g) Of the effect of the suspension.

§ 29.412 Opportunity to contest suspension.

(a) *Submission in opposition.* Within 30 days after receipt of the notice of suspension, the respondent may submit, in person, in writing, or through a representative, information and argument in opposition to the suspension.

(b) *Additional proceedings as to disputed material facts.* (1) If the suspending official finds that the respondent's submission in opposition raises a genuine dispute over facts material to the suspension, respondent(s) shall be afforded an opportunity to appear with a representative, submit documentary evidence, present witnesses, and confront any witness the agency presents, unless:

(i) The action is based on an indictment, conviction or civil judgment, or

(ii) A determination is made, on the basis of Department of Justice advice, that the substantial interests of the Federal Government in pending or contemplated legal proceedings based on the same facts as the suspension would be prejudiced.

(2) A transcribed record of any additional proceedings shall be prepared and made available at cost to the respondent, upon request, unless the respondent and the agency, by mutual agreement, waive the requirement for a transcript.

§ 29.413 Suspending official's decision.

The suspending official may modify or terminate the suspension (for example, see § 29.320(c) for reasons for reducing the period or scope of debarment) or may leave it in force. However, a decision to modify or terminate the suspension shall be without prejudice to the subsequent imposition of suspension by any other agency or debarment by any agency. The decision shall be rendered in accordance with the following provisions:

(a) *No additional proceedings necessary.* In actions: based on an indictment, conviction, or civil judgment; in which there is no genuine dispute over material facts; or in which additional proceedings to determine disputed material facts have been denied on the basis of Department of Justice advice, the suspending official shall make a decision on the basis of all the information

in the administrative record, including any submission made by the respondent. The decision shall be made within 45 days after receipt of any information and argument submitted by the respondent, unless the suspending official extends this period for good cause.

(b) *Additional proceedings necessary.* (1) In actions in which additional proceedings are necessary to determine disputed material facts, written findings of fact shall be prepared. The suspending official shall base the decision on the facts as found, together with any information and argument submitted by the respondent and any other information in the administrative record.

(2) The suspending official may refer matters involving disputed material facts to another official for findings of fact. The suspending official may reject any such findings, in whole or in part, only after specifically determining them to be arbitrary or capricious or clearly erroneous.

(c) *Notice of suspending official's decision.* Prompt written notice of the suspending official's decision shall be sent to the respondent.

§ 29.415 Period of suspension.

(a) Suspension shall be for a temporary period pending the completion of an investigation or ensuing legal, debarment, or Program Fraud Civil Remedies Act proceedings, unless terminated sooner by the suspending official or as provided in paragraph (b) of this section.

(b) If legal or administrative proceedings are not initiated within 12 months after the date of the suspension notice, the suspension shall be terminated unless an Assistant Attorney General or United States Attorney requests its extension in writing, in which case it may be extended for an additional six months. In no event may a suspension extend beyond 18 months, unless such proceedings have been initiated within that period.

(c) The suspending official shall notify the Department of Justice of an impending termination of a suspension, at least 30 days before the 12-month period expires, to give that Department an opportunity to request an extension.

§ 29.420 Scope of suspension.

The scope of a suspension is the same as the scope of a debarment (see § 29.325), except that the procedures of §§ 29.410 through 29.413 shall be used in imposing a suspension.

Subpart E—Responsibilities of GSA, Agency and Participants

§ 29.500 GSA responsibilities.

(a) In accordance with the OMB guidelines, GSA shall compile, maintain, and distribute a list of all persons who have been debarred, suspended, or voluntarily excluded by agencies under Executive Order 12549 and these regulations, and those who have been determined to be ineligible.

(b) At a minimum, this list shall indicate:

(1) The names and addresses of all debarred, suspended, ineligible, and voluntarily excluded persons, in alphabetical order, with cross-references when more than one name is involved in a single action;

(2) The type of action;

(3) The cause for the action;

(4) The scope of the action;

(5) Any termination date for each listing; and

(6) The agency and name and telephone number of the agency point of contact for the action.

§ 29.505 DOT responsibilities.

(a) The agency shall provide GSA with current information concerning debarments, suspension, determinations of ineligibility, and voluntary exclusions it has taken. Until February 18, 1989, the agency shall also provide GSA and OMB with information concerning all transactions in which DOT has granted exceptions under § 29.215 permitting participation by debarred, suspended, or voluntarily excluded persons.

(b) Unless an alternative schedule is agreed to by GSA, the agency shall advise GSA of the information set forth in § 29.500(b) and of the exceptions granted under § 29.215 within five working days after taking such actions.

(c) The agency shall direct inquiries concerning listed persons to the agency that took the action.

(d) Agency officials shall check the Nonprocurement List before entering covered transactions to determine whether a participant in a primary transaction is debarred, suspended, ineligible, or voluntarily excluded (Tel. #).

(e) Agency officials shall check the Nonprocurement List before approving principals or lower tier participants where agency approval of the principal or lower tier participant is required under the terms of the transaction, to determine whether such principals or participants are debarred, suspended, ineligible, or voluntarily excluded.

§ 29.510 Participants' responsibilities.

(a) *Certification by participants in primary covered transactions.* Each participant shall submit the certification in appendix A to this part for it and its principals at the time the participant submits its proposal in connection with a primary covered transaction, except that States need only complete such certification as to their principals. Participants may decide the method and frequency by which they determine the eligibility of their principals. In addition, each participant may, but is not required to, check the Nonprocurement List for its principals (Tel. #). Adverse information on the certification will not necessarily result in denial of participation. However, the certification, and any additional information pertaining to the certification submitted by the participant, shall be considered in the administration of covered transactions.

(b) *Certification by participants in lower tier covered transactions.* (1) Each participant shall require participants in lower tier covered transactions to include the certification in appendix B to this part for it and its principals in any proposal submitted in connection with such lower tier covered transactions.

(i) However, an operating administration may require that a person who enters into a primary covered transaction require the next lower tier participant to include, with conforming modifications, the certification in appendix A.

(ii) [Reserved]

(2) A participant may rely upon the certification of a prospective participant in a lower tier covered transaction that it and its principals are not debarred, suspended, ineligible, or voluntarily excluded from the covered transaction by any Federal agency, unless it knows that the certification is erroneous. Participants may decide the method and frequency by which they determine the eligiblity of their principals. In addition, a participant may, but is not required to, check the Nonprocurement List for its principals and for participants (Tel. #).

(c) *Changed circumstances regarding certification.* A participant shall provide immediate written notice to DOT if at any time the participant learns that its certification was erroneous when submitted or has become erroneous by reason of changed circumstances. Participants in lower tier covered transactions shall provide the same updated notice to the participant to which it submitted its proposals.

[Amdt. 29–1, 53 FR 19203, 19204, May 26, 1988, as amended at 53 FR 19204, May 26, 1988]

Subpart F—Drug-Free Workplace Requirements (Grants)

SOURCE: 55 FR 21688, 21705, May 25, 1990, unless otherwise noted.

§ 29.600 Purpose.

(a) The purpose of this subpart is to carry out the Drug-Free Workplace Act of 1988 by requiring that—

(1) A grantee, other than an individual, shall certify to the agency that it will provide a drug-free workplace;

(2) A grantee who is an individual shall certify to the agency that, as a condition of the grant, he or she will not engage in the unlawful manufacture, distribution, dispensing, possession or use of a controlled substance in conducting any activity with the grant.

(b) Requirements implementing the Drug-Free Workplace Act of 1988 for contractors with the agency are found at 48 CFR subparts 9.4, 23.5, and 52.2.

§ 29.605 Definitions.

(a) Except as amended in this section, the definitions of § 29.105 apply to this subpart.

(b) For purposes of this subpart—

(1) *Controlled substance* means a controlled substance in schedules I through V of the Controlled Substances Act (21 U.S.C. 812), and as further defined by regulation at 21 CFR 1308.11 through 1308.15;

(2) *Conviction* means a finding of guilt (including a plea of nolo contendere) or imposition of sentence, or both, by any judicial body charged with the responsibility to determine violations of the Federal or State criminal drug statutes;

(3) *Criminal drug statute* means a Federal or non-Federal criminal statute involving the manufacture, distribution, dispensing, use, or possession of any controlled substance;

(4) *Drug-free workplace* means a site for the performance of work done in connection with a specific grant at which employees of the grantee are prohibited from engaging in the unlawful manufacture, distribution, dispensing, possession, or use of a controlled substance;

(5) *Employee* means the employee of a grantee directly engaged in the performance of work under the grant, including:

(i) All *direct charge* employees;

(ii) All *indirect charge* employees, unless their impact or involvement is insignificant to the performance of the grant; and,

(iii) Temporary personnel and consultants who are directly engaged in the performance of work under the grant and who are on the grantee's payroll.

This definition does not include workers not on the payroll of the grantee (e.g., volunteers, even if used to meet a matching requirement; consultants or independent contractors not on the payroll; or employees of subrecipients or subcontractors in covered workplaces);

(6) *Federal agency* or *agency* means any United States executive department, military department, government corporation, government controlled corporation, any other establishment in the executive branch (including the Executive Office of the President), or any independent regulatory agency;

(7) *Grant* means an award of financial assistance, including a cooperative agreement, in the form of money, or property in lieu of money, by a Federal agency directly to a grantee. The term grant includes block grant and entitlement grant programs, whether or not exempted from coverage under the grants management government-wide common rule on uniform administrative requirements for grants and cooperative agreements. The term does not include technical assistance that provides services instead of money, or other assistance in the form of loans, loan guarantees, interest subsidies, insurance, or direct appropriations; or any veterans' benefits to individuals, i.e., any benefit to veterans, their families, or survivors by virtue of the service of a veteran in the Armed Forces of the United States;

(8) *Grantee* means a person who applies for or receives a grant directly from a Federal agency (except another Federal agency);

(9) *Individual* means a natural person;

(10) *State* means any of the States of the United States, the District of Columbia, the Commonwealth of Puerto Rico, any territory or possession of the United States, or any agency of a State, exclusive of institutions of higher education, hospitals, and units of local government. A State instrumentality will be considered part of the State government if it has a written determination from a State government that such State considers the instrumentality to be an agency of the State government.

§ 29.610 Coverage.

(a) This subpart applies to any grantee of the agency.

(b) This subpart applies to any grant, except where application of this subpart would be inconsistent with the international obligations of the United States or the laws or regulations of a foreign government. A determination of such inconsistency may be made only by the agency head or his/her designee.

(c) The provisions of subparts A, B, C, D and E of this part apply to matters covered by this subpart, except where specifically modified by this subpart. In the event of any conflict between provisions of this subpart and other provisions of this part, the provisions

of this subpart are deemed to control with respect to the implementation of drug-free workplace requirements concerning grants.

§ 29.615 Grounds for suspension of payments, suspension or termination of grants, or suspension or debarment.

A grantee shall be deemed in violation of the requirements of this subpart if the agency head or his or her official designee determines, in writing, that—

(a) The grantee has made a false certification under § 29.630;

(b) With respect to a grantee other than an individual—

(1) The grantee has violated the certification by failing to carry out the requirements of paragraphs (A)(a)–(g) and/or (B) of the certification (Alternate I to appendix C) or

(2) Such a number of employees of the grantee have been convicted of violations of criminal drug statutes for violations occurring in the workplace as to indicate that the grantee has failed to make a good faith effort to provide a drug-free workplace.

(c) With respect to a grantee who is an individual—

(1) The grantee has violated the certification by failing to carry out its requirements (Alternate II to appendix C); or

(2) The grantee is convicted of a criminal drug offense resulting from a violation occurring during the conduct of any grant activity.

§ 29.620 Effect of violation.

(a) In the event of a violation of this subpart as provided in § 29.615, and in accordance with applicable law, the grantee shall be subject to one or more of the following actions:

(1) Suspension of payments under the grant;

(2) Suspension or termination of the grant; and

(3) Suspension or debarment of the grantee under the provisions of this part.

(b) Upon issuance of any final decision under this part requiring debarment of a grantee, the debarred grantee shall be ineligible for award of any grant from any Federal agency for a period specified in the decision, not to exceed five years (*see* § 29.320(a)(2) of this part).

§ 29.625 Exception provision.

The agency head may waive with respect to a particular grant, in writing, a suspension of payments under a grant, suspension or termination of a grant, or suspension or debarment of a grantee if the agency head determines that such a waiver would be in the public interest. This exception authority cannot be delegated to any other official.

§ 29.630 Certification requirements and procedures.

(a)(1) As a prior condition of being awarded a grant, each grantee shall make the appropriate certification to the Federal agency providing the grant, as provided in appendix C to this part.

(2) Grantees are not required to make a certification in order to continue receiving funds under a grant awarded before March 18, 1989, or under a no-cost time extension of such a grant. However, the grantee shall make a one-time drug-free workplace certification for a non-automatic continuation of such a grant made on or after March 18, 1989.

(b) Except as provided in this section, all grantees shall make the required certification for each grant. For mandatory formula grants and entitlements that have no application process, grantees shall submit a one-time certification in order to continue receiving awards.

(c) A grantee that is a State may elect to make one certification in each Federal fiscal year. States that previously submitted an annual certification are not required to make a certification for Fiscal Year 1990 until June 30, 1990. Except as provided in paragraph (d) of this section, this certification shall cover all grants to all State agencies from any Federal agency. The State shall retain the original of this statewide certification in its Governor's office and, prior to grant award, shall ensure that a copy is submitted individually with respect to each grant, unless the Federal agency

has designated a central location for submission.

(d)(1) The Governor of a State may exclude certain State agencies from the statewide certification and authorize these agencies to submit their own certifications to Federal agencies. The statewide certification shall name any State agencies so excluded.

(2) A State agency to which the statewide certification does not apply, or a State agency in a State that does not have a statewide certification, may elect to make one certification in each Federal fiscal year. State agencies that previously submitted a State agency certification are not required to make a certification for Fiscal Year 1990 until June 30, 1990. The State agency shall retain the original of this State agency-wide certification in its central office and, prior to grant award, shall ensure that a copy is submitted individually with respect to each grant, unless the Federal agency designates a central location for submission.

(3) When the work of a grant is done by more than one State agency, the certification of the State agency directly receiving the grant shall be deemed to certify compliance for all workplaces, including those located in other State agencies.

(e)(1) For a grant of less than 30 days performance duration, grantees shall have this policy statement and program in place as soon as possible, but in any case by a date prior to the date on which performance is expected to be completed.

(2) For a grant of 30 days or more performance duration, grantees shall have this policy statement and program in place within 30 days after award.

(3) Where extraordinary circumstances warrant for a specific grant, the grant officer may determine a different date on which the policy statement and program shall be in place.

§ 29.635 Reporting of and employee sanctions for convictions of criminal drug offenses.

(a) When a grantee other than an individual is notified that an employee has been convicted for a violation of a criminal drug statute occurring in the workplace, it shall take the following actions:

(1) Within 10 calendar days of receiving notice of the conviction, the grantee shall provide written notice, including the convicted employee's position title, to every grant officer, or other designee on whose grant activity the convicted employee was working, unless a Federal agency has designated a central point for the receipt of such notifications. Notification shall include the identification number(s) for each of the Federal agency's affected grants.

(2) Within 30 calendar days of receiving notice of the conviction, the grantee shall do the following with respect to the employee who was convicted.

(i) Take appropriate personnel action against the employee, up to and including termination, consistent with requirements of the Rehabilitation Act of 1973, as amended; or

(ii) Require the employee to participate satisfactorily in a drug abuse assistance or rehabilitation program approved for such purposes by a Federal, State, or local health, law enforcement, or other appropriate agency.

(b) A grantee who is an individual who is convicted for a violation of a criminal drug statute occurring during the conduct of any grant activity shall report the conviction, in writing, within 10 calendar days, to his or her Federal agency grant officer, or other designee, unless the Federal agency has designated a central point for the receipt of such notices. Notification shall include the identification number(s) for each of the Federal agency's affected grants.

(Approved by the Office of Management and Budget under control number 0991–0002)

APPENDIX A TO PART 29—CERTIFICATION REGARDING DEBARMENT, SUSPENSION, AND OTHER RESPONSIBILITY MATTERS—PRIMARY COVERED TRANSACTIONS

Instructions for Certification

1. By signing and submitting this proposal, the prospective primary participant is providing the certification set out below.

2. The inability of a person to provide the certification required below will not necessarily result in denial of participation in this covered transaction. The prospective participant shall submit an explanation of

why it cannot provide the certification set out below. The certification or explanation will be considered in connection with the department or agency's determination whether to enter into this transaction. However, failure of the prospective primary participant to furnish a certification or an explanation shall disqualify such person from participation in this transaction.

3. The certification in this clause is a material representation of fact upon which reliance was placed when the department or agency determined to enter into this transaction. If it is later determined that the prospective primary participant knowingly rendered an erroneous certification, in addition to other remedies available to the Federal Government, the department or agency may terminate this transaction for cause or default.

4. The prospective primary participant shall provide immediate written notice to the department or agency to which this proposal is submitted if at any time the prospective primary participant learns that its certification was erroneous when submitted or has become erroneous by reason of changed circumstances.

5. The terms *covered transaction, debarred, suspended, ineligible, lower tier covered transaction, participant, person, primary covered transaction, principal, proposal, and voluntarily excluded,* as used in this clause, have the meanings set out in the Definitions and Coverage sections of the rules implementing Executive Order 12549. You may contact the department or agency to which this proposal is being submitted for assistance in obtaining a copy of those regulations.

6. The prospective primary participant agrees by submitting this proposal that, should the proposed covered transaction be entered into, it shall not knowingly enter into any lower tier covered transaction with a person who is proposed for debarment under 48 CFR part 9, subpart 9.4, debarred, suspended, declared ineligible, or voluntarily excluded from participation in this covered transaction, unless authorized by the department or agency entering into this transaction.

7. The prospective primary participant further agrees by submitting this proposal that it will include the clause titled ''Certification Regarding Debarment, Suspension, Ineligibility and Voluntary Exclusion-Lower Tier Covered Transaction,'' provided by the department or agency entering into this covered transaction, without modification, in all lower tier covered transactions and in all solicitations for lower tier covered transactions.

8. A participant in a covered transaction may rely upon a certification of a prospective participant in a lower tier covered transaction that it is not proposed for debarment under 48 CFR part 9, subpart 9.4, debarred, suspended, ineligible, or voluntarily excluded from the covered transaction, unless it knows that the certification is erroneous. A participant may decide the method and frequency by which it determines the eligibility of its principals. Each participant may, but is not required to, check the List of Parties Excluded from Federal Procurement and Nonprocurement Programs.

9. Nothing contained in the foregoing shall be construed to require establishment of a system of records in order to render in good faith the certification required by this clause. The knowledge and information of a participant is not required to exceed that which is normally possessed by a prudent person in the ordinary course of business dealings.

10. Except for transactions authorized under paragraph 6 of these instructions, if a participant in a covered transaction knowingly enters into a lower tier covered transaction with a person who is proposed for debarment under 48 CFR part 9, subpart 9.4, suspended, debarred, ineligible, or voluntarily excluded from participation in this transaction, in addition to other remedies available to the Federal Government, the department or agency may terminate this transaction for cause or default.

Certification Regarding Debarment, Suspension, and Other Responsibility Matters—Primary Covered Transactions

(1) The prospective primary participant certifies to the best of its knowledge and belief, that it and its principals:

(a) Are not presently debarred, suspended, proposed for debarment, declared ineligible, or voluntarily excluded by any Federal department or agency;

(b) Have not within a three-year period preceding this proposal been convicted of or had a civil judgment rendered against them for commission of fraud or a criminal offense in connection with obtaining, attempting to obtain, or performing a public (Federal, State or local) transaction or contract under a public transaction; violation of Federal or State antitrust statutes or commission of embezzlement, theft, forgery, bribery, falsification or destruction of records, making false statements, or receiving stolen property;

(c) Are not presently indicted for or otherwise criminally or civilly charged by a governmental entity (Federal, State or local) with commission of any of the offenses enumerated in paragraph (1)(b) of this certification; and

(d) Have not within a three-year period preceding this application/proposal had one or more public transactions (Federal, State or local) terminated for cause or default.

(2) Where the prospective primary participant is unable to certify to any of the statements in this certification, such prospective participant shall attach an explanation to this proposal.

[60 FR 33042, 33064, June 26, 1995]

APPENDIX B TO PART 29—CERTIFICATION REGARDING DEBARMENT, SUSPENSION, INELIGIBILITY AND VOLUNTARY EXCLUSION—LOWER TIER COVERED TRANSACTIONS

Instructions for Certification

1. By signing and submitting this proposal, the prospective lower tier participant is providing the certification set out below.

2. The certification in this clause is a material representation of fact upon which reliance was placed when this transaction was entered into. If it is later determined that the prospective lower tier participant knowingly rendered an erroneous certification, in addition to other remedies available to the Federal Government the department or agency with which this transaction originated may pursue available remedies, including suspension and/or debarment.

3. The prospective lower tier participant shall provide immediate written notice to the person to which this proposal is submitted if at any time the prospective lower tier participant learns that its certification was erroneous when submitted or had become erroneous by reason of changed circumstances.

4. The terms *covered transaction, debarred, suspended, ineligible, lower tier covered transaction, participant, person, primary covered transaction, principal, proposal,* and *voluntarily excluded,* as used in this clause, have the meaning set out in the Definitions and Coverage sections of rules implementing Executive Order 12549. You may contact the person to which this proposal is submitted for assistance in obtaining a copy of those regulations.

5. The prospective lower tier participant agrees by submitting this proposal that, should the proposed covered transaction be entered into, it shall not knowingly enter into any lower tier covered transaction with a person who is proposed for debarment under 48 CFR part 9, subpart 9.4, debarred, suspended, declared ineligible, or voluntarily excluded from participation in this covered transaction, unless authorized by the department or agency with which this transaction originated.

6. The prospective lower tier participant further agrees by submitting this proposal that it will include this clause titled ''Certification Regarding Debarment, Suspension, Ineligibility and Voluntary Exclusion-Lower Tier Covered Transaction,'' without modification, in all lower tier covered transactions and in all solicitations for lower tier covered transactions.

7. A participant in a covered transaction may rely upon a certification of a prospective participant in a lower tier covered transaction that it is not proposed for debarment under 48 CFR part 9, subpart 9.4, debarred, suspended, ineligible, or voluntarily excluded from covered transactions, unless it knows that the certification is erroneous. A participant may decide the method and frequency by which it determines the eligibility of its principals. Each participant may, but is not required to, check the List of Parties Excluded from Federal Procurement and Nonprocurement Programs.

8. Nothing contained in the foregoing shall be construed to require establishment of a system of records in order to render in good faith the certification required by this clause. The knowledge and information of a participant is not required to exceed that which is normally possessed by a prudent person in the ordinary course of business dealings.

9. Except for transactions authorized under paragraph 5 of these instructions, if a participant in a covered transaction knowingly enters into a lower tier covered transaction with a person who is proposed for debarment under 48 CFR part 9, subpart 9.4, suspended, debarred, ineligible, or voluntarily excluded from participation in this transaction, in addition to other remedies available to the Federal Government, the department or agency with which this transaction originated may pursue available remedies, including suspension and/or debarment.

Certification Regarding Debarment, Suspension, Ineligibility an Voluntary Exclusion—Lower Tier Covered Transactions

(1) The prospective lower tier participant certifies, by submission of this proposal, that neither it nor its principals is presently debarred, suspended, proposed for debarment, declared ineligible, or voluntarily excluded from participation in this transaction by any Federal department or agency.

(2) Where the prospective lower tier participant is unable to certify to any of the statements in this certification, such prospective participant shall attach an explanation to this proposal.

[60 FR 33042, 33064, June 26, 1995]

APPENDIX C TO PART 29—CERTIFICATION REGARDING DRUG-FREE WORKPLACE REQUIREMENTS

Instructions for Certification

1. By signing and/or submitting this application or grant agreement, the grantee is providing the certification set out below.

2. The certification set out below is a material representation of fact upon which reliance is placed when the agency awards the grant. If it is later determined that the grantee knowingly rendered a false certification, or otherwise violates the requirements of the Drug-Free Workplace Act, the agency, in addition to any other remedies available to the Federal Government, may take action authorized under the Drug-Free Workplace Act.

3. For grantees other than individuals, Alternate I applies.

4. For grantees who are individuals, Alternate II applies.

5. Workplaces under grants, for grantees other than individuals, need not be identified on the certification. If known, they may be identified in the grant application. If the grantee does not identify the workplaces at the time of application, or upon award, if there is no application, the grantee must keep the identity of the workplace(s) on file in its office and make the information available for Federal inspection. Failure to identify all known workplaces constitutes a violation of the grantee's drug-free workplace requirements.

6. Workplace identifications must include the actual address of buildings (or parts of buildings) or other sites where work under the grant takes place. Categorical descriptions may be used (e.g., all vehicles of a mass transit authority or State highway department while in operation, State employees in each local unemployment office, performers in concert halls or radio studios).

7. If the workplace identified to the agency changes during the performance of the grant, the grantee shall inform the agency of the change(s), if it previously identified the workplaces in question (see paragraph five).

8. Definitions of terms in the Nonprocurement Suspension and Debarment common rule and Drug-Free Workplace common rule apply to this certification. Grantees' attention is called, in particular, to the following definitions from these rules:

Controlled substance means a controlled substance in Schedules I through V of the Controlled Substances Act (21 U.S.C. 812) and as further defined by regulation (21 CFR 1308.11 through 1308.15);

Conviction means a finding of guilt (including a plea of nolo contendere) or imposition of sentence, or both, by any judicial body charged with the responsibility to determine violations of the Federal or State criminal drug statutes;

Criminal drug statute means a Federal or non-Federal criminal statute involving the manufacture, distribution, dispensing, use, or possession of any controlled substance;

Employee means the employee of a grantee directly engaged in the performance of work under a grant, including: (i) All *direct charge* employees; (ii) All *indirect charge* employees unless their impact or involvement is insignificant to the performance of the grant; and, (iii) Temporary personnel and consultants who are directly engaged in the performance of work under the grant and who are on the grantee's payroll. This definition does not include workers not on the payroll of the grantee (e.g., volunteers, even if used to meet a matching requirement; consultants or independent contractors not on the grantee's payroll; or employees of subrecipients or subcontractors in covered workplaces).

Certification Regarding Drug-Free Workplace Requirements

Alternate I. (Grantees Other Than Individuals)

A. The grantee certifies that it will or will continue to provide a drug-free workplace by:

(a) Publishing a statement notifying employees that the unlawful manufacture, distribution, dispensing, possession, or use of a controlled substance is prohibited in the grantee's workplace and specifying the actions that will be taken against employees for violation of such prohibition;

(b) Establishing an ongoing drug-free awareness program to inform employees about—

(1) The dangers of drug abuse in the workplace;

(2) The grantee's policy of maintaining a drug-free workplace;

(3) Any available drug counseling, rehabilitation, and employee assistance programs; and

(4) The penalties that may be imposed upon employees for drug abuse violations occurring in the workplace;

(c) Making it a requirement that each employee to be engaged in the performance of the grant be given a copy of the statement required by paragraph (a);

(d) Notifying the employee in the statement required by paragraph (a) that, as a condition of employment under the grant, the employee will—

(1) Abide by the terms of the statement; and

(2) Notify the employer in writing of his or her conviction for a violation of a criminal drug statute occurring in the workplace no later than five calendar days after such conviction;

(e) Notifying the agency in writing, within ten calendar days after receiving notice under paragraph (d)(2) from an employee or otherwise receiving actual notice of such conviction. Employers of convicted employees must provide notice, including position title, to every grant officer or other designee on whose grant activity the convicted employee was working, unless the Federal agency has designated a central point for the receipt of such notices. Notice shall include

the identification number(s) of each affected grant;

(f) Taking one of the following actions, within 30 calendar days of receiving notice under paragraph (d)(2), with respect to any employee who is so convicted—

(1) Taking appropriate personnel action against such an employee, up to and including termination, consistent with the requirements of the Rehabilitation Act of 1973, as amended; or

(2) Requiring such employee to participate satisfactorily in a drug abuse assistance or rehabilitation program approved for such purposes by a Federal, State, or local health, law enforcement, or other appropriate agency;

(g) Making a good faith effort to continue to maintain a drug-free workplace through implementation of paragraphs (a), (b), (c), (d), (e) and (f).

B. The grantee may insert in the space provided below the site(s) for the performance of work done in connection with the specific grant:

Place of Performance (Street address, city, county, state, zip code)

Check ☐ if there are workplaces on file that are not identified here.

Alternate II. (Grantees Who Are Individuals)

(a) The grantee certifies that, as a condition of the grant, he or she will not engage in the unlawful manufacture, distribution, dispensing, possession, or use of a controlled substance in conducting any activity with the grant;

(b) If convicted of a criminal drug offense resulting from a violation occurring during the conduct of any grant activity, he or she will report the conviction, in writing, within 10 calendar days of the conviction, to every grant officer or other designee, unless the Federal agency designates a central point for the receipt of such notices. When notice is made to such a central point, it shall include the identification number(s) of each affected grant.

[55 FR 21690, 21705, May 25, 1990]

PART 30—DENIAL OF PUBLIC WORKS CONTRACTS TO SUPPLIERS OF GOODS AND SERVICES OF COUNTRIES THAT DENY PROCUREMENT MARKET ACCESS TO U.S. CONTRACTORS

Sec.

30.1 Purpose.
30.3 Applicability.
30.5 Effective dates.
30.7 Definitions.
30.9 Citizenship: Direct or indirect control.
30.11 Use of solicitation provisions and contract clauses.
30.13 Restrictions on Federal public works projects: Certification.
30.15 Restrictions on Federal public works projects.
30.17 Waivers.
30.19 Buy American Act.

AUTHORITY: 49 U.S.C. 322(a); Containing Resolution on the Fiscal Year 1988 Budget 109(a), Pub. L. 100–202; Airport and Airways Safety and Capacity Expansion Act of 1987, 115, Pub. L. 100–223.

SOURCE: 53 FR 19916, June 1, 1988, unless otherwise noted.

§ 30.1 Purpose.

The rules in this part implement section 109(a) of the Continuing Resolution on the Fiscal Year 1988 Budget, Public Law No. 100–202 (signed December 22, 1987) [the Continuing Resolution], and section 115 of the Airport and Airways Safety and Capacity Expansion Act of 1987, Public Law No. 100–223 (signed December 30, 1987) [the Airport Safety Act]. These rules are intended to give uniform implementation to these statutes throughout DOT procurement and grant programs.

§ 30.3 Applicability.

(a) The restrictions imposed by section 109(a) of the Continuing Resolution extend to all DOT agencies as well as all recipients of DOT funds. The restrictions apply to all projects for which funds are obligated or contracts or subcontracts are awarded during fiscal year 1988, including projects and contracts under all DOT financial assistance programs. The prohibition applies to public buildings and public works projects everywhere in the United States or any territory or possession of the United States. U.S. overseas bases, installations, and embassies are not subject to this part.

(b) The restrictions imposed by section 115 of the Airport Safety Act extend to all projects for which funds are made available by that Act, whether or not the contracts are awarded during fiscal year 1988. The restrictions apply to all contracts entered into under grants authorized by the Airport Safety Act.

(c) This part applies to projects covered by section 109(a) of the Continuing Resolution, section 115 of the Airport Safety Act, or both. Whether one or the other statute or both apply, the effect on the project shall be the same, subject to paragraph (e) of this section.

(d) In addition to construction, alteration, and repair contracts, the restrictions of this part cover all architect, engineering, and other services related to the preparation and performance of construction, alteration, and repair of public projects and public works.

(e) The restrictions of this part also apply to all products used in the construction, alteration, or repair of public projects and public works; *Provided, however,* That

(1) The restrictions of this part do not apply to construction equipment or vehicles that do not become part of a delivered structure, product, or project and

(2) Notwithstanding paragraph (c) of this section, the restrictions of section 109(a) of the Continuing Resolution do not apply to vehicles to be used by the project, including, but not limited to, buses, trucks, automobiles, rail rolling stock, and aircraft.

§30.5 Effective dates.

The provisions of section 109(a) of the Continuing Resolution apply to contracts (or new subcontracts under existing contracts, whether or not subject to the restriction) entered into after December 22, 1987, its date of enactment, and before October 1, 1988. The provisions of section 115 of the Airport Safety Act apply to contracts funded by the Act and entered into after December 30, 1987, its date of enactment; the restrictions remain effective so long as money provided by the Airport Safety Act is used. Accordingly, any contracts or subcontracts subject to the restrictions of this part entered into with contractors or subcontractors owned or controlled by citizens of subject countries, as defined by §§30.7 and 30.9 of this part, since December 22, 1987 shall be canceled at no cost to the Government, subject to the waiver provisions of §30.17 of this part. All public works or public buildings contracts entered into after December 22, 1987, shall include, or be modified to include, a provision prohibiting subcontracting with citizens of subject countries, as defined by §§30.7 and 30.9 of this part.

§30.7 Definitions.

(a) *Funds appropriated for FY 1988 by this resolution or any other law*, as used in this part with reference to section 109(a) of the Continuing Resolution, means all appropriated and trust funds available to DOT, its modal administration, or their grantees for expenditure or obligation in fiscal year 1988, regardless of the fiscal year in which the funds were appropriated.

(b) *Funds made available by this Act*, as used in this part with reference to section 115(a) of the Airport Safety Act, means all funds, including trust funds, made available to DOT, its modal administrations, or their grantees by that Act, whether or not the contracts to be funded are awarded during fiscal year 1988.

(c) *Contractor and subcontractor* means any person, other than a supplier of products, performing any architectural, engineering, or other service directly related to the preparation for or performance of the construction, alteration, or repair of any public building or public work in the United States or any territory or possession of the United States.

(d) *Contractor or subcontractor of a foreign country* means any contractor or subcontractor that is a citizen or national of a foreign country, or is controlled directly or indirectly by one or more citizens or nationals of a foreign country.

(e) *Service of a foreign country* means any service provided by a person that is a citizen or national of a foreign country, or is controlled by one or more citizens or nationals of a foreign country.

(f) *Product of a foreign country* means construction materials, i.e., articles, materials, and supplies brought to the construction site for incorporation into the public works project. A product is considered to have been produced in a foreign country if more than fifty percent of the total cost of the product is allocable to production or manufacture in the foreign country.

(g) *Foreign country* means a country included in the list of countries that discriminate against U.S. firms published by the U.S.T.R.

§ 30.9 Citizenship: Direct or indirect control.

A contractor, subcontractor, or person providing a service shall be considered to be a citizen or national of a foreign country, or controlled directly or indirectly by citizens or nationals of a foreign country, within the meaning of this part.

(a) If 50 percent or more of the contractor or subcontractor is owned by one or more citizens or nationals of the foreign country;

(b) If the title to 50 percent or more of the stock of the contractor or subcontractor is held subject to trust or fiduciary obligation in favor of one or more citizens or nationals of the foreign country;

(c) If 50 percent or more of the voting power in the contractor or subcontractor is vested in or exercisable on behalf of one or more citizens or nationals of the foreign country;

(d) In the case of a partnership, if any general partner is a citizen or national of the foreign country;

(e) In the case of a corporation, if the number of its directors necessary to constitute a quorum are citizens of the foreign country or the corporation is organized under the laws of the foreign country or any subdivision, territory, or possession thereof; or

(f) In the case of a contractor or subcontractor that is a joint venture, if any participant meets any of the criteria in paragraphs (a) through (e) of this section.

§ 30.11 Use of solicitation provisions and contract clauses.

(a) Unless the President or the Secretary waives the restrictions imposed by section 109(a) of the Continuing Resolution in accordance with § 30.17 of this part, the contracting officer shall insert a clause similar to the clause at § 30.15, Restrictions on Federal Public Works Projects, in contractions and solicitations, if—

(1) The contract is awarded on or after December 22, 1987, and before October 1, 1988; and

(2) The contract obligates funds appropriated for use in FY 1988 by the Continuing Resolution or any other law; and

(3) The contract is for the acquisition of construction, alteration and repair, architectural, engineering, or other services directly related to the preparation for, or performance of, construction, alteration, and repair for Federal public works projects inside the United States, U.S. territories, or U.S. possessions.

(b) Unless the Secretary waives the restrictions imposed by section 115 of the Airport Safety Act in accordance with § 30.17 of this part, the contracting officer shall insert a clause similar to the clause at § 30.15, Restrictions on Federal Public Works Projects, in contracts and solicitations relating to any project for which funds, including grant funds, are made available by that Act, whether or not the contract is awarded during fiscal year 1988.

(c) Any contract already awarded that should have contained the clause prescribed in paragraph (a) or (b) of this section, but did not, shall be modified to include the clause. In the event that the contracting officer is unable to modify such contract, the contract shall be canceled at no cost to the Government, unless a waiver is granted in accordance with § 30.17 of this part.

(d) Contracting officers shall insert a provision similar to the solicitation provision at § 30.13 of this part, Restrictions on Public Works Projects—Certification, in solicitations containing the clause at § 30.15 of this part, Restrictions on Federal Public Works Projects.

(e) Any solicitation issued before December 22, 1987, that will result in the award of a contract covered by paragraph (a) of this section after December 22, 1987, and before October 1, 1988, and that should have contained a provision similar to that § 30.13 of this part, but did not, shall be amended to include the provision if the contract has not yet been awarded.

§ 30.13 Restrictions on Federal public works projects: Certification.

As prescribed in § 30.11(c) of this part, the contracting officer shall insert the following provision in solicitations

containing the clause at §30.15, *Restrictions on Federal Public Works Projects:*

RESTRICTIONS ON FEDERAL PUBLIC WORKS PROJECTS—CERTIFICATION

(a) Definitions. The definitions pertaining to this provision are those that are set forth in 49 CFR 30.7–30.9.

(b) Certification. By signing this solicitation, the Offeror certifies that with respect to this solicitation, and any resultant contract, the Offeror—

(1) Is [ ] is not [ ] a contractor of a foreign country included on the list of countries that discriminated against U.S. firms published by the Office of the United States Trade Representative (U.S.T.R.);

(2) Has [ ] has not [ ] entered into any contract or subcontract with a subcontractor of a foreign country included on the list of countries that discriminate against U.S. firms published by the U.S.T.R.; and

(3) Has [ ] has not [ ] entered into any subcontract for any product to be used on the Federal public works project that is produced in a foreign country included on the list of countries that discriminate against U.S. firms published by the U.S.T.R.

(c) Applicability of 18 U.S.C. 1001. This certification in this solicitation provision concerns a matter within the jurisdiction of an agency of the United States and the making of a false, fictitious, or fraudulent certification may render the maker subject to prosecution under Title 18, United States Code, Section 1001.

(d) Notice. The Offeror shall provide immediate written notice to the Contracting Officer if, at any time prior to contract award, the Offeror learns that its certification was erroneous when submitted or has become erroneous by reason of changed circumstances.

(e) Restrictions on contract award. No contract will be awarded to an offeror (1) who is owned or controlled by one or more citizens or nationals of a foreign country included on the list of countries that discriminate against U.S. firms published by the U.S.T.R. or (2) whose subcontractors are owned or controlled by one or more citizens or nationals of a foreign country on such U.S.T.R. list or (3) who incorporates in the public works project any product of a foreign country on such U.S.T.R. list; unless a waiver to these restrictions is granted by the President of the United States or the Secretary of Transportation. (Notice of the granting of a waiver will be published in the FEDERAL REGISTER.)

(f) System. Nothing contained in the foregoing shall be construed to require establishment of a system of records in order to render, in good faith, the certification required by paragraph (b) of this provision. The knowledge and information of an Offeror is not required to exceed that which is normally possessed by a prudent person in the ordinary course of business dealings.

(g) Subcontracts. The Offeror agrees that, if awarded a contract resulting from this solicitation, it will incorporate this solicitation provision, including this paragraph (g), in each solicitation issued under such contract.

[End of Provision]

§30.15 Restrictions on Federal public works projects.

The contracting officer shall insert the following clause in solicitations and contracts as prescribed at §30.11(a) through (b) of this part:

RESTRICTIONS ON FEDERAL PUBLIC WORKS PROJECTS

(a) *Definitions.* The definitions pertaining to this clause are those that are set forth in 49 CFR 30.7—30.9

(b) *General.* This clause implements the procurement provisions contained in the Continuing Resolution on the Fiscal Year 1988 Budget, Public Law No. 100–202, and the Airport and Airway Safety and Capacity Expansion Act of 1987, Public Law No. 100–223.

(c) *Restrictions.* The Contractor shall not knowingly enter into any subcontract under this contract: (1) With a subcontractor of a foreign country included on the list of countries that discriminate against U.S. firms published by the United States Trade Representative (U.S.T.R.); or (2) for the supply of any product for use on the Federal Public works project under this contract that is produced or manufactured in a foreign country included on the list of countries that discriminate against U.S. firms published by the U.S.T.R.

(d) *Certification.* The Contractor may rely upon the certification of a prospective subcontractor that it is not a subcontractor of a foreign country included on the list of countries that discriminates against U.S. firms published by the U.S.T.R. and that products supplied by such subcontractor for use on the Federal public works project under this contract are not products of a foreign country included on the list of countries that discriminate against U.S. firms published by the U.S.T.R., unless the contractor has knowledge that the certification is erroneous.

(e) Erroneous certification. The certification in paragraph (b) of the provision entitled ''Restriction on Federal Public Works Projects—Certification,'' is a material representation of fact upon which reliance was placed when making the award. If it is later determined that the Contractor knowingly

rendered an erroneous certification, in addition to other remedies available to the Government, the Contracting Officer may cancel this contract for default at no cost to the Government.

(f) Cancellation. Unless the restrictions of this clause are waived as provided in paragraph (e) of the provision entitled ''Restriction on Federal Public Works Projects—Certification,'' if the Contractor knowingly enters into a subcontract with a subcontractor that is a subcontractor of a foreign country included on the list of countries that discriminate against U.S. firms published by the U.S.T.R. or that supplies any product for use on the Federal public works project under this contract of a foreign country included on the list of countries that discriminate against U.S. firms published by the U.S.T.R., the Contracting Officer may cancel this contract for default, at no cost to the Government.

(g) Subcontracts. The Contractor shall incorporate this clause, without modification, including this paragraph (g) in all solicitations and subcontracts under this contract:

CERTIFICATION REGARDING RESTRICTIONS ON FEDERAL PUBLIC WORKS PROJECTS—SUBCONTRACTORS

(1) The Offeror/Contractor, by submission of an offer and/or execution of a contract certifies that the Offeror/Contractor is (i) not an Offeror/Contractor owned or controlled by one or more citizens or nationals of a foreign country included on the list of countries that discriminate against U.S. firms published by the United States Trade Representative (U.S.T.R.) or (2) not supplying any product for use on the Federal public works project that is produced or manufactured in a foreign country included on the list of foreign countries that discriminate against U.S. firms published by the U.S.T.R.

THIS CERTIFICATION CONCERNS A MATTER WITHIN THE JURISDICTION OF AN AGENCY OF THE UNITED STATES AND THE MAKING OF A FALSE FICTITIOUS, OR FRAUDULENT CERTIFICATION MAY RENDER THE MAKER SUBJECT TO PROSECUTION UNDER TITLE 18, UNITED STATES CODE, SECTION 1001

(2) The Offeror shall provide immediate written notice to the Contractor if, at any time, the Offeror learns that its certification was erroneous by reason of changed circumstances.

(3) The Contractor shall not knowingly enter into any subcontract under this contract: (i) with a subcontractor of a foreign country included on the list of countries that discriminate against U.S. firms published by the U.S.T.R.; or (ii) for the supply of any product for use on the Federal public works project under this contract that is produced or manufactured in a foreign country included on the list of countries that discriminate against U.S. firms published by the U.S.T.R. The contractor may rely upon the certification in paragraph (g)(1) of this clause unless it has knowledge that the certification is erroneous.

(4) Unless the restrictions of this clause have been waived under the contract for the Federal public works project, if a contractor knowingly enters into a subcontract with a subcontractor that is a subcontractor of a foreign country included on the list of countries that discriminate against U.S. firms published by the U.S.T.R. or that supplies any product for use on the Federal public works project under this contract that is produced or manufactured in a foreign country included on the list of countries that discriminate against U.S. firms published by the U.S.T.R., the Government Contracting Officer may direct, through higher-tier contractors, cancellation of this contract at no cost to the Government.

(5) Definitions. The definitions pertaining to this clause are those that are set forth in 49 CFR 30.7—30.9.

(6) The certification in paragraph (g)(1) of this clause is a material representation of fact upon which reliance was placed when making the award. If it is later determined that the Contractor knowingly rendered an erroneous certification, in addition to other remedies available to the Government, the Government Contracting Officer may direct, through higher-tier Contractors, cancellation of this subcontract at no cost to the Government.

(7) The Contractor agrees to insert this clause, without modification, including this paragraph, in all solicitations and subcontracts under this clause.

[End of Clause]

§ 30.17 Waivers.

(a) The Secretary may waive the restrictions imposed by section 115 of the Airport Safety Act on the use of a product or service in a project if the Secretary determines that:

(1) Application of the restriction to such product, service, or project would not be in the public interest;

(2) Products or services of the same class or kind are not produced or offered in the United States, or in any foreign country that is not listed by the U.S.T.R. in sufficient and reasonable available quantities and of a satisfactory quality; or

(3) Exclusion of such product or service from the project would increase the cost of the overall project contract by more than 20 percent.

(b) The President or the Secretary may waive the restrictions imposed by section 109(a) of the Continuing Resolution with respect to an individual contract if the President or the Secretary determines that such action is necessary in the public interest, on a contract-by-contract basis. The Secretary may apply the factors listed in paragraphs (a)(2) and (a)(3) of this section in determining whether a waiver is in the public interest.

(c) The authority of the President or the Secretary to issue waivers may not be delegated. The Department shall publish notice of any waiver granted pursuant to this part by the President or the Secretary in the FEDERAL REGISTER within ten days. The notice shall describe in detail the contract involved, the specific reasons for granting the waiver, and how the waiver meets the criteria of this section.

§30.19 Buy American Act.

The restrictions of this part are in addition to any other restrictions contained in Federal law, including the Buy American Act, 41 U.S.C. 10a–10d, and Buy American provisions in legislation governing DOT provisions. Normal evaluation methods for implementing the provisions of the Buy American Act in contracts for the construction, alteration, or repair of public buildings or public works will be applied after determining the offeror's eligible for award on the basis of application of the provisions in this part.

PART 31—PROGRAM FRAUD CIVIL REMEDIES

Sec.

31.1 Basis and purpose.
31.2 Definitions.
31.3 Basis for civil penalties and assessments.
31.4 Investigation.
31.5 Review by the reviewing official.
31.6 Prerequisites for issuing a complaint.
31.7 Complaint.
31.8 Service of complaint.
31.9 Answer.
31.10 Default upon failure to answer.
31.11 Referral of complaint and answer to the ALJ.
31.12 Notice of hearing.
31.13 Parties to the hearing.
31.14 Separation of functions.
31.15 Ex parte contacts.
31.16 Disqualification of reviewing official or ALJ.
31.17 Rights of parties.
31.18 Authority of the ALJ.
31.19 Prehearing conferences.
31.20 Disclosure of documents.
31.21 Discovery.
31.22 Exchange of witness lists, statements, and exhibits.
31.23 Subpoenas for attendance at hearing.
31.24 Protective order.
31.25 Fees.
31.26 Filing, form, and service of papers.
31.27 Computation of time.
31.28 Motions.
31.29 Sanctions.
31.30 The hearing and burden of proof.
31.31 Determining the amount of penalties and assessments.
31.32 Location of hearing.
31.33 Witnesses.
31.34 Evidence.
31.35 The record.
31.36 Post-hearing briefs.
31.37 Initial decision.
31.38 Reconsideration of initial decision.
31.39 Appeal to authority head.
31.40 Stays ordered by the Department of Justice.
31.41 Stay pending appeal.
31.42 Judicial review.
31.43 Collection of civil penalties and assessments.
31.44 Right to administrative offset.
31.45 Deposit in Treasury of United States.
31.46 Compromise or settlement.
31.47 Limitations.

AUTHORITY: 31 U.S.C. 3801–3812.

SOURCE: 53 FR 881, Jan. 14, 1988, unless otherwise noted.

§31.1 Basis and purpose.

(a) *Basis.* This part implements the Program Fraud Civil Remedies Act of 1986, Public Law No. 99–509, sections 6101–6104, 100 Stat. 1874 (October 21, 1986), to be codified at 31 U.S.C. 3801–3812. 31 U.S.C. 3809 of the statute requires each authority head to promulgate regulations necessary to implement the provisions of the statute.

(b) *Purpose.* This part (1) establishes administrative procedures for imposing civil penalties and assessments against persons who make, submit, or present, or cause to be made, submitted, or presented, false, fictitious, or fraudulent

claims or written statements to the authority or to certain others, and (2) specifies the hearing and appeal rights of persons subject to allegations of liability for such penalties and assessments.

§ 31.2 Definitions.

ALJ means an Administrative Law Judge in the authority appointed pursuant to 5 U.S.C. 3105 or detailed to the authority pursuant to 5 U.S.C. 3344.

Authority means the Department of Transportation.

Authority head means the Assistant Secretary or Deputy Assistant Secretary for Budget and Programs, Department of Transportation.

Benefit means, in the context of ''statement,'' anything of value, including but not limited to any advantage, preference, privilege, license, permit, favorable decision, ruling, status, or loan guarantee.

Claim means any request, demand, or submission—

(a) Made to the authority for property, services, or money (including money representing grants, loans, insurance, or benefits);

(b) Made to a recipient of property, services, or money from the authority or to a party to a contract with the authority—

(1) For property or services if the United States—

(i) Provided such property or services;

(ii) Provided any portion of the funds for the purchase of such property or services; or

(iii) Will reimburse such recipient or party for the purchase of such property or services; or

(2) For the payment of money (including money representing grants, loans, insurance, or benefits) if the United States—

(i) Provided any portion of the money requested or demanded; or

(ii) Will reimburse such recipient or party for any portion of the money paid on such request or demand; or

(c) Made to the authority which has the effect of decreasing an obligation to pay or account for property, services, or money.

Complaint means the administrative complaint served by the reviewing official on the defendant under § 31.7.

Defendant means any person alleged in a complaint under § 31.7 to be liable for a civil penalty or assessment under § 31.3.

Government means the United States Government.

Individual means a natural person.

Initial decision means the written decision of the ALJ required by §§ 31.10 or 31.37 and includes a revised initial decision issued following a remand or a motion for reconsideration.

Investigating official means the Inspector General of the Department of Transportation or an officer or employee of the Office of Inspector General designated by the Inspector General and serving in a position for which the rate of basic pay is not less than the minimum rate of basic pay for grade GS–16 under the General Schedule.

Knows or has reason to know, means that a person, with respect to a claim or statement—

(a) Has actual knowledge that the claim or statement is false, fictitious, or fraudulent;

(b) Acts in deliberate ignorance of the truth or falsity of the claim or statement; or

(c) Acts in reckless disregard of the truth or falsity of the claim or statement.

Makes, wherever it appears, shall include the terms presents, submits, and causes to be made, presented, or submitted. As the context requires, *making* or *made*, shall likewise include the corresponding forms of such terms.

Person means any individual, partnership, corporation, association, or private organization, and includes the plural of that term.

Representative means an attorney who is a member in good standing of the bar of any State, Territory, or possession of the United States or of the District of Columbia or the Commonwealth of Puerto Rico. This definition is not intended to foreclose pro se appearances. An individual may appear for himself or herself, and a corporation or other entity may appear by an owner, officer, or employee of the corporation or entity.

Reviewing official means the Deputy General Counsel of the Department of Transportation, or other officer or employee of the Department who is designated by the Deputy General Counsel and eligible under 31 U.S.C. 3801(a)(8).

Statement means any representation, certification, affirmation, document, record, or accounting or bookkeeping entry made—

(a) With respect to a claim or to obtain the approval or payment of a claim (including relating to eligibility to make a claim); or

(b) With respect to (including relating to eligibility for)—

(1) A contract with, or bid or proposal for a contract with; or

(2) A grant, loan, or benefit from,

the authority, or any State, political subdivision of a State, or other party, if the United States Government provides any portion of the money or property under such contract or for such grant, loan, or benefit, or if the Government will reimburse such State, political subdivision, or party for any portion of the money or property under such contract or for such grant, loan, or benefit.

§31.3 Basis for civil penalties and assessments.

(a) *Claims.* (1) Except as provided in paragraph (c) of this section, any person who makes a claim that the person knows or has reason to know—

(i) Is false, fictitious, or fraudulent;

(ii) Includes or is supported by any written statement which asserts a material fact which is false, fictitious, or fraudulent;

(iii) Includes or is supported by any written statement that—

(A) Omits a material fact;

(B) Is false, fictitious, or fraudulent as a result of such omission; and

(C) Is a statement in which the person making such statement has a duty to include such material fact; or

(iv) Is for payment for the provision of property or services which the person has not provided as claimed, shall be subject, in addition to any other remedy that may be prescribed by law, to a civil penalty of not more than $5,500 for each such claim.[1]

(2) Each voucher, invoice, claim form, or other individual request or demand for property, services, or money constitutes a separate claim.

(3) A claim shall be considered made to the authority, recipient, or party when such claim is actually made to an agent, fiscal intermediary, or other entity, including any State or political subdivision thereof, acting for or on behalf of the authority, recipient, or party.

(4) Each claim for property, services, or money is subject to a civil penalty regardless of whether such property, services, or money is actually delivered or paid.

(5) If the Government has made any payment (including transferred property or provided services) on a claim, a person subject to a civil penalty under paragraph (a)(1) of this section shall also be subject to an assessment of not more than twice the amount of such claim or that portion thereof that is determined to be in violation of paragraph (a)(1) of this section. Such assessment shall be in lieu of damages sustained by the Government because of such claim.

(b) *Statements.* (1) Except as provided in paragraph (c) of this section, any person who makes a written statement that—

(i) The person knows or has reason to know—

(A) Asserts a material fact which is false, fictitious, or fraudulent; or

(B) Is false, fictitious, or fraudulent because it omits a material fact that the person making the statement has a duty to include in such statement; and

(ii) Contains, or is accompanied by, an express certification or affirmation of the truthfulness and accuracy of the contents of the statement, shall be subject, in addition to any other remedy that may be prescribed by law, to a civil penalty of not more than $5,500.[2]

[1] As adjusted in accordance with the Federal Civil Penalties Inflation Adjustment Act of 1990 (Pub. L. 101–140), as amended by the Debt Collection Improvement Act of 1996 (Pub. L. 104–143, section 31001).

[2] As adjusted in accordance with the Federal Civil Penalties Inflation Adjustment

Continued

(2) Each written representation, certification, or affirmation constitutes a separate statement.

(3) A statement shall be considered made to the authority when such statement is actually made to an agent, fiscal intermediary, or other entity, including any State or political subdivision thereof, acting for or on behalf of the authority.

(c) No proof of specific intent to defraud is required to establish liability under this section.

(d) In any case in which it is determined that more than one person is liable for making a claim or statement under this section, each such person may be held liable for a civil penalty under this section.

(e) In any case in which it is determined that more than one person is liable for making a claim under this section on which the Government has made payment (including transferred property or provided services), an assessment may be imposed against any such person or jointly and severally against any combination of such persons.

[53 FR 881, Jan. 14, 1988, as amended at 62 FR 6720, Feb. 13, 1997]

§ 31.4 Investigation.

(a) If an investigating official concludes that a subpoena pursuant to the authority conferred by 31 U.S.C. 3804(a) is warranted—

(1) The subpoena so issued shall notify the person to whom it is addressed of the authority under which the subpoena is issued and shall identify the records or documents sought;

(2) The investigating official may designate a person to act on his or her behalf to receive the documents sought; and

(3) The person receiving such subpoena shall be required to tender to the investigating official or the person designated to receive the documents a certification that the documents sought have been produced, or that such documents are not available and the reasons therefor, or that such documents, suitably identified, have been withheld based upon the assertion of an identified privilege.

(b) If the investigating official concludes that an action under the Program Fraud Civil Remedies Act may be warranted, the investigating official shall submit a report containing the findings and conclusions of such investigation to the reviewing official.

(c) Nothing in this section shall preclude or limit an investigating official's discretion to refer allegations directly to the Department of Justice for suit under the False Claims Act or other civil relief, or to defer or postpone a report or referral to the reviewing official to avoid interference with a criminal investigation or prosecution.

(d) Nothing in this section modifies any responsibility of an investigating official to report violations of criminal law to the Attorney General.

§ 31.5 Review by the reviewing official.

(a) If, based on the report of the investigating official under § 31.4(b), the reviewing official determines that there is adequate evidence to believe that a person is liable under § 31.3 of this part, the reviewing official shall transmit to the Attorney General a written notice of the reviewing official's intention to issue a complaint under § 31.7.

(b) Such notice shall include—

(1) A statement of the reviewing official's reasons for issuing a complaint;

(2) A statement specifying the evidence that supports the allegations of liability;

(3) A description of the claims or statements upon which the allegations of liability are based;

(4) An estimate of the amount of money or the value of property, services, or other benefits requested or demanded in violation of § 31.3 of this part;

(5) A statement of any exculpatory or mitigating circumstances that may relate to the claims or statements known by the reviewing official or the investigating official; and

(6) A statement that there is a reasonable prospect of collecting an appropriate amount of penalties and assessments.

Act of 1990 (Pub. L. 101–140), as amended by the Debt Collection Improvement Act of 1996 (Pub. L. 104–143, section 31001).

§31.6 Prerequisites for issuing a complaint.

(a) The reviewing official may issue a complaint under §31.7 only if—

(1) The Department of Justice approves the issuance of a complaint in a written statement described in 31 U.S.C. 3803(b)(1), and

(2) In the case of allegations of liability under §31.3(a) with respect to a claim, the reviewing official determines that, with respect to such claim or a group of related claims submitted at the same time such claim is submitted (as defined in paragraph (b) of this section), the amount of money or the value of property or services demanded or requested in violation of §31.3(a) does not exceed $150,000.

(b) For the purposes of this section, a related group of claims submitted at the same time shall include only those claims arising from the same transaction (*e.g.*, grant, loan, application, or contract) that are submitted simultaneously as part of a single request, demand, or submission.

(c) Nothing in this section shall be construed to limit the reviewing official's authority to join in a single complaint against a person's claims that are unrelated or were not submitted simultaneously, regardless of the amount of money, or the value of property or services, demanded or requested.

§31.7 Complaint.

(a) On or after the date the Department of Justice approves the issuance of a complaint in accordance with 31 U.S.C. 3803(b)(1), the reviewing official may serve a complaint on the defendant, as provided in §31.8.

(b) The complaint shall state—

(1) The allegations of liability against the defendant, including the statutory basis for liability, an identification of the claims or statements that are the basis for the alleged liability, and the reasons why liability allegedly arises from such claims or statements;

(2) The maximum amount of penalties and assessments for which the defendant may be held liable;

(3) Instructions for filing an answer to request a hearing, including a specific statement of the defendant's right to request a hearing by filing an answer and to be represented by a representative; and

(4) That failure to file an answer within 30 days of service of the complaint will result in the imposition of the maximum amount of penalties and assessments without right to appeal, as provided in §31.10.

(c) At the same time the reviewing official serves the complaint, he or she shall serve the defendant with a copy of these regulations.

§31.8 Service of complaint.

(a) Service of a complaint must be made by certified or registered mail or by delivery in any manner authorized by Rule 4(d) of the Federal Rules of Civil Procedure. Service of a complaint is complete upon receipt.

(b) Proof of service, stating the name and address of the person on whom the complaint was served, and the manner and date of service, may be made by—

(1) Affidavit of the individual serving the complaint by delivery;

(2) A United States Postal Service return receipt card acknowledging receipt; or

(3) Written acknowledgment of receipt by the defendant or his or her representative.

§31.9 Answer.

(a) The defendant may request a hearing by serving an answer on the reviewing official within 30 days of service of the complaint. Service of an answer shall be made by delivering a copy to the reviewing official or by placing a copy in the United States mail, postage prepaid and addressed to the reviewing official. Service of an answer is complete upon such delivery or mailing. An answer shall be deemed to be a request for hearing.

(b) In the answer, the defendant—

(1) Shall admit or deny each of the allegations of liability made in the complaint;

(2) Shall state any defense on which the defendant intends to rely;

(3) May state any reasons why the defendant contends that the penalties and assessments should be less than the statutory maximum; and

(4) Shall state the name, address, and telephone number of the person authorized by the defendant to act as defendant's representative, if any.

(c) If the defendant is unable to file an answer meeting the requirements of paragraph (b) of this section within the time provided, the defendant may, before the expiration of 30 days from service of the complaint, serve on the reviewing official a general answer denying liability and requesting a hearing, and a request for an extension of time within which to serve an answer meeting the requirements of paragraph (b) of this section. The reviewing official shall file promptly the complaint, the general answer denying liability, and the request for an extension of time as provided in § 31.11. For good cause shown, the ALJ may grant the defendant up to 30 additional days from the original due date within which to serve an answer meeting the requirements of paragraph (b) of this section.

§ 31.10 Default upon failure to answer.

(a) If the defendant does not answer within the time prescribed in § 31.9(a), the reviewing official may refer the complaint to an ALJ by filing the complaint and a statement that defendant has failed to answer on time.

(b) Upon the referral of the complaint, the ALJ shall promptly serve on defendant in the manner prescribed in § 31.8, a notice that an initial decision will be issued under this section.

(c) In addition, the ALJ shall assume the facts alleged in the complaint to be true, and, if such facts establish liability under § 31.3, the ALJ shall issue an initial decision imposing the maximum amount of penalties and assessments allowed under the statute.

(d) Except as otherwise provided in this section, by failing to answer on time, the defendant waives any right to further review of the penalties and assessments imposed under paragraph (c) of this section, and the initial decision shall become final and binding upon the parties 30 days after it is issued.

(e) If, before such an initial decision becomes final, the defendant files a motion seeking to reopen on the grounds that extraordinary circumstances prevented the defendant from answering, the initial decision shall be stayed pending the ALJ's decision on the motion.

(f) If, on such motion, the defendant can demonstrate extraordinary circumstances excusing the failure to answer on time, the ALJ shall withdraw the initial decision in paragraph (c) of this section, if such a decision has been issued, and shall grant the defendant an opportunity to answer the complaint.

(g) A decision of the ALJ denying a defendant's motion under paragraph (e) of this section is not subject to reconsideration under § 31.38.

(h) The defendant may appeal to the authority head the decision denying a motion to reopen by filing a notice of appeal in accordance with § 31.26 within 15 days after the ALJ denies the motion. The timely filing of a notice of appeal shall stay the initial decision until the authority head decides the issue.

(i) If the defendant files a timely notice of appeal, the Docket Clerk shall forward two copies of the notice of appeal to the authority head, and shall forward or make available the record of the proceeding to the authority head.

(j) The authority head shall decide expeditiously whether extraordinary circumstances excuse the defendant's failure to answer on time based solely on the record before the ALJ.

(k) If the authority head decides that extraordinary circumstances excused the defendant's failure to answer on time, the authority head shall remand the case to the ALJ with instructions to grant the defendant an opportunity to answer.

(l) If the authority head decides that the defendant's failure to answer on time is not excused, the authority head shall reinstate the initial decision of the ALJ, which shall become final and binding upon the parties 30 days after the authority head issues such decision.

§ 31.11 Referral of complaint and answer to the ALJ.

Upon receipt of an answer, the reviewing official shall refer the matter to an ALJ by filing the complaint and answer in accordance with § 31.26.

§31.12 Notice of hearing.

(a) When the ALJ receives the complaint and answer, the ALJ shall promptly serve a notice of hearing upon the defendant in the manner prescribed by §31.8. At the time, the ALJ shall send a copy of such notice to the representative for the Government and shall file a copy with the Docket Clerk.

(b) Such notice shall include—

(1) The tentative time and place, and the nature of the hearing;

(2) The legal authority and jurisdiction under which the hearing is to be held;

(3) The matters of fact and law to be asserted;

(4) A description of the procedures for the conduct of the hearing;

(5) The name, address, and telephone number of the representative of the Government and of the defendant, if any; and

(6) Such other matters as the ALJ deems appropriate.

§31.13 Parties to the hearing.

(a) The parties to the hearing shall be the defendant and the authority.

(b) Pursuant to 31 U.S.C. 3730(c)(5), a private plaintiff under the False Claims Act may participate in these proceedings to the extent authorized by the provisions of that Act.

§31.14 Separation of functions.

(a) The investigating official, the reviewing official, and any employee or agent of the authority who takes part in investigating, preparing, or presenting a particular case may not, in such case or a factually related case—

(1) Participate in the hearing as the ALJ;

(2) Participate or advise in the initial decision or the review of the initial decision by the authority head, except as a witness or a representative in public proceedings; or

(3) Make the collection of penalties and assessments under 31 U.S.C. 3806.

(b) The ALJ shall not be responsible to, or subject to the supervision or direction of, the investigating official or the reviewing official.

(c) Except as provided in paragraph (a) of this section, the representative for the Government may be employed anywhere in the authority, including in the offices of either the investigating official or the reviewing official.

§31.15 Ex parte contacts.

No party or person (except employees of the ALJ's office) shall communicate in any way with the ALJ on any matter at issue in a case, unless on notice and opportunity for all parties to participate. This provision does not prohibit a person or party from inquiring about the status of a case or asking routine questions concerning administrative functions or procedures.

§31.16 Disqualification of reviewing official or ALJ.

(a) A reviewing official or ALJ in a particular case may disqualify himself or herself at any time.

(b) A party may file a motion for disqualification of a reviewing official or an ALJ. Such motion shall be accompanied by an affidavit alleging personal bias or other reason for disqualification.

(c) Such motion and affidavit shall be filed promptly upon the party's discovery of reasons requiring disqualification, or such objections shall be deemed waived.

(d) Such affidavit shall state specific facts that support the party's belief that personal bias or other reason for disqualification exists and the time and circumstances of the party's discovery of such facts. It shall be accompanied by a certificate of the representative of record that it is made in good faith.

(e)(1) If the ALJ determines that a reviewing official is disqualified, the ALJ shall dismiss the complaint without prejudice.

(2) If the ALJ disqualifies himself or herself, the case shall be reassigned promptly to another ALJ.

(3) If the ALJ denies a motion to disqualify, the authority head may determine the matter only as part of his or her review of the initial decision upon appeal, if any.

§31.17 Rights of parties.

Except as otherwise limited by this part, all parties may—

(a) Be accompanied, represented, and advised by a representative;

(b) Participate in any conference held by the ALJ;

(c) Conduct discovery;

(d) Agree to stipulations of fact or law, which shall be made part of the record;

(e) Present evidence relevant to the issues at the hearing;

(f) Present and cross-examine witnesses;

(g) Present oral arguments at the hearing as permitted by the ALJ; and

(h) Submit written briefs and proposed findings of fact and conclusions of law after the hearing.

§ 31.18 Authority of the ALJ.

(a) The ALJ shall conduct a fair and impartial hearing, avoid delay, maintain order, and assure that a record of the proceeding is made.

(b) The ALJ has the authority to—

(1) Set and change the date, time, and place of the hearing upon reasonable notice to the parties;

(2) Continue or recess the hearing in whole or in part for a reasonable period of time;

(3) Hold conferences to identify or simplify the issues, or to consider other matters that may aid in the expeditious disposition of the proceeding;

(4) Administer oaths and affirmations;

(5) Issue subpoenas requiring the attendance of witnesses and the production of documents at depositions or at hearings;

(6) Rule on motions and other procedural matters;

(7) Regulate the scope and timing of discovery;

(8) Regulate the course of the hearing and the conduct of representatives and parties;

(9) Examine witnesses;

(10) Receive, rule on, exclude, or limit evidence;

(11) Upon motion of a party, take official notice of facts;

(12) Upon motion of a party, decide cases, in whole or in part, by summary judgment where there is no disputed issue of material fact;

(13) Conduct any conference, argument, or hearing on motions in person or by telephone; and

(14) Exercise such other authority as is necessary to carry out the responsibilities of the ALJ under this part.

(c) The ALJ does not have the authority to find Federal statutes or regulations invalid.

§ 31.19 Prehearing conferences.

(a) The ALJ may schedule prehearing conferences as appropriate.

(b) Upon the motion of any party, the ALJ shall schedule at least one prehearing conference at a reasonable time in advance of the hearing.

(c) The ALJ may use prehearing conferences to discuss the following:

(1) Simplification of the issues;

(2) The necessity or desirability of amendments to the pleadings, including the need for a more definite statement;

(3) Stipulations and admissions of fact or as to the contents and authenticity of documents;

(4) Whether the parties can agree to submission of the case on a stipulated record;

(5) Whether a party chooses to waive appearance at an oral hearing and to submit only documentary evidence (subject to the objection of other parties) and written argument;

(6) Limitation of the number of witnesses;

(7) Scheduling dates for the exchange of witness lists and of proposed exhibits;

(8) Discovery;

(9) The time and place for the hearing; and

(10) Such other matters as may tend to expedite the fair and just disposition of the proceedings.

(d) The ALJ may issue an order containing all matters agreed upon by the parties or ordered by the ALJ at a prehearing conference.

§ 31.20 Disclosure of documents.

(a) Upon written request to the reviewing official, the defendant may review any relevant and material documents, transcripts, records, and other materials that relate to the allegations set out in the complaint and upon which the findings and conclusions of the investigating official under § 31.4(b) are based, unless such documents are subject to a privilege under Federal

law. Upon payment of fees for duplication, the defendant may obtain copies of such documents.

(b) Upon written request to the reviewing official, the defendant also may obtain a copy of all exculpatory information in the possession of the reviewing official or investigating official relating to the allegations in the complaint, even if it is contained in a document that would otherwise be privileged. If the document would otherwise be privileged, only that portion containing exculpatory information must be disclosed.

(c) The notice sent to the Attorney General from the reviewing official as described in §31.5 is not discoverable under any circumstances.

(d) The defendant may file a motion to compel disclosure of the documents subject to the provisions of this section. Such a motion may only be filed following the serving of an answer pursuant to §31.9.

§31.21 Discovery.

(a) The following types of discovery are authorized:

(1) Requests for production of documents for inspection and copying;

(2) Requests for admissions of the authenticity of any relevant document or of the truth of any relevant fact;

(3) Written interrogatories; and

(4) Depositions.

(b) For the purpose of this section and §§31.22 and 31.23, the term ''documents'' includes information, documents, reports, answers, records, accounts, papers, and other data and documentary evidence. Nothing contained herein shall be interpreted to require the creation of a document.

(c) Unless mutually agreed to by the parties, discovery is available only as ordered by the ALJ. The ALJ shall regulate the timing of discovery.

(d) *Motions for discovery*. (1) A party seeking discovery may file a motion. Such a motion shall be accompanied by a copy of the request for production of documents, request for admissions, or interrogatories, or in the case of depositions, a summary of the scope of the proposed deposition.

(2) Within ten days of service, a party may file an opposition to the motion and/or a motion for protective order as provided in §31.24.

(3) The ALJ may grant a motion for discovery only if he or she finds that the discovery sought—

(i) Is necessary for the expeditious, fair, and reasonable consideration of the issues;

(ii) Is not unduly costly or burdensome;

(iii) Will not unduly delay the proceeding; and

(iv) Does not seek privileged information.

(4) The burden of showing that discovery should be allowed is on the party seeking discovery.

(5) The ALJ may grant discovery subject to a protective order under §31.24.

(e) *Depositions*. (1) If a motion for deposition is granted, the ALJ shall issue a subpoena for the deponent, which may require the deponent to produce documents. The subpoena shall specify the time and place at which the deposition will be held.

(2) The party seeking to depose shall serve the subpoena in the manner prescribed in §31.8.

(3) The deponent may file a motion to quash the subpoena or a motion for a protective order within ten days of service. If the ALJ has not acted on such a motion by the return date, such date shall be suspended pending the ALJ's final action on the motion.

(4) The party seeking to depose shall provide for the taking of a verbatim transcript of the deposition, which it shall make available to all other parties for inspection and copying.

(f) Each party shall bear its own costs of discovery.

§31.22 Exchange of witness lists, statements, and exhibits.

(a) At least 15 days before the hearing or at such other time as may be ordered by the ALJ, the parties shall exchange witness lists, copies of prior statements of proposed witnesses, and copies of proposed hearing exhibits, including copies of any written statements that the party intends to offer in lieu of live testimony in accordance with §31.33(b). At the time the above documents are exchanged, any party that intends to rely on the transcript of deposition testimony in lieu of live

testimony at the hearing, if permitted by the ALJ, shall provide each party with a copy of the specific pages of the transcript it intends to introduce into evidence.

(b) If a party objects, the ALJ shall not admit into evidence the testimony of any witness whose name does not appear on the witness list of any exhibit not provided to the opposing party as provided above unless the ALJ finds good cause for the failure or that there is no prejudice to the objecting party.

(c) Unless another party objects within the time set by the ALJ, documents exchanged in accordance with paragraph (a) of this section shall be deemed to be authentic for the purpose of admissibility at the hearing.

§ 31.23 Subpoenas for attendance at hearing.

(a) A party wishing to procure the appearance and testimony of any individual at the hearing may request that the ALJ issue a subpoena.

(b) A subpoena requiring the attendance and testimony of an individual may also require the individual to produce documents at the hearing.

(c) A party seeking a subpoena shall file a written request therefor not less than 15 days before the date fixed for the hearing unless otherwise allowed by the ALJ for good cause shown. Such request shall be accompanied by a proposed subpoena, which shall specify and documents to be produced and shall designate the witnesses and describe the address and location thereof with sufficient particularity to permit such witnesses to be found.

(d) The subpoena shall specify the time and place at which the witness is to appear and any documents the witness is to produce.

(e) The party seeking the subpoena shall serve it in the manner prescribed in § 31.8. A subpoena on a party or upon an individual under the control of party may be served by first class mail.

(f) A party or the individual to whom the subpoena is directed may file a motion to quash the subpoena within ten days after service or on or before the time specified in the subpoena for compliance if it is less than ten days after service. If the ALJ has not acted on such a motion by the return date, such date shall be suspended pending the ALJ's final action on the motion.

§ 31.24 Protective order.

(a) A party or a prospective witness or deponent may file a motion for a protective order with respect to discovery sought by an opposing party or with respect to the hearing, seeking to limit the availability or disclosure of evidence.

(b) In issuing a protective order, the ALJ may make any order which justice requires to protect a party or person from annoyance, embarrassment, oppression, or undue burden or expense, including one or more of the following:

(1) That the discovery not be had;

(2) That the discovery may be had only on specified terms and conditions, including a designation of the time or place;

(3) That the discovery may be had only through a method of discovery other than that requested;

(4) That certain matters not be inquired into, or that the scope of discovery be limited to certain matters;

(5) That discovery be conducted with no one present except persons designated by the ALJ;

(6) That the contents of discovery or evidence be sealed;

(7) That a deposition after being sealed be opened only by order of the ALJ;

(8) That a trade secret or other confidential research, development, commercial information, or facts pertaining to any criminal investigation, proceeding, or other administrative investigation not be disclosed or be disclosed only in a designated way; or

(9) That the parties simultaneously submit to the ALJ specified documents or information enclosed in sealed envelopes to be opened as directed by the ALJ.

§ 31.25 Fees.

The party requesting a subpoena shall pay the cost of the fees and mileage of any witness subpoenaed in the amounts that would be payable to a witness in a proceeding in United States District Court. A check for witness fees and mileage shall accompany the subpoena when served, except that when a subpoena is issued on behalf of

the authority, a check for witness fees and mileage need not accompany the subpoena.

§31.26 Filing, form, and service of papers.

(a) *Filing and form.* (1) A party filing any document under this part shall submit (i) the original and two copies to the Docket Clerk, Documentary Services Division (C–55), room 4107, Department of Transportation, 400 7th Street SW., Washington, DC 20590; and (ii) two copies simultaneously to the ALJ or, if on appeal, to the authority head. The requirements of this paragraph apply to all filings under this part, regardless of whether there is a cross-reference to §31.26.

(2) Every pleading and paper filed in the proceeding shall contain a caption setting forth the title of the action, the case number assigned by the Docket Clerk, and a designation of the paper (*e.g.*, motion to quash subpoena).

(3) Every pleading and paper shall be signed by, and shall contain the address and telephone nunber of, the party or the person on whose behalf the paper was filed, or his or her representative.

(4) Papers are considered filed when they are mailed. Date of mailing may be established by a certificate from the party or its representative or by proof that the document was sent by certified or registered mail.

(b) *Service.* A party filing a document shall, at the time of filing, serve a copy of such document on every other party. Service upon any party of any document other than those required to be served as prescribed in §31.8 shall be made by delivering a copy, or by placing a copy of the document in the United States mail, postage prepaid and addressed, to the party's last known address. When a party is represented by a representative, service shall be made upon such representative in lieu of the actual party.

(c) *Proof of service.* A certificate of the individual serving the document by personal delivery or by mail, setting forth the manner of service, shall be proof of service.

§31.27 Computation of time.

(a) In computing any period of time under this part or in an order issued thereunder, the time begins with the day following the act, event, or default, and includes the last day of the period, unless it is a Saturday, Sunday, or legal holiday observed by the Federal government, in which event it includes the next business day.

(b) When the period of time allowed is less than seven days, intermediate Saturdays, Sundays, and legal holidays observed by the Federal government shall be excluded from the computation.

(c) Where a document has been served or issued by placing it in the United States mail, an additional five days will be added to the the time permitted for any responses.

§31.28 Motions.

(a) Any application to the ALJ for an order or ruling shall be by motion. Motions shall state the relief sought, the authority relied upon, and the facts alleged, and shall be filed and served on all other parties.

(b) Except for motions made during a prehearing conference or at the hearing, all motions shall be in writing. The ALJ may require that oral motions be reduced to writing.

(c) Within 15 days after a written motion is served, or such other time as may be fixed by the ALJ, any party may file a response to such motion.

(d) The ALJ may not grant a written motion before the time for filing response thereto has expired, except upon consent of the parties or following a hearing on the motion, but may overrule or deny such motion without awaiting a response.

(e) The ALJ shall make a reasonable effort to dispose of all outstanding motions prior to the beginning of the hearing.

(f) Except as provided by §§31.21(e)(3) and 31.23(f), which concern subpoenas, the filing or pendency of a motion shall not automatically alter or extend a deadline or return date.

§31.29 Sanctions.

(a) The ALJ may sanction a person, including any party or representative, for—

(1) Failing to comply with an order, rule, or procedure governing the proceeding;

(2) Failing to prosecute or defend an action; or

(3) Engaging in other misconduct that interferes with the speedy, orderly, or fair conduct of the hearing.

(b) Sanctions include but are not limited to those specifically set forth in paragraph (c), (d), and (e) of this section. Any such sanction shall reasonably relate to the severity and nature of the failure or misconduct.

(c) When a party fails to comply with an order, including an order for taking a deposition, the production of evidence within the party's control, or a request for admission, the ALJ may—

(1) Draw an inference in favor of the requesting party with regard to the information sought;

(2) In the case of requests for admission, deem each matter of which an admission is requested to be admitted;

(3) Prohibit the party failing to comply with such order from introducing evidence concerning, or otherwise relying upon, testimony relating to the information sought; and

(4) Strike any part of the pleadings or other submissions of the party failing to comply with such request.

(d) If a party fails to prosecute or defend an action under this part commenced by service of a notice of hearing, the ALJ may dismiss the action or may issue an initial decision imposition penalties and assessments.

(e) The ALJ may refuse to consider any motion, request, response, brief or other document which is not filed in a timely fashion.

§ 31.30 The hearing and burden of proof.

(a) The ALJ shall conduct a hearing on the record in order to determine whether the defendant is liable for a civil penalty or assessment under § 31.3 and, if so, the appropriate amount of any such civil penalty or assessment considering any aggravating or mitigating factors.

(b) The authority shall prove defendent's liability and any aggravating factors by a preponderance of the evidence.

(c) The defendant shall prove any affirmative defenses and any mitigating factors by a preponderance of the evidence.

(d) The hearing shall be open to the public unless otherwise ordered by the ALJ for good cause shown.

§ 31.31 Determining the amount of penalties and assessments.

(a) In determining an appropriate amount of civil penalties and assessments, the ALJ and the authority head, upon appeal, should evaluate any circumstances that mitigate or aggravate the violation and should articulate in their opinions the reasons that support the penalties and assessments they impose. Because of the intangible costs of fraud, the expense of investigating such conduct, and the need to deter others who might be similarly tempted, ordinarily double damages and a significant civil penalty should be imposed.

(b) Although not exhaustive, the following factors are among those that may influence the ALJ and the authority head in determining the amount of penalties and assessments to impose with respect to the misconduct (*i.e.*, the false fictitious, of fraudulent claims or statements) charged in the complaint:

(1) The number of false, fictitious, or fraudulent claims or statements;

(2) The time period over which such claims or statements were made;

(3) The degree of the defendant's culpability with respect to the misconduct;

(4) The amount of money or the value of the property, services, or benefit falsely claimed;

(5) The value of the Government's actual loss as a result of the misconduct, including foreseeable consequential damages and the costs of investigation;

(6) The relationship of the amount imposed as civil penalties to the amount of the Government's loss;

(7) The potential or actual impact of the misconduct upon national defense, public health or safety, or public confidence in the management of Government programs and operations, including particularly the impact on the intended beneficiaries of such programs;

(8) Whether the defendant has engaged in a pattern of the same or similar misconduct;

(9) Whether the defendant attempted to conceal the misconduct;

(10) The degree to which the defendant has involved others in the misconduct or in concealing it;

(11) Where the misconduct of employees or agents is imputed to the defendant, the extent to which the defendant's practices fostered or attempted to preclude such misconduct;

(12) Whether the defendant cooperated in or obstructed an investigation of the misconduct;

(13) Whether the defendant assisted in identifying and prosecuting other wrongdoers;

(14) The complexity of the program or transaction, and the degree of the defendant's sophistication with respect to it, including the extent of the defendant's prior participation in the program or in similar transactions;

(15) Whether the defendant has been found, in any criminal, civil, or administrative proceeding to have engaged in similar misconduct or to have dealt dishonestly with the Government of the United States or of a State, directly or indirectly; and

(16) The need to deter the defendant and others from engaging in the same or similar misconduct.

(c) Nothing in this section shall be construed to limit the ALJ or the authority head from considering any other factors that in any given case may mitigate or aggravate the offense for which penalties and assessments are imposed.

§31.32 Location of hearing.

(a) The hearing may be held—

(1) In any judicial district of the United States in which the defendant resides or transacts business;

(2) In any judicial district of the United States in which the claim or statement in issue was made; or

(3) In such other place as may be agreed upon by the defendant and the ALJ.

(b) Each party shall have the opportunity to present written and oral argument with respect to the location of the hearing.

(c) The hearing shall be held at the place and at the time ordered by the ALJ.

§31.33 Witnesses.

(a) Except as provided in paragraph (b) of this section, testimony at the hearing shall be given orally by witnesses under oath or affirmation.

(b) At the discretion of the ALJ, testimony may be admitted in the form of a written statement or deposition. Any such written statement must be provided to all other parties along with the last known address of such witness, in a manner which allows sufficient time for other parties to subpoena such witness for cross-examination at the hearing. Prior written statements of witnesses proposed to testify at the hearing and deposition transcripts shall be exchanged as provided in §31.22(a).

(c) The ALJ shall exercise reasonable control over the mode and order of interrogating witnesses and presenting evidence so as to (1) make the interrogation and presentation effective for the ascertainment of the truth, (2) avoid needless consumption of time, and (3) protect witnesses from harassment or undue embarrassment.

(d) The ALJ shall permit the parties to conduct such cross-examination as may be required for a full and true disclosure of the facts.

(e) At the discretion of the ALJ, a witness may be cross-examined on matters relevant to the proceeding without regard to the scope of his or her direct examination. To the extent permitted by the ALJ, cross-examination on matters outside the scope of direct examination shall be conducted in the manner of direct examination and may proceed by leading questions only if the witness is a hostile witness, an adverse party, or a witness identified with an adverse party.

(f) Upon motion of any party, the ALJ shall order witnesses excluded so that they cannot hear the testimony of other witnesses. This rule does not authorize exclusion of—

(1) A party who is an individual;

(2) In the case of a party that is not an individual, an officer or employee of the party (i) appearing for the entity

pro se or (ii) designated by the party's representative; or

(3) An individual whose presence is shown by a party to be essential to the presentation of its case, including an individual employed by the Government engaged in assisting the representative for the Government.

§ 31.34 Evidence.

(a) The ALJ shall determine the admissibility of evidence.

(b) Except as provided in this part, the ALJ shall not be bound by the Federal Rules of Evidence. However, the ALJ may apply the Federal Rules of Evidence where appropriate, *e.g.*, to exclude unreliable evidence.

(c) The ALJ shall exclude irrelevant and immaterial evidence.

(d) Although relevant, evidence may be excluded if its probative value is substantially outweighed by the danger of unfair prejudice, confusion of the issues, or by considerations of undue delay or needless presentation of cumulative evidence.

(e) Although relevant, evidence may be excluded if it is privileged under Federal law.

(f) Evidence concerning offers of compromise or settlement shall be inadmissible to the extent provided in Rule 408 of the Federal Rules of Evidence.

(g) The ALJ shall permit the parties to introduce rebuttal witnesses and evidence.

(h) All documents and other evidence offered or taken for the record shall be open to examination by all parties, unless otherwise ordered by the ALJ pursuant to § 31.24.

§ 31.35 The record.

(a) The hearing will be recorded and transcribed. Transcripts may be obtained following the hearing from the ALJ at a cost not to exceed the actual cost of duplication.

(b) The transcript of testimony, exhibits and other evidence admitted at the hearing, and all papers and requests filed in the proceeding constitute the record for the decision by the ALJ and the authority head.

(c) The record may be inspected at the offices of the Docket Clerk (see § 31.26(a)(1) for address) and copied (upon payment of a reasonable fee) by anyone, unless otherwise ordered by the ALJ pursuant to § 31.24.

§ 31.36 Post-hearing briefs.

The ALJ may require the parties to file post-hearing briefs. In any event, any party may file a post-hearing brief. The ALJ shall fix the time for filing such briefs. Such briefs may be accompanied by proposed findings of fact and conclusions of law. The ALJ may permit the parties to file reply briefs.

§ 31.37 Initial decision.

(a) The ALJ shall issue an initial decision based only on the record, which shall contain findings of fact, conclusions of law, and the amount of any penalties and assessments imposed.

(b) The findings of fact shall include a finding on each of the following issues:

(1) Whether the claims or statements identified in the complaint, or any portions thereof, violate § 31.3;

(2) If the person is liable for penalties or assessments, the appropriate amount of any such penalties or assessments considering any mitigating or aggravating factors that he or she finds in the case, such as those described in § 31.31.

(c) The ALJ shall promptly serve the intitial decision on all parties within 90 days after the time for submission of post-hearing briefs and reply briefs (if permitted) has expired. The ALJ shall at the same time serve all parties with a statement describing the right of any defendant determined to be liable for a civil penalty or assessment to file a motion for reconsideration with the ALJ or a notice of appeal with the authority head. If the ALJ fails to meet the deadline contained in this paragraph, he or she shall notify the parties of the reason for the delay and shall set a new deadline.

(d) Unless the initial decision of the ALJ is timely appealed to the authority head, or a motion for reconsideration of the intitial decision is timely filed, the initial decision shall constitute the final decision of the authority head and shall be final and binding on the parties 30 days after it is issued by the ALJ.

§31.38 Reconsideration of initial decision.

(a) Except as provided in paragraph (d) of this section, any party may file a motion for reconsideration of the initial decision within 20 days of receipt of the initial decision. If service was made by mail, receipt will be presumed to be five days from the date of mailing in the absence of contrary proof.

(b) Every such motion must set forth the matters claimed to have been erroneously decided and the nature of the alleged errors. Such motion shall be accompanied by a supporting brief.

(c) Responses to such motions shall be allowed only upon request of the ALJ.

(d) No party may file a motion for reconsideration of an initial decision that has been revised in response to a previous motion for reconsideration.

(e) The ALJ may dispose of a motion for reconsideration by denying it or by issuing a revised initial decision.

(f) If the ALJ denies a motion for reconsideration, the initial decision shall constitute the final decision of the authority head and shall be final and binding on the parties 30 days after the ALJ denies the motion, unless the initial decision is timely appealed to the authority head in accordance with §31.39.

(g) If the ALJ issues a revised initial decision, that decision shall constitute the final decision of the authority head and shall be final and binding on the parties 30 days after it is issued, unless it is timely appealed to the authority head in accordance with §31.39.

§31.39 Appeal to authority head.

(a) Any defendant who has served a timely answer and who is determined in an initial decision to be liable for a civil penalty or assessment may appeal such decision to the authority head by filing a notice of appeal in accordance with this section and §31.26.

(b)(1) A notice of appeal may be filed at any time within 30 days after the ALJ issues an initial decision. However, if another party files a motion for reconsideration under §31.38, consideration of the appeal shall be stayed automatically pending resolution of the motion for reconsideration.

(2) If a motion for reconsideration is timely filed, a notice of appeal may be filed within 30 days after the ALJ denies the motion or issues a revised initial decision, whichever applies.

(3) The authority head may extend the initial 30-day period for an additional 30 days if the defendant files with the authority head a request for an extension within the initial 30-day period and shows good cause.

(c) If the defendant files a timely notice of appeal and the time for filing motions for reconsideration under §31.38 has expired, the Docket Clerk shall forward two copies of the notice of appeal to the authority head, and shall forward or make available the record of the proceeding to the authority head.

(d) A notice of appeal shall be accompanied by a written brief specifying exceptions to the initial decision and reasons supporting the exceptions.

(e) The representative for the Government may file a brief in opposition to exceptions within 30 days of receiving the notice of appeal and accompanying brief.

(f) There is no right to appear personally before the authority head.

(g) There is no right to appeal any interlocutory ruling by the ALJ.

(h) In reviewing the initial decision, the authority head shall not consider any objection that was not raised before the ALJ unless a demonstration is made of extraordinary circumstances causing the failure to raise the objection.

(i) If any party demonstrates to the satisfaction of the authority head that additional evidence not presented at such hearing is material and that there were reasonable grounds for the failure to present such evidence at such hearing, the authority head shall remand the matter to the ALJ for consideration of such additional evidence.

(j) The authority head may affirm, reduce, reverse, compromise, remand, or settle any penalty or assessment determined by the ALJ in any initial decision.

(k) The authority head shall promptly serve each party to the appeal with a copy of the decision of the authority head and with a statement describing the right of any person determined to

be liable for a penalty or assessment to seek judicial review.

(l) Unless a petition for review is filed as provided in 31 U.S.C. 3805 after a defendant has exhausted all administrative remedies under this part and within 60 days after the date on which the authority head serves the defendant with a copy of the authority head's decision, a determination that a defendant is liable under § 31.3 is final and is not subject to judicial review.

§ 31.40 Stays ordered by the Department of Justice.

If at any time the Attorney General or an Assistant Attorney General designated by the Attorney General transmits to the authority head a written finding that continuation of the administrative process described in this part with respect to a claim or statement may adversely affect any pending or potential criminal or civil action related to such claim or statement, the authority head shall stay the process immediately. The authority head may order the process resumed only upon receipt of the written authorization of the Attorney General.

§ 31.41 Stay pending appeal.

(a) An initial decision is stayed automatically pending disposition of a motion for reconsideration or of an appeal to the authority head.

(b) No administrative stay is available following a final decision of the authority head.

§ 31.42 Judicial review.

Section 3805 of title 31, United States Code, authorizes judicial review by an appropriate United States District Court of a final decision of the authority head imposing penalties or assessments under this part and specifies the procedures for such review.

§ 31.43 Collection of civil penalties and assessments.

Sections 3806 and 3808(b) of title 31, United States Code, authorize actions for collection of civil penalties and assessments imposed under this part and specify the procedures for such actions.

§ 31.44 Right to administrative offset.

The amount of any penalty or assessment which has become final, or for which a judgment has been entered under § 31.42 or § 31.43, or any amount agreed upon in a compromise or settlement under § 31.46, may be collected by administrative offset under 31 U.S.C. 3716, except that an administrative offset may not be made under this subsection against a refund of an overpayment of Federal taxes, then or later owing by the United States to the defendant.

§ 31.45 Deposit in Treasury of United States.

All amounts collected pursuant to this part shall be deposited as miscellaneous receipts in the Treasury of the United States, except as provided in 31 U.S.C. 3806(g).

§ 31.46 Compromise or settlement.

(a) Parties may make offers of compromise or settlement at any time.

(b) The reviewing official has the exclusive authority to compromise or settle a case under this part at any time after the date on which the reviewing official is permitted to issue a complaint and before the date on which the ALJ issues an initial decision.

(c) The authority head has exclusive authority to compromise or settle a case under this part at any time after the date on which the ALJ issues an initial decision, except during the pendency of any review under § 31.42 or during the pendency of any action to collect penalties and assessments under § 31.43.

(d) The Attorney General has exclusive authority to compromise or settle a case under this part during the pendency of any review under § 31.42 or of any action to recover penalties and assessments under 31 U.S.C. 3806.

(e) The investigating official may recommend settlement terms to the reviewing official, the authority head, or the Attorney General, as appropriate. The reviewing official may recommend settlement terms to the authority head, or the Attorney General, as appropriate.

(f) Any compromise or settlement must be in writing.

§ 31.47 Limitations.

(a) The notice of hearing with respect to a claim or statement must be served in the manner specified in § 31.8 within 6 years after the date on which such claim or statement is made.

(b) If the defendant fails to serve a timely answer, service of a notice under § 31.10(b) shall be deemed a notice of hearing for purposes of this section.

(c) The statute of limitations may be extended by agreement of the parties.

PART 37—TRANSPORTATION SERVICES FOR INDIVIDUALS WITH DISABILITIES (ADA)

Subpart A—General

Sec.
37.1 Purpose.
37.3 Definitions.
37.5 Nondiscrimination.
37.7 Standards for accessible vehicles.
37.9 Standards for accessible transportation facilities.
37.11 Administrative enforcement.
37.13 Effective date for certain vehicle specifications.
37.15 Temporary suspension of certain detectable warning requirements.
37.16–37.19 [Reserved]

Subpart B—Applicability

37.21 Applicability: General.
37.23 Service under contract.
37.25 University transportation systems.
37.27 Transportation for elementary and secondary education systems.
37.29 Private entities providing taxi service.
37.31 Vanpools.
37.33 Airport transportation systems.
37.35 Supplemental service for other transportation modes.
37.37 Other applications.
37.39 [Reserved]

Subpart C—Transportation Facilities

37.41 Construction of transportation facilities by public entities.
37.43 Alteration of transportation facilities by public entities.
37.45 Construction and alteration of transportation facilities by private entities.
37.47 Key stations in light and rapid rail systems.
37.49 Designation of responsible person(s) for intercity and commuter rail stations.
37.51 Key stations in commuter rail systems.
37.53 Exception for New York and Philadelphia.
37.55 Intercity rail station accessibility.
37.57 Required cooperation.
37.59 Differences in accessibility completion dates.
37.61 Public transportation programs and activities in existing facilities.
37.63–37.69 [Reserved]

Subpart D—Acquisition of Accessible Vehicles by Public Entities

37.71 Purchase or lease of new non-rail vehicles by public entities operating fixed route systems.
37.73 Purchase or lease of used non-rail vehicles by public entities operating fixed route systems.
37.75 Remanufacture of non-rail vehicles and purchase or lease of remanufactured non-rail vehicles by public entities operating fixed route systems.
37.77 Purchase or lease of new non-rail vehicles by public entities operating demand responsive systems for the general public.
37.79 Purchase or lease of new rail vehicles by public entities operating rapid or light rail systems.
37.81 Purchase or lease of used rail vehicles by public entities operating rapid or light rail systems.
37.83 Remanufacture of rail vehicles and purchase or lease of remanufactured rail vehicles by public entities operating rapid or light rail systems.
37.85 Purchase or lease of new intercity and commuter rail cars.
37.87 Purchase or lease of used intercity and commuter rail cars.
37.89 Remanufacture of intercity and commuter rail cars and purchase or lease of remanufactured intercity and commuter rail cars.
37.91 Wheelchair locations and food service on intercity rail trains.
37.93 One car per train rule.
37.95 Ferries and other passenger vessels operated by public entities. [Reserved]
37.97–37.99 [Reserved]

Subpart E—Acquisition of Accessible Vehicles by Private Entities

37.101 Purchase or lease of vehicles by private entities not primarily engaged in the business of transporting people.
37.103 Purchase or lease of new non-rail vehicles by private entities primarily engaged in the business of transporting people.
37.105 Equivalent service standard.
37.107 Acquisition of passenger rail cars by private entities primarily engaged in the business of transporting people.
37.109 Ferries and other passenger vessels operated by private entities. [Reserved]
37.111–37.119 [Reserved]

Subpart F—Paratransit as a Complement to Fixed Route Service

37.121 Requirement for comparable complementary paratransit service.
37.123 ADA paratransit eligibility: Standards.
37.125 ADA paratransit eligibility: Process.
37.127 Complementary paratransit service for visitors.
37.129 Types of service.
37.131 Service criteria for complementary paratransit.
37.133 Subscription service.
37.135 Submission of paratransit plan.
37.137 Paratransit plan development.
37.139 Plan contents.
37.141 Requirements for a joint paratransit plan.
37.143 Paratransit plan implementation.
37.145 State comment on plans.
37.147 Considerations during FTA review.
37.149 Disapproved plans.
37.151 Waiver for undue financial burden.
37.153 FTA waiver determination.
37.155 Factors in decision to grant an undue financial burden waiver.
37.157–37.159 [Reserved]

Subpart G—Provision of Service

37.161 Maintenance of accessible features: General.
37.163 Keeping vehicle lifts in operative condition—public entities.
37.165 Lift and securement use.
37.167 Other service requirements.
37.169 Interim requirements for over-the-road bus service operated by private entities.
37.171 Equivalency requirement for demand responsive service operated by private entities not primarily engaged in the business of transporting people.
37.173 Training requirements.

Subpart H—Over-the-road Buses (OTRBs)

37.181 Applicability dates.
37.183 Purchase or lease of new OTRBs by operators of fixed-route systems.
37.185 Fleet accessibility requirement for OTRB fixed-route systems of large operators.
37.187 Interline service.
37.189 Service requirement for OTRB demand-responsive systems.
37.191 Special provision for small mixed-service operators.
37.193 Interim service requirements.
37.195 Purchase or lease of OTRBs by private entities not primarily in the business of transporting people.
37.197 Remanufactured OTRBs.
37.199 Compensation for failure to provide required vehicles or service.
37.201 Intermediate and rest stops.
37.203 Lift maintenance.
37.205 Additional passengers who use wheelchairs.
37.207 Discriminatory practices.
37.209 Training and other requirements.
37.211 Effect of NHTSA and FHWA safety rules.
37.213 Information collection requirements.
37.215 Review of requirements.

APPENDIX A TO SUBPART H OF PART 37—FORMS FOR ADVANCE NOTICE REQUESTS AND PROVISION OF EQUIVALENT SERVICE
APPENDIX A TO PART 37—STANDARDS FOR ACCESSIBLE TRANSPORTATION FACILITIES
APPENDIX B TO PART 37—FTA REGIONAL OFFICES
APPENDIX C TO PART 37—CERTIFICATIONS
APPENDIX D TO PART 37—CONSTRUCTION AND INTERPRETATIONS OF PROVISIONS OF 49 CFR PART 37

AUTHORITY: 42 U.S.C. 12101–12213; 49 U.S.C. 322.

SOURCE: 56 FR 45621, Sept. 6, 1991, unless otherwise noted.

EDITORIAL NOTE: Nomenclature changes to part 37 appear at 58 FR 63101, Nov. 30, 1993.

Subpart A—General

§ 37.1 Purpose.

The purpose of this part is to implement the transportation and related provisions of titles II and III of the Americans with Disabilities Act of 1990.

§ 37.3 Definitions.

As used in this part:

Accessible means, with respect to vehicles and facilities, complying with the accessibility requirements of parts 37 and 38 of this title.

The Act or *ADA* means the Americans with Disabilities Act of 1990 (Pub. L. 101–336, 104 Stat. 327, 42 U.S.C. 12101–12213 and 47 U.S.C. 225 and 611), as it may be amended from time to time.

Administrator means Administrator of the Federal Transit Administration, or his or her designee.

Alteration means a change to an existing facility, including, but not limited to, remodeling, renovation, rehabilitation, reconstruction, historic restoration, changes or rearrangement in structural parts or elements, and changes or rearrangement in the plan configuration of walls and full-height

partitions. Normal maintenance, reroofing, painting or wallpapering, asbestos removal, or changes to mechanical or electrical systems are not alterations unless they affect the usability of the building or facility.

Automated guideway transit system or *AGT* means a fixed-guideway transit system which operates with automated (driverless) individual vehicles or multi-car trains. Service may be on a fixed schedule or in response to a passenger-activated call button.

Auxiliary aids and services includes:

(1) Qualified interpreters, notetakers, transcription services, written materials, telephone headset amplifiers, assistive listening devices, assistive listening systems, telephones compatible with hearing aids, closed caption decoders, closed and open captioning, text telephones (also known as telephone devices for the deaf, or TDDs), videotext displays, or other effective methods of making aurally delivered materials available to individuals with hearing impairments;

(2) Qualified readers, taped texts, audio recordings, Brailled materials, large print materials, or other effective methods of making visually delivered materials available to individuals with visual impairments;

(3) Acquisition or modification of equipment or devices; or

(4) Other similar services or actions.

Bus means any of several types of self-propelled vehicles, generally rubber-tired, intended for use on city streets, highways, and busways, including but not limited to minibuses, forty- and thirty-foot buses, articulated buses, double-deck buses, and electrically powered trolley buses, used by public entities to provide designated public transportation service and by private entities to provide transportation service including, but not limited to, specified public transportation services. Self-propelled, rubber-tired vehicles designed to look like antique or vintage trolleys are considered buses.

Commerce means travel, trade, transportation, or communication among the several states, between any foreign country or any territory or possession and any state, or between points in the same state but through another state or foreign country.

Commuter authority means any state, local, regional authority, corporation, or other entity established for purposes of providing commuter rail transportation (including, but not necessarily limited to, the New York Metropolitan Transportation Authority, the Connecticut Department of Transportation, the Maryland Department of Transportation, the Southeastern Pennsylvania Transportation Authority, the New Jersey Transit Corporation, the Massachusetts Bay Transportation Authority, the Port Authority Trans-Hudson Corporation, and any successor agencies) and any entity created by one or more such agencies for the purposes of operating, or contracting for the operation of, commuter rail transportation.

Commuter bus service means fixed route bus service, characterized by service predominantly in one direction during peak periods, limited stops, use of multi-ride tickets, and routes of extended length, usually between the central business district and outlying suburbs. Commuter bus service may also include other service, characterized by a limited route structure, limited stops, and a coordinated relationship to another mode of transportation.

Commuter rail car means a rail passenger car obtained by a commuter authority for use in commuter rail transportation.

Commuter rail transportation means short-haul rail passenger service operating in metropolitan and suburban areas, whether within or across the geographical boundaries of a state, usually characterized by reduced fare, multiple ride, and commutation tickets and by morning and evening peak period operations. This term does not include light or rapid rail transportation.

Demand responsive system means any system of transporting individuals, including the provision of designated public transportation service by public entities and the provision of transportation service by private entities, including but not limited to specified public transportation service, which is not a fixed route system.

Designated public transportation means transportation provided by a public entity (other than public school transportation) by bus, rail, or other conveyance (other than transportation by aircraft or intercity or commuter rail transportation) that provides the general public with general or special service, including charter service, on a regular and continuing basis.

Disability means, with respect to an individual, a physical or mental impairment that substantially limits one or more of the major life activities of such individual; a record of such an impairment; or being regarded as having such an impairment.

(1) The phrase *physical or mental impairment* means—

(i) Any physiological disorder or condition, cosmetic disfigurement, or anatomical loss affecting one or more of the following body systems: neurological, musculoskeletal, special sense organs, respiratory including speech organs, cardiovascular, reproductive, digestive, genito-urinary, hemic and lymphatic, skin, and endocrine;

(ii) Any mental or psychological disorder, such as mental retardation, organic brain syndrome, emotional or mental illness, and specific learning disabilities;

(iii) The term *physical or mental impairment* includes, but is not limited to, such contagious or noncontagious diseases and conditions as orthopedic, visual, speech, and hearing impairments; cerebral palsy, epilepsy, muscular dystrophy, multiple sclerosis, cancer, heart disease, diabetes, mental retardation, emotional illness, specific learning disabilities, HIV disease, tuberculosis, drug addiction and alcoholism;

(iv) The phrase *physical or mental impairment* does not include homosexuality or bisexuality.

(2) The phrase *major life activities* means functions such as caring for one's self, performing manual tasks, walking, seeing, hearing, speaking, breathing, learning, and work.

(3) The phrase *has a record of such an impairment* means has a history of, or has been misclassified as having, a mental or physical impairment that substantially limits one or more major life activities.

(4) The phrase *is regarded as having such an impairment* means—

(i) Has a physical or mental impairment that does not substantially limit major life activities, but which is treated by a public or private entity as constituting such a limitation;

(ii) Has a physical or mental impairment that substantially limits a major life activity only as a result of the attitudes of others toward such an impairment; or

(iii) Has none of the impairments defined in paragraph (1) of this definition but is treated by a public or private entity as having such an impairment.

(5) The term *disability* does not include—

(i) Transvestism, transsexualism, pedophilia, exhibitionism, voyeurism, gender identity disorders not resulting from physical impairments, or other sexual behavior disorders;

(ii) Compulsive gambling, kleptomania, or pyromania;

(iii) Psychoactive substance abuse disorders resulting from the current illegal use of drugs.

Facility means all or any portion of buildings, structures, sites, complexes, equipment, roads, walks, passageways, parking lots, or other real or personal property, including the site where the building, property, structure, or equipment is located.

Fixed route system means a system of transporting individuals (other than by aircraft), including the provision of designated public transportation service by public entities and the provision of transportation service by private entities, including, but not limited to, specified public transportation service, on which a vehicle is operated along a prescribed route according to a fixed schedule.

FT Act means the Federal Transit Act of 1964, as amended (49 U.S.C. App. 1601 *et seq.*).

High speed rail means a rail service having the characteristics of intercity rail service which operates primarily on a dedicated guideway or track not used, for the most part, by freight, including, but not limited to, trains on welded rail, magnetically levitated (maglev) vehicles on a special guideway, or other advanced technology vehicles, designed to travel at speeds in

excess of those possible on other types of railroads.

Individual with a disability means a person who has a disability, but does not include an individual who is currently engaging in the illegal use of drugs, when a public or private entity acts on the basis of such use.

Intercity rail passenger car means a rail car, intended for use by revenue passengers, obtained by the National Railroad Passenger Corporation (Amtrak) for use in intercity rail transportation.

Intercity rail transportation means transportation provided by Amtrak.

Light rail means a streetcar-type vehicle operated on city streets, semi-exclusive rights of way, or exclusive rights of way. Service may be provided by step-entry vehicles or by level boarding.

New vehicle means a vehicle which is offered for sale or lease after manufacture without any prior use.

Operates includes, with respect to a fixed route or demand responsive system, the provision of transportation service by a public or private entity itself or by a person under a contractual or other arrangement or relationship with the entity.

Over-the-road bus means a bus characterized by an elevated passenger deck located over a baggage compartment.

Paratransit means comparable transportation service required by the ADA for individuals with disabilities who are unable to use fixed route transportation systems.

Private entity means any entity other than a public entity.

Public entity means:

(1) Any state or local government;

(2) Any department, agency, special purpose district, or other instrumentality of one or more state or local governments; and

(3) The National Railroad Passenger Corporation (Amtrak) and any commuter authority.

Purchase or lease, with respect to vehicles, means the time at which an entity is legally obligated to obtain the vehicles, such as the time of contract execution.

Public school transportation means transportation by schoolbus vehicles of schoolchildren, personnel, and equipment to and from a public elementary or secondary school and school-related activities.

Rapid rail means a subway-type transit vehicle railway operated on exclusive private rights of way with high level platform stations. Rapid rail also may operate on elevated or at grade level track separated from other traffic.

Remanufactured vehicle means a vehicle which has been structurally restored and has had new or rebuilt major components installed to extend its service life.

Secretary means the Secretary of Transportation or his/her designee.

Section 504 means section 504 of the Rehabilitation Act of 1973 (Pub. L. 93–112, 87 Stat. 394, 29 U.S.C. 794), as amended.

Service animal means any guide dog, signal dog, or other animal individually trained to work or perform tasks for an individual with a disability, including, but not limited to, guiding individuals with impaired vision, alerting individuals with impaired hearing to intruders or sounds, providing minimal protection or rescue work, pulling a wheelchair, or fetching dropped items.

Small operator means, in the context of over-the-road buses (OTRBs), a private entity primarily in the business of transporting people that is not a Class I motor carrier. To determine whether an operator has sufficient average annual gross transportation operating revenues to be a Class I motor carrier, its revenues are combined with those of any other OTRB operator with which it is affiliated.

Solicitation means the closing date for the submission of bids or offers in a procurement.

Specified public transportation means transportation by bus, rail, or any other conveyance (other than aircraft) provided by a private entity to the general public, with general or special service (including charter service) on a regular and continuing basis.

Station means, with respect to intercity and commuter rail transportation, the portion of a property located appurtenant to a right of way on which intercity or commuter rail transportation is operated, where such portion

is used by the general public and is related to the provision of such transportation, including passenger platforms, designated waiting areas, restrooms, and, where a public entity providing rail transportation owns the property, concession areas, to the extent that such public entity exercises control over the selection, design, construction, or alteration of the property, but this term does not include flag stops (i.e., stations which are not regularly scheduled stops but at which trains will stop to board or detrain passengers only on signal or advance notice).

Transit facility means, for purposes of determining the number of text telephones needed consistent with section 10.3.1(12) of appendix A to this part, a physical structure the primary function of which is to facilitate access to and from a transportation system which has scheduled stops at the structure. The term does not include an open structure or a physical structure the primary purpose of which is other than providing transportation services.

Used vehicle means a vehicle with prior use.

Vanpool means a voluntary commuter ridesharing arrangement, using vans with a seating capacity greater than 7 persons (including the driver) or buses, which provides transportation to a group of individuals traveling directly from their homes to their regular places of work within the same geographical area, and in which the commuter/driver does not receive compensation beyond reimbursement for his or her costs of providing the service.

Vehicle, as the term is applied to private entities, does not include a rail passenger car, railroad locomotive, railroad freight car, or railroad caboose, or other rail rolling stock described in section 242 of title III of the Act.

Wheelchair means a mobility aid belonging to any class of three or four-wheeled devices, usable indoors, designed for and used by individuals with mobility impairments, whether operated manually or powered. A ''common wheelchair'' is such a device which does not exceed 30 inches in width and 48 inches in length measured two inches above the ground, and does not weigh more than 600 pounds when occupied.

[56 FR 45621, Sept. 6, 1991, as amended at 58 FR 63101, Nov. 30, 1993; 61 FR 25415, May 21, 1996; 63 FR 51690, Sept. 28, 1998]

§ 37.5 Nondiscrimination.

(a) No entity shall discriminate against an individual with a disability in connection with the provision of transportation service.

(b) Notwithstanding the provision of any special transportation service to individuals with disabilities, an entity shall not, on the basis of disability, deny to any individual with a disability the opportunity to use the entity's transportation service for the general public, if the individual is capable of using that service.

(c) An entity shall not require an individual with a disability to use designated priority seats, if the individual does not choose to use these seats.

(d) An entity shall not impose special charges, not authorized by this part, on individuals with disabilities, including individuals who use wheelchairs, for providing services required by this part or otherwise necessary to accommodate them.

(e) An entity shall not require that an individual with disabilities be accompanied by an attendant.

(f) Private entities that are primarily engaged in the business of transporting people and whose operations affect commerce shall not discriminate against any individual on the basis of disability in the full and equal enjoyment of specified transportation services. This obligation includes, with respect to the provision of transportation services, compliance with the requirements of the rules of the Department of Justice concerning eligibility criteria, making reasonable modifications, providing auxiliary aids and services, and removing barriers (28 CFR 36.301—36.306).

(g) An entity shall not refuse to serve an individual with a disability or require anything contrary to this part because its insurance company conditions coverage or rates on the absence of individuals with disabilities or requirements contrary to this part.

(h) It is not discrimination under this part for an entity to refuse to provide

service to an individual with disabilities because that individual engages in violent, seriously disruptive, or illegal conduct. However, an entity shall not refuse to provide service to an individual with disabilities solely because the individual's disability results in appearance or involuntary behavior that may offend, annoy, or inconvenience employees of the entity or other persons.

§37.7 Standards for accessible vehicles.

(a) For purposes of this part, a vehicle shall be considered to be readily accessible to and usable by individuals with disabilities if it meets the requirements of this part and the standards set forth in part 38 of this title.

(b)(1) For purposes of implementing the equivalent facilitation provision in §38.2 of this subtitle, the following parties may submit to the Administrator of the applicable operating administration a request for a determination of equivalent facilitation:

(i) A public or private entity that provides transportation services and is subject to the provisions of subpart D or subpart E this part; or

(ii) The manufacturer of a vehicle or a vehicle component or subsystem to be used by such entity to comply with this part.

(2) The requesting party shall provide the following information with its request:

(i) Entity name, address, contact person and telephone;

(ii) Specific provision of part 38 of this title concerning which the entity is seeking a determination of equivalent facilitation.

(iii) [Reserved]

(iv) Alternative method of compliance, with demonstration of how the alternative meets or exceeds the level of accessibility or usability of the vehicle provided in part 38 of this subtitle; and

(v) Documentation of the public participation used in developing an alternative method of compliance.

(3) In the case of a request by a public entity that provides transportation services subject to the provisions of subpart D of this part, the required public participation shall include the following:

(i) The entity shall contact individuals with disabilities and groups representing them in the community. Consultation with these individuals and groups shall take place at all stages of the development of the request for equivalent facilitation. All documents and other information concerning the request shall be available, upon request, to members of the public.

(ii) The entity shall make its proposed request available for public comment before the request is made final or transmitted to DOT. In making the request available for public review, the entity shall ensure that it is available, upon request, in accessible formats.

(iii) The entity shall sponsor at least one public hearing on the request and shall provide adequate notice of the hearing, including advertisement in appropriate media, such as newspapers of general and special interest circulation and radio announcements.

(4) In the case of a request by a private entity that provides transportation services subject to the provisions of subpart E of this part or a manufacturer, the private entity or manufacturer shall consult, in person, in writing, or by other appropriate means, with representatives of national and local organizations representing people with those disabilities who would be affected by the request.

(5) A determination of compliance will be made by the Administrator of the concerned operating administration on a case-by-case basis, with the concurrence of the Assistant Secretary for Policy and International Affairs.

(6) Determinations of equivalent facilitation are made only with respect to vehicles or vehicle components used in the provision of transportation services covered by subpart D or subpart E of this part, and pertain only to the specific situation concerning which the determination is made. Entities shall not cite these determinations as indicating that a product or method constitute equivalent facilitations in situations other than those to which the determinations specifically pertain. Entities shall not claim that a determination of equivalent facilitation indicates approval or endorsement of any

product or method by the Federal government, the Department of Transportation, or any of its operating administrations.

(c) Over-the-road buses acquired by public entities (or by a contractor to a public entity as provided in § 37.23 of this part) shall comply with § 38.23 and subpart G of part 38 of this title.

[56 FR 45621, Sept. 6, 1991, as amended at 58 FR 63101, Nov. 30, 1993; 61 FR 25416, May 21, 1996]

§ 37.9 Standards for accessible transportation facilities.

(a) For purposes of this part, a transportation facility shall be considered to be readily accessible to and usable by individuals with disabilities if it meets the requirements of this part and the standards set forth in appendix A to this part.

(b) Facility alterations begun before January 26, 1992, in a good faith effort to make a facility accessible to individuals with disabilities may be used to meet the key station requirements set forth in §§ 37.47 and 37.51 of this part, even if these alterations are not consistent with the standards set forth in appendix A to this part, if the modifications complied with the Uniform Federal Accessibility Standard (UFAS) (41 CFR part 101–19, subpart 101–19.6) or ANSI A117.1(1980) (American National Standards Specification for Making Buildings and Facilities Accessible to and Usable by, the Physically Handicapped). This paragraph applies only to alterations of individual elements and spaces and only to the extent that provisions covering those elements or spaces are contained in UFAS or ANSI A117.1, as applicable.

(c) Public entities shall ensure the construction of new bus stop pads are in compliance with section 10.2.1.(1) of appendix A to this part, to the extent construction specifications are within their control.

(d)(1) For purposes of implementing the equivalent facilitation provision in section 2.2 of appendix A to this part, the following parties may submit to the Administrator of the applicable operating administration a request for a determination of equivalent facilitation:

(i)(A) A public or private entity that provides transportation facilities subject to the provisions of subpart C this part, or other appropriate party with the concurrence of the Administrator;

(B) With respect to airport facilities, an entity that is an airport operator subject to the requirements of 49 CFR part 27 or regulations implementing the Americans with Disabilities Act, an air carrier subject to the requirements of 14 CFR part 382, or other appropriate party with the concurrence of the Administrator.

(ii) The manufacturer of a product or accessibility feature to be used in the facility of such entity to comply with this part.

(2) The requesting party shall provide the following information with its request:

(i) Entity name, address, contact person and telephone;

(ii) Specific provision of Appendix A to Part 37 concerning which the entity is seeking a determination of equivalent facilitation.

(iii) [Reserved]

(iv) Alternative method of compliance, with demonstration of how the alternative meets or exceeds the level of accessibility or usability of the vehicle provided in appendix A to this part; and

(v) Documentation of the public participation used in developing an alternative method of compliance.

(3) In the case of a request by a public entity that provides transportation facilities (including an airport operator), or a request by an air carrier with respect to airport facilities, the required public participation shall include the following:

(i) The entity shall contact individuals with disabilities and groups representing them in the community. Consultation with these individuals and groups shall take place at all stages of the development of the request for equivalent facilitation. All documents and other information concerning the request shall be available, upon request, to members of the public.

(ii) The entity shall make its proposed request available for public comment before the request is made final or transmitted to DOT. In making the request available for public review, the

entity shall ensure that it is available, upon request, in accessible formats.

(iii) The entity shall sponsor at least one public hearing on the request and shall provide adequate notice of the hearing, including advertisement in appropriate media, such as newspapers of general and special interest circulation and radio announcements.

(4) In the case of a request by a manufacturer or a private entity other than an air carrier, the manufacturer or private entity shall consult, in person, in writing, or by other appropriate means, with representatives of national and local organizations representing people with those disabilities who would be affected by the request.

(5) A determination of compliance will be made by the Administrator of the concerned operating administration on a case-by-case basis, with the concurrence of the Assistant Secretary for Policy and International Affairs.

(6) Determinations of equivalent facilitation are made only with respect to transportation facilities, and pertain only to the specific situation concerning which the determination is made. Entities shall not cite these determinations as indicating that a products or methods constitute equivalent facilitations in situations other than those to which the determinations specifically pertain. Entities shall not claim that a determination of equivalent facilitation indicates approval or endorsement of any product or method by the Federal government, the Department of Transportation, or any of its operating administrations.

[56 FR 45621, Sept. 6, 1991, as amended at 58 FR 63102, Nov. 30, 1993; 59 FR 46703, Sept. 9, 1994; 61 FR 25416, May 21, 1996]

§37.11 Administrative enforcement.

(a) Recipients of Federal financial assistance from the Department of Transportation are subject to administrative enforcement of the requirements of this part under the provisions of 49 CFR part 27, subpart C.

(b) Public entities, whether or not they receive Federal financial assistance, also are subject to enforcement action as provided by the Department of Justice.

(c) Private entities, whether or not they receive Federal financial assistance, are also subject to enforcement action as provided in the regulations of the Department of Justice implementing title III of the ADA (28 CFR part 36).

[56 FR 45621, Sept. 6, 1991, as amended at 61 FR 25416, May 21, 1996]

§37.13 Effective date for certain vehicle specifications.

(a) The vehicle lift specifications identified in §§38.23(b)(6), 38.83(b)(6), 38.95(b)(6), and 38.125(b)(6) of this title apply to solicitations for vehicles under this part after January 25, 1992.

(b) The vehicle door height requirements for vehicles over 22 feet identified in §38.25(c) of this title apply to solicitations for vehicles under this part after January 25, 1992.

[56 FR 64215, Dec. 9, 1991]

§37.15 Temporary suspension of certain detectable warning requirements.

The detectable warning requirements contained in sections 4.7.7, 4.29.5, and 4.29.6 of appendix A to this part are suspended temporarily until July 26, 2001.

[64 FR 64837, 64838, Nov. 23, 1998]

§§37.16–37.19 [Reserved]

Subpart B—Applicability

§37.21 Applicability: General.

(a) This part applies to the following entities, whether or not they receive Federal financial assistance from the Department of Transportation:

(1) Any public entity that provides designated public transportation or intercity or commuter rail transportation;

(2) Any private entity that provides specified public transportation; and

(3) Any private entity that is not primarily engaged in the business of transporting people but operates a demand responsive or fixed route system.

(b) For entities receiving Federal financial assistance from the Department of Transportation, compliance with applicable requirements of this part is a condition of compliance with section 504 of the Rehabilitation Act of 1973 and of receiving financial assistance.

(c) Entities to which this part applies also may be subject to ADA regulations of the Department of Justice (28 CFR parts 35 or 36, as applicable). The provisions of this part shall be interpreted in a manner that will make them consistent with applicable Department of Justice regulations. In any case of apparent inconsistency, the provisions of this part shall prevail.

§ 37.23 Service under contract.

(a) When a public entity enters into a contractual or other arrangement or relationship with a private entity to operate fixed route or demand responsive service, the public entity shall ensure that the private entity meets the requirements of this part that would apply to the public entity if the public entity itself provided the service.

(b) A private entity which purchases or leases new, used, or remanufactured vehicles, or remanufactures vehicles, for use, or in contemplation of use, in fixed route or demand responsive service under contract or other arrangement or relationship with a public entity, shall acquire accessible vehicles in all situations in which the public entity itself would be required to do so by this part.

(c) A public entity which enters into a contractual or other arrangement or relationship with a private entity to provide fixed route service shall ensure that the percentage of accessible vehicles operated by the public entity in its overall fixed route or demand responsive fleet is not diminished as a result.

(d) A private entity that provides fixed route or demand responsive transportation service under contract or other arrangement with another private entity shall be governed, for purposes of the transportation service involved, by the provisions of this part applicable to the other entity.

§ 37.25 University transportation systems.

(a) Transportation services operated by private institutions of higher education are subject to the provisions of this part governing private entities not primarily engaged in the business of transporting people.

(b) Transportation systems operated by public institutions of higher education are subject to the provisions of this part governing public entities. If a public institution of higher education operates a fixed route system, the requirements of this part governing commuter bus service apply to that system.

§ 37.27 Transportation for elementary and secondary education systems.

(a) The requirements of this part do not apply to public school transportation.

(b) The requirements of this part do not apply to the transportation of school children to and from a private elementary or secondary school, and its school-related activities, if the school is providing transportation service to students with disabilities equivalent to that provided to students without disabilities. The test of equivalence is the same as that provided in § 37.105. If the school does not meet the requirement of this paragraph for exemption from the requirements of this part, it is subject to the requirements of this part for private entities not primarily engaged in transporting people.

[56 FR 45621, Sept. 6, 1991, as amended at 61 FR 25415, May 21, 1996]

§ 37.29 Private entities providing taxi service.

(a) Providers of taxi service are subject to the requirements of this part for private entities primarily engaged in the business of transporting people which provide demand responsive service.

(b) Providers of taxi service are not required to purchase or lease accessible automobiles. When a provider of taxi service purchases or leases a vehicle other than an automobile, the vehicle is required to be accessible unless the provider demonstrates equivalency as provided in § 37.105 of this part. A provider of taxi service is not required to purchase vehicles other than automobiles in order to have a number of accessible vehicles in its fleet.

(c) Private entities providing taxi service shall not discriminate against individuals with disabilities by actions including, but not limited to, refusing to provide service to individuals with disabilities who can use taxi vehicles, refusing to assist with the stowing of

mobility devices, and charging higher fares or fees for carrying individuals with disabilities and their equipment than are charged to other persons.

§ 37.31 Vanpools.

Vanpool systems which are operated by public entities, or in which public entities own or purchase or lease the vehicles, are subject to the requirements of this part for demand responsive service for the general public operated by public entities. A vanpool system in this category is deemed to be providing equivalent service to individuals with disabilities if a vehicle that an individual with disabilities can use is made available to and used by a vanpool in which such an individual chooses to participate.

§ 37.33 Airport transportation systems.

(a) Transportation systems operated by public airport operators, which provide designated public transportation and connect parking lots and terminals or provide transportation among terminals, are subject to the requirements of this part for fixed route or demand responsive systems, as applicable, operated by public entities. Public airports which operate fixed route transportation systems are subject to the requirements of this part for commuter bus service operated by public entities. The provision by an airport of additional accommodations (e.g., parking spaces in a close-in lot) is not a substitute for meeting the requirements of this part.

(b) Fixed-route transportation systems operated by public airport operators between the airport and a limited number of destinations in the area it serves are subject to the provisions of this part for commuter bus systems operated by public entities.

(c) Private jitney or shuttle services that provide transportation between an airport and destinations in the area it serves in a route-deviation or other variable mode are subject to the requirements of this part for private entities primarily engaged in the business of transporting people which provide demand responsive service. They may meet equivalency requirements by such means as sharing or pooling accessible vehicles among operators, in a way that ensures the provision of equivalent service.

§ 37.35 Supplemental service for other transportation modes.

(a) Transportation service provided by bus or other vehicle by an intercity commuter or rail operator, as an extension of or supplement to its rail service, and which connects an intercity rail station and limited other points, is subject to the requirements of this part for fixed route commuter bus service operated by a public entity.

(b) Dedicated bus service to commuter rail systems, with through ticketing arrangements and which is available only to users of the commuter rail system, is subject to the requirements of this part for fixed route commuter bus service operated by a public entity.

§ 37.37 Other applications.

(a) A private entity does not become subject to the requirements of this part for public entities, because it receives an operating subsidy from, is regulated by, or is granted a franchise or permit to operate by a public entity.

(b) Shuttle systems and other transportation services operated by privately-owned hotels, car rental agencies, historical or theme parks, and other public accommodations are subject to the requirements of this part for private entities not primarily engaged in the business of transporting people. Either the requirements for demand responsive or fixed route service may apply, depending upon the characteristics of each individual system of transportation.

(c) Conveyances used by members of the public primarily for recreational purposes rather than for transportation (e.g., amusement park rides, ski lifts, or historic rail cars or trolleys operated in museum settings) are not subject to the requirements of this part. Such conveyances are subject to Department of Justice regulations implementing title II or title III of the ADA (28 CFR part 35 or 36), as applicable.

(d) Transportation services provided by an employer solely for its own employees are not subject to the requirements of this part. Such services are

subject to the regulations of the Equal Employment Opportunity Commission under title I of the ADA (29 CFR part 1630) and, with respect to public entities, the regulations of the Department of Justice under title II of the ADA (28 CFR part 35).

(e) Transportation systems operated by private clubs or establishments exempted from coverage under title II of the Civil Rights Act of 1964 (42 U.S.C. 2000–a(e)) or religious organizations or entities controlled by religious organizations are not subject to the requirements of this part.

(f) If a parent private company is not primarily engaged in the business of transporting people, or is not a place of public accommodation, but a subsidiary company or an operationally distinct segment of the company is primarily engaged in the business of transporting people, the transportation service provided by the subsidiary or segment is subject to the requirements of this part for private entities primarily engaged in the business of transporting people.

(g) High-speed rail systems operated by public entities are subject to the requirements of this part governing intercity rail systems.

(h) Private rail systems providing fixed route or specified public transportation service are subject to the requirements of § 37.107 with respect to the acquisition of rail passenger cars. Such systems are subject to the requirements of the regulations of the Department of Justice implementing title III of the ADA (28 CFR part 36) with respect to stations and other facilities.

§ 37.39 [Reserved]

Subpart C—Transportation Facilities

§ 37.41 Construction of transportation facilities by public entities.

A public entity shall construct any new facility to be used in providing designated public transportation services so that the facility is readily accessible to and usable by individuals with disabilities, including individuals who use wheelchairs. This requirement also applies to the construction of a new station for use in intercity or commuter rail transportation. For purposes of this section, a facility or station is ''new'' if its construction begins (i.e., issuance of notice to proceed) after January 25, 1992, or, in the case of intercity or commuter rail stations, after October 7, 1991.

§ 37.43 Alteration of transportation facilities by public entities.

(a)(1) When a public entity alters an existing facility or a part of an existing facility used in providing designated public transportation services in a way that affects or could affect the usability of the facility or part of the facility, the entity shall make the alterations (or ensure that the alterations are made) in such a manner, to the maximum extent feasible, that the altered portions of the facility are readily accessible to and usable by individuals with disabilities, including individuals who use wheelchairs, upon the completion of such alterations.

(2) When a public entity undertakes an alteration that affects or could affect the usability of or access to an area of a facility containing a primary function, the entity shall make the alteration in such a manner that, to the maximum extent feasible, the path of travel to the altered area and the bathrooms, telephones, and drinking fountains serving the altered area are readily accessible to and usable by individuals with disabilities, including individuals who use wheelchairs, upon completion of the alterations. *Provided,* that alterations to the path of travel, drinking fountains, telephones and bathrooms are not required to be made readily accessible to and usable by individuals with disabilities, including individuals who use wheelchairs, if the cost and scope of doing so would be disproportionate.

(3) The requirements of this paragraph also apply to the alteration of existing intercity or commuter rail stations by the responsible person for, owner of, or person in control of the station.

(4) The requirements of this section apply to any alteration which begins (i.e., issuance of notice to proceed or work order, as applicable) after January 25, 1992, or, in the case of intercity

and commuter rail stations, after October 7, 1991.

(b) As used in this section, the phrase *to the maximum extent feasible* applies to the occasional case where the nature of an existing facility makes it impossible to comply fully with applicable accessibility standards through a planned alteration. In these circumstances, the entity shall provide the maximum physical accessibility feasible. Any altered features of the facility or portion of the facility that can be made accessible shall be made accessible. If providing accessibility to certain individuals with disabilities (e.g., those who use wheelchairs) would not be feasible, the facility shall be made accessible to individuals with other types of disabilities (e.g., those who use crutches, those who have impaired vision or hearing, or those who have other impairments).

(c) As used in this section, a *primary function* is a major activity for which the facility is intended. Areas of transportation facilities that involve primary functions include, but are not necessarily limited to, ticket purchase and collection areas, passenger waiting areas, train or bus platforms, baggage checking and return areas and employment areas (except those involving non-occupiable spaces accessed only by ladders, catwalks, crawl spaces, very narrow passageways, or freight (non-passenger) elevators which are frequented only by repair personnel).

(d) As used in this section, a ''path of travel'' includes a continuous, unobstructed way of pedestrian passage by means of which the altered area may be approached, entered, and exited, and which connects the altered area with an exterior approach (including sidewalks, parking areas, and streets), an entrance to the facility, and other parts of the facility. The term also includes the restrooms, telephones, and drinking fountains serving the altered area. An accessible path of travel may include walks and sidewalks, curb ramps and other interior or exterior pedestrian ramps, clear floor paths through corridors, waiting areas, concourses, and other improved areas, parking access aisles, elevators and lifts, bridges, tunnels, or other passageways between platforms, or a combination of these and other elements.

(e)(1) Alterations made to provide an accessible path of travel to the altered area will be deemed disproportionate to the overall alteration when the cost exceeds 20 percent of the cost of the alteration to the primary function area (without regard to the costs of accessibility modifications).

(2) Costs that may be counted as expenditures required to provide an accessible path of travel include:

(i) Costs associated with providing an accessible entrance and an accessible route to the altered area (e.g., widening doorways and installing ramps);

(ii) Costs associated with making restrooms accessible (e.g., grab bars, enlarged toilet stalls, accessible faucet controls);

(iii) Costs associated with providing accessible telephones (e.g., relocation of phones to an accessible height, installation of amplification devices or TDDs);

(iv) Costs associated with relocating an inaccessible drinking fountain.

(f)(1) When the cost of alterations necessary to make a path of travel to the altered area fully accessible is disproportionate to the cost of the overall alteration, then such areas shall be made accessible to the maximum extent without resulting in disproportionate costs;

(2) In this situation, the public entity should give priority to accessible elements that will provide the greatest access, in the following order:

(i) An accessible entrance;

(ii) An accessible route to the altered area;

(iii) At least one accessible restroom for each sex or a single unisex restroom (where there are one or more restrooms);

(iv) Accessible telephones;

(v) Accessible drinking fountains;

(vi) When possible, other accessible elements (e.g., parking, storage, alarms).

(g) If a public entity performs a series of small alterations to the area served by a single path of travel rather than making the alterations as part of a single undertaking, it shall nonetheless be responsible for providing an accessible path of travel.

(h)(1) If an area containing a primary function has been altered without providing an accessible path of travel to that area, and subsequent alterations of that area, or a different area on the same path of travel, are undertaken within three years of the original alteration, the total cost of alteration to the primary function areas on that path of travel during the preceding three year period shall be considered in determining whether the cost of making that path of travel is disproportionate;

(2) For the first three years after January 26, 1992, only alterations undertaken between that date and the date of the alteration at issue shall be considered in determining if the cost of providing accessible features is disproportionate to the overall cost of the alteration.

(3) Only alterations undertaken after January 26, 1992, shall be considered in determining if the cost of providing an accessible path of travel is disproportionate to the overall cost of the alteration.

§ 37.45 Construction and alteration of transportation facilities by private entities.

In constructing and altering transit facilities, private entities shall comply with the regulations of the Department of Justice implementing Title III of the ADA (28 CFR part 36).

§ 37.47 Key stations in light and rapid rail systems.

(a) Each public entity that provides designated public transportation by means of a light or rapid rail system shall make key stations on its system readily accessible to and usable by individuals with disabilities, including individuals who use wheelchairs. This requirement is separate from and in addition to requirements set forth in § 37.43 of this part.

(b) Each public entity shall determine which stations on its system are key stations. The entity shall identify key stations, using the planning and public participation process set forth in paragraph (d) of this section, and taking into consideration the following criteria:

(1) Stations where passenger boardings exceed average station passenger boardings on the rail system by at least fifteen percent, unless such a station is close to another accessible station;

(2) Transfer stations on a rail line or between rail lines;

(3) Major interchange points with other transportation modes, including stations connecting with major parking facilities, bus terminals, intercity or commuter rail stations, passenger vessel terminals, or airports;

(4) End stations, unless an end station is close to another accessible station; and

(5) Stations serving major activity centers, such as employment or government centers, institutions of higher education, hospitals or other major health care facilities, or other facilities that are major trip generators for individuals with disabilities.

(c)(1) Unless an entity receives an extension under paragraph (c)(2) of this section, the public entity shall achieve accessibility of key stations as soon as possible, but in no case later than July 26, 1993, except that an entity is not required to complete installation of detectable warnings required by section 10.3.2(2) of appendix A to this part until July 26, 1994.

(2) The FTA Administrator may grant an extension of this completion date for key station accessibility for a period up to July 26, 2020, provided that two-thirds of key stations are made accessible by July 26, 2010. Extensions may be granted as provided in paragraph (e) of this section.

(d) The public entity shall develop a plan for compliance for this section. The plan shall be submitted to the appropriate FTA regional office by July 26, 1992. (See appendix B to this part for list.)

(1) The public entity shall consult with individuals with disabilities affected by the plan. The public entity also shall hold at least one public hearing on the plan and solicit comments on it. The plan submitted to FTA shall document this public participation, including summaries of the consultation with individuals with disabilities and the comments received at the hearing and during the comment period. The

plan also shall summarize the public entity's responses to the comments and consultation.

(2) The plan shall establish milestones for the achievement of required accessibility of key stations, consistent with the requirements of this section.

(e) A public entity wishing to apply for an extension of the July 26, 1993, deadline for key station accessibility shall include a request for an extension with its plan submitted to FTA under paragraph (d) of this section. Extensions may be granted only with respect to key stations which need extraordinarily expensive structural changes to, or replacement of, existing facilities (e.g., installations of elevators, raising the entire passenger platform, or alterations of similar magnitude and cost). Requests for extensions shall provide for completion of key station accessibility within the time limits set forth in paragraph (c) of this section. The FTA Administrator may approve, approve with conditions, modify, or disapprove any request for an extension.

[56 FR 45621, Sept. 6, 1991, as amended at 58 FR 63102, Nov. 30, 1993]

§ 37.49 Designation of responsible person(s) for intercity and commuter rail stations.

(a) The responsible person(s) designated in accordance with this section shall bear the legal and financial responsibility for making a key station accessible in the same proportion as determined under this section.

(b) In the case of a station more than fifty percent of which is owned by a public entity, the public entity is the responsible party.

(c) In the case of a station more than fifty percent of which is owned by a private entity the persons providing commuter or intercity rail service to the station are the responsible parties, in a proportion equal to the percentage of all passenger boardings at the station attributable to the service of each, over the entire period during which the station is made accessible.

(d) In the case of a station of which no entity owns more than fifty percent, the owners of the station (other than private entity owners) and persons providing intercity or commuter rail service to the station are the responsible persons.

(1) Half the responsibility for the station shall be assumed by the owner(s) of the station. The owners shall share this responsibility in proportion to their ownership interest in the station, over the period during which the station is made accessible.

(2) The person(s) providing commuter or intercity rail service to the station shall assume the other half of the responsibility. These persons shall share this responsibility. These persons shall share this responsibility for the station in a proportion equal to the percentage of all passenger boardings at the station attributable to the service of each, over the period during which the station is made accessible.

(e) Persons who must share responsibility for station accessibility under paragraphs (c) and (d) of this section may, by agreement, allocate their responsibility in a manner different from that provided in this section.

§ 37.51 Key stations in commuter rail systems.

(a) The responsible person(s) shall make key stations on its system readily accessible to and usable by individuals with disabilities, including individuals who use wheelchairs. This requirement is separate from and in addition to requirements set forth in § 37.43 of this part.

(b) Each commuter authority shall determine which stations on its system are key stations. The commuter authority shall identify key stations, using the planning and public participation process set forth in paragraph (d) of this section, and taking into consideration the following criteria:

(1) Stations where passenger boardings exceed average station passenger boardings on the rail system by at least fifteen percent, unless such a station is close to another accessible station;

(2) Transfer stations on a rail line or between rail lines;

(3) Major interchange points with other transportation modes, including stations connecting with major parking facilities, bus terminals, intercity

or commuter rail stations, passenger vessel terminals, or airports;

(4) End stations, unless an end station is close to another accessible station; and

(5) Stations serving major activity centers, such as employment or government centers, institutions of higher education, hospitals or other major health care facilities, or other facilities that are major trip generators for individuals with disabilities.

(c)(1) Except as provided in this paragraph, the responsible person(s) shall achieve accessibility of key stations as soon as possible, but in no case later than July 26, 1993, except that an entity is not required to complete installation of detectable warnings required by section 10.3.2(2) of appendix A to this part until July 26, 1994.

(2) The FTA Administrator may grant an extension of this deadline for key station accessibility for a period up to July 26, 2010. Extensions may be granted as provided in paragraph (e) of this section.

(d) The commuter authority and responsible person(s) for stations involved shall develop a plan for compliance for this section. This plan shall be completed and submitted to FTA by July 26, 1992.

(1) The commuter authority and responsible person(s) shall consult with individuals with disabilities affected by the plan. The commuter authority and responsible person(s) also shall hold at least one public hearing on the plan and solicit comments on it. The plan shall document this public participation, including summaries of the consultation with individuals with disabilities and the comments received at the hearing and during the comment period. The plan also shall summarize the responsible person(s) responses to the comments and consultation.

(2) The plan shall establish milestones for the achievement of required accessibility of key stations, consistent with the requirements of this section.

(3) The commuter authority and responsible person(s) of each key station identified in the plan shall, by mutual agreement, designate a project manager for the purpose of undertaking the work of making the key station accessible.

(e) Any commuter authority and/or responsible person(s) wishing to apply for an extension of the July 26, 1993, deadline for key station accessibility shall include a request for extension with its plan submitted to under paragraph (d) of this section. Extensions may be granted only in a case where raising the entire passenger platform is the only means available of attaining accessibility or where other extraordinarily expensive structural changes (e.g., installations of elevators, or alterations of magnitude and cost similar to installing an elevator or raising the entire passenger platform) are necessary to attain accessibility. Requests for extensions shall provide for completion of key station accessibility within the time limits set forth in paragraph (c) of this section. The FTA Administrator may approve, approve with conditions, modify, or disapprove any request for an extension.

[56 FR 45621, Sept. 6, 1991, as amended at 58 FR 63102, Nov. 30, 1993]

§ 37.53 Exception for New York and Philadelphia.

(a) The following agreements entered into in New York, New York, and Philadelphia, Pennsylvania, contain lists of key stations for the public entities that are a party to those agreements for those service lines identified in the agreements. The identification of key stations under these agreements is deemed to be in compliance with the requirements of this Subpart.

(1) Settlement Agreement by and among Eastern Paralyzed Veterans Association, Inc., James J. Peters, Terrance Moakley, and Denise Figueroa, individually and as representatives of the class of all persons similarly situated (collectively, ''the EPVA class representatives''); and Metropolitan Transportation Authority, New York City Transit Authority, and Manhattan and Bronx Surface Transit Operating Authority (October 4, 1984).

(2) Settlement Agreement by and between Eastern Paralyzed Veterans Association of Pennsylvania, Inc., and James J. Peters, individually; and Dudley R. Sykes, as Commissioner of the

Philadelphia Department of Public Property, and his successors in office and the City of Philadelphia (collectively ''the City'') and Southeastern Pennsylvania Transportation Authority (June 28, 1989).

(b) To comply with §§37.47 (b) and (d) or 37.51 (b) and (d) of this part, the entities named in the agreements are required to use their public participation and planning processes only to develop and submit to the FTA Administrator plans for timely completion of key station accessibilty, as provided in this subpart.

(c) In making accessible the key stations identified under the agreements cited in this section, the entities named in the agreements are subject to the requirements of §37.9 of this part.

§37.55 Intercity rail station accessibility.

All intercity rail stations shall be made readily accessible to and usable by individuals with disabilities, including individuals who use wheelchairs, as soon as practicable, but in no event later than July 26, 2010. This requirement is separate from and in addition to requirements set forth in §37.43 of this part.

§37.57 Required cooperation.

An owner or person in control of an intercity or commuter rail station shall provide reasonable cooperation to the responsible person(s) for that station with respect to the efforts of the responsible person to comply with the requirements of this subpart.

§37.59 Differences in accessibility completion dates.

Where different completion dates for accessible stations are established under this part for a station or portions of a station (e.g., extensions of different periods of time for a station which serves both rapid and commuter rail systems), accessibility to the following elements of the station shall be achieved by the earlier of the completion dates involved:

(a) Common elements of the station;

(b) Portions of the facility directly serving the rail system with the earlier completion date; and

(c) An accessible path from common elements of the station to portions of the facility directly serving the rail system with the earlier completion date.

§37.61 Public transportation programs and activities in existing facilities.

(a) A public entity shall operate a designated public transportation program or activity conducted in an existing facility so that, when viewed in its entirety, the program or activity is readily accessible to and usable by individuals with disabilities.

(b) This section does not require a public entity to make structural changes to existing facilities in order to make the facilities accessible by individuals who use wheelchairs, unless and to the extent required by §37.43 (with respect to alterations) or §§37.47 or 37.51 of this part (with respect to key stations). Entities shall comply with other applicable accessibility requirements for such facilities.

(c) Public entities, with respect to facilities that, as provided in paragraph (b) of this section, are not required to be made accessible to individuals who use wheelchairs, are not required to provide to such individuals services made available to the general public at such facilities when the individuals could not utilize or benefit from the services.

§§37.63–37.69 [Reserved]

Subpart D—Acquisition of Accessible Vehicles By Public Entities

§37.71 Purchase or lease of new non-rail vehicles by public entities operating fixed route systems.

(a) Except as provided elsewhere in this section, each public entity operating a fixed route system making a solicitation after August 25, 1990, to purchase or lease a new bus or other new vehicle for use on the system, shall ensure that the vehicle is readily accessible to and usable by individuals with disabilities, including individuals who use wheelchairs.

(b) A pubilc entity may purchase or lease a new bus that is not readily accessible to and usable by individuals

with disabilities, including individuals who use wheelchairs, if it applies for, and the FTA Administrator grants, a waiver as provided for in this section.

(c) Before submitting a request for such a waiver, the public entity shall hold at least one public hearing concerning the proposed request.

(d) The FTA Administrator may grant a request for such a waiver if the public entity demonstrates to the FTA Administrator's satisfaction that—

(1) The initial solicitation for new buses made by the public entity specified that all new buses were to be lift-equipped and were to be otherwise accessible to and usable by individuals with disabilities;

(2) Hydraulic, electromechanical, or other lifts for such new buses could not be provided by any qualified lift manufacturer to the manufacturer of such new buses in sufficient time to comply with the solicitation; and

(3) Any further delay in purchasing new buses equipped with such necessary lifts would significantly impair transportation services in the community served by the public entity.

(e) The public entity shall include with its waiver request a copy of the initial solicitation and written documentation from the bus manufacturer of its good faith efforts to obtain lifts in time to comply with the solicitation, and a full justification for the assertion that the delay in bus procurement needed to obtain a lift-equipped bus would significantly impair transportation services in the community. This documentation shall include a specific date at which the lifts could be supplied, copies of advertisements in trade publications and inquiries to trade associations seeking lifts, and documentation of the public hearing.

(f) Any waiver granted by the FTA Administrator under this section shall be subject to the following conditions:

(1) The waiver shall apply only to the particular bus delivery to which the waiver request pertains;

(2) The waiver shall include a termination date, which will be based on information concerning when lifts will become available for installation on the new buses the public entity is purchasing. Buses delivered after this date, even though procured under a solicitation to which a waiver applied, shall be equipped with lifts;

(3) Any bus obtained subject to the waiver shall be capable of accepting a lift, and the public entity shall install a lift as soon as one becomes available;

(4) Such other terms and conditions as the FTA Administrator may impose.

(g)(1) When the FTA Administrator grants a waiver under this section, he/she shall promptly notify the appropriate committees of Congress.

(2) If the FTA Administrator has reasonable cause to believe that a public entity fraudulently applied for a waiver under this section, the FTA Administrator shall:

(i) Cancel the waiver if it is still in effect; and

(ii) Take other appropriate action.

§ 37.73 Purchase or lease of used non-rail vehicles by public entities operating fixed route systems.

(a) Except as provided elsewhere in this section, each public entity operating a fixed route system purchasing or leasing, after August 25, 1990, a used bus or other used vehicle for use on the system, shall ensure that the vehicle is readily accessible to and usable by individuals with disabilities, including individuals who use wheelchairs.

(b) A public entity may purchase or lease a used vehicle for use on its fixed route system that is not readily accessible to and usable by individuals with disabilities if, after making demonstrated good faith efforts to obtain an accessible vehicle, it is unable to do so.

(c) Good faith efforts shall include at least the following steps:

(1) An initial solicitation for used vehicles specifying that all used vehicles are to be lift-equipped and otherwise accessible to and usable by individuals with disabilities, or, if an initial solicitation is not used, a documented communication so stating;

(2) A nationwide search for accessible vehicles, involving specific inquiries to used vehicle dealers and other transit providers; and

(3) Advertising in trade publications and contacting trade associations.

(d) Each public entity purchasing or leasing used vehicles that are not readily accessible to and usable by individuals with disabilities shall retain documentation of the specific good faith efforts it made for three years from the date the vehicles were purchased. These records shall be made available, on request, to the FTA Administrator and the public.

§ 37.75 Remanufacture of non-rail vehicles and purchase or lease of remanufactured non-rail vehicles by public entities operating fixed route systems.

(a) This section applies to any public entity operating a fixed route system which takes one of the following actions:

(1) After August 25, 1990, remanufactures a bus or other vehicle so as to extend its useful life for five years or more or makes a solicitation for such remanufacturing; or

(2) Purchases or leases a bus or other vehicle which has been remanufactured so as to extend its useful life for five years or more, where the purchase or lease occurs after August 25, 1990, and during the period in which the useful life of the vehicle is extended.

(b) Vehicles acquired through the actions listed in paragraph (a) of this section shall, to the maximum extent feasible, be readily accessible to and usable by individuals with disabilities, including individuals who use wheelchairs.

(c) For purposes of this section, it shall be considered feasible to remanufacture a bus or other motor vehicle so as to be readily accessible to and usable by individuals with disabilities, including individuals who use wheelchairs, unless an engineering analysis demonstrates that including accessibility features required by this part would have a significant adverse effect on the structural integrity of the vehicle.

(d) If a public entity operates a fixed route system, any segment of which is included on the National Register of Historic Places, and if making a vehicle of historic character used solely on such segment readily accessible to and usable by individuals with disabilities would significantly alter the historic character of such vehicle, the public entity has only to make (or purchase or lease a remanufactured vehicle with) those modifications to make the vehicle accessible which do not alter the historic character of such vehicle, in consultation with the National Register of Historic Places.

(e) A public entity operating a fixed route system as described in paragraph (d) of this section may apply in writing to the FTA Administrator for a determination of the historic character of the vehicle. The FTA Administrator shall refer such requests to the National Register of Historic Places, and shall rely on its advice in making determinations of the historic character of the vehicle.

§ 37.77 Purchase or lease of new non-rail vehicles by public entities operating a demand responsive system for the general public.

(a) Except as provided in this section, a public entity operating a demand responsive system for the general public making a solicitation after August 25, 1990, to purchase or lease a new bus or other new vehicle for use on the system, shall ensure that the vehicle is readily accessible to and usable by individuals with disabilities, including individuals who use wheelchairs.

(b) If the system, when viewed in its entirety, provides a level of service to individuals with disabilities, including individuals who use wheelchairs, equivalent to the level of service it provides to individuals without disabilities, it may purchase new vehicles that are not readily accessible to and usable by individuals with disabilities.

(c) For purposes of this section, a demand responsive system, when viewed in its entirety, shall be deemed to provide equivalent service if the service available to individuals with disabilities, including individuals who use wheelchairs, is provided in the most integrated setting appropriate to the needs of the individual and is equivalent to the service provided other individuals with respect to the following service characteristics:

(1) Response time;

(2) Fares;

(3) Geographic area of service;

(4) Hours and days of service;

(5) Restrictions or priorities based on trip purpose;

(6) Availability of information and reservations capability; and

(7) Any constraints on capacity or service availability.

(d) A public entity receiving FTA funds under section 18 or a public entity in a small urbanized area which receives FTA funds under Section 9 from a state administering agency rather than directly from FTA, which determines that its service to individuals with disabilities is equivalent to that provided other persons shall, before any procurement of an inaccessible vehicle, file with the appropriate state program office a certificate that it provides equivalent service meeting the standards of paragraph (c) of this section. Public entities operating demand responsive service receiving funds under any other section of the FT Act shall file the certificate with the appropriate FTA regional office. A public entity which does not receive FTA funds shall make such a certificate and retain it in its files, subject to inspection on request of FTA. All certificates under this paragraph may be made and filed in connection with a particular procurement or in advance of a procurement; however, no certificate shall be valid for more than one year. A copy of the required certificate is found in appendix C to this part.

(e) The waiver mechanism set forth in § 37.71(b)–(g) (unavailability of lifts) of this subpart shall also be available to public entities operating a demand responsive system for the general public.

§ 37.79 Purchase or lease of new rail vehicles by public entities operating rapid or light rail systems.

Each public entity operating a rapid or light rail system making a solicitation after August 25, 1990, to purchase or lease a new rapid or light rail vehicle for use on the system shall ensure that the vehicle is readily accessible to and usable by individuals with disabilities, including individuals who use wheelchairs.

§ 37.81 Purchase or lease of used rail vehicles by public entities operating rapid or light rail systems.

(a) Except as provided elsewhere in this section, each public entity operating a rapid or light rail system which, after August 25, 1990, purchases or leases a used rapid or light rail vehicle for use on the system shall ensure that the vehicle is readily accessible to and usable by individuals with disabilities, including individuals who use wheelchairs.

(b) A public entity may purchase or lease a used rapid or light rail vehicle for use on its rapid or light rail system that is not readily accessible to and usable by individuals if, after making demonstrated good faith efforts to obtain an accessible vehicle, it is unable to do so.

(c) Good faith efforts shall include at least the following steps:

(1) The initial solicitation for used vehicles made by the public entity specifying that all used vehicles were to be accessible to and usable by individuals with disabilities, or, if a solicitation is not used, a documented communication so stating;

(2) A nationwide search for accessible vehicles, involving specific inquiries to manufacturers and other transit providers; and

(3) Advertising in trade publications and contacting trade associations.

(d) Each public entity purchasing or leasing used rapid or light rail vehicles that are not readily accessible to and usable by individuals with disabilities shall retain documentation of the specific good faith efforts it made for three years from the date the vehicles were purchased. These records shall be made available, on request, to the FTA Administrator and the public.

§ 37.83 Remanufacture of rail vehicles and purchase or lease of remanufactured rail vehicles by public entities operating rapid or light rail systems.

(a) This section applies to any public entity operating a rapid or light rail system which takes one of the following actions:

(1) After August 25, 1990, remanufactures a light or rapid rail vehicle so as

to extend its useful life for five years or more or makes a solicitation for such remanufacturing;

(2) Purchases or leases a light or rapid rail vehicle which has been remanufactured so as to extend its useful life for five years or more, where the purchase or lease occurs after August 25, 1990, and during the period in which the useful life of the vehicle is extended.

(b) Vehicles acquired through the actions listed in paragraph (a) of this section shall, to the maximum extent feasible, be readily accessible to and usable by individuals with disabilities, including individuals who use wheelchairs.

(c) For purposes of this section, it shall be considered feasible to remanufacture a rapid or light rail vehicle so as to be readily accessible to and usable by individuals with disabilities, including individuals who use wheelchairs, unless an engineering analysis demonstrates that doing so would have a significant adverse effect on the structural integrity of the vehicle.

(d) If a public entity operates a rapid or light rail system any segment of which is included on the National Register of Historic Places and if making a rapid or light rail vehicle of historic character used solely on such segment readily accessible to and usable by individuals with disabilities would significantly alter the historic character of such vehicle, the public entity need only make (or purchase or lease a remanufactured vehicle with) those modifications that do not alter the historic character of such vehicle.

(e) A public entity operating a fixed route system as described in paragraph (d) of this section may apply in writing to the FTA Administrator for a determination of the historic character of the vehicle. The FTA Administrator shall refer such requests to the National Register of Historic Places and shall rely on its advice in making a determination of the historic character of the vehicle.

§ 37.85 Purchase or lease of new intercity and commuter rail cars.

Amtrak or a commuter authority making a solicitation after August 25, 1990, to purchase or lease a new intercity or commuter rail car for use on the system shall ensure that the vehicle is readily accessible to and usable by individuals with disabilities, including individuals who use wheelchairs.

§ 37.87 Purchase or lease of used intercity and commuter rail cars.

(a) Except as provided elsewhere in this section, Amtrak or a commuter authority purchasing or leasing a used intercity or commuter rail car after August 25, 1990, shall ensure that the car is readily accessible to and usable by individuals with disabilities, including individuals who use wheelchairs.

(b) Amtrak or a commuter authority may purchase or lease a used intercity or commuter rail car that is not readily accessible to and usable by individuals if, after making demonstrated good faith efforts to obtain an accessible vehicle, it is unable to do so.

(c) Good faith efforts shall include at least the following steps:

(1) An initial solicitation for used vehicles specifying that all used vehicles accessible to and usable by individuals with disabilities;

(2) A nationwide search for accessible vehicles, involving specific inquiries to used vehicle dealers and other transit providers; and

(3) Advertising in trade publications and contacting trade associations.

(d) When Amtrak or a commuter authority leases a used intercity or commuter rail car for a period of seven days or less, Amtrak or the commuter authority may make and document good faith efforts as provided in this paragraph instead of in the ways provided in paragraph (c) of this section:

(1) By having and implementing, in its agreement with any intercity railroad or commuter authority that serves as a source of used intercity or commuter rail cars for a lease of seven days or less, a provision requiring that the lessor provide all available accessible rail cars before providing any inaccessible rail cars.

(2) By documenting that, when there is more than one source of intercity or commuter rail cars for a lease of seven days or less, the lessee has obtained all available accessible intercity or commuter rail cars from all sources before

obtaining inaccessible intercity or commuter rail cars from any source.

(e) Amtrak and commuter authorities purchasing or leasing used intercity or commuter rail cars that are not readily accessible to and usable by individuals with disabilities shall retain documentation of the specific good faith efforts that were made for three years from the date the cars were purchased. These records shall be made available, on request, to the Federal Railroad Administration or FTA Administrator, as applicable. These records shall be made available to the public, on request.

[56 FR 45621, Sept. 6, 1991, as amended at 58 FR 63102, Nov. 30, 1993]

§ 37.89 Remanufacture of intercity and commuter rail cars and purchase or lease of remanufactured intercity and commuter rail cars.

(a) This section applies to Amtrak or a commuter authority which takes one of the following actions:

(1) Remanufactures an intercity or commuter rail car so as to extend its useful life for ten years or more;

(2) Purchases or leases an intercity or commuter rail car which has been remanufactured so as to extend its useful life for ten years or more.

(b) Intercity and commuter rail cars listed in paragraph (a) of this section shall, to the maximum extent feasible, be readily accessible to and usable by individuals with disabilities, including individuals who use wheelchairs.

(c) For purposes of this section, it shall be considered feasible to remanufacture an intercity or commuter rail car so as to be readily accessible to and usable by individuals with disabilities, including individuals who use wheelchairs, unless an engineering analysis demonstrates that remanufacturing the car to be accessible would have a significant adverse effect on the structural integrity of the car.

§ 37.91 Wheelchair locations and food service on intercity rail trains.

(a) As soon as practicable, but in no event later than July 26, 1995, each person providing intercity rail service shall provide on each train a number of spaces—

(1) To park wheelchairs (to accommodate individuals who wish to remain in their wheelchairs) equal to not less than one half of the number of single level rail passenger coaches in the train; and

(2) To fold and store wheelchairs (to accommodate individuals who wish to transfer to coach seats) equal to not less than one half the number of single level rail passenger coaches in the train.

(b) As soon as practicable, but in no event later than July 26, 2000, each person providing intercity rail service shall provide on each train a number of spaces—

(1) To park wheelchairs (to accommodate individuals who wish to remain in their wheelchairs) equal to not less than the total number of single level rail passenger coaches in the train; and

(2) To fold and store wheelchairs (to accommodate individuals who wish to transfer to coach seats) equal to not less than the total number of single level rail passenger coaches in the train.

(c) In complying with paragraphs (a) and (b) of this section, a person providing intercity rail service may not provide more than two spaces to park wheelchairs nor more than two spaces to fold and store wheelchairs in any one coach or food service car.

(d) Unless not practicable, a person providing intercity rail transportation shall place an accessible car adjacent to the end of a single level dining car through which an individual who uses a wheelchair may enter.

(e) On any train in which either a single level or bi-level dining car is used to provide food service, a person providing intercity rail service shall provide appropriate aids and services to ensure that equivalent food service is available to individuals with disabilities, including individuals who use wheelchairs, and to passengers traveling with such individuals. Appropriate auxiliary aids and services include providing a hard surface on which to eat.

(f) This section does not require the provision of securement devices on intercity rail cars.

§ 37.93 One car per train rule.

(a) The definition of accessible for purposes of meeting the one car per train rule is spelled out in the applicable subpart for each transportation system type in part 38 of this title.

(b) Each person providing intercity rail service and each commuter rail authority shall ensure that, as soon as practicable, but in no event later than July 26, 1995, that each train has one car that is readily accessible to and usable by individuals with disabilities, including individuals who use wheelchairs.

(c) Each public entity providing light or rapid rail service shall ensure that each train, consisting of two or more vehicles, includes at least one car that is readily accessible to and usable by individuals with disabilities, including individuals who use wheelchairs, as soon as practicable but in no case later than July 25, 1995.

§ 37.95 Ferries and other passenger vessels operated by public entities. [Reserved]

§§ 37.97–37.99 [Reserved]

Subpart E—Acquisition of Accessible Vehicles By Private Entities

§ 37.101 Purchase or lease of vehicles by private entities not primarily engaged in the business of transporting people.

(a) *Application.* This section applies to all purchases or leases of vehicles by private entities which are not primarily engaged in the business of transporting people, in which a solicitation for the vehicle is made after August 25, 1990.

(b) *Fixed Route System. Vehicle Capacity Over 16.* If the entity operates a fixed route system and purchases or leases a vehicle with a seating capacity of over 16 passengers (including the driver) for use on the system, it shall ensure that the vehicle is readily accessible to and usable by individuals with disabilities, including individuals who use wheelchairs.

(c) *Fixed Route System. Vehicle Capacity of 16 or Fewer.* If the entity operates a fixed route system and purchases or leases a vehicle with a seating capacity of 16 or fewer passengers (including the driver) for use on the system, it shall ensure that the vehicle is readily accessible to and usable by individuals with disabilities, including individuals who use wheelchairs, unless the system, when viewed in its entirety, meets the standard for equivalent service of § 37.105 of this part.

(d) *Demand Responsive System, Vehicle Capacity Over 16.* If the entity operates a demand responsive system, and purchases or leases a vehicle with a seating capacity of over 16 passengers (including the driver) for use on the system, it shall ensure that the vehicle is readily accessible to and usable by individuals with disabilities, including individuals who use wheelchairs, unless the system, when viewed in its entirety, meets the standard for equivalent service of § 37.105 of this part.

(e) Demand Responsive System, Vehicle Capacity of 16 or Fewer. Entities providing demand responsive transportation covered under this section are not specifically required to ensure that new vehicles with seating capacity of 16 or fewer are accessible to individuals with wheelchairs. These entities are required to ensure that their systems, when viewed in their entirety, meet the equivalent service requirements of §§ 37.171 and 37.105, regardless of whether or not the entities purchase a new vehicle.

[56 FR 45621, Sept. 6, 1991, as amended at 61 FR 25416, May 21, 1996]

§ 37.103 Purchase or lease of new non-rail vehicles by private entities primarily engaged in the business of transporting people.

(a) *Application.* This section applies to all acquisitions of new vehicles by private entities which are primarily engaged in the business of transporting people and whose operations affect commerce, in which a solicitation for the vehicle is made (except as provided in paragraph (d) of this section) after August 25, 1990.

(b) *Fixed route systems.* If the entity operates a fixed route system, and purchases or leases a new vehicle other than an automobile, a van with a seating capacity of less than eight persons (including the driver), or an over-the-

road bus, it shall ensure that the vehicle is readily accessible to and usable by individuals with disabilities, including individuals who use wheelchairs.

(c) *Demand responsive systems.* If the entity operates a demand responsive system, and purchases or leases a new vehicle other than an automobile, a van with a seating capacity of less than eight persons (including the driver), or an over-the-road bus, it shall ensure that the vehicle is readily accessible to and usable by individuals with disabilities, including individuals who use wheelchairs, unless the system, when viewed in its entirety, meets the standard for equivalent service of § 37.105 of this part.

(d) *Vans with a capacity of fewer than 8 persons.* If the entity operates either a fixed route or demand responsive system, and purchases or leases a new van with a seating capacity of fewer than eight persons including the driver (the solicitation for the vehicle being made after February 25, 1992), the entity shall ensure that the vehicle is readily accessible to and usable by individuals with disabilities, including individuals who use wheelchairs, unless the system, when viewed in its entirety, meets the standard for equivalent service of § 37.105 of this part.

§ 37.105 Equivalent service standard.

For purposes of §§ 37.101 and 37.103 of this part, a fixed route system or demand responsive system, when viewed in its entirety, shall be deemed to provide equivalent service if the service available to individuals with disabilities, including individuals who use wheelchairs, is provided in the most integrated setting appropriate to the needs of the individual and is equivalent to the service provided other individuals with respect to the following service characteristics:

(a) (1) Schedules/headways (if the system is fixed route);

(2) Response time (if the system is demand responsive);

(b) Fares;

(c) Geographic area of service;

(d) Hours and days of service;

(e) Availability of information;

(f) Reservations capability (if the system is demand responsive);

(g) Any constraints on capacity or service availability;

(h) Restrictions priorities based on trip purpose (if the system is demand responsive).

§ 37.107 Acquisition of passenger rail cars by private entities primarily engaged in the business of transporting people.

(a) A private entity which is primarily engaged in the business of transporting people and whose operations affect commerce, which makes a solicitation after February 25, 1992, to purchase or lease a new rail passenger car to be used in providing specified public transportation, shall ensure that the car is readily accessible to, and usable by, individuals with disabilities, including individuals who use wheelchairs. The accessibility standards in part 38 of this title which apply depend upon the type of service in which the car will be used.

(b) Except as provided in paragraph (c) of this section, a private entity which is primarily engaged in transporting people and whose operations affect commerce, which remanufactures a rail passenger car to be used in providing specified public transportation to extend its useful life for ten years or more, or purchases or leases such a remanufactured rail car, shall ensure that the rail car, to the maximum extent feasible, is made readily accessible to and usable by individuals with disabilities, including individuals who use wheelchairs. For purposes of this paragraph, it shall be considered feasible to remanufacture a rail passenger car to be readily accessible to and usable by individuals with disabilities, including individuals who use wheelchairs, unless an engineering analysis demonstrates that doing so would have a significant adverse effect on the structural integrity of the car.

(c) Compliance with paragraph (b) of this section is not required to the extent that it would significantly alter the historic or antiquated character of a historic or antiquated rail passenger car, or a rail station served exclusively by such cars, or would result in the violation of any rule, regulation, standard or order issued by the Secretary under the Federal Railroad

Safety Act of 1970. For purposes of this section, a historic or antiquated rail passenger car means a rail passenger car—

(1) Which is not less than 30 years old at the time of its use for transporting individuals;

(2) The manufacturer of which is no longer in the business of manufacturing rail passenger cars; and

(3) Which—

(i) Has a consequential association with events or persons significant to the past; or

(ii) Embodies, or is being restored to embody, the distinctive characteristics of a type of rail passenger car used in the past, or to represent a time period which has passed.

§ 37.109 Ferries and other passenger vessels operated by private entities. [Reserved]

§§ 37.111–37.119 [Reserved]

Subpart F—Paratransit as a Complement to Fixed Route Service

§ 37.121 Requirement for comparable complementary paratransit service.

(a) Except as provided in paragraph (c) of this section, each public entity operating a fixed route system shall provide paratransit or other special service to individuals with disabilities that is comparable to the level of service provided to individuals without disabilities who use the fixed route system.

(b) To be deemed comparable to fixed route service, a complementary paratransit system shall meet the requirements of §§ 37.123–37.133 of this subpart. The requirement to comply with § 37.131 may be modified in accordance with the provisions of this subpart relating to undue financial burden.

(c) Requirements for complementary paratransit do not apply to commuter bus, commuter rail, or intercity rail systems.

§ 37.123 ADA paratransit eligibility: Standards.

(a) Public entities required by § 37.121 of this subpart to provide complementary paratransit service shall provide the service to the ADA paratransit eligible individuals described in paragraph (e) of this section.

(b) If an individual meets the eligibility criteria of this section with respect to some trips but not others, the individual shall be ADA paratransit eligible only for those trips for which he or she meets the criteria.

(c) Individuals may be ADA paratransit eligible on the basis of a permanent or temporary disability.

(d) Public entities may provide complementary paratransit service to persons other than ADA paratransit eligible individuals. However, only the cost of service to ADA paratransit eligible individuals may be considered in a public entity's request for an undue financial burden waiver under §§ 37.151–37.155 of this part.

(e) The following individuals are ADA paratransit eligible:

(1) Any individual with a disability who is unable, as the result of a physical or mental impairment (including a vision impairment), and without the assistance of another individual (except the operator of a wheelchair lift or other boarding assistance device), to board, ride, or disembark from any vehicle on the system which is readily accessible to and usable individuals with disabilities.

(2) Any individual with a disability who needs the assistance of a wheelchair lift or other boarding assistance device and is able, with such assistance, to board, ride and disembark from any vehicle which is readily accessible to and usable by individuals with disabilities if the individual wants to travel on a route on the system during the hours of operation of the system at a time, or within a reasonable period of such time, when such a vehicle is not being used to provide designated public transportation on the route.

(i) An individual is eligible under this paragraph with respect to travel on an otherwise accessible route on which the boarding or disembarking location which the individual would use is one at which boarding or disembarking from the vehicle is precluded as provided in § 37.167(g) of this part.

(ii) An individual using a common wheelchair is eligible under this paragraph if the individual's wheelchair cannot be accommodated on an existing vehicle (e.g., because the vehicle's lift does not meet the standards of part 38 of this title), even if that vehicle is accessible to other individuals with disabilities and their mobility wheelchairs.

(iii) With respect to rail systems, an individual is eligible under this paragraph if the individual could use an accessible rail system, but—

(A) There is not yet one accessible car per train on the system; or

(B) Key stations have not yet been made accessible.

(3) Any individual with a disability who has a specific impairment-related condition which prevents such individual from traveling to a boarding location or from a disembarking location on such system.

(i) Only a specific impairment-related condition which prevents the individual from traveling to a boarding location or from a disembarking location is a basis for eligibility under this paragraph. A condition which makes traveling to boarding location or from a disembarking location more difficult for a person with a specific impairment-related condition than for an individual who does not have the condition, but does not prevent the travel, is not a basis for eligibility under this paragraph.

(ii) Architectural barriers not under the control of the public entity providing fixed route service and environmental barriers (e.g., distance, terrain, weather) do not, standing alone, form a basis for eligibility under this paragraph. The interaction of such barriers with an individual's specific impairment-related condition may form a basis for eligibility under this paragraph, if the effect is to prevent the individual from traveling to a boarding location or from a disembarking location.

(f) Individuals accompanying an ADA paratransit eligible individual shall be provided service as follows:

(1) One other individual accompanying the ADA paratransit eligible individual shall be provided service—

(i) If the ADA paratransit eligible individual is traveling with a personal care attendant, the entity shall provide service to one other individual in addition to the attendant who is accompanying the eligible individual;

(ii) A family member or friend is regarded as a person accompanying the eligible individual, and not as a personal care attendant, unless the family member or friend registered is acting in the capacity of a personal care attendant;

(2) Additional individuals accompanying the ADA paratransit eligible individual shall be provided service, provided that space is available for them on the paratransit vehicle carrying the ADA paratransit eligible individual and that transportation of the additional individuals will not result in a denial of service to ADA paratransit eligible individuals;

(3) In order to be considered as ''accompanying'' the eligible individual for purposes of this paragraph (f), the other individual(s) shall have the same origin and destination as the eligible individual.

§ 37.125 ADA paratransit eligibility: Process.

Each public entity required to provide complementary paratransit service by § 37.121 of this part shall establish a process for determining ADA paratransit eligibility.

(a) The process shall strictly limit ADA paratransit eligibility to individuals specified in § 37.123 of this part.

(b) All information about the process, materials necessary to apply for eligibility, and notices and determinations concerning eligibility shall be made available in accessible formats, upon request.

(c) If, by a date 21 days following the submission of a complete application, the entity has not made a determination of eligibility, the applicant shall be treated as eligible and provided service until and unless the entity denies the application.

(d) The entity's determination concerning eligibility shall be in writing. If the determination is that the individual is ineligible, the determination shall state the reasons for the finding.

(e) The public entity shall provide documentation to each eligible individual stating that he or she is ''ADA Paratransit Eligible.'' The documentation shall include the name of the eligible individual, the name of the transit provider, the telephone number of the entity's paratransit coordinator, an expiration date for eligibility, and any conditions or limitations on the individual's eligibility including the use of a personal care attendant.

(f) The entity may require recertification of the eligibility of ADA paratransit eligible individuals at reasonable intervals.

(g) The entity shall establish an administrative appeal process through which individuals who are denied eligibility can obtain review of the denial.

(1) The entity may require that an appeal be filed within 60 days of the denial of an individual's application.

(2) The process shall include an opportunity to be heard and to present information and arguments, separation of functions (i.e., a decision by a person not involved with the initial decision to deny eligibility), and written notification of the decision, and the reasons for it.

(3) The entity is not required to provide paratransit service to the individual pending the determination on appeal. However, if the entity has not made a decision within 30 days of the completion of the appeal process, the entity shall provide paratransit service from that time until and unless a decision to deny the appeal is issued.

(h) The entity may establish an administrative process to suspend, for a reasonable period of time, the provision of complementary paratransit service to ADA eligible individuals who establish a pattern or practice of missing scheduled trips.

(1) Trips missed by the individual for reasons beyond his or her control (including, but not limited to, trips which are missed due to operator error) shall not be a basis for determining that such a pattern or practice exists.

(2) Before suspending service, the entity shall take the following steps:

(i) Notify the individual in writing that the entity proposes to suspend service, citing with specificity the basis of the proposed suspension and setting forth the proposed sanction.

(ii) Provide the individual an opportunity to be heard and to present information and arguments;

(iii) Provide the individual with written notification of the decision and the reasons for it.

(3) The appeals process of paragraph (g) of this section is available to an individual on whom sanctions have been imposed under this paragraph. The sanction is stayed pending the outcome of the appeal.

(i) In applications for ADA paratransit eligibility, the entity may require the applicant to indicate whether or not he or she travels with a personal care attendant.

§ 37.127 Complementary paratransit service for visitors.

(a) Each public entity required to provide complementary paratransit service under § 37.121 of this part shall make the service available to visitors as provided in this section.

(b) For purposes of this section, a visitor is an individual with disabilities who does not reside in the jurisdiction(s) served by the public entity or other entities with which the public entity provides coordinated complementary paratransit service within a region.

(c) Each public entity shall treat as eligible for its complementary paratransit service all visitors who present documentation that they are ADA paratransit eligible, under the criteria of § 37.125 of this part, in the jurisdiction in which they reside.

(d) With respect to visitors with disabilities who do not present such documentation, the public entity may require the documentation of the individual's place of residence and, if the individual's disability is not apparent, of his or her disability. The entity shall provide paratransit service to individuals with disabilities who qualify as visitors under paragraph (b) of this section. The entity shall accept a certification by such individuals that they are unable to use fixed route transit.

(e) A public entity shall make the service to a visitor required by this section available for any combination

of 21 days during any 365-day period beginning with the visitor's first use of the service during such 365-day period. In no case shall the public entity require a visitor to apply for or receive eligibility certification from the public entity before receiving the service required by this section.

[56 FR 45621, Sept. 6, 1991, as amended at 61 FR 25416, May 21, 1996]

§ 37.129 Types of service.

(a) Except as provided in this section, complementary paratransit service for ADA paratransit eligible persons shall be origin-to-destination service.

(b) Complementary paratransit service for ADA paratransit eligible persons described in § 37.123(e)(2) of this part may also be provided by on-call bus service or paratransit feeder service to an accessible fixed route, where such service enables the individual to use the fixed route bus system for his or her trip.

(c) Complementary paratransit service for ADA eligible persons described in § 37.123(e)(3) of this part also may be provided by paratransit feeder service to and/or from an accessible fixed route.

§ 37.131 Service criteria for complementary paratransit.

The following service criteria apply to complementary paratransit required by § 37.121 of this part.

(a) *Service Area*—(1) *Bus.* (i) The entity shall provide complementary paratransit service to origins and destinations within corridors with a width of three-fourths of a mile on each side of each fixed route. The corridor shall include an area with a three-fourths of a mile radius at the ends of each fixed route.

(ii) Within the core service area, the entity also shall provide service to small areas not inside any of the corridors but which are surrounded by corridors.

(iii) Outside the core service area, the entity may designate corridors with widths from three-fourths of a mile up to one and one half miles on each side of a fixed route, based on local circumstances.

(iv) For purposes of this paragraph, the core service area is that area in which corridors with a width of three-fourths of a mile on each side of each fixed route merge together such that, with few and small exceptions, all origins and destinations within the area would be served.

(2) *Rail.* (i) For rail systems, the service area shall consist of a circle with a radius of ¾ of a mile around each station.

(ii) At end stations and other stations in outlying areas, the entity may designate circles with radii of up to 1½ miles as part of its service area, based on local circumstances.

(3) *Jurisdictional boundaries.* Notwithstanding any other provision of this paragraph, an entity is not required to provide paratransit service in an area outside the boundaries of the jurisdiction(s) in which it operates, if the entity does not have legal authority to operate in that area. The entity shall take all practicable steps to provide paratransit service to any part of its service area.

(b) *Response time.* The entity shall schedule and provide paratransit service to any ADA paratransit eligible person at any requested time on a particular day in response to a request for service made the previous day. Reservations may be taken by reservation agents or by mechanical means.

(1) The entity shall make reservation service available during at least all normal business hours of the entity's administrative offices, as well as during times, comparable to normal business hours, on a day when the entity's offices are not open before a service day.

(2) The entity may negotiate pickup times with the individual, but the entity shall not require an ADA paratransit eligible individual to schedule a trip to begin more than one hour before or after the individual's desired departure time.

(3) The entity may use real-time scheduling in providing complementary paratransit service.

(4) The entity may permit advance reservations to be made up to 14 days in advance of an ADA paratransit eligible individual's desired trips. When an entity proposes to change its reservations system, it shall comply with the

public participation requirements equivalent to those of § 37.131(b) and (c).

(c) *Fares.* The fare for a trip charged to an ADA paratransit eligible user of the complementary paratransit service shall not exceed twice the fare that would be charged to an individual paying full fare (i.e., without regard to discounts) for a trip of similar length, at a similar time of day, on the entity's fixed route system.

(1) In calculating the full fare that would be paid by an individual using the fixed route system, the entity may include transfer and premium charges applicable to a trip of similar length, at a similar time of day, on the fixed route system.

(2) The fares for individuals accompanying ADA paratransit eligible individuals, who are provided service under § 37.123 (f) of this part, shall be the same as for the ADA paratransit eligible individuals they are accompanying.

(3) A personal care attendant shall not be charged for complementary paratransit service.

(4) The entity may charge a fare higher than otherwise permitted by this paragraph to a social service agency or other organization for agency trips (i.e., trips guaranteed to the organization).

(d) *Trip purpose restrictions.* The entity shall not impose restrictions or priorities based on trip purpose.

(e) *Hours and days of service.* The complementary paratransit service shall be available throughout the same hours and days as the entity's fixed route service.

(f) *Capacity constraints.* The entity shall not limit the availability of complementary paratransit service to ADA paratransit eligible individuals by any of the following:

(1) Restrictions on the number of trips an individual will be provided;

(2) Waiting lists for access to the service; or

(3) Any operational pattern or practice that significantly limits the availability of service to ADA paratransit eligible persons.

(i) Such patterns or practices include, but are not limited to, the following:

(A) Substantial numbers of significantly untimely pickups for initial or return trips;

(B) Substantial numbers of trip denials or missed trips;

(C) Substantial numbers of trips with excessive trip lengths.

(ii) Operational problems attributable to causes beyond the control of the entity (including, but not limited to, weather or traffic conditions affecting all vehicular traffic that were not anticipated at the time a trip was scheduled) shall not be a basis for determining that such a pattern or practice exists.

(g) *Additional service.* Public entities may provide complementary paratransit service to ADA paratransit eligible individuals exceeding that provided for in this section. However, only the cost of service provided for in this section may be considered in a public entity's request for an undue financial burden waiver under §§ 37.151–37.155 of this part.

[56 FR 45621, Sept. 6, 1991, as amended at 61 FR 25416, May 21, 1996]

§ 37.133 Subscription service.

(a) This part does not prohibit the use of subscription service by public entities as part of a complementary paratransit system, subject to the limitations in this section.

(b) Subscription service may not absorb more than fifty percent of the number of trips available at a given time of day, unless there is non-subscription capacity.

(c) Notwithstanding any other provision of this part, the entity may establish waiting lists or other capacity constraints and trip purpose restrictions or priorities for participation in the subscription service only.

§ 37.135 Submission of paratransit plan.

(a) *General.* Each public entity operating fixed route transportation service, which is required by § 37.121 to provide complementary paratransit service, shall develop a paratransit plan.

(b) *Initial submission.* Except as provided in § 37.141 of this part, each entity shall submit its initial plan for compliance with the complementary paratransit service provision by January 26,

1992, to the appropriate location identified in paragraph (f) of this section.

(c) *Annual Updates.* Except as provided in this paragraph, each entity shall submit an annual update to its plan on January 26 of each succeeding year.

(1) If an entity has met and is continuing to meet all requirements for complementary paratransit in §§ 37.121–37.133 of this part, the entity may submit to FTA an annual certification of continued compliance in lieu of a plan update. Entities that have submitted a joint plan under § 37.141 may submit a joint certification under this paragraph. The requirements of §§ 37.137 (a) and (b), 37.138 and 37.139 do not apply when a certification is submitted under this paragraph.

(2) In the event of any change in circumstances that results in an entity which has submitted a certification of continued compliance falling short of compliance with §§ 37.121–37.133, the entity shall immediately notify FTA in writing of the problem. In this case, the entity shall also file a plan update meeting the requirements of §§ 37.137–37.139 of this part on the next following January 26 and in each succeeding year until the entity returns to full compliance.

(3) An entity that has demonstrated undue financial burden to the FTA shall file a plan update meeting the requirements of §§ 37.137–37.139 of this part on each January 26 until full compliance with §§ 37.121–37.133 is attained.

(4) If FTA reasonably believes that an entity may not be fully complying with all service criteria, FTA may require the entity to provide an annual update to its plan.

(d) *Phase-in of implementation.* Each plan shall provide full compliance by no later than January 26, 1997, unless the entity has received a waiver based on undue financial burden. If the date for full compliance specified in the plan is after January 26, 1993, the plan shall include milestones, providing for measured, proportional progress toward full compliance.

(e) *Plan implementation.* Each entity shall begin implementation of its plan on January 26, 1992.

(f) *Submission locations.* An entity shall submit its plan to one of the following offices, as appropriate:

(1) The individual state administering agency, if it is—

(i) A section 18 recipient;

(ii) A small urbanized area recipient of section 9 funds administered by the State;

(iii) A participant in a coordinated plan, in which all of the participating entities are eligible to submit their plans to the State; or

(2) The FTA Regional Office (as listed in appendix B to this part) for all other entities required to submit a paratransit plan. This includes an FTA recipient under section 9 of the FT Act; entities submitting a joint plan (unless they meet the requirements of paragraph (f)(1)(iii) of this section), and a public entity not an FT Act recipient.

[56 FR 45621, Sept. 6, 1991, as amended at 61 FR 25416, May 21, 1996; 61 FR 26468, May 28, 1996]

§ 37.137 Paratransit plan development.

(a) *Survey of existing services.* Each submitting entity shall survey the area to be covered by the plan to identify any person or entity (public or private) which provides a paratransit or other special transportation service for ADA paratransit eligible individuals in the service area to which the plan applies.

(b) *Public participation.* Each submitting entity shall ensure public participation in the development of its paratransit plan, including at least the following:

(1) *Outreach.* Each submitting entity shall solicit participation in the development of its plan by the widest range of persons anticipated to use its paratransit service. Each entity shall develop contacts, mailing lists and other appropriate means for notification of opportunities to participate in the development of the paratransit plan;

(2) *Consultation with individuals with disabilities.* Each entity shall contact individuals with disabilities and groups representing them in the community. Consultation shall begin at an early stage in the plan development and should involve persons with disabilities in all phases of plan development. All documents and other information concerning the planning procedure and the

provision of service shall be available, upon request, to members of the public, except where disclosure would be an unwarranted invasion of personal privacy;

(3) *Opportunity for public comment.* The submitting entity shall make its plan available for review before the plan is finalized. In making the plan available for public review, the entity shall ensure that the plan is available upon request in accessible formats;

(4) *Public hearing.* The entity shall sponsor at a minimum one public hearing and shall provide adequate notice of the hearing, including advertisement in appropriate media, such as newspapers of general and special interest circulation and radio announcements; and

(5) *Special requirements.* If the entity intends to phase-in its paratransit service over a multi-year period, or request a waiver based on undue financial burden, the public hearing shall afford the opportunity for interested citizens to express their views concerning the phase-in, the request, and which service criteria may be delayed in implementation.

(c) *Ongoing requirement.* The entity shall create an ongoing mechanism for the participation of individuals with disabilities in the continued development and assessment of services to persons with disabilities. This includes, but is not limited to, the development of the initial plan, any request for an undue financial burden waiver, and each annual submission.

§ 37.139 Plan contents.

Each plan shall contain the following information:

(a) Identification of the entity or entities submitting the plan, specifying for each—

(1) Name and address; and

(2) Contact person for the plan, with telephone number and facsimile telephone number (FAX), if applicable.

(b) A description of the fixed route system as of January 26, 1992 (or subsequent year for annual updates), including—

(1) A description of the service area, route structure, days and hours of service, fare structure, and population served. This includes maps and tables, if appropriate;

(2) The total number of vehicles (bus, van, or rail) operated in fixed route service (including contracted service), and percentage of accessible vehicles and percentage of routes accessible to and usable by persons with disabilities, including persons who use wheelchairs;

(3) Any other information about the fixed route service that is relevant to establishing the basis for comparability of fixed route and paratransit service.

(c) A description of existing paratransit services, including:

(1) An inventory of service provided by the public entity submitting the plan;

(2) An inventory of service provided by other agencies or organizations, which may in whole or in part be used to meet the requirement for complementary paratransit service; and

(3) A description of the available paratransit services in paragraphs (c)(2) and (c)(3) of this section as they relate to the service criteria described in § 37.131 of this part of service area, response time, fares, restrictions on trip purpose, hours and days of service, and capacity constraints; and to the requirements of ADA paratransit eligibility.

(d) A description of the plan to provide comparable paratransit, including:

(1) An estimate of demand for comparable paratransit service by ADA eligible individuals and a brief description of the demand estimation methodology used;

(2) An analysis of differences between the paratransit service currently provided and what is required under this part by the entity(ies) submitting the plan and other entities, as described in paragraph (c) of this section;

(3) A brief description of planned modifications to existing paratransit and fixed route service and the new paratransit service planned to comply with the ADA paratransit service criteria;

(4) A description of the planned comparable paratransit service as it relates to each of the service criteria described in § 37.131 of this part—service area, absence of restrictions or priorities based on trip purpose, response time, fares,

hours and days of service, and lack of capacity constraints. If the paratransit plan is to be phased in, this paragraph shall be coordinated with the information being provided in paragraphs (d)(5) and (d)(6) of this paragraph;

(5) A timetable for implementing comparable paratransit service, with a specific date indicating when the planned service will be completely operational. In no case may full implementation be completed later than January 26, 1997. The plan shall include milestones for implementing phases of the plan, with progress that can be objectively measured yearly;

(6) A budget for comparable paratransit service, including capital and operating expenditures over five years.

(e) A description of the process used to certify individuals with disabilities as ADA paratransit eligible. At a minimum, this must include—

(1) A description of the application and certification process, including—

(i) The availability of information about the process and application materials inaccessible formats;

(ii) The process for determining eligibility according to the provisions of §§ 37.123–37.125 of this part and notifying individuals of the determination made;

(iii) The entity's system and timetable for processing applications and allowing presumptive eligibility; and

(iv) The documentation given to eligible individuals.

(2) A description of the administrative appeals process for individuals denied eligibility.

(3) A policy for visitors, consistent with § 37.127 of this part.

(f) Description of the public participation process including—

(1) Notice given of opportunity for public comment, the date(s) of completed public hearing(s), availability of the plan in accessible formats, outreach efforts, and consultation with persons with disabilities.

(2) A summary of significant issues raised during the public comment period, along with a response to significant comments and discussion of how the issues were resolved.

(g) Efforts to coordinate service with other entities subject to the complementary paratransit requirements of this part which have overlapping or contiguous service areas or jurisdictions.

(h) The following endorsements or certifications:

(1) A resolution adopted by the board of the entity authorizing the plan, as submitted. If more than one entity is submitting the plan there must be an authorizing resolution from each board. If the entity does not function with a board, a statement shall be submitted by the entity's chief executive;

(2) In urbanized areas, certification by the Metropolitan Planning Organization (MPO) that it has reviewed the plan and that the plan is in conformance with the transportation plan developed under the Federal Transit/Federal Highway Administration joint planning regulation (49 CFR part 613 and 23 CFR part 450). In a service area which is covered by more than one MPO, each applicable MPO shall certify conformity of the entity's plan. The provisions of this paragraph do not apply to non-FTA recipients;

(3) A certification that the survey of existing paratransit service was conducted as required in § 37.137(a) of this part;

(4) To the extent service provided by other entities is included in the entity's plan for comparable paratransit service, the entity must certify that:

(i) ADA paratransit eligible individuals have access to the service;

(ii) The service is provided in the manner represented; and

(iii) Efforts will be made to coordinate the provision of paratransit service by other providers.

(i) A request for a waiver based on undue financial burden, if applicable. The waiver request should include information sufficient for FTA to consider the factors in § 37.155 of this part. If a request for an undue financial burden waiver is made, the plan must include a description of additional paratransit services that would be provided to achieve full compliance with the requirement for comparable paratransit in the event the waiver is not granted, and the timetable for the implementation of these additional services.

(j) *Annual plan updates.* (1) The annual plan updates submitted January 26, 1993, and annually thereafter, shall

include information necessary to update the information requirements of this section. Information submitted annually must include all significant changes and revisions to the timetable for implementation;

(2) If the paratransit service is being phased in over more than one year, the entity must demonstrate that the milestones identified in the current paratransit plans have been achieved. If the milestones have not been achieved, the plan must explain any slippage and what actions are being taken to compensate for the slippage.

(3) The annual plan must describe specifically the means used to comply with the public participation requirements, as described in § 37.137 of this part.

§ 37.141 Requirements for a joint paratransit plan.

(a) Two or more entities with overlapping or contiguous service areas or jurisdictions may develop and submit a joint plan providing for coordinated paratransit service. Joint plans shall identify the participating entities and indicate their commitment to participate in the plan.

(b) To the maximum extent feasible, all elements of the coordinated plan shall be submitted on January 26, 1992. If a coordinated plan is not completed by January 26, 1992, those entities intending to coordinate paratransit service must submit a general statement declaring their intention to provide coordinated service and each element of the plan specified in § 37.139 to the extent practicable. In addition, the plan must include the following certifications from each entity involved in the coordination effort:

(1) A certification that the entity is committed to providing ADA paratransit service as part of a coordinated plan.

(2) A certification from each public entity participating in the plan that it will maintain current levels of paratransit service until the coordinated plan goes into effect.

(c) Entities submitting the above certifications and plan elements in lieu of a completed plan on January 26, 1992, must submit a complete plan by July 26, 1992.

(d) Filing of an individual plan does not preclude an entity from cooperating with other entities in the development or implementation of a joint plan. An entity wishing to join with other entities after its initial submission may do so by meeting the filing requirements of this section.

§ 37.143 Paratransit plan implementation.

(a) Each entity shall begin implementation of its complementary paratransit plan, pending notice from FTA. The implementation of the plan shall be consistent with the terms of the plan, including any specified phase-in period.

(b) If the plan contains a request for a wavier based on undue financial burden, the entity shall begin implementation of its plan, pending a determination on its waiver request.

§ 37.145 State comment on plans.

Each state required to receive plans under § 37.135 of this part shall:

(a) Ensure that all applicable section 18 and section 9 recipients have submitted plans.

(b) Certify to FTA that all plans have been received.

(c) Forward the required certification with comments on each plan to FTA. The plans, with comments, shall be submitted to FTA no later than April 1, 1992, for the first year and April 1 annually thereafter.

(d) The State shall develop comments to on each plan, responding to the following points:

(1) Was the plan filed on time?

(2) Does the plan appear reasonable?

(3) Are there circumstances that bear on the ability of the grantee to carry out the plan as represented? If yes, please elaborate.

(4) Is the plan consistent with statewide planning activities?

(5) Are the necessary anticipated financial and capital resources identified in the plan accurately estimated?

§ 37.147 Considerations during FTA review.

In reviewing each plan, at a minimum FTA will consider the following:

(a) Whether the plan was filed on time;

(b) Comments submitted by the state, if applicable;

(c) Whether the plan contains responsive elements for each component required under § 37.139 of this part;

(d) Whether the plan, when viewed in its entirety, provides for paratransit service comparable to the entity's fixed route service;

(e) Whether the entity complied with the public participation efforts required by this part; and

(f) The extent to which efforts were made to coordinate with other public entities with overlapping or contiguous service areas or jurisdictions.

§ 37.149 Disapproved plans.

(a) If a plan is disapproved in whole or in part, FTA will specify which provisions are disapproved. Each entity shall amend its plan consistent with this information and resubmit the plan to the appropriate FTA Regional Office within 90 days of receipt of the disapproval letter.

(b) Each entity revising its plan shall continue to comply with the public participation requirements applicable to the initial development of the plan (set out in § 37.137 of this part).

§ 37.151 Waiver for undue financial burden.

If compliance with the service criteria of § 37.131 of this part creates an undue financial burden, an entity may request a waiver from all or some of the provisions if the entity has complied with the public participation requirements in § 37.137 of this part and if the following conditions apply:

(a) At the time of submission of the initial plan on January 26, 1992—

(1) The entity determines that it cannot meet all of the service criteria by January 26, 1997; or

(2) The entity determines that it cannot make measured progress toward compliance in any year before full compliance is required. For purposes of this part, measured progress means implementing milestones as scheduled, such as incorporating an additional paratransit service criterion or improving an aspect of a specific service criterion.

(b) At the time of its annual plan update submission, if the entity believes that circumstances have changed since its last submission, and it is no longer able to comply by January 26, 1997, or make measured progress in any year before 1997, as described in paragraph (a)(2) of this section.

§ 37.153 FTA waiver determination.

(a) The Administrator will determine whether to grant a waiver for undue financial burden on a case-by-case basis, after considering the factors identified in § 37.155 of this part and the information accompanying the request. If necessary, the Administrator will return the application with a request for additional information.

(b) Any waiver granted will be for a limited and specified period of time.

(c) If the Administrator grants the applicant a waiver, the Administrator will do one of the following:

(1) Require the public entity to provide complementary paratransit to the extent it can do so without incurring an undue financial burden. The entity shall make changes in its plan that the Administrator determines are appropriate to maximize the complementary paratransit service that is provided to ADA paratransit eligible individuals. When making changes to its plan, the entity shall use the public participation process specified for plan development and shall consider first a reduction in number of trips provided to each ADA paratransit eligible person per month, while attempting to meet all other service criteria.

(2) Require the public entity to provide basic complementary paratransit services to all ADA paratransit eligible individuals, even if doing so would cause the public entity to incur an undue financial burden. Basic complementary paratransit service in corridors defined as provided in § 37.131(a) along the public entity's key routes during core service hours.

(i) For purposes of this section, key routes are defined as routes along which there is service at least hourly throughout the day.

(ii) For purposes of this section, core service hours encompass at least peak periods, as these periods are defined locally for fixed route service, consistent with industry practice.

(3) If the Administrator determines that the public entity will incur an undue financial burden as the result of providing basic complementary paratransit service, such that it is infeasible for the entity to provide basic complementary paratransit service, the Administrator shall require the public entity to coordinate with other available providers of demand responsive service in the area served by the public entity to maximize the service to ADA paratransit eligible individuals to the maximum extent feasible.

§ 37.155 Factors in decision to grant an undue financial burden waiver.

(a) In making an undue financial burden determination, the FTA Administrator will consider the following factors:

(1) Effects on current fixed route service, including reallocation of accessible fixed route vehicles and potential reduction in service, measured by service miles;

(2) Average number of trips made by the entity's general population, on a per capita basis, compared with the average number of trips to be made by registered ADA paratransit eligible persons, on a per capita basis;

(3) Reductions in other services, including other special services;

(4) Increases in fares;

(5) Resources available to implement complementary paratransit service over the period covered by the plan;

(6) Percentage of budget needed to implement the plan, both as a percentage of operating budget and a percentage of entire budget;

(7) The current level of accessible service, both fixed route and paratransit;

(8) Cooperation/coordination among area transportation providers;

(9) Evidence of increased efficiencies, that have been or could be effectuated, that would benefit the level and quality of available resources for complementary paratransit service; and

(10) Unique circumstances in the submitting entity's area that affect the ability of the entity to provide paratransit, that militate against the need to provide paratransit, or in some other respect create a circumstance considered exceptional by the submitting entity.

(b)(1) Costs attributable to complementary paratransit shall be limited to costs of providing service specifically required by this part to ADA paratransit eligible individuals, by entities responsible under this part for providing such service.

(2) If the entity determines that it is impracticable to distinguish between trips mandated by the ADA and other trips on a trip-by-trip basis, the entity shall attribute to ADA complementary paratransit requirements a percentage of its overall paratransit costs. This percentage shall be determined by a statistically valid methodology that determines the percentage of trips that are required by this part. The entity shall submit information concerning its methodology and the data on which its percentage is based with its request for a waiver. Only costs attributable to ADA-mandated trips may be considered with respect to a request for an undue financial burden waiver.

(3) Funds to which the entity would be legally entitled, but which, as a matter of state or local funding arrangements, are provided to another entity and used by that entity to provide paratransit service which is part of a coordinated system of paratransit meeting the requirements of this part, may be counted in determining the burden associated with the waiver request.

§§ 37.157–37.159 [Reserved]

Subpart G—Provision of Service

§ 37.161 Maintenance of accessible features: General.

(a) Public and private entities providing transportation services shall maintain in operative condition those features of facilities and vehicles that are required to make the vehicles and facilities readily accessible to and usable by individuals with disabilities. These features include, but are not limited to, lifts and other means of access to vehicles, securement devices, elevators, signage and systems to facilitate communications with persons with impaired vision or hearing.

(b) Accessibility features shall be repaired promptly if they are damaged or out of order. When an accessibility feature is out of order, the entity shall take reasonable steps to accommodate individuals with disabilities who would otherwise use the feature.

(c) This section does not prohibit isolated or temporary interruptions in service or access due to maintenance or repairs.

§ 37.163 Keeping vehicle lifts in operative condition: Public entities.

(a) This section applies only to public entities with respect to lifts in non-rail vehicles.

(b) The entity shall establish a system of regular and frequent maintenance checks of lifts sufficient to determine if they are operative.

(c) The entity shall ensure that vehicle operators report to the entity, by the most immediate means available, any failure of a lift to operate in service.

(d) Except as provided in paragraph (e) of this section, when a lift is discovered to be inoperative, the entity shall take the vehicle out of service before the beginning of the vehicle's next service day and ensure that the lift is repaired before the vehicle returns to service.

(e) If there is no spare vehicle available to take the place of a vehicle with an inoperable lift, such that taking the vehicle out of service will reduce the transportation service the entity is able to provide, the public entity may keep the vehicle in service with an inoperable lift for no more than five days (if the entity serves an area of 50,000 or less population) or three days (if the entity serves an area of over 50,000 population) from the day on which the lift is discovered to be inoperative.

(f) In any case in which a vehicle is operating on a fixed route with an inoperative lift, and the headway to the next accessible vehicle on the route exceeds 30 minutes, the entity shall promptly provide alternative transportation to individuals with disabilities who are unable to use the vehicle because its lift does not work.

§ 37.165 Lift and securement use.

(a) This section applies to public and private entities.

(b) All common wheelchairs and their users shall be transported in the entity's vehicles or other conveyances. The entity is not required to permit wheelchairs to ride in places other than designated securement locations in the vehicle, where such locations exist.

(c)(1) For vehicles complying with part 38 of this title, the entity shall use the securement system to secure wheelchairs as provided in that Part.

(2) For other vehicles transporting individuals who use wheelchairs, the entity shall provide and use a securement system to ensure that the wheelchair remains within the securement area.

(3) The entity may require that an individual permit his or her wheelchair to be secured.

(d) The entity may not deny transportation to a wheelchair or its user on the ground that the device cannot be secured or restrained satisfactorily by the vehicle's securement system.

(e) The entity may recommend to a user of a wheelchair that the individual transfer to a vehicle seat. The entity may not require the individual to transfer.

(f) Where necessary or upon request, the entity's personnel shall assist individuals with disabilities with the use of securement systems, ramps and lifts. If it is necessary for the personnel to leave their seats to provide this assistance, they shall do so.

(g) The entity shall permit individuals with disabilities who do not use wheelchairs, including standees, to use a vehicle's lift or ramp to enter the vehicle. *Provided,* that an entity is not required to permit such individuals to use a lift Model 141 manufactured by EEC, Inc. If the entity chooses not to allow such individuals to use such a lift, it shall clearly notify consumers of this fact by signage on the exterior of the vehicle (adjacent to and of equivalent size with the accessibility symbol).

[56 FR 45621, Sept. 6, 1991, as amended at 58 FR 63103, Nov. 30, 1993]

§ 37.167 Other service requirements.

(a) This section applies to public and private entities.

(b) On fixed route systems, the entity shall announce stops as follows:

(1) The entity shall announce at least at transfer points with other fixed routes, other major intersections and destination points, and intervals along a route sufficient to permit individuals with visual impairments or other disabilities to be oriented to their location.

(2) The entity shall announce any stop on request of an individual with a disability.

(c) Where vehicles or other conveyances for more than one route serve the same stop, the entity shall provide a means by which an individual with a visual impairment or other disability can identify the proper vehicle to enter or be identified to the vehicle operator as a person seeking a ride on a particular route.

(d) The entity shall permit service animals to accompany individuals with disabilities in vehicles and facilities.

(e) The entity shall ensure that vehicle operators and other personnel make use of accessibility-related equipment or features required by part 38 of this title.

(f) The entity shall make available to individuals with disabilities adequate information concerning transportation services. This obligation includes making adequate communications capacity available, through accessible formats and technology, to enable users to obtain information and schedule service.

(g) The entity shall not refuse to permit a passenger who uses a lift to disembark from a vehicle at any designated stop, unless the lift cannot be deployed, the lift will be damaged if it is deployed, or temporary conditions at the stop, not under the control of the entity, preclude the safe use of the stop by all passengers.

(h) The entity shall not prohibit an individual with a disability from traveling with a respirator or portable oxygen supply, consistent with applicable Department of Transportation rules on the transportation of hazardous materials (49 CFR subtitle B, chapter 1, subchapter C).

(i) The entity shall ensure that adequate time is provided to allow individuals with disabilities to complete boarding or disembarking from the vehicle.

(j)(1) When an individual with a disability enters a vehicle, and because of a disability, the individual needs to sit in a seat or occupy a wheelchair securement location, the entity shall ask the following persons to move in order to allow the individual with a disability to occupy the seat or securement location:

(i) Individuals, except other individuals with a disability or elderly persons, sitting in a location designated as priority seating for elderly and handicapped persons (or other seat as necessary);

(ii) Individuals sitting in or a fold-down or other movable seat in a wheelchair securement location.

(2) This requirement applies to light rail, rapid rail, and commuter rail systems only to the extent practicable.

(3) The entity is not required to enforce the request that other passengers move from priority seating areas or wheelchair securement locations.

(4) In all signage designating priority seating areas for elderly persons and persons with disabilities, or designating wheelchair securement areas, the entity shall include language informing persons sitting in these locations that they should comply with requests by transit provider personnel to vacate their seats to make room for an individual with a disability. This requirement applies to all fixed route vehicles when they are acquired by the entity or to new or replacement signage in the entity's existing fixed route vehicles.

[56 FR 45621, Sept. 6, 1991, as amended at 58 FR 63103, Nov. 30, 1993]

§ 37.169 Interim requirements for over-the-road bus service operated by private entities.

(a) Private entities operating over-the-road buses, in addition to compliance with other applicable provisions of this part, shall provide accessible service as provided in this section.

(b) The private entity shall provide assistance, as needed, to individuals

with disabilities in boarding and disembarking, including moving to and from the bus seat for the purpose of boarding and disembarking. The private entity shall ensure that personnel are trained to provide this assistance safely and appropriately.

(c) To the extent that they can be accommodated in the areas of the passenger compartment provided for passengers' personal effects, wheelchairs or other mobility aids and assistive devices used by individuals with disabilities, or components of such devices, shall be permitted in the passenger compartment. When the bus is at rest at a stop, the driver or other personnel shall assist individuals with disabilities with the stowage and retrieval of mobility aids, assistive devices, or other items that can be accommodated in the passenger compartment of the bus.

(d) Wheelchairs and other mobility aids or assistive devices that cannot be accommodated in the passenger compartment (including electric wheelchairs) shall be accommodated in the baggage compartment of the bus, unless the size of the baggage compartment prevents such accommodation.

(e) At any given stop, individuals with disabilities shall have the opportunity to have their wheelchairs or other mobility aids or assistive devices stowed in the baggage compartment before other baggage or cargo is loaded, but baggage or cargo already on the bus does not have to be off-loaded in order to make room for such devices.

(f) The entity may require up to 48 hours' advance notice only for providing boarding assistance. If the individual does not provide such notice, the entity shall nonetheless provide the service if it can do so by making a reasonable effort, without delaying the bus service.

§ 37.171 Equivalency requirement for demand responsive service operated by private entities not primarily engaged in the business of transporting people.

A private entity not primarily engaged in the business of transporting people which operates a demand responsive system shall ensure that its system, when viewed in its entirety, provides equivalent service to individuals with disabilities, including individuals who use wheelchairs, as it does to individuals without disabilities. The standards of § 37.105 shall be used to determine if the entity is providing equivalent service.

§ 37.173 Training requirements.

Each public or private entity which operates a fixed route or demand responsive system shall ensure that personnel are trained to proficiency, as appropriate to their duties, so that they operate vehicles and equipment safely and properly assist and treat individuals with disabilities who use the service in a respectful and courteous way, with appropriate attention to the difference among individuals with disabilities.

Subpart H—Over-the-Road Buses (OTRBs)

SOURCE: 63 FR 51690, Sept. 28, 1998, unless otherwise noted.

§ 37.181 Applicability dates.

This subpart applies to all private entities that operate OTRBs. The requirements of the subpart begin to apply to large operators beginning October 30, 2000 and to small operators beginning October 29, 2001.

§ 37.183 Purchase or lease of new OTRBs by operators of fixed-route systems.

The following requirements apply to private entities that are primarily in the business of transporting people, whose operations affect commerce, and that operate a fixed-route system, with respect to OTRBs delivered to them on or after the date on which this subpart applies to them:

(a) *Large operators.* If a large entity operates a fixed-route system, and purchases or leases a new OTRB for or in contemplation of use in that system, it shall ensure that the vehicle is readily accessible to and usable by individuals with disabilities, including individuals who use wheelchairs.

(b) *Small operators.* If a small entity operates a fixed-route system, and purchases or leases a new OTRB for or in contemplation of use in that system, it

must do one of the following two things:

(1) Ensure that the vehicle is readily accessible to and usable by individuals with disabilities, including individuals who use wheelchairs; or

(2) Ensure that equivalent service, as defined in § 37.105, is provided to individuals with disabilities, including individuals who use wheelchairs. To meet this equivalent service standard, the service provided by the operator must permit a wheelchair user to travel in his or her own mobility aid.

§ 37.185 Fleet accessibility requirement for OTRB fixed-route systems of large operators.

Each large operator subject to the requirements of § 37.183 shall ensure that—

(a) By October 30, 2006 no less than 50 percent of the buses in its fleet with which it provides fixed-route service are readily accessible to and usable by individuals with disabilities, including individuals who use wheelchairs.

(b) By October 29, 2012, 100 percent of the buses in its fleet with which it provides fixed-route service are readily accessible to and usable by individuals with disabilities, including individuals who use wheelchairs.

(c) *Request for time extension.* An operator may apply to the Secretary for a time extension of the fleet accessibility deadlines of this section. If he or she grants the request, the Secretary sets a specific date by which the operator must meet the fleet accessibility requirement. In determining whether to grant such a request, the Secretary considers the following factors:

(1) Whether the operator has purchased or leased, since October 30, 2000, enough new OTRBs to replace 50 percent of the OTRBs with which it provides fixed-route service by October 30, 2006 or 100 percent of such OTRBs by October 29, 2012;

(2) Whether the operator has purchased or leased, between October 28, 1998 and October 30, 2000, a number of new inaccessible OTRBs significantly exceeding the number of buses it would normally obtain in such a period;

(3) The compliance with all requirements of this part by the operator over the period between October 28, 1998 and the request for time extension.

§ 37.187 Interline service.

(a) When the general public can purchase a ticket or make a reservation with one operator for a fixed-route trip of two or more stages in which another operator provides service, the first operator must arrange for an accessible bus, or equivalent service, as applicable, to be provided for each stage of the trip to a passenger with a disability. The following examples illustrate the provisions of this paragraph (a):

Example 1. By going to Operator X's ticket office or calling X for a reservation, a passenger can buy or reserve a ticket from Point A through to Point C, transferring at intermediate Point B to a bus operated by Operator Y. Operator X is responsible for communicating immediately with Operator Y to ensure that Y knows that a passenger needing accessible transportation or equivalent service, as applicable, is traveling from Point B to Point C. By immediate communication, we mean that the ticket or reservation agent for Operator X, by phone, fax, computer, or other instantaneous means, contacts Operator Y the minute the reservation or ticketing transaction with the passenger, as applicable, has been completed. It is the responsibility of each carrier to know how to contact carriers with which it interlines (e.g., Operator X must know Operator Y's phone number).

Example 2. Operator X fails to provide the required information in a timely manner to Operator Y. Operator X is responsible for compensating the passenger for the consequent unavailability of an accessible bus or equivalent service, as applicable, on the B–C leg of the interline trip.

(b) Each operator retains the responsibility for providing the transportation required by this subpart to the passenger for its portion of an interline trip. The following examples illustrate the provisions of this paragraph (b):

Example 1. In Example 1 to paragraph (a) of this section, Operator X provides the required information to Operator Y in a timely fashion. However, Operator Y fails to provide an accessible bus or equivalent service to the passenger at Point B as the rules require. Operator Y is responsible for compensating the passenger as provided in § 37. 199.

Example 2. Operator X provides the required information to Operator Y in a timely fashion. However, the rules require Operator Y to provide an accessible bus on 48 hours' advance notice (i.e., as a matter of interim

service under § 37.193(a) or service by a small mixed-service operator under § 37.191), and the passenger has purchased the ticket or made the reservation for the interline trip only 8 hours before Operator Y's bus leaves from Point B to go to Point C. In this situation, Operator Y is not responsible for providing an accessible bus to the passenger at Point B, any more than that it would be had the passenger directly contacted Operator Y to travel from Point B to Point C.

(c) All fixed-route operators involved in interline service shall ensure that they have the capacity to receive communications at all times concerning interline service for passengers with disabilities. The following examples illustrate the provisions of this paragraph (c):

Example 1. Operator Y's office is staffed only during normal weekday business hours. Operator Y must have a means of receiving communications from carriers with which it interlines (e.g., telephone answering machine, fax, computer) when no one is in the office.

Example 2. Operator Y has the responsibility to monitor its communications devices at reasonable intervals to ensure that it can act promptly on the basis of messages received. If Operator Y receives a message from Operator X on its answering machine on Friday night, notifying Y of the need for an accessible bus on Monday morning, it has the responsibility of making sure that the accessible bus is there on Monday morning. Operator Y is not excused from its obligation because no one checked the answering machine over the weekend.

§ 37.189 Service requirement for OTRB demand-responsive systems.

(a) This section applies to private entities primarily in the business of transporting people, whose operations affect commerce, and that provide demand-responsive OTRB service. Except as needed to meet the other requirements of this section, these entities are not required to purchase or lease accessible buses in connection with providing demand-responsive service.

(b) Demand-responsive operators shall ensure that, beginning one year from the date on which the requirements of this subpart begin to apply to the entity, any individual with a disability who requests service in an accessible OTRB receives such service. This requirement applies to both large and small operators.

(c) The operator may require up to 48 hours' advance notice to provide this service.

(d) If the individual with a disability does not provide the advance notice the operator requires under paragraph (a) of this section, the operator shall nevertheless provide the service if it can do so by making a reasonable effort.

(e) To meet this requirement, an operator is not required to fundamentally alter its normal reservation policies or to displace another passenger who has reserved a seat on the bus. The following examples illustrate the provisions of this paragraph (e):

Example 1. A tour bus operator requires all passengers to reserve space on the bus three months before the trip date. This requirement applies to passengers with disabilities on the same basis as other passengers. Consequently, an individual passenger who is a wheelchair user would have to request an accessible bus at the time he or she made his reservation, at least three months before the trip date. If the individual passenger with a disability makes a request for space on the trip and an accessible OTRB 48 hours before the trip date, the operator could refuse the request because all passengers were required to make reservations three months before the trip date.

Example 2. A group makes a reservation to charter a bus for a trip four weeks in advance. A week before the trip date, the group discovers that someone who signed up for the trip is a wheelchair user who needs an accessible bus, or someone who later buys a seat in the block of seats the group has reserved needs an accessible bus. A group representative or the passenger with a disability informs the bus company of this need more than 48 hours before the trip date. The bus company must provide an accessible bus.

Example 3. While the operator's normal deadline for reserving space on a charter or tour trip has passed, a number of seats for a trip are unfilled. The operator permits members of the public to make late reservations for the unfilled seats. If a passenger with a disability calls 48 hours before the trip is scheduled to leave and requests a seat and the provision of an accessible OTRB, the operator must meet this request, as long as it does not displace another passenger with a reservation.

Example 4. A tour bus trip is nearly sold out three weeks in advance of the trip date. A passenger with a disability calls 48 hours before the trip is scheduled to leave and requests a seat and the provision of an accessible OTRB. The operator need not meet this request if it will have the effect of displacing a passenger with an existing reservation. If

other passengers would not be displaced, the operator must meet this request.

§ 37.191 Special provision for small mixed-service operators.

(a) For purposes of this section, a small mixed-service operator is a small operator that provides both fixed-route and demand-responsive service and does not use more than 25 percent of its buses for fixed-route service.

(b) An operator meeting the criteria of paragraph (a) of this section may conduct all its trips, including fixed-route trips, on an advance-reservation basis as provided for demand-responsive trips in § 37.189. Such an operator is not required to comply with the accessible bus acquisition/equivalent service obligations of § 37.183(b).

§ 37.193 Interim service requirements.

(a) Until 100 percent of the fleet of a large or small operator uses to provide fixed-route service is composed of accessible OTRBs, the operator shall meet the following interim service requirements:

(1) Beginning one year from the date on which the requirements of this subpart begin to apply to the operator, it shall ensure that any individual with a disability that requests service in an accessible OTRB receives such service.

(i) The operator may require up to 48 hours' advance notice to provide this service.

(ii) If the individual with a disability does not provide the advance notice the operator requires, the operator shall nevertheless provide the service if it can do so by making a reasonable effort.

(iii) If the trip on which the person with a disability wishes to travel is already provided by an accessible bus, the operator has met this requirement.

(2) Before a date one year from the date on which this subpart applies to the operator, an operator which is unable to provide the service specified in paragraph (a) of this section shall comply with the requirements of § 37.169.

(3) Interim service under this paragraph (a) is not required to be provided by a small operator who is providing equivalent service to its fixed-route service as provided in § 37.183(b)(2).

(b) Some small fixed-route operators may never have a fleet 100 percent of which consists of accessible buses (e.g., a small fixed-route operator who exclusively or primarily purchases or leases used buses). Such an operator must continue to comply with the requirements of this section with respect to any service that is not provided entirely with accessible buses.

(c) Before a date one year from the date on which this subpart applies to an operator providing demand-responsive service, an operator which is unable to provide the service described in § 37.189 shall comply with the requirements of § 37.169.

§ 37.195 Purchase or lease of OTRBs by private entities not primarily in the business of transporting people.

This section applies to all purchases or leases of new vehicles by private entities which are not primarily engaged in the business of transporting people, with respect to buses delivered to them on or after the date on which this subpart begins to apply to them.

(a) *Fixed-route systems.* If the entity operates a fixed-route system and purchases or leases an OTRB for or in contemplation of use on the system, it shall meet the requirements of § 37.183 (a) or (b), as applicable.

(b) *Demand-responsive systems.* The requirements of § 37.189 apply to demand-responsive systems operated by private entities not primarily in the business of transporting people. If such an entity operates a demand-responsive system, and purchases or leases an OTRB for or in contemplation of use on the system, it is not required to purchase or lease an accessible bus except as needed to meet the requirements of § 37.189.

§ 37.197 Remanufactured OTRBs.

(a) This section applies to any private entity operating OTRBs that takes one of the following actions:

(1) On or after the date on which this subpart applies to the entity, it remanufactures an OTRB so as to extend its useful life for five years or more or makes a solicitation for such remanufacturing; or

(2) Purchases or leases an OTRB which has been remanufactured so as

to extend its useful life for five years or more, where the purchase or lease occurs after the date on which this subpart applies to the entity and during the period in which the useful life of the vehicle is extended.

(b) In any situation in which this subpart requires an entity purchasing or leasing a new OTRB to purchase or lease an accessible OTRB, OTRBs acquired through the actions listed in paragraph (a) of this section shall, to the maximum extent feasible, be readily accessible to and usable by individuals with disabilities, including individuals who use wheelchairs.

(c) For purposes of this section, it shall be considered feasible to remanufacture an OTRB so as to be readily accessible to and usable by individuals with disabilities, including individuals who use wheelchairs, unless an engineering analysis demonstrates that including accessibility features required by this part would have a significant adverse effect on the structural integrity of the vehicle.

§ 37.199 Compensation for failure to provide required vehicles or service.

(a) Operators shall pay compensation to passengers with disabilities as provided in this section in the following situations:

(1) If a demand-responsive operator under § 37.189 or a small mixed-service operator under § 37.191 fails to provide in a timely manner an accessible OTRB to a passenger with a disability who has made a timely request for such a bus;

(2) If a fixed-route operator providing interim service under § 37.193(a)(1) fails to provide in a timely manner an accessible OTRB to a passenger with a disability who has made a timely request for such a bus;

(3) If a small fixed-route operator who chooses to provide equivalent service under § 37.183(b)(2) fails to provide equivalent service to a passenger;

(4) If required service is not provided to a passenger with a disability because accessibility equipment does not function or operator personnel do not perform essential tasks;

(5) If, for a trip involving an interline connection (see § 37.187), the operator with whom the passenger purchases the ticket or makes a reservation for the trip fails to communicate immediately with other operators providing a portion of the trip to inform them of the need for an accessible bus or equivalent service, as applicable, with the result that other operators do not provide the service required by this subpart; or

(6) If an operator required to provide interim service under § 37.169, after the date on which this subpart begins to apply to the operator, fails to provide this service.

(b) When one of the events in paragraph (a) of this section calling for compensation occurs, the operator shall pay compensation regardless of the reason for the failure to provide the required service. The only exception to this requirement is a situation in which, for reasons beyond the control of the operator, no transportation is provided to any passenger.

(c) The amount of the compensation shall be the following:

(1) On the first occasion on which the operator fails to provide the required service as provided in paragraph (a) of this section to any passenger, $300;

(2) On the second such occasion, $400;

(3) On the third such occasion, $500;

(4) On the fourth such occasion, $600;

(5) On the fifth and subsequent such occasions, $700.

(d) The operator shall provide this compensation to the passenger within seven working days of the date on which the operator failed to provide the accessible OTRB or provide equivalent service, as applicable.

(e) Payment of compensation under this section is not a defense to legal action brought against the operator to enforce the Americans with Disabilities Act or this part.

§ 37.201 Intermediate and rest stops.

(a) Whenever an OTRB makes an intermediate or rest stop, a passenger with a disability, including an individual using a wheelchair, shall be permitted to leave and return to the bus on the same basis as other passengers. The operator shall ensure that assistance is provided to passengers with disabilities as needed to enable the passenger to get on and off the bus at the stop (e.g., operate the lift and provide

assistance with securement; provide other boarding assistance if needed, as in the case of a wheelchair user who has transferred to a vehicle seat because other wheelchair users occupied all securement locations).

(b) If an OTRB operator owns, leases, or controls the facility at which a rest or intermediate stop is made, or if an OTRB operator contracts with the person who owns, leases, or controls such a facility to provide rest stop services, the OTRB operator shall ensure the facility complies fully with applicable requirements of the Americans with Disabilities Act.

(c) If an OTRB equipped with an inaccessible restroom is making an express run of three hours or more without a rest stop, and a passenger with a disability who is unable to use the inaccessible restroom requests an unscheduled rest stop, the operator shall make a good faith effort to accommodate the request. The operator is not required to make the stop. However, if the operator does not make the stop, the operator shall explain to the passenger making the request the reason for its decision not to do so.

§ 37.203 Lift maintenance.

(a) The entity shall establish a system of regular and frequent maintenance checks of lifts sufficient to determine if they are operative.

(b) The entity shall ensure that vehicle operators report to the entity, by the most immediate means available, any failure of a lift to operate in service.

(c) Except as provided in paragraph (d) of this section, when a lift is discovered to be inoperative, the entity shall take the vehicle out of service before the beginning of the vehicle's next trip and ensure that the lift is repaired before the vehicle returns to service.

(d) If there is no other vehicle available to take the place of an OTRB with an inoperable lift, such that taking the vehicle out of service before its next trip will reduce the transportation service the entity is able to provide, the entity may keep the vehicle in service with an inoperable lift for no more than five days from the day on which the lift is discovered to be inoperative.

§ 37.205 Additional passengers who use wheelchairs.

If a number of wheelchair users exceeding the number of securement locations on the bus seek to travel on a trip, the operator shall assign the securement locations on a first come-first served basis. The operator shall offer boarding assistance and the opportunity to sit in a vehicle seat to passengers who are not assigned a securement location. If the passengers who are not assigned securement locations are unable or unwilling to accept this offer, the operator is not required to provide transportation to them on the bus.

§ 37.207 Discriminatory practices.

It shall be considered discrimination for any operator to—

(a) Deny transportation to passengers with disabilities, except as provided in § 37.5(h);

(b) Use or request the use of persons other than the operator's employees (e.g., family members or traveling companions of a passenger with a disability, medical or public safety personnel) for routine boarding or other assistance to passengers with disabilities, unless the passenger requests or consents to assistance from such persons;

(c) Require or request a passenger with a disability to reschedule his or her trip, or travel at a time other than the time the passenger has requested, in order to receive transportation as required by this subpart;

(d) Fail to provide reservation services to passengers with disabilities equivalent to those provided other passengers; or

(e) Fail or refuse to comply with any applicable provision of this part.

§ 37.209 Training and other requirements.

OTRB operators shall comply with the requirements of §§ 37.161, 37.165–37.167, and 37.173. For purposes of § 37.173, ''training to proficiency'' is deemed to include, as appropriate to the duties of particular employees, training in proper operation and maintenance of accessibility features and equipment, boarding assistance, securement of mobility aids, sensitive

and appropriate interaction with passengers with disabilities, handling and storage of mobility devices, and familiarity with the requirements of this subpart. OTRB operators shall provide refresher training to personnel as needed to maintain proficiency.

§ 37.211 Effect of NHTSA and FHWA safety rules.

OTRB operators are not required to take any action under this subpart that would violate an applicable National Highway Traffic Safety Administration or Federal Highway Administration safety rule.

§ 37.213 Information collection requirements.

(a) This paragraph (a) applies to demand-responsive operators under § 37.189 and fixed-route operators under § 37.193(a)(1) that are required to, and small mixed-service operators under § 37.191 that choose to, provide accessible OTRB service on 48 hours' advance notice.

(1) When the operator receives a request for accessible bus service, the operator shall complete lines 1–8 of the Form A in Appendix A to this subpart. The operator shall immediately provide a copy of the form to the passenger.

(2) On the scheduled date of the trip, the operator shall complete lines 9–11 of the form. In any case in which the requested accessible bus was not provided, the operator shall immediately provide a copy of the form to the passenger.

(3) The operator shall retain its copy of the completed form for five years. The operator shall make these forms available to Department of Transportation or Department of Justice officials at their request.

(4) Beginning October 29, 2001 for large operators, and October 28, 2002 for small operators, and on that date in each year thereafter, each operator shall submit a summary of its forms to the Department of Transportation. The summary shall state the number of requests for accessible bus service, the number of times these requests were met, and the number of times compensation was paid. It shall also include the name, address, telephone number, and contact person name for the operator.

(b) This paragraph (b) applies to small fixed-route operators who choose to provide equivalent service to passengers with disabilities under § 37.183(b)(2).

(1) The operator shall complete Form B in Appendix A to this subpart on every occasion on which a passenger with a disability needs equivalent service in order to be provided transportation.

(2) The operator shall provide one copy of the form to the passenger and retain another copy of the completed form for five years. The operator shall make these forms available to Department of Transportation or Department of Justice officials at their request.

(3) Beginning October 28, 2002, and on that date in each year thereafter, each operator shall submit a summary of its forms to the Department of Transportation. The summary shall state the number of situations in which equivalent service was needed, the number of times such service was provided, and the number of times compensation was paid. It shall also include the name, address, telephone number, and contact person name for the operator.

(c) Beginning October 30, 2000 for large operators, and October 29, 2001 for small operators, and on that date in each year thereafter, each fixed-route operator shall submit to the Department a report on how many passengers with disabilities used the lift to board accessible buses. For fixed-route operators, the report shall reflect separately the data pertaining to 48-hour advance reservation service and other service.

(d) Each operator shall submit to the Department, October 28, 1999 and each year thereafter on that date, a summary report listing the number of new buses and used buses it has purchased or leased during the preceding year, and how many of the buses in each category are accessible. It shall also include the total number of buses in the operator's fleet and the name, address, telephone number, and contact person name for the operator.

(e) The information required to be submitted to the Department shall be sent to the following address: Bureau

of Transportation Statistics, 400 7th Street, SW., Washington, DC 20590.

§ 37.215 Review of requirements.

(a) Beginning October 28, 2005, the Department will review the requirements of § 37.189 and their implementation. The Department will complete this review by October 30, 2006.

(1) As part of this review, the Department will consider factors including, but not necessarily limited to, the following:

(i) The percentage of accessible buses in the demand-responsive fleets of large and small demand-responsive operators.

(ii) The success of small and large demand-responsive operators' service at meeting the requests of passengers with disabilities for accessible buses in a timely manner.

(iii) The ridership of small and large operators' demand-responsive service by passengers with disabilities.

(iv) The volume of complaints by passengers with disabilities.

(v) Cost and service impacts of implementation of the requirements of § 37.189.

(2) The Department will make one of the following decisions on the basis of the review:

(i) Retain § 37.189 without change; or

(ii) Modify the requirements of § 37.189 for large and/or small demand-responsive operators.

(b) Beginning October 30, 2006, the Department will review the requirements of §§ 37.183, 37.185, 37.187, 37.191 and 37.193(a) and their implementation. The Department will complete this review by October 29, 2007.

(1) As part of this review, the Department will consider factors including, but not necessarily limited to, the following:

(i) The percentage of accessible buses in the fixed-route fleets of large and small fixed-route operators.

(ii) The success of small and large fixed-route operators' interim or equivalent service at meeting the requests of passengers with disabilities for accessible buses in a timely manner.

(iii) The ridership of small and large operators' fixed-route service by passengers with disabilities.

(iv) The volume of complaints by passengers with disabilities.

(v) Cost and service impacts of implementation of the requirements of these sections.

(2) The Department will make one of the following decisions on the basis of the review:

(i) Retain §§ 37.183, 37.185, 37.187, 37.191, 37.193(a) without change; or

(ii) Modify the requirements of §§ 37.183, 37.185, 37.187, 37.191, 37.193(a) for large and/or small fixed-route operators.

APPENDIX A TO SUBPART H OF PART 37—FORMS FOR ADVANCE NOTICE REQUESTS AND PROVISION OF EQUIVALENT SERVICE

Form A—For Use by Providers of Advance Notice Service

1. Operator's name
2. Address

3. Phone number:
4. Passenger's name:
5. Address:

6. Phone number:
7. Scheduled date and time of trip:
8. Date and time of request:
9. Was accessible bus provided for trip? Yes no
10. Was there a basis recognized by U.S. Department of transportation regulations for not providing an accessible bus for the trip? Yes no

If yes, explain

11. If the answers to items 9 and 10 were both no, attach documentation that compensation required by department of transportation regulations was paid.

Form B—For Use by Providers of Equivalent Service

1. Operator's name
2. Address

3. Phone number:
4. Passenger's name:
5. Address:

6. Phone number:
7. Date and time of trip:
8. Location of need for equivalent service:

9. Was equivalent service provided for trip? Yes no
10. If the answer to items 9 and 10 is no, attach documentation that compensation required by Department of Transportation regulations was paid.

Appendix A to Part 37—Standards for Accessible Transportation Facilities

ADA ACCESSIBILITY GUIDELINES FOR BUILDINGS AND FACILITIES TABLE OF CONTENTS

1. PURPOSE **1**

2. GENERAL **1**

2.1 Provisions for Adults 1
2.2 Equivalent Facilitation 1

3. MISCELLANEOUS INSTRUCTIONS AND DEFINITIONS **1**

3.1 Graphic Conventions 1
3.2 Dimensional Tolerances 2
3.3 Notes 2
3.4 General Terminology 2
3.5 Definitions 2

4. ACCESSIBLE ELEMENTS AND SPACES: SCOPE AND TECHNICAL REQUIREMENTS **5**

4.1 Minimum Requirements 5

4.1.1. Application 5
4.1.2. Accessible Sites and Exterior Facilities: New Construction 5
4.1.3. Accessible Buildings: New Construction 7
4.1.4. (Reserved) 10
4.1.5. Accessible Buildings: Additions 10
4.1.6. Accessible Buildings: Alterations 11
4.1.7. Accessible Buildings: Historic Preservation 13

4.2 Space Allowance and Reach Ranges 14
4.3 Accessible Route 15
4.4 Protruding Objects 21
4.5 Ground and Floor Surfaces 22
4.6 Parking and Passenger Loading Zones 24
4.7 Curb Ramps 26
4.8 Ramps 27
4.9 Stairs 30
4.10 Elevators 30

4.11 Platform Lifts (Wheelchair Lifts) 36
4.12 Windows 36
4.13 Doors 36
4.14 Entrances 40
4.15 Drinking Fountains and Water Coolers 40
4.16 Water Closets 40
4.17 Toilet Stalls 41
4.18 Urinals 44
4.19 Lavatories and Mirrors 44
4.20 Bathtubs 45
4.21 Shower Stalls 45
4.22 Toilet Rooms 45
4.23 Bathrooms, Bathing Facilities, and Shower Rooms 48
4.24 Sinks 49
4.25 Storage 49
4.26 Handrails, Grab Bars, and Tub and Shower Seats 50
4.27 Controls and Operating Mechanisms 51
4.28 Alarms 52
4.29 Detectable Warnings 53
4.30 Signage 53
4.31 Telephones 54
4.32 Fixed or Built-in Seating and Tables 56
4.33 Assembly Areas 56
4.34 Automated Teller Machines 58
4.35 Dressing and Fitting Rooms 58

5. RESTAURANTS AND CAFETERIAS. 59

6. MEDICAL CARE FACILITIES 60

7. BUSINESS AND MERCANTILE 61

8. LIBRARIES 62

9. ACCESSIBLE TRANSIENT LODGING 63

10. TRANSPORTATION FACILITIES 67

APPENDIX A1

1. PURPOSE.

This document sets guidelines for accessibility to buildings and facilities by individuals with disabilities under the Americans with Disabilities Act (ADA) of 1990. These guidelines are to be applied during the design, construction, and alteration of buildings and facilities covered by Titles II and III of the ADA to the extent required by regulations issued by Federal agencies, including the Department of Justice and the Department of Transportation, under the ADA.

The technical specifications 4.2 through 4.35, of these guidelines are the same as those of the American National Standard Institute's document A117.1-1980, except as noted in this text by italics. However, sections 4.1.1 through 4.1.7 and sections 5 through 10 are different from ANSI A117.1 in their entirety and are printed in standard type.

The illustrations and text of ANSI A117.1 are reproduced with permission from the American National Standards Institute. Copies of the standard may be purchased from the American National Standards Institute at 1430 Broadway, New York, New York 10018.

2. GENERAL.

2.1 Provisions for Adults. *The specifications in these guidelines are based upon adult dimensions and anthropometrics.*

2.2* Equivalent Facilitation. *Departures from particular technical and scoping requirements of this guideline by the use of other designs and technologies are permitted where the alternative designs and technologies used will provide substantially equivalent or greater access to and usability of the facility.*

3. MISCELLANEOUS INSTRUCTIONS AND DEFINITIONS.

3.1 Graphic Conventions. Graphic conventions are shown in Table 1. Dimensions that are not marked minimum or maximum are absolute, unless otherwise indicated in the text or captions.

Table 1
Graphic Conventions

Convention	Description
36 / 915	Typical dimension line showing U.S. customary units (in inches) above the line and SI units (in millimeters) below
9 / 230	Dimensions for short distances indicated on extended line
9 / 230 36 / 915	Dimension line showing alternate dimensions required
	Direction of approach
max	Maximum
min	Minimum
.....	Boundary of clear floor area
℄	Centerline

1

3.4 General Terminology

3.2 Dimensional Tolerances. All dimensions are subject to conventional building industry tolerances for field conditions.

3.3 Notes. The text of *these guidelines* does not contain notes or footnotes. Additional information, explanations, and advisory materials are located in the Appendix. Paragraphs marked with an asterisk have related, non-mandatory material in the Appendix. In the Appendix, the corresponding paragraph numbers are preceded by an A.

3.4 General Terminology.

comply with. Meet one or more specifications of *these guidelines*.

if, if ... then. Denotes a specification that applies only when the conditions described are present.

may. Denotes an option or alternative.

shall. Denotes a mandatory specification or requirement.

should. Denotes an advisory specification or recommendation.

3.5 Definitions.

Access Aisle. An accessible pedestrian space between elements, such as parking spaces, seating, and desks, that provides clearances appropriate for use of the elements.

Accessible. Describes a site, building, facility, or portion thereof that complies with *these guidelines*.

Accessible Element. An *element* specified by *these guidelines* (for example, telephone, controls, and the like).

Accessible Route. A continuous unobstructed path connecting all accessible elements and spaces of a building or facility. Interior accessible routes may include corridors, floors, ramps, elevators, lifts, and clear floor space at fixtures. Exterior accessible routes may include parking access aisles, curb ramps, *crosswalks at vehicular ways*, walks, ramps, and lifts.

Accessible Space. *Space that complies with these guidelines.*

Adaptability. The ability of certain building spaces and elements, such as kitchen counters, sinks, and grab bars, to be added or altered so as to accommodate the needs of *individuals with or without disabilities* or to accommodate the needs of persons with different types or degrees of disability.

Addition. *An expansion, extension, or increase in the gross floor area of a building or facility.*

Administrative Authority. A governmental agency that adopts or enforces regulations and *guidelines* for the design, construction, or *alteration* of buildings and facilities.

Alteration. *An alteration is a change to a building or facility made by, on behalf of, or for the use of a public accommodation or commercial facility, that affects or could affect the usability of the building or facility or part thereof. Alterations include, but are not limited to, remodeling, renovation, rehabilitation, reconstruction, historic restoration, changes or rearrangement of the structural parts or elements, and changes or rearrangement in the plan configuration of walls and full-height partitions. Normal maintenance, reroofing, painting or wallpapering, or changes to mechanical and electrical systems are not alterations unless they affect the usability of the building or facility.*

Area of Rescue Assistance. *An area, which has direct access to an exit, where people who are unable to use stairs may remain temporarily in safety to await further instructions or assistance during emergency evacuation.*

Assembly Area. A room or space accommodating a *group of* individuals for recreational, educational, political, social, or amusement purposes, or for the consumption of food and drink.

Automatic Door. A door equipped with a power-operated mechanism and controls that open and close the door automatically upon receipt of a momentary actuating signal. The switch that begins the automatic cycle may be a photoelectric device, floor mat, or manual switch (see power-assisted door).

3.5 Definitions

Building. Any structure used and intended for supporting or sheltering any use or occupancy.

Circulation Path. An exterior or interior way of passage from one place to another for pedestrians, including, but not limited to, walks, hallways, courtyards, stairways, and stair landings.

Clear. Unobstructed.

Clear Floor Space. *The minimum unobstructed floor or ground space required to accommodate a single, stationary wheelchair and occupant.*

Closed Circuit Telephone. *A telephone with dedicated line(s) such as a house phone, courtesy phone or phone that must be used to gain entrance to a facility.*

Common Use. Refers to those interior and exterior rooms, spaces, or elements that are made available for the use of a restricted group of people (for example, *occupants of a homeless shelter*, the occupants of an office building, or the guests of such occupants).

Cross Slope. The slope that is perpendicular to the direction of travel (see running slope).

Curb Ramp. A short ramp cutting through a curb or built up to it.

Detectable Warning. *A standardized surface feature built in or applied to walking surfaces or other elements to warn visually impaired people of hazards on a circulation path.*

Dwelling Unit. A single unit which provides a kitchen or food preparation area, in addition to rooms and spaces for living, bathing, sleeping, and the like. *Dwelling units include a single family home or a townhouse used as a transient group home; an apartment building used as a shelter; guestrooms in a hotel that provide sleeping accommodations and food preparation areas; and other similar facilities used on a transient basis. For purposes of these guidelines, use of the term "Dwelling Unit" does not imply the unit is used as a residence.*

Egress, Means of. *A continuous and unobstructed way of exit travel from any point in a building or facility to a public way. A means of egress comprises vertical and horizontal travel and may include intervening room spaces, doorways, hallways, corridors, passageways, balconies, ramps, stairs, enclosures, lobbies, horizontal exits, courts and yards. An accessible means of egress is one that complies with these guidelines and does not include stairs, steps, or escalators. Areas of rescue assistance or evacuation elevators may be included as part of accessible means of egress.*

Element. *An architectural or mechanical component of a building, facility, space, or site, e.g., telephone, curb ramp, door, drinking fountain, seating, or water closet.*

Entrance. *Any access point to a building or portion of a building or facility used for the purpose of entering. An entrance includes the approach walk, the vertical access leading to the entrance platform, the entrance platform itself, vestibules if provided, the entry door(s) or gate(s), and the hardware of the entry door(s) or gate(s).*

Facility. *All or any portion of buildings, structures, site improvements, complexes, equipment, roads, walks, passageways, parking lots, or other real or personal property located on a site.*

Ground Floor. *Any occupiable floor less than one story above or below grade with direct access to grade. A building or facility always has at least one ground floor and may have more than one ground floor as where a split level entrance has been provided or where a building is built into a hillside.*

Mezzanine or Mezzanine Floor. *That portion of a story which is an intermediate floor level placed within the story and having occupiable space above and below its floor.*

Marked Crossing. A crosswalk or other identified path intended for pedestrian use in crossing a vehicular way.

Multifamily Dwelling. Any building containing more than two dwelling units.

Occupiable. *A room or enclosed space designed for human occupancy in which individuals congregate for amusement, educational or similar purposes, or in which occupants are engaged at labor, and which is equipped with means of egress, light, and ventilation.*

3.5 Definitions

Operable Part. A part of a piece of equipment or appliance used to insert or withdraw objects, or to activate, deactivate, or adjust the equipment or appliance (for example, coin slot, pushbutton, handle).

Path of Travel. *(Reserved).*

Power-assisted Door. A door used *for human passage* with a mechanism that helps to open the door, or relieves the opening resistance of a door, upon the activation of a switch or a continued force applied to the door itself.

Public Use. Describes interior or exterior rooms or spaces that are made available to the general public. Public use may be provided at a building or facility that is privately or publicly owned.

Ramp. A walking surface which has a running slope greater than 1:20.

Running Slope. The slope that is parallel to the direction of travel (see cross slope).

Service Entrance. An entrance intended primarily for delivery of goods or services.

Signage. *Displayed* verbal, symbolic, *tactile*, and pictorial information.

Site. A parcel of land bounded by a property line or a designated portion of a public right-of-way.

Site Improvement. Landscaping, paving for pedestrian and vehicular ways, outdoor lighting, recreational facilities, and the like, added to a site.

Sleeping Accommodations. Rooms in which people sleep; for example, dormitory and hotel or motel guest rooms or suites.

Space. *A definable area, e.g., room, toilet room, hall, assembly area, entrance, storage room, alcove, courtyard, or lobby.*

Story. *That portion of a building included between the upper surface of a floor and upper surface of the floor or roof next above. If such portion of a building does not include occupiable space, it is not considered a story for purposes of these guidelines. There may be more than one floor level within a story as in the case of a mezzanine or mezzanines.*

Structural Frame. The structural frame shall be considered to be the columns and the girders, beams, trusses and spandrels having direct connections to the columns and all other members which are essential to the stability of the building as a whole.

Tactile. Describes an object that can be perceived using the sense of touch.

Text Telephone. *Machinery or equipment that employs interactive graphic (i.e., typed) communications through the transmission of coded signals across the standard telephone network. Text telephones can include, for example, devices known as TDD's (telecommunication display devices or telecommunication devices for deaf persons) or computers.*

Transient Lodging. *A building, facility, or portion thereof, excluding inpatient medical care facilities, that contains one or more dwelling units or sleeping accommodations. Transient lodging may include, but is not limited to, resorts, group homes, hotels, motels, and dormitories.*

Vehicular Way. A route intended for vehicular traffic, such as a street, driveway, or parking lot.

Walk. An exterior pathway with a prepared surface intended for pedestrian use, including general pedestrian areas such as plazas and courts.

NOTE: Sections 4.1.1 through 4.1.7 are different from ANSI A117.1 in their entirety and are printed in standard type (ANSI A117.1 does not include scoping provisions).

4. ACCESSIBLE ELEMENTS AND SPACES: SCOPE AND TECHNICAL REQUIREMENTS.

4.1 Minimum Requirements

4.1.1* Application.

(1) General. All areas of newly designed or newly constructed buildings and facilities required to be accessible by 4.1.2 and 4.1.3 and altered portions of existing buildings and facilities required to be accessible by 4.1.6 shall comply with these guidelines, 4.1 through 4.35, unless otherwise provided in this section or as modified in a special application section.

(2) Application Based on Building Use. Special application sections 5 through 10 provide additional requirements for restaurants and cafeterias, medical care facilities, business and mercantile, libraries, accessible transient lodging, and transportation facilities. When a building or facility contains more than one use covered by a special application section, each portion shall comply with the requirements for that use.

(3)* Areas Used Only by Employees as Work Areas. Areas that are used only as work areas shall be designed and constructed so that individuals with disabilities can approach, enter, and exit the areas. These guidelines do not require that any areas used only as work areas be constructed to permit maneuvering within the work area or be constructed or equipped (i.e., with racks or shelves) to be accessible.

(4) Temporary Structures. These guidelines cover temporary buildings or facilities as well as permanent facilities. Temporary buildings and facilities are not of permanent construction but are extensively used or are essential for public use for a period of time. Examples of temporary buildings or facilities covered by these guidelines include, but are not limited to: reviewing stands, temporary classrooms, bleacher areas, exhibit areas, temporary banking facilities, temporary health screening services, or temporary safe pedestrian passageways around a construction site. Structures, sites and equipment directly associated with the actual processes of construction, such as scaffolding, bridging, materials hoists, or construction trailers are not included.

(5) General Exceptions.

(a) In new construction, a person or entity is not required to meet fully the requirements of these guidelines where that person or entity can demonstrate that it is structurally impracticable to do so. Full compliance will be considered structurally impracticable only in those rare circumstances when the unique characteristics of terrain prevent the incorporation of accessibility features. If full compliance with the requirements of these guidelines is structurally impracticable, a person or entity shall comply with the requirements to the extent it is not structurally impracticable. Any portion of the building or facility which can be made accessible shall comply to the extent that it is not structurally impracticable.

(b) Accessibility is not required to (i) observation galleries used primarily for security purposes; or (ii) in non-occupiable spaces accessed only by ladders, catwalks, crawl spaces, very narrow passageways, or freight (non-passenger) elevators, and frequented only by service personnel for repair purposes; such spaces include, but are not limited to, elevator pits, elevator penthouses, piping or equipment catwalks.

4.1.2 Accessible Sites and Exterior Facilities: New Construction. An accessible site shall meet the following minimum requirements:

(1) At least one accessible route complying with 4.3 shall be provided within the boundary of the site from public transportation stops, accessible parking spaces, passenger loading zones if provided, and public streets or sidewalks, to an accessible building entrance.

(2) At least one accessible route complying with 4.3 shall connect accessible buildings, accessible facilities, accessible elements, and accessible spaces that are on the same site.

(3) All objects that protrude from surfaces or posts into circulation paths shall comply with 4.4.

4.1.2 Accessible Sites and Exterior Facilities: New Construction

(4) Ground surfaces along accessible routes and in accessible spaces shall comply with 4.5.

(5) (a) If parking spaces are provided for self-parking by employees or visitors, or both, then accessible spaces complying with 4.6 shall be provided in each such parking area in conformance with the table below. Spaces required by the table need not be provided in the particular lot. They may be provided in a different location if equivalent or greater accessibility, in terms of distance from an accessible entrance, cost and convenience is ensured.

Total Parking in Lot	Required Minimum Number of Accessible Spaces
1 to 25	1
26 to 50	2
51 to 75	3
76 to 100	4
101 to 150	5
151 to 200	6
201 to 300	7
301 to 400	8
401 to 500	9
501 to 1000	2 percent of total
1001 and over	20 plus 1 for each 100 over 1000

Except as provided in (b), access aisles adjacent to accessible spaces shall be 60 in (1525 mm) wide minimum.

(b) One in every eight accessible spaces, but not less than one, shall be served by an access aisle 96 in (2440 mm) wide minimum and shall be designated "van accessible" as required by 4.6.4. The vertical clearance at such spaces shall comply with 4.6.5. All such spaces may be grouped on one level of a parking structure.

EXCEPTION: Provision of all required parking spaces in conformance with "Universal Parking Design" (see appendix A4.6.3) is permitted.

(c) If passenger loading zones are provided, then at least one passenger loading zone shall comply with 4.6.6.

(d) At facilities providing medical care and other services for persons with mobility impairments, parking spaces complying with 4.6 shall be provided in accordance with 4.1.2(5)(a) except as follows:

(i) Outpatient units and facilities: 10 percent of the total number of parking spaces provided serving each such outpatient unit or facility;

(ii) Units and facilities that specialize in treatment or services for persons with mobility impairments: 20 percent of the total number of parking spaces provided serving each such unit or facility.

(e)*Valet parking: Valet parking facilities shall provide a passenger loading zone complying with 4.6.6 located on an accessible route to the entrance of the facility. Paragraphs 5(a), 5(b), and 5(d) of this section do not apply to valet parking facilities.

(6) If toilet facilities are provided on a site, then each such public or common use toilet facility shall comply with 4.22. If bathing facilities are provided on a site, then each such public or common use bathing facility shall comply with 4.23.

For single user portable toilet or bathing units clustered at a single location, at least 5% but no less than one toilet unit or bathing unit complying with 4.22 or 4.23 shall be installed at each cluster whenever typical inaccessible units are provided. Accessible units shall be identified by the International Symbol of Accessibility.

EXCEPTION: Portable toilet units at construction sites used exclusively by construction personnel are not required to comply with 4.1.2(6).

(7) Building Signage. Signs which designate permanent rooms and spaces shall comply with 4.30.1, 4.30.4, 4.30.5 and 4.30.6. Other signs which provide direction to, or information about, functional spaces of the building shall comply with 4.30.1, 4.30.2, 4.30.3, and 4.30.5. Elements and spaces of accessible facilities which shall be identified by the International Symbol of Accessibility and which shall comply with 4.30.7 are:

(a) Parking spaces designated as reserved for individuals with disabilities;

(b) Accessible passenger loading zones;

(c) Accessible entrances when not all are accessible (inaccessible entrances shall have directional signage to indicate the route to the nearest accessible entrance);

(d) Accessible toilet and bathing facilities when not all are accessible.

4.1.3 Accessible Buildings: New Construction. Accessible buildings and facilities shall meet the following minimum requirements:

(1) At least one accessible route complying with 4.3 shall connect accessible building or facility entrances with all accessible spaces and elements within the building or facility.

(2) All objects that overhang or protrude into circulation paths shall comply with 4.4.

(3) Ground and floor surfaces along accessible routes and in accessible rooms and spaces shall comply with 4.5.

(4) Interior and exterior stairs connecting levels that are not connected by an elevator, ramp, or other accessible means of vertical access shall comply with 4.9.

(5)* One passenger elevator complying with 4.10 shall serve each level, including mezzanines, in all multi-story buildings and facilities unless exempted below. If more than one elevator is provided, each full passenger elevator shall comply with 4.10.

EXCEPTION 1: Elevators are not required in facilities that are less than three stories or that have less than 3000 square feet per story unless the building is a shopping center, a shopping mall, or the professional office of a health care provider, or another type of facility as determined by the Attorney General. The elevator exemption set forth in this paragraph does not obviate or limit in any way the obligation to comply with the other accessibility requirements established in section 4.1.3. For example, floors above or below the accessible ground floor must meet the requirements of this section except for elevator service. If toilet or bathing facilities are provided on a level not served by an elevator, then toilet or bathing facilities must be provided on the accessible ground floor. In new construction if a building or facility is eligible for this exemption but a full passenger elevator is nonetheless planned, that elevator shall meet the requirements of 4.10 and shall serve each level in the building. A full passenger elevator that provides service from a garage to only one level of a building or facility is not required to serve other levels.

EXCEPTION 2: Elevator pits, elevator penthouses, mechanical rooms, piping or equipment catwalks are exempted from this requirement.

EXCEPTION 3: Accessible ramps complying with 4.8 may be used in lieu of an elevator.

EXCEPTION 4: Platform lifts (wheelchair lifts) complying with 4.11 of this guideline and applicable state or local codes may be used in lieu of an elevator only under the following conditions:

(a) To provide an accessible route to a performing area in an assembly occupancy.

(b) To comply with the wheelchair viewing position line-of-sight and dispersion requirements of 4.33.3.

(c) To provide access to incidental occupiable spaces and rooms which are not open to the general public and which house no more than five persons, including but not limited to equipment control rooms and projection booths.

(d) To provide access where existing site constraints or other constraints make use of a ramp or an elevator infeasible.

(6) Windows: (Reserved).

(7) Doors:

(a) At each accessible entrance to a building or facility, at least one door shall comply with 4.13.

(b) Within a building or facility, at least one door at each accessible space shall comply with 4.13.

(c) Each door that is an element of an accessible route shall comply with 4.13.

4.1.3 Accessible Buildings: New Construction

(d) Each door required by 4.3.10, Egress, shall comply with 4.13.

(8) In new construction, at a minimum, the requirements in (a) and (b) below shall be satisfied independently:

(a)(i) At least 50% of all public entrances (excluding those in (b) below) must be accessible. At least one must be a ground floor entrance. Public entrances are any entrances that are not loading or service entrances.

(ii) Accessible entrances must be provided in a number at least equivalent to the number of exits required by the applicable building/fire codes. (This paragraph does not require an increase in the total number of entrances planned for a facility.)

(iii) An accessible entrance must be provided to each tenancy in a facility (for example, individual stores in a strip shopping center).

One entrance may be considered as meeting more than one of the requirements in (a). Where feasible, accessible entrances shall be the entrances used by the majority of people visiting or working in the building.

(b)(i) In addition, if direct access is provided for pedestrians from an enclosed parking garage to the building, at least one direct entrance from the garage to the building must be accessible.

(ii) If access is provided for pedestrians from a pedestrian tunnel or elevated walkway, one entrance to the building from each tunnel or walkway must be accessible.

One entrance may be considered as meeting more than one of the requirements in (b).

Because entrances also serve as emergency exits whose proximity to all parts of buildings and facilities is essential, it is preferable that all entrances be accessible.

(c) If the only entrance to a building, or tenancy in a facility, is a service entrance, that entrance shall be accessible.

(d) Entrances which are not accessible shall have directional signage complying with 4.30.1, 4.30.2, 4.30.3, and 4.30.5, which indicates the location of the nearest accessible entrance.

(9)* In buildings or facilities, or portions of buildings or facilities, required to be accessible, accessible means of egress shall be provided in the same number as required for exits by local building/life safety regulations. Where a required exit from an occupiable level above or below a level of accessible exit discharge is not accessible, an area of rescue assistance shall be provided on each such level (in a number equal to that of inaccessible required exits). Areas of rescue assistance shall comply with 4.3.11. A horizontal exit, meeting the requirements of local building/life safety regulations, shall satisfy the requirement for an area of rescue assistance.

EXCEPTION: Areas of rescue assistance are not required in buildings or facilities having a supervised automatic sprinkler system.

(10)* Drinking Fountains:

(a) Where only one drinking fountain is provided on a floor there shall be a drinking fountain which is accessible to individuals who use wheelchairs in accordance with 4.15 and one accessible to those who have difficulty bending or stooping. (This can be accommodated by the use of a "hi-lo" fountain; by providing one fountain accessible to those who use wheelchairs and one fountain at a standard height convenient for those who have difficulty bending; by providing a fountain accessible under 4.15 and a water cooler; or by such other means as would achieve the required accessibility for each group on each floor.)

(b) Where more than one drinking fountain or water cooler is provided on a floor, 50% of those provided shall comply with 4.15 and shall be on an accessible route.

(11) Toilet Facilities: If toilet rooms are provided, then each public and common use toilet room shall comply with 4.22. Other toilet rooms provided for the use of occupants of specific spaces (i.e., a private toilet room for the occupant of a private office) shall be adaptable. If bathing rooms are provided, then each public and common use bathroom shall comply with 4.23. Accessible toilet rooms and bathing facilities shall be on an accessible route.

4.1.3 Accessible Buildings: New Construction

(12) Storage, Shelving and Display Units:

(a) If fixed or built-in storage facilities such as cabinets, shelves, closets, and drawers are provided in accessible spaces, at least one of each type provided shall contain storage space complying with 4.25. Additional storage may be provided outside of the dimensions required by 4.25.

(b) Shelves or display units allowing self-service by customers in mercantile occupancies shall be located on an accessible route complying with 4.3. Requirements for accessible reach range do not apply.

(13) Controls and operating mechanisms in accessible spaces, along accessible routes, or as parts of accessible elements (for example, light switches and dispenser controls) shall comply with 4.27.

(14) If emergency warning systems are provided, then they shall include both audible alarms and visual alarms complying with 4.28. Sleeping accommodations required to comply with 9.3 shall have an alarm system complying with 4.28. Emergency warning systems in medical care facilities may be modified to suit standard health care alarm design practice.

(15) Detectable warnings shall be provided at locations as specified in 4.29.

(16) Building Signage:

(a) Signs which designate permanent rooms and spaces shall comply with 4.30.1, 4.30.4, 4.30.5 and 4.30.6.

(b) Other signs which provide direction to or information about functional spaces of the building shall comply with 4.30.1, 4.30.2, 4.30.3, and 4.30.5.

EXCEPTION: Building directories, menus, and all other signs which are temporary are not required to comply.

(17) Public Telephones:

(a) If public pay telephones, public closed circuit telephones, or other public telephones are provided, then they shall comply with 4.31.2 through 4.31.8 to the extent required by the following table:

Number of each type of telephone provided on each floor	Number of telephones required to comply with 4.31.2 through 4.31.8[1]
1 or more single unit	1 per floor
1 bank[2]	1 per floor
2 or more banks[2]	1 per bank. Accessible unit may be installed as a single unit in proximity (either visible or with signage) to the bank. At least one public telephone per floor shall meet the requirements for a forward reach telephone[3].

[1] Additional public telephones may be installed at any height. Unless otherwise specified, accessible telephones may be either forward or side reach telephones.

[2] A bank consists of two or more adjacent public telephones, often installed as a unit.

[3] EXCEPTION: For exterior installations only, if dial tone first service is available, then a side reach telephone may be installed instead of the required forward reach telephone (i.e., one telephone in proximity to each bank shall comply with 4.31).

(b)* All telephones required to be accessible and complying with 4.31.2 through 4.31.8 shall be equipped with a volume control. In addition, 25 percent, but never less than one, of all other public telephones provided shall be equipped with a volume control and shall be dispersed among all types of public telephones, including closed circuit telephones, throughout the building or facility. Signage complying with applicable provisions of 4.30.7 shall be provided.

(c) The following shall be provided in accordance with 4.31.9:

(i) If a total number of four or more public pay telephones (including both interior and exterior phones) is provided at a site, and at least one is in an interior location, then at least one interior public text telephone shall be provided.

(ii) If an interior public pay telephone is provided in a stadium or arena, in a convention center, in a hotel with a convention center, or

4.1.3 Accessible Buildings: New Construction

in a covered mall, at least one interior public text telephone shall be provided in the facility.

(iii) if a public pay telephone is located in or adjacent to a hospital emergency room, hospital recovery room, or hospital waiting room, one public text telephone shall be provided at each such location.

(d) Where a bank of telephones in the interior of a building consists of three or more public pay telephones, at least one public pay telephone in each such bank shall be equipped with a shelf and outlet in compliance with 4.31.9(2).

(18) If fixed or built-in seating or tables (including, but not limited to, study carrels and student laboratory stations), are provided in accessible public or common use areas, at least five percent (5%), but not less than one, of the fixed or built-in seating areas or tables shall comply with 4.32. An accessible route shall lead to and through such fixed or built-in seating areas, or tables.

(19)* Assembly areas:

(a) In places of assembly with fixed seating accessible wheelchair locations shall comply with 4.33.2, 4.33.3, and 4.33.4 and shall be provided consistent with the following table:

Capacity of Seating in Assembly Areas	Number of Required Wheelchair Locations
4 to 25	1
26 to 50	2
51 to 300	4
301 to 500	6
over 500	6, plus 1 additional space for each total seating capacity increase of 100

In addition, one percent, but not less than one, of all fixed seats shall be aisle seats with no armrests on the aisle side, or removable or folding armrests on the aisle side. Each such seat shall be identified by a sign or marker. Signage notifying patrons of the availability of such seats shall be posted at the ticket office. Aisle seats are not required to comply with 4.33.4.

(b) This paragraph applies to assembly areas where audible communications are integral to the use of the space (e.g., concert and lecture halls, playhouses and movie theaters, meeting rooms, etc.). Such assembly areas, if (1) they accommodate at least 50 persons, or if they have audio-amplification systems, and (2) they have fixed seating, shall have a permanently installed assistive listening system complying with 4.33. For other assembly areas, a permanently installed assistive listening system, or an adequate number of electrical outlets or other supplementary wiring necessary to support a portable assistive listening system shall be provided. The minimum number of receivers to be provided shall be equal to 4 percent of the total number of seats, but in no case less than two. Signage complying with applicable provisions of 4.30 shall be installed to notify patrons of the availability of a listening system.

(20) Where automated teller machines (ATMs) are provided, each ATM shall comply with the requirements of 4.34 except where two or more are provided at a location, then only one must comply.

EXCEPTION: Drive-up-only automated teller machines are not required to comply with 4.27.2, 4.27.3 and 4.34.3.

(21) Where dressing and fitting rooms are provided for use by the general public, patients, customers or employees, 5 percent, but never less than one, of dressing rooms for each type of use in each cluster of dressing rooms shall be accessible and shall comply with 4.35.

Examples of types of dressing rooms are those serving different genders or distinct and different functions as in different treatment or examination facilities.

4.1.4 (Reserved).

4.1.5 Accessible Buildings: Additions. Each addition to an existing building or facility shall be regarded as an alteration. Each space or element added to the existing building or facility shall comply with the applicable provisions of 4.1.1 to 4.1.3, Minimum Requirements (for New Construction) and the applicable technical specifications of 4.2 through 4.35 and sections 5 through 10. Each addition that

affects or could affect the usability of an area containing a primary function shall comply with 4.1.6(2).

4.1.6 Accessible Buildings: Alterations.

(1) General. Alterations to existing buildings and facilities shall comply with the following:

(a) No alteration shall be undertaken which decreases or has the effect of decreasing accessibility or usability of a building or facility below the requirements for new construction at the time of alteration.

(b) If existing elements, spaces, or common areas are altered, then each such altered element, space, feature, or area shall comply with the applicable provisions of 4.1.1 to 4.1.3 Minimum Requirements (for New Construction). If the applicable provision for new construction requires that an element, space, or common area be on an accessible route, the altered element, space, or common area is not required to be on an accessible route except as provided in 4.1.6(2) (Alterations to an Area Containing a Primary Function.)

(c) If alterations of single elements, when considered together, amount to an alteration of a room or space in a building or facility, the entire space shall be made accessible.

(d) No alteration of an existing element, space, or area of a building or facility shall impose a requirement for greater accessibility than that which would be required for new construction. For example, if the elevators and stairs in a building are being altered and the elevators are, in turn, being made accessible, then no accessibility modifications are required to the stairs connecting levels connected by the elevator. If stair modifications to correct unsafe conditions are required by other codes, the modifications shall be done in compliance with these guidelines unless technically infeasible.

(e) At least one interior public text telephone complying with 4.31.9 shall be provided if:

(i) alterations to existing buildings or facilities with less than four exterior or interior public pay telephones would increase the total number to four or more telephones with at least one in an interior location; or

(ii) alterations to one or more exterior or interior public pay telephones occur in an existing building or facility with four or more public telephones with at least one in an interior location.

(f) If an escalator or stair is planned or installed where none existed previously and major structural modifications are necessary for such installation, then a means of accessible vertical access shall be provided that complies with the applicable provisions of 4.7, 4.8, 4.10, or 4.11.

(g) In alterations, the requirements of 4.1.3(9), 4.3.10 and 4.3.11 do not apply.

(h)*Entrances: If a planned alteration entails alterations to an entrance, and the building has an accessible entrance, the entrance being altered is not required to comply with 4.1.3(8), except to the extent required by 4.1.6(2). If a particular entrance is not made accessible, appropriate accessible signage indicating the location of the nearest accessible entrance(s) shall be installed at or near the inaccessible entrance, such that a person with disabilities will not be required to retrace the approach route from the inaccessible entrance.

(i) If the alteration work is limited solely to the electrical, mechanical, or plumbing system, or to hazardous material abatement, or automatic sprinkler retrofitting, and does not involve the alteration of any elements or spaces required to be accessible under these guidelines, then 4.1.6(2) does not apply.

(j) EXCEPTION: In alteration work, if compliance with 4.1.6 is technically infeasible, the alteration shall provide accessibility to the maximum extent feasible. Any elements or features of the building or facility that are being altered and can be made accessible shall be made accessible within the scope of the alteration.

Technically Infeasible. Means, with respect to an alteration of a building or a facility, that it has little likelihood of being accomplished because existing structural conditions would require removing or altering a load-bearing member which is an essential part of the structural frame; or because other existing physical or site constraints prohibit modification or

4.1.6 Accessible Buildings: Alterations

addition of elements, spaces, or features which are in full and strict compliance with the minimum requirements for new construction and which are necessary to provide accessibility.

(k) EXCEPTION:

(i) These guidelines do not require the installation of an elevator in an altered facility that is less than three stories or has less than 3,000 square feet per story unless the building is a shopping center, a shopping mall, the professional office of a health care provider, or another type of facility as determined by the Attorney General.

(ii) The exemption provided in paragraph (i) does not obviate or limit in any way the obligation to comply with the other accessibility requirements established in these guidelines. For example, alterations to floors above or below the ground floor must be accessible regardless of whether the altered facility has an elevator. If a facility subject to the elevator exemption set forth in paragraph (i) nonetheless has a full passenger elevator, that elevator shall meet, to the maximum extent feasible, the accessibility requirements of these guidelines.

(2) Alterations to an Area Containing a Primary Function: In addition to the requirements of 4.1.6(1), an alteration that affects or could affect the usability of or access to an area containing a primary function shall be made so as to ensure that, to the maximum extent feasible, the path of travel to the altered area and the restrooms, telephones, and drinking fountains serving the altered area, are readily accessible to and usable by individuals with disabilities, unless such alterations are disproportionate to the overall alterations in terms of cost and scope (as determined under criteria established by the Attorney General).

(3) Special Technical Provisions for Alterations to Existing Buildings and Facilities:

(a) Ramps: Curb ramps and interior or exterior ramps to be constructed on sites or in existing buildings or facilities where space limitations prohibit the use of a 1:12 slope or less may have slopes and rises as follows:

(i) A slope between 1:10 and 1:12 is allowed for a maximum rise of 6 inches.

(ii) A slope between 1:8 and 1:10 is allowed for a maximum rise of 3 inches. A slope steeper than 1:8 is not allowed.

(b) Stairs: Full extension of handrails at stairs shall not be required in alterations where such extensions would be hazardous or impossible due to plan configuration.

(c) Elevators:

(i) If safety door edges are provided in existing automatic elevators, automatic door reopening devices may be omitted (see 4.10.6).

(ii) Where existing shaft configuration or technical infeasibility prohibits strict compliance with 4.10.9, the minimum car plan dimensions may be reduced by the minimum amount necessary, but in no case shall the inside car area be smaller than 48 in by 48 in.

(iii) Equivalent facilitation may be provided with an elevator car of different dimensions when usability can be demonstrated and when all other elements required to be accessible comply with the applicable provisions of 4.10. For example, an elevator of 47 in by 69 in (1195 mm by 1755 mm) with a door opening on the narrow dimension, could accommodate the standard wheelchair clearances shown in Figure 4.

(d) Doors:

(i) Where it is technically infeasible to comply with clear opening width requirements of 4.13.5, a projection of 5/8 in maximum will be permitted for the latch side stop.

(ii) If existing thresholds are 3/4 in high or less, and have (or are modified to have) a beveled edge on each side, they may remain.

(e) Toilet Rooms:

(i) Where it is technically infeasible to comply with 4.22 or 4.23, the installation of at least one unisex toilet/bathroom per floor, located in the same area as existing toilet facilities, will be permitted in lieu of modifying existing toilet facilities to be accessible. Each unisex toilet room shall contain one water closet complying with 4.16 and one lavatory complying with 4.19, and the door shall have a privacy latch.

(ii) Where it is technically infeasible to install a required standard stall (Fig. 30(a)), or where other codes prohibit reduction of the fixture count (i.e., removal of a water closet in order to create a double-wide stall), either alternate stall (Fig.30(b)) may be provided in lieu of the standard stall.

(iii) When existing toilet or bathing facilities are being altered and are not made accessible, signage complying with 4.30.1, 4.30.2, 4.30.3, 4.30.5, and 4.30.7 shall be provided indicating the location of the nearest accessible toilet or bathing facility within the facility.

(f) Assembly Areas:

(i) Where it is technically infeasible to disperse accessible seating throughout an altered assembly area, accessible seating areas may be clustered. Each accessible seating area shall have provisions for companion seating and shall be located on an accessible route that also serves as a means of emergency egress.

(ii) Where it is technically infeasible to alter all performing areas to be on an accessible route, at least one of each type of performing area shall be made accessible.

(g) Platform Lifts (Wheelchair Lifts): In alterations, platform lifts (wheelchair lifts) complying with 4.11 and applicable state or local codes may be used as part of an accessible route. The use of lifts is not limited to the four conditions in exception 4 of 4.1.3(5).

(h) Dressing Rooms: In alterations where technical infeasibility can be demonstrated, one dressing room for each sex on each level shall be made accessible. Where only unisex dressing rooms are provided, accessible unisex dressing rooms may be used to fulfill this requirement.

4.1.7 Accessible Buildings: Historic Preservation.

(1) Applicability:

(a) General Rule. Alterations to a qualified historic building or facility shall comply with 4.1.6 Accessible Buildings: Alterations, the applicable technical specifications of 4.2 through 4.35 and the applicable special application sections 5 through 10 unless it is determined in accordance with the procedures in 4.1.7(2) that compliance with the requirements for accessible routes (exterior and interior), ramps, entrances, or toilets would threaten or destroy the historic significance of the building or facility in which case the alternative requirements in 4.1.7(3) may be used for the feature.

EXCEPTION: (Reserved).

(b) Definition. A qualified historic building or facility is a building or facility that is:

(i) Listed in or eligible for listing in the National Register of Historic Places; or

(ii) Designated as historic under an appropriate State or local law.

(2) Procedures:

(a) Alterations to Qualified Historic Buildings and Facilities Subject to Section 106 of the National Historic Preservation Act:

(i) Section 106 Process. Section 106 of the National Historic Preservation Act (16 U.S.C. 470 f) requires that a Federal agency with jurisdiction over a Federal, federally assisted, or federally licensed undertaking consider the effects of the agency's undertaking on buildings and facilities listed in or eligible for listing in the National Register of Historic Places and give the Advisory Council on Historic Preservation a reasonable opportunity to comment on the undertaking prior to approval of the undertaking.

(ii) ADA Application. Where alterations are undertaken to a qualified historic building or facility that is subject to section 106 of the National Historic Preservation Act, the Federal agency with jurisdiction over the undertaking shall follow the section 106 process. If the State Historic Preservation Officer or Advisory Council on Historic Preservation agrees that compliance with the requirements for accessible routes (exterior and interior), ramps, entrances, or toilets would threaten or destroy the historic significance of the building or facility, the alternative requirements in 4.1.7(3) may be used for the feature.

4.2 Space Allowance and Reach Ranges

(b) Alterations to Qualified Historic Buildings and Facilities Not Subject to Section 106 of the National Historic Preservation Act. Where alterations are undertaken to a qualified historic building or facility that is not subject to section 106 of the National Historic Preservation Act, if the entity undertaking the alterations believes that compliance with the requirements for accessible routes (exterior and interior), ramps, entrances, or toilets would threaten or destroy the historic significance of the building or facility and that the alternative requirements in 4.1.7(3) should be used for the feature, the entity should consult with the State Historic Preservation Officer. If the State Historic Preservation Officer agrees that compliance with the accessibility requirements for accessible routes (exterior and interior), ramps, entrances or toilets would threaten or destroy the historical significance of the building or facility, the alternative requirements in 4.1.7(3) may be used.

(c) Consultation With Interested Persons. Interested persons should be invited to participate in the consultation process, including State or local accessibility officials, individuals with disabilities, and organizations representing individuals with disabilities.

(d) Certified Local Government Historic Preservation Programs. Where the State Historic Preservation Officer has delegated the consultation responsibility for purposes of this section to a local government historic preservation program that has been certified in accordance with section 101(c) of the National Historic Preservation Act of 1966 (16 U.S.C. 470a (c)) and implementing regulations (36 CFR 61.5), the responsibility may be carried out by the appropriate local government body or official.

(3) Historic Preservation: Minimum Requirements:

(a) At least one accessible route complying with 4.3 from a site access point to an accessible entrance shall be provided.

EXCEPTION: A ramp with a slope no greater than 1:6 for a run not to exceed 2 ft (610 mm) may be used as part of an accessible route to an entrance.

(b) At least one accessible entrance complying with 4.14 which is used by the public shall be provided.

EXCEPTION: If it is determined that no entrance used by the public can comply with 4.14, then access at any entrance not used by the general public but open (unlocked) with directional signage at the primary entrance may be used. The accessible entrance shall also have a notification system. Where security is a problem, remote monitoring may be used.

(c) If toilets are provided, then at least one toilet facility complying with 4.22 and 4.1.6 shall be provided along an accessible route that complies with 4.3. Such toilet facility may be unisex in design.

(d) Accessible routes from an accessible entrance to all publicly used spaces on at least the level of the accessible entrance shall be provided. Access shall be provided to all levels of a building or facility in compliance with 4.1 whenever practical.

(e) Displays and written information, documents, etc., should be located where they can be seen by a seated person. Exhibits and signage displayed horizontally (e.g., open books), should be no higher than 44 in (1120 mm) above the floor surface.

NOTE: The technical provisions of sections 4.2 through 4.35 are the same as those of the American National Standard Institute's document A117.1-1980, except as noted in the text.

4.2 Space Allowance and Reach Ranges.

4.2.1* Wheelchair Passage Width. The minimum clear width for single wheelchair passage shall be 32 in (815 mm) at a point and 36 in (915 mm) continuously (see Fig. 1 and 24(e)).

4.2.2 Width for Wheelchair Passing. The minimum width for two wheelchairs to pass is 60 in (1525 mm) (see Fig. 2).

4.2.3* Wheelchair Turning Space. The space required for a wheelchair to make a 180-degree turn is a clear space of 60 in (1525 mm)

4.2.4* Clear Floor or Ground Space for Wheelchairs

diameter (see Fig. 3(a)) or a T-shaped space (see Fig. 3(b)).

4.2.4* Clear Floor or Ground Space for Wheelchairs.

4.2.4.1 Size and Approach. The minimum clear floor or ground space required to accommodate a single, stationary wheelchair and occupant is 30 in by 48 in (760 mm by 1220 mm) (see Fig. 4(a)). The minimum clear floor or ground space for wheelchairs may be positioned for forward or parallel approach to an object (see Fig. 4(b) and (c)). Clear floor or ground space for wheelchairs may be part of the knee space required under some objects.

4.2.4.2 Relationship of Maneuvering Clearance to Wheelchair Spaces. One full unobstructed side of the clear floor or ground space for a wheelchair shall adjoin or overlap an accessible route or adjoin another wheelchair clear floor space. If a clear floor space is located in an alcove or otherwise confined on all or part of three sides, additional maneuvering clearances shall be provided as shown in Fig. 4(d) and (e).

4.2.4.3 Surfaces for Wheelchair Spaces. Clear floor or ground spaces for wheelchairs shall comply with 4.5.

4.2.5* Forward Reach. If the clear floor space only allows forward approach to an object, the maximum high forward reach allowed shall be 48 in (1220 mm) (see Fig. 5(a)). *The minimum low forward reach is 15 in (380 mm).* If the high forward reach is over an obstruction, reach and clearances shall be as shown in Fig. 5(b).

4.2.6* Side Reach. If the clear floor space allows parallel approach by a person in a wheelchair, the maximum high side reach allowed shall be 54 in (1370 mm) and the low side reach shall be no less than 9 in (230 mm) above the floor (Fig. 6(a) and (b)). If the side reach is over an obstruction, the reach and clearances shall be as shown in Fig 6(c).

4.3 Accessible Route.

4.3.1* General. All walks, halls, corridors, aisles, *skywalks, tunnels,* and other spaces

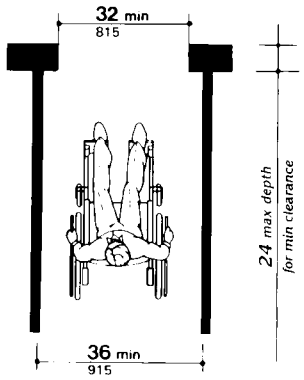

Fig. 1
Minimum Clear Width
for Single Wheelchair

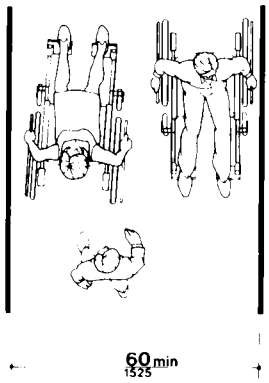

Fig. 2
Minimum Clear Width
for Two Wheelchairs

4.3 Accesssible Route

that are part of an accessible route shall comply with 4.3.

4.3.2 Location.

(1) At least one accessible route *within the boundary of the site* shall be provided from public transportation stops, accessible parking, and accessible passenger loading zones, and public streets or sidewalks to the accessible building entrance they serve. *The accessible route shall, to the maximum extent feasible, coincide with the route for the general public.*

(2) At least one accessible route shall connect accessible buildings, facilities, elements, and spaces that are on the same site.

(3) At least one accessible route shall connect accessible building or facility entrances with all accessible spaces and elements and with all accessible dwelling units within the building or facility.

(4) An accessible route shall connect at least one accessible entrance of each accessible dwelling unit with those exterior and interior spaces and facilities that serve the accessible dwelling unit.

4.3.3 Width. The minimum clear width of an accessible route shall be 36 in (915 mm) except at doors (see 4.13.5 and 4.13.6). If a person in a wheelchair must make a turn around an obstruction, the minimum clear width of the accessible route shall be as shown in Fig. 7(a) and (b).

4.3.4 Passing Space. If an accessible route has less than 60 in (1525 mm) clear width, then passing spaces at least 60 in by 60 in (1525 mm by 1525 mm) shall be located at reasonable intervals not to exceed 200 ft (61 m). A T-intersection of two corridors or walks is an acceptable passing place.

4.3.5 Head Room. Accessible routes shall comply with 4.4.2.

4.3.6 Surface Textures. The surface of an accessible route shall comply with 4.5.

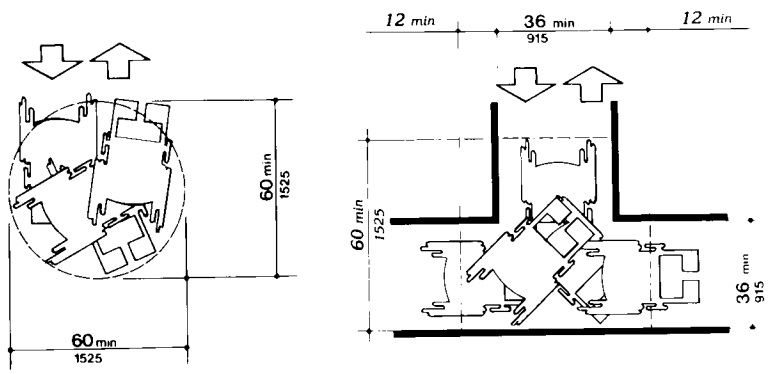

(a)
60-in (1525-mm)-Diameter Space

(b)
T-Shaped Space for 180° Turns

Fig. 3
Wheelchair Turning Space

4.3 Accessible Route

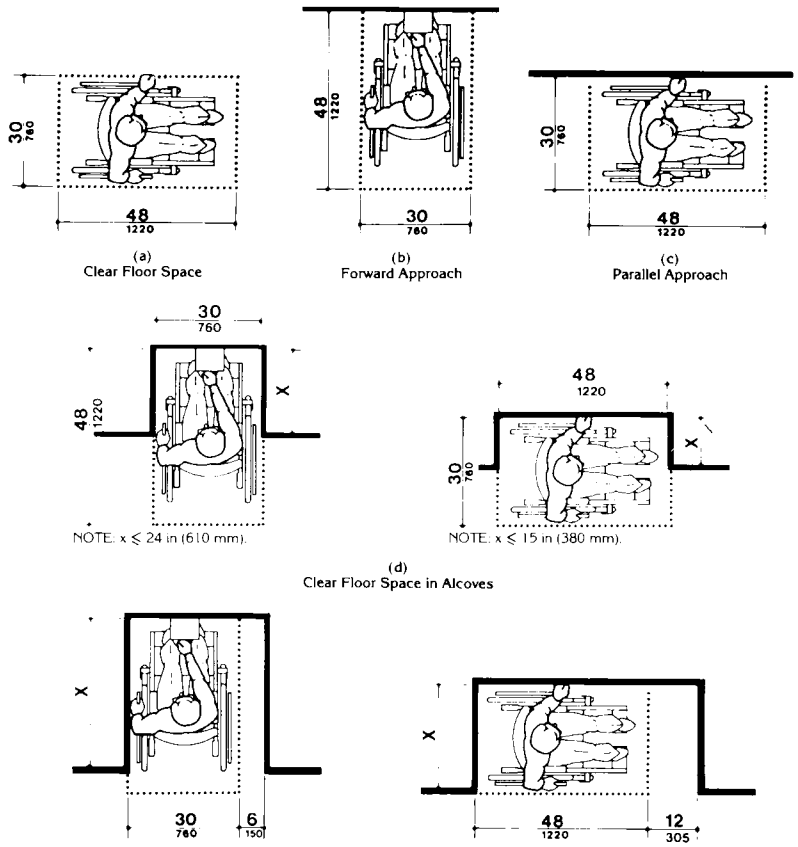

Fig. 4
Minimum Clear Floor Space for Wheelchairs

17

4.3 Accessible Route

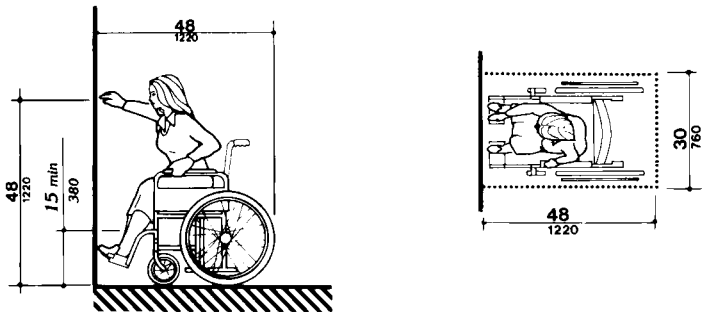

(a)
High Forward Reach Limit

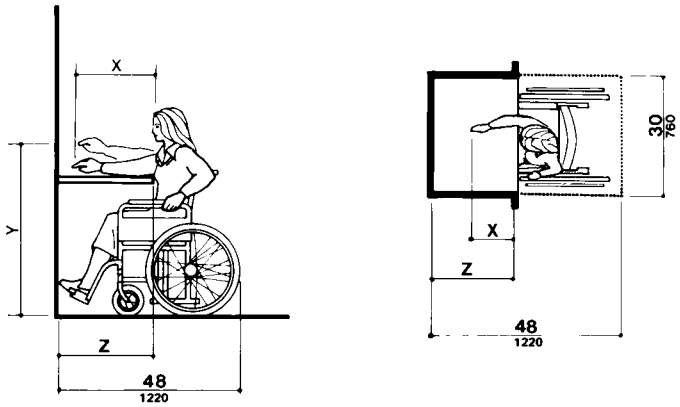

NOTE: x shall be ≤ 25 in (635 mm); z shall be ≥ x. When x < 20 in (510 mm), then y shall be 48 in (1220 mm) maximum. When x is 20 to 25 in (510 to 635 mm), then y shall be 44 in (1120 mm) maximum.

(b)
Maximum Forward Reach over an Obstruction

Fig. 5
Forward Reach

4.3.7 Slope

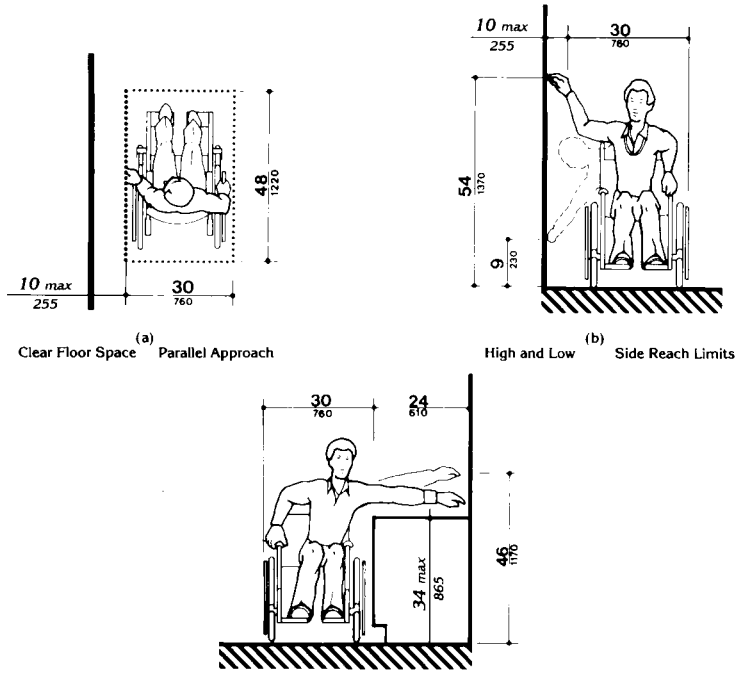

Fig. 6
Side Reach

4.3.7 Slope. An accessible route with a running slope greater than 1:20 is a ramp and shall comply with 4.8. Nowhere shall the cross slope of an accessible route exceed 1:50.

4.3.8 Changes in Levels. Changes in levels along an accessible route shall comply with 4.5.2. If an accessible route has changes in level greater than 1/2 in (13 mm), then a curb ramp, ramp, elevator, or platform lift *(as permitted in 4.1.3 and 4.1.6)* shall be provided that complies with 4.7, 4.8, 4.10, or 4.11, respectively. An accessible route does not include stairs, steps, or escalators. See definition of "egress, means of" in 3.5.

4.3.9 Doors. Doors along an accessible route shall comply with 4.13.

4.3.10* Egress

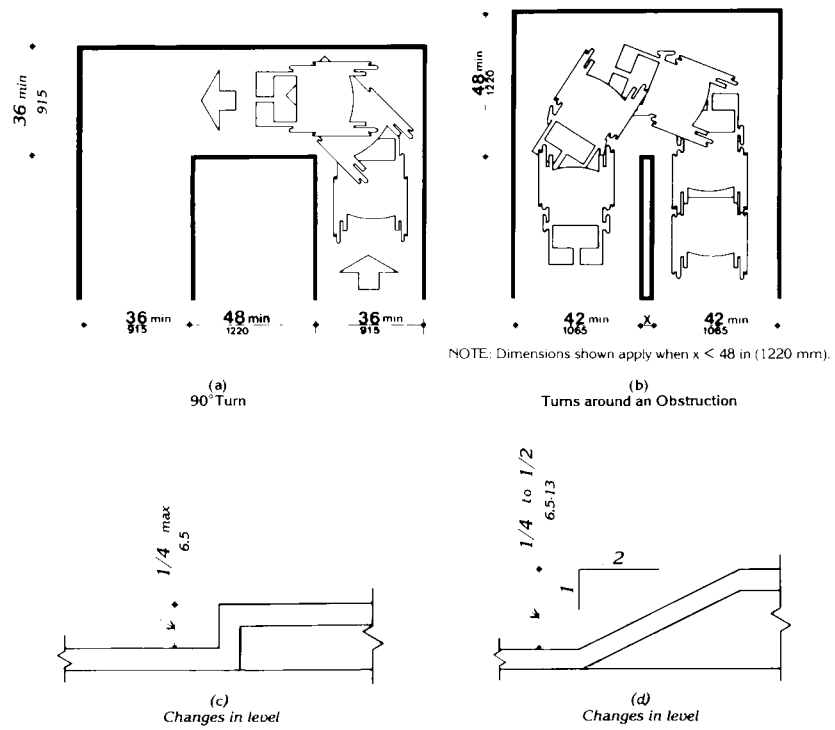

Fig. 7
Accessible Route

4.3.10* Egress. Accessible routes serving any accessible space or element shall also serve as a means of egress for emergencies or connect to an accessible area of *rescue assistance.*

4.3.11 Areas of Rescue Assistance.

4.3.11.1 Location and Construction. *An area of rescue assistance shall be one of the following:*

(1) A portion of a stairway landing within a smokeproof enclosure (complying with local requirements).

(2) A portion of an exterior exit balcony located immediately adjacent to an exit stairway when the balcony complies with local requirements for exterior exit balconies. Openings to the interior of the building located within 20 feet (6 m) of the

area of rescue assistance shall be protected with fire assemblies having a three-fourths hour fire protection rating.

(3) A portion of a one-hour fire-resistive corridor (complying with local requirements for fire-resistive construction and for openings) located immediately adjacent to an exit enclosure.

(4) A vestibule located immediately adjacent to an exit enclosure and constructed to the same fire-resistive standards as required for corridors and openings.

(5) A portion of a stairway landing within an exit enclosure which is vented to the exterior and is separated from the interior of the building with not less than one-hour fire-resistive doors.

(6) When approved by the appropriate local authority, an area or a room which is separated from other portions of the building by a smoke barrier. Smoke barriers shall have a fire-resistive rating of not less than one hour and shall completely enclose the area or room. Doors in the smoke barrier shall be tight-fitting smoke- and draft-control assemblies having a fire-protection rating of not less than 20 minutes and shall be self-closing or automatic closing. The area or room shall be provided with an exit directly to an exit enclosure. Where the room or area exits into an exit enclosure which is required to be of more than one-hour fire-resistive construction, the room or area shall have the same fire-resistive construction, including the same opening protection, as required for the adjacent exit enclosure.

(7) An elevator lobby when elevator shafts and adjacent lobbies are pressurized as required for smokeproof enclosures by local regulations and when complying with requirements herein for size, communication, and signage. Such pressurization system shall be activated by smoke detectors on each floor located in a manner approved by the appropriate local authority. Pressurization equipment and its duct work within the building shall be separated from other portions of the building by a minimum two-hour fire-resistive construction.

4.3.11.2 Size. *Each area of rescue assistance shall provide at least two accessible areas each being not less than 30 inches by 48 inches (760 mm by 1220 mm). The area of rescue assistance shall not encroach on any required exit width. The total number of such 30-inch by 48-inch (760 mm by 1220 mm) areas per story shall be not less than one for every 200 persons of calculated occupant load served by the area of rescue assistance.*

EXCEPTION: The appropriate local authority may reduce the minimum number of 30-inch by 48-inch (760 mm by 1220 mm) areas to one for each area of rescue assistance on floors where the occupant load is less than 200.

4.3.11.3* Stairway Width. *Each stairway adjacent to an area of rescue assistance shall have a minimum clear width of 48 inches between handrails.*

4.3.11.4* Two-way Communication. *A method of two-way communication, with both visible and audible signals, shall be provided between each area of rescue assistance and the primary entry. The fire department or appropriate local authority may approve a location other than the primary entry.*

4.3.11.5 Identification. *Each area of rescue assistance shall be identified by a sign which states "AREA OF RESCUE ASSISTANCE" and displays the international symbol of accessibility. The sign shall be illuminated when exit sign illumination is required. Signage shall also be installed at all inaccessible exits and where otherwise necessary to clearly indicate the direction to areas of rescue assistance. In each area of rescue assistance, instructions on the use of the area under emergency conditions shall be posted adjoining the two-way communication system.*

4.4 Protruding Objects.

4.4.1* General. Objects projecting from walls (for example, telephones) with their leading edges between 27 in and 80 in (685 mm and 2030 mm) above the finished floor shall protrude no more than 4 in (100 mm) into walks, halls, corridors, passageways, or aisles (see Fig. 8(a)). Objects mounted with their leading edges at or below 27 in (685 mm) above the finished floor may protrude any amount (see Fig. 8(a) and (b)). Free-standing objects mounted on posts or pylons may overhang 12 in (305 mm) maximum from 27 in to 80 in (685 mm to 2030 mm) above the ground or

4.4 Protruding Objects

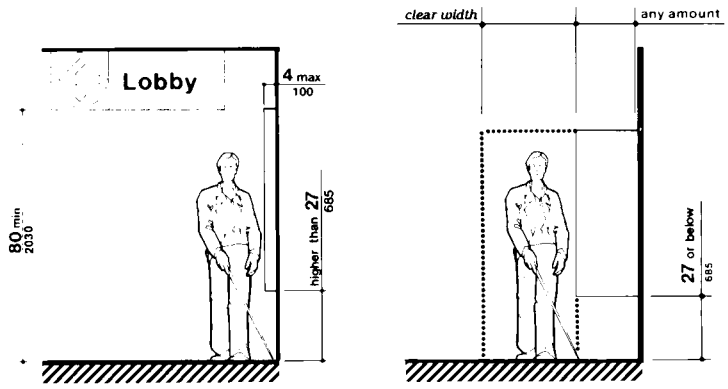

Fig. 8 (a)
Walking Parallel to a Wall

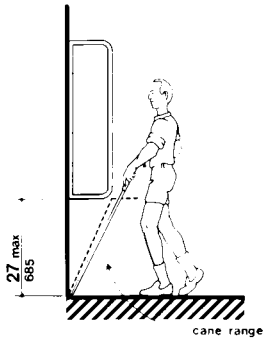

Fig. 8 (b)
Walking Perpendicular to a Wall

Fig. 8
Protruding Objects

finished floor (see Fig. 8(c) and (d)). Protruding objects shall not reduce the clear width of an accessible route or maneuvering space (see Fig. 8(e)).

4.4.2 Head Room. Walks, halls, corridors, passageways, aisles, or other circulation spaces shall have 80 in (2030 mm) minimum clear head room (see Fig. 8(a)). *If vertical clearance of an area adjoining an accessible route is reduced to less than 80 in (nominal dimension), a barrier to warn blind or visually-impaired persons shall be provided (see Fig. 8(c-1)).*

4.5 Ground and Floor Surfaces.

4.5.1* General. Ground and floor surfaces along accessible routes and in accessible rooms and spaces including floors, walks, ramps, stairs, and curb ramps, shall be stable, firm, slip-resistant, and shall comply with 4.5.

4.5.2 Changes in Level. Changes in level up to 1/4 in (6 mm) may be vertical and without edge treatment *(see Fig. 7(c))*. Changes in level between 1/4 in and 1/2 in (6 mm and 13 mm)

4.4 Protruding Objects

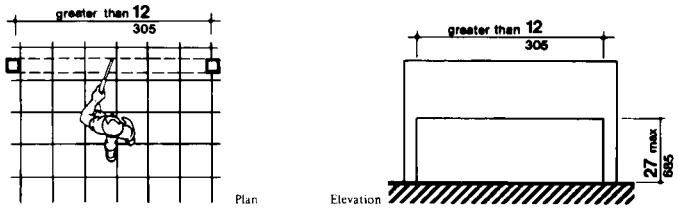

Fig. 8 (c) Free-Standing Overhanging Objects

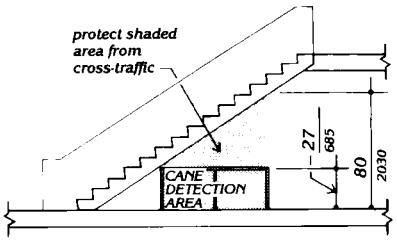

Fig. 8 (c-1) Overhead Hazards

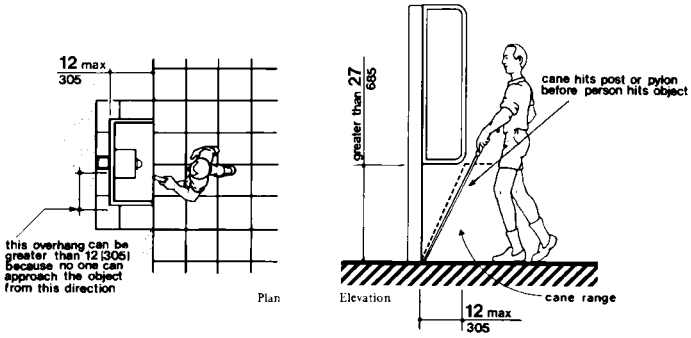

Fig. 8 (d)
Objects Mounted on Posts or Pylons

Fig. 8
Protruding Objects *(Continued)*

23

4.5 Ground and Floor Surfaces

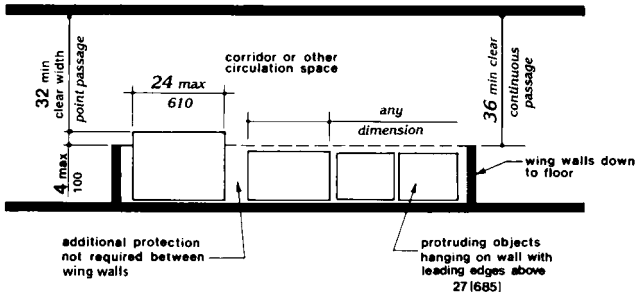

Fig. 8 (e)
Example of Protection around Wall-Mounted Objects and Measurements of Clear Widths

Fig. 8
Protruding Objects *(Continued)*

shall be beveled with a slope no greater than 1:2 *(see Fig. 7(d))*. Changes in level greater than 1/2 in (13 mm) shall be accomplished by means of a ramp that complies with 4.7 or 4.8.

4.5.3* Carpet. If carpet or carpet tile is used on a ground or floor surface, then it shall be securely attached; have a firm cushion, pad, or backing, or no cushion or pad; and have a level loop, textured loop, level cut pile, or level cut/uncut pile texture. The maximum pile *thickness* shall be 1/2 in (13 mm) (see Fig. 8(f)). Exposed edges of carpet shall be fastened to floor surfaces and have trim along the entire length of the exposed edge. Carpet edge trim shall comply with 4.5.2.

4.5.4 Gratings. If gratings are located in walking surfaces, then they shall have spaces no greater than 1/2 in (13 mm) wide in one direction *(see Fig. 8(g))*. If gratings have elongated openings, then they shall be placed so that the long dimension is perpendicular to the dominant direction of travel *(see Fig. 8(h))*.

4.6 Parking and Passenger Loading Zones.

4.6.1 Minimum Number. *Parking spaces required to be accessible by 4.1 shall comply with 4.6.2 through 4.6.5. Passenger loading zones required to be accessible by 4.1 shall comply with 4.6.5 and 4.6.6.*

4.6 Parking and Passenger Loading Zones

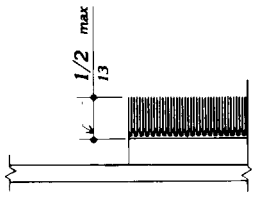

Fig. 8 (f)
Carpet Pile Thickness

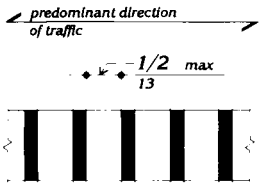

Fig. 8 (g)
Gratings

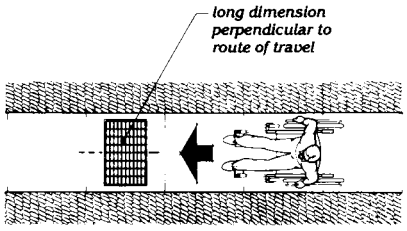

Fig. 8 (h)
Grating Orientation

4.6.2 Location. *Accessible parking spaces serving* a particular building shall be located on the shortest accessible route of travel *from adjacent parking* to an accessible entrance. *In parking facilities* that do not serve a particular building, *accessible parking* shall be located on the shortest accessible route *of travel* to an accessible pedestrian entrance of the parking facility. *In buildings with multiple accessible entrances with adjacent parking, accessible parking spaces shall be dispersed and located closest to the accessible entrances.*

4.6.3* Parking Spaces. *Accessible* parking spaces shall be at least 96 in (2440 mm) wide. Parking access aisles shall be part of an accessible route to the building or facility entrance and shall comply with 4.3. Two accessible parking spaces may share a common access aisle (see Fig. 9). Parked vehicle overhangs shall not reduce the clear width of an accessible route. *Parking spaces and access aisles shall be level with surface slopes not exceeding 1:50 (2%) in all directions.*

4.6.4* Signage. Accessible parking spaces shall be designated as reserved by a sign showing the symbol of accessibility (see 4.30.7). *Spaces complying with 4.1.2(5)(b) shall have an additional sign "Van-Accessible" mounted below the symbol of accessibility.* Such signs shall *be located so they cannot* be obscured by a vehicle parked in the space.

4.6.5* *Vertical Clearance.* *Provide minimum vertical clearance of 114 in (2895 mm) at accessible passenger loading zones and along at least one vehicle access route to such areas from site entrance(s) and exit(s). At parking spaces complying with 4.1.2(5)(b), provide minimum vertical clearance of 98 in (2490 mm) at the parking space and along at least one vehicle access route to such spaces from site entrance(s) and exit(s).*

4.6.6 Passenger Loading Zones. Passenger loading zones shall provide an access aisle at least *60* in *(1525 mm)* wide and 20 ft *(240 in) (6100 mm)* long adjacent and parallel to the vehicle pull-up space (see Fig. 10). If there are curbs between the access aisle and the vehicle pull-up space, then a curb ramp complying with 4.7 shall be provided. *Vehicle standing spaces and access aisles shall be level with*

4.7 Curb Ramps

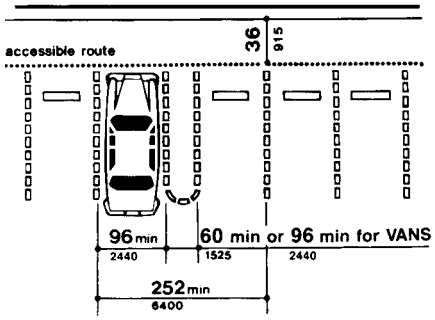

Fig. 9
Dimensions of Parking Spaces

surface slopes not exceeding 1:50 (2%) in all directions.

4.7 Curb Ramps.

4.7.1 Location. Curb ramps complying with 4.7 shall be provided wherever an accessible route crosses a curb.

4.7.2 Slope. Slopes of curb ramps shall comply with 4.8.2. The slope shall be measured as shown in Fig. 11. *Transitions from ramps to walks, gutters, or streets shall be flush and free of abrupt changes. Maximum slopes of adjoining gutters, road surface immediately adjacent to the curb ramp, or accessible route shall not exceed 1:20.*

4.7.3 Width. The minimum width of a curb ramp shall be 36 in (915 mm), exclusive of flared sides.

4.7.4 Surface. Surfaces of curb ramps shall comply with 4.5.

4.7.5 Sides of Curb Ramps. If a curb ramp is located where pedestrians must walk across the ramp, *or where it is not protected by handrails or guardrails*, it shall have flared sides; the maximum slope of the flare shall be 1:10 (see Fig. 12(a)). Curb ramps with returned curbs may be used where pedestrians would not normally walk across the ramp (see Fig. 12(b)).

4.7.6 Built-up Curb Ramps. Built-up curb ramps shall be located so that they do not project into vehicular traffic lanes (see Fig. 13).

4.7.7 *Detectable Warnings.* A curb ramp shall have a *detectable* warning complying with 4.29.2. *The detectable warning shall extend* the full width and depth of the curb ramp.

4.7.8 Obstructions. Curb ramps shall be located or protected to prevent their obstruction by parked vehicles.

4.7.9 Location at Marked Crossings. Curb ramps at marked crossings shall be wholly contained within the markings, excluding any flared sides (see Fig. 15).

4.7.10 Diagonal Curb Ramps. If diagonal (or corner type) curb ramps have returned curbs or other well-defined edges, such edges shall be parallel to the direction of pedestrian flow. The bottom of diagonal curb ramps shall have 48 in (1220 mm) minimum clear space as shown in Fig. 15(c) and (d). If diagonal curb ramps are provided at marked crossings, the 48 in (1220 mm) clear space shall be within the markings (see Fig. 15(c) and (d)). If diagonal curb ramps have flared sides, they shall also have at least a 24 in (610 mm) long segment of straight curb located on each side of the curb ramp and within the marked crossing (see Fig. 15(c)).

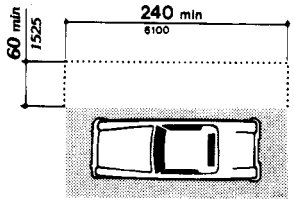

Fig. 10
Access Aisle at Passenger Loading Zones

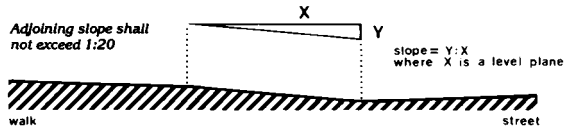

Fig. 11
Measurement of Curb Ramp Slopes

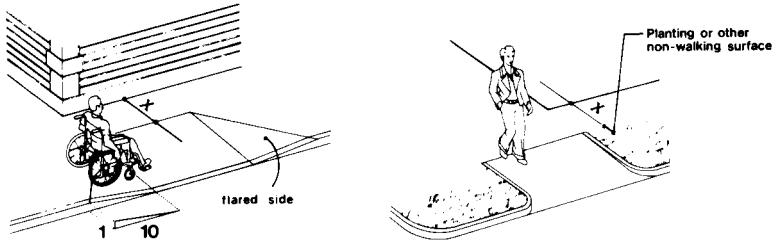

(a)
Flared Sides

(b)
Returned Curb

If X is less than 48 in, then the slope of the flared side shall not exceed 1:12.

Fig. 12
Sides of Curb Ramps

4.7.11 Islands. Any raised islands in crossings shall be cut through level with the street or have curb ramps at both sides and a level area at least 48 in (1220 mm) long between the curb ramps in the part of the island intersected by the crossings (see Fig. 15(a) and (b)).

4.8 Ramps.

4.8.1* General. Any part of an accessible route with a slope greater than 1:20 shall be considered a ramp and shall comply with 4.8.

4.8.2* Slope and Rise. The least possible slope shall be used for any ramp. The maximum slope of a ramp in new construction shall be 1:12. The maximum rise for any run shall be 30 in (760 mm) (see Fig. 16). Curb ramps and ramps to be constructed on existing sites or in existing buildings or facilities may have slopes and rises as *allowed in 4.1.6(3)(a)* if space limitations prohibit the use of a 1:12 slope or less.

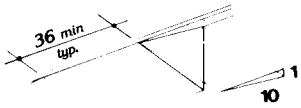

Fig. 13
Built-Up Curb Ramp

4.8 Ramps

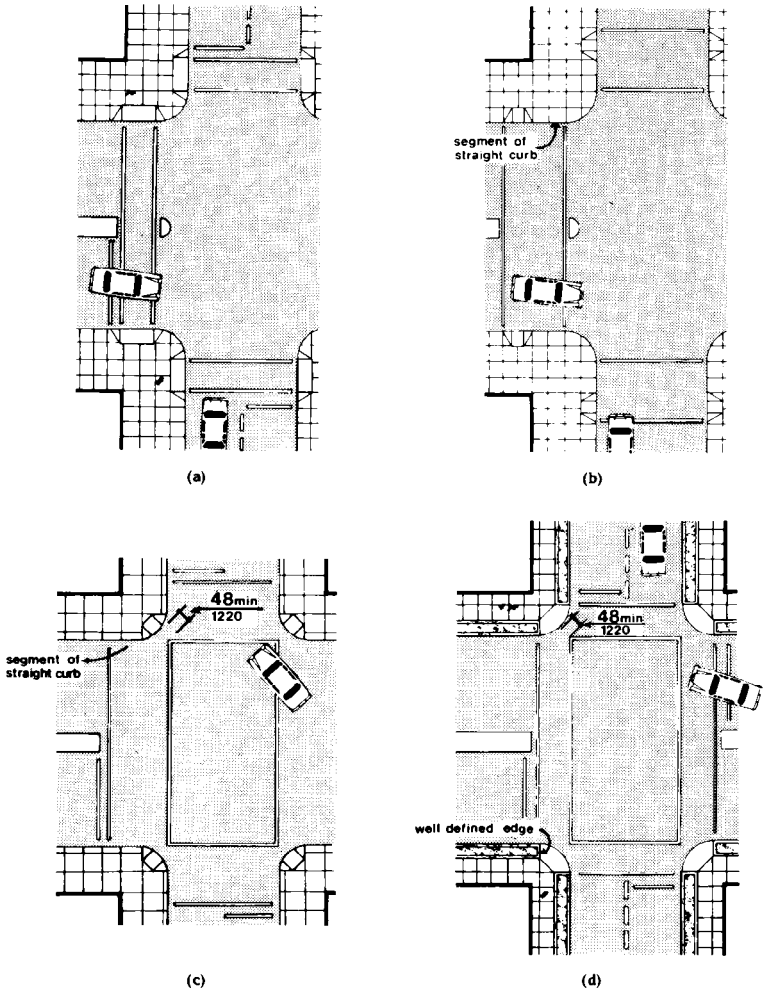

Fig. 15
Curb Ramps at Marked Crossings

28

4.8 Ramps

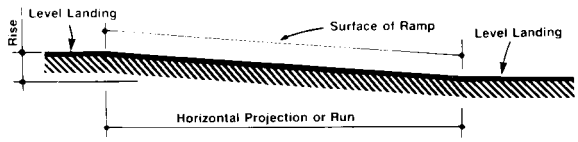

	Maximum Rise		Maximum Horizontal Projection	
Slope	in	mm	ft	m
1:12 to < 1:16	30	760	30	9
1:16 to < 1:20	30	760	40	12

Fig. 16
Components of a Single Ramp Run and Sample Ramp Dimensions

4.8.3 Clear Width. The minimum clear width of a ramp shall be 36 in (915 mm).

4.8.4* Landings. Ramps shall have level landings at bottom and top of *each ramp and* each *ramp* run. Landings shall have the following features:

(1) The landing shall be at least as wide as the ramp run leading to it.

(2) The landing length shall be a minimum of 60 in (1525 mm) clear.

(3) If ramps change direction at landings, the minimum landing size shall be 60 in by 60 in (1525 mm by 1525 mm).

(4) If a doorway is located at a landing, then the area in front of the doorway shall comply with 4.13.6.

4.8.5* Handrails. If a ramp run has a rise greater than 6 in (150 mm) or a horizontal projection greater than 72 in (1830 mm), then it shall have handrails on both sides. Handrails are not required on curb ramps *or adjacent to seating in assembly areas.* Handrails shall comply with 4.26 and shall have the following features:

(1) Handrails shall be provided along both sides of ramp segments. The inside handrail on switchback or dogleg ramps shall always be continuous.

(2) If handrails are not continuous, they shall extend at least 12 in (305 mm) beyond the top and bottom of the ramp segment and shall be parallel with the floor or ground surface (see Fig. 17).

(3) The clear space between the handrail and the wall shall be 1 - 1/2 in (38 mm).

(4) Gripping surfaces shall be continuous.

(5) Top of handrail gripping surfaces shall be mounted between 34 in and 38 in (865 mm and 965 mm) above ramp surfaces.

(6) Ends of handrails shall be either rounded or returned smoothly to floor, wall, or post.

(7) Handrails shall not rotate within their fittings.

4.8.6 Cross Slope and Surfaces. The cross slope of ramp surfaces shall be no greater than 1:50. Ramp surfaces shall comply with 4.5.

4.9 Stairs

4.8.7 Edge Protection. Ramps and landings with drop-offs shall have curbs, walls, railings, or projecting surfaces that prevent people from slipping off the ramp. Curbs shall be a minimum of 2 in (50 mm) high (see Fig. 17).

4.8.8 Outdoor Conditions. Outdoor ramps and their approaches shall be designed so that water will not accumulate on walking surfaces.

4.9 Stairs.

4.9.1* Minimum Number. *Stairs required to be accessible by 4.1 shall comply with 4.9.*

4.9.2 Treads and Risers. On any given flight of stairs, all steps shall have uniform riser heights and uniform tread widths. Stair treads shall be no less than 11 in (280 mm) wide, measured from riser to riser (see Fig. 18(a)). *Open risers are not permitted.*

4.9.3 Nosings. The undersides of nosings shall not be abrupt. The radius of curvature at the leading edge of the tread shall be no greater than 1/2 in (13 mm). Risers shall be sloped or the underside of the nosing shall have an angle not less than 60 degrees from the horizontal. Nosings shall project no more than 1-1/2 in (38 mm) (see Fig. 18).

4.9.4 Handrails. Stairways shall have handrails at both sides of all stairs. Handrails shall comply with 4.26 and shall have the following features:

(1) Handrails shall be continuous along both sides of stairs. The inside handrail on switchback or dogleg stairs shall always be continuous (see Fig. 19(a) and (b)).

(2) If handrails are not continuous, they shall extend at least 12 in (305 mm) beyond the top riser and at least 12 in (305 mm) plus the width of one tread beyond the bottom riser. At the top, the extension shall be parallel with the floor or ground surface. At the bottom, the handrail shall continue to slope for a distance of the width of one tread from the bottom riser; the remainder of the extension shall be horizontal (see Fig. 19(c) and (d)). Handrail extensions shall comply with 4.4.

(3) The clear space between handrails and wall shall be 1-1/2 in (38 mm).

(4) Gripping surfaces shall be uninterrupted by newel posts, other construction elements, or obstructions.

(5) Top of handrail gripping surface shall be mounted between 34 in and 38 in (865 mm and 965 mm) above stair nosings.

(6) Ends of handrails shall be either rounded or returned smoothly to floor, wall or post.

(7) Handrails shall not rotate within their fittings.

4.9.5 *Detectable* Warnings at Stairs. *(Reserved).*

4.9.6 Outdoor Conditions. Outdoor stairs and their approaches shall be designed so that water will not accumulate on walking surfaces.

4.10 Elevators.

4.10.1 General. *Accessible* elevators shall be on an accessible route and shall comply with 4.10 and with the *ASME A17.1-1990*, Safety Code for Elevators and Escalators. *Freight elevators shall not be considered as meeting the requirements of this section unless the only elevators provided are used as combination passenger and freight elevators for the public and employees.*

4.10.2 Automatic Operation. Elevator operation shall be automatic. Each car shall be equipped with a self-leveling feature that will automatically bring the car to floor landings within a tolerance of 1/2 in (13 mm) under rated loading to zero loading conditions. This self-leveling feature shall be automatic and independent of the operating device and shall correct the overtravel or undertravel.

4.10.3 Hall Call Buttons. Call buttons in elevator lobbies and halls shall be centered at 42 in (1065 mm) above the floor. Such call buttons shall have visual signals to indicate when each call is registered and when each call is answered. Call buttons shall be a minimum of 3/4 in (19 mm) in the smallest dimension. The button designating the up direction shall be on top. (See Fig. 20.) *Buttons shall be raised or flush. Objects mounted beneath hall call buttons shall not project into the elevator lobby more than 4 in (100 mm).*

4.10 Elevators

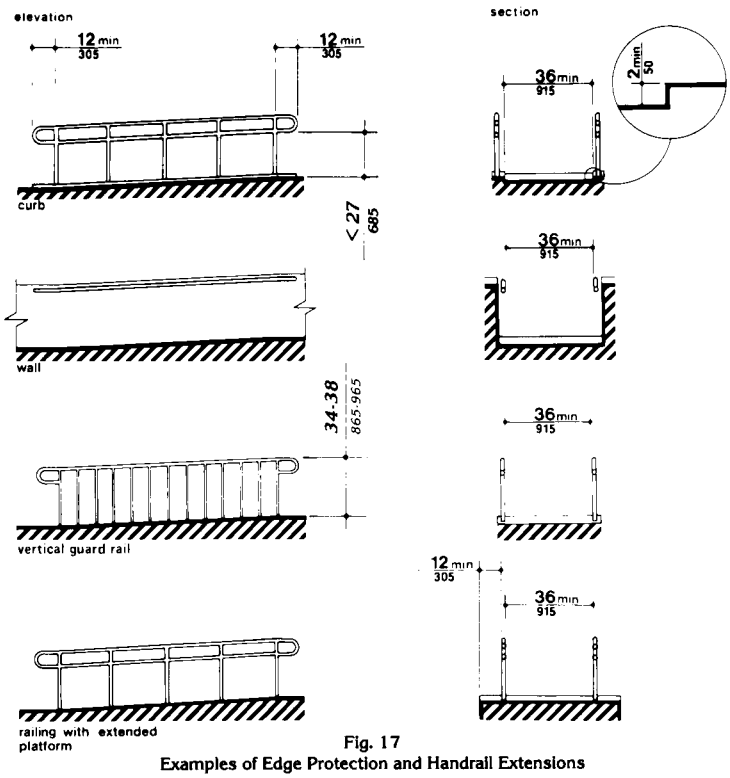

Fig. 17
Examples of Edge Protection and Handrail Extensions

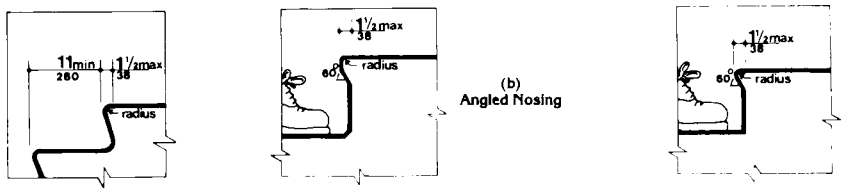

(a)
Flush Riser

(b)
Angled Nosing

(c)
Rounded Nosing

Fig. 18
Usable Tread Width and Examples of Acceptable Nosings

31

4.10 Elevators

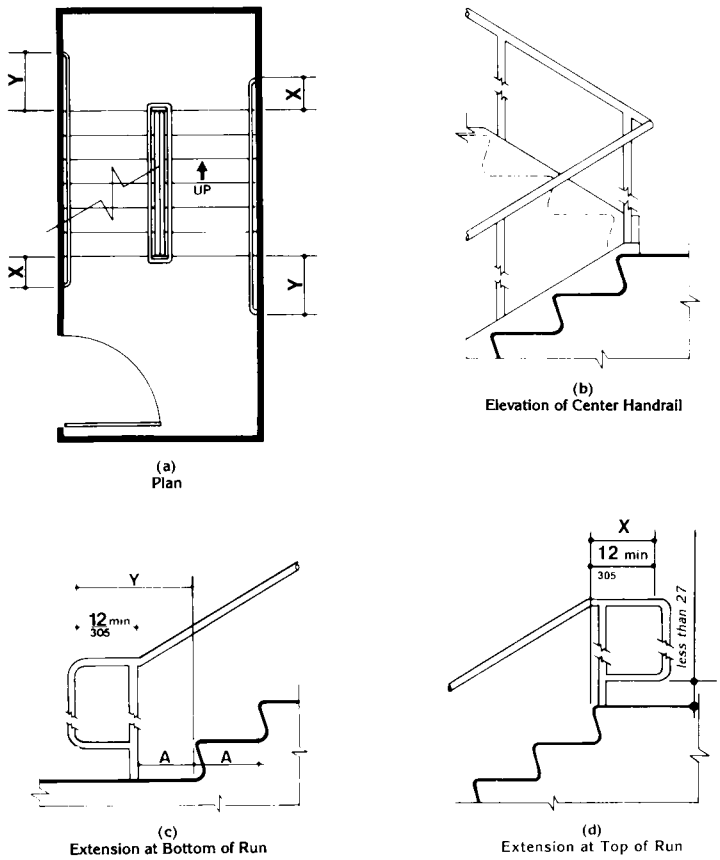

NOTE:

X is the 12 in minimum handrail extension required at each top riser.

Y is the minimum handrail extension of 12 in plus the width of one tread that is required at each bottom riser.

Fig. 19
Stair Handrails

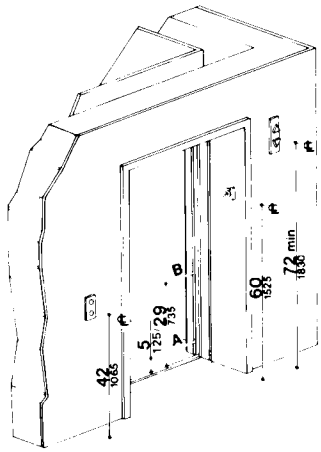

NOTE: The automatic door reopening device is activated if an object passes through either line A or line B. Line A and line B represent the vertical locations of the door reopening device not requiring contact.

Fig. 20
Hoistway and Elevator Entrances

4.10.4 Hall Lanterns. A visible and audible signal shall be provided at each hoistway entrance to indicate which car is answering a call. Audible signals shall sound once for the up direction and twice for the down direction or shall have verbal annunciators that say "up" or "down." Visible signals shall have the following features:

(1) Hall lantern fixtures shall be mounted so that their centerline is at least 72 in (1830 mm) above the lobby floor. (See Fig. 20.)

(2) Visual elements shall be at least 2-1/2 in (64 mm) in the smallest dimension.

(3) Signals shall be visible from the vicinity of the hall call button (see Fig. 20). In-car lanterns located in cars, visible from the vicinity of hall call buttons, and conforming to the above requirements, shall be acceptable.

4.10.5 *Raised and Braille* Characters on Hoistway Entrances. All elevator hoistway entrances shall have *raised and Braille* floor designations provided on both jambs. The centerline of the characters shall be 60 in (1525 mm) *above finish* floor. Such characters shall be 2 in (50 mm) high and shall comply with 4.30.4. Permanently applied plates are acceptable if they are permanently fixed to the jambs. (See Fig. 20).

4.10.6* Door Protective and Reopening Device. Elevator doors shall open and close automatically. They shall be provided with a reopening device that will stop and reopen a car door and hoistway door automatically if the door becomes obstructed by an object or person. The device shall be capable of completing these operations without requiring contact for an obstruction passing through the opening at heights of 5 in and 29 in (125 mm and 735 mm) above finish floor (see Fig. 20). Door reopening devices shall remain effective for at least 20 seconds. After such an interval, doors may close in accordance with the requirements of *ASME A17.1-1990.*

4.10.7* Door and Signal Timing for Hall Calls. The minimum acceptable time from notification that a car is answering a call until the doors of that car start to close shall be calculated from the following equation:

$$T = D/(1.5\ ft/s) \text{ or } T = D/(445\ mm/s)$$

where T total time in seconds and D distance (in feet or millimeters) from a point in the lobby or corridor 60 in (1525 mm) directly in front of the farthest call button controlling that car to the centerline of its hoistway door (see Fig. 21). For cars with in-car lanterns, T begins when the lantern is visible from the vicinity of hall call buttons and an audible signal is sounded. *The minimum acceptable notification time shall be 5 seconds.*

4.10.8 Door Delay for Car Calls. The minimum time for elevator doors to remain fully open in response to a car call shall be 3 seconds.

4.10.9 Floor Plan of Elevator Cars. The floor area of elevator cars shall provide space for wheelchair users to enter the car, maneuver

4.10.12 Car Controls

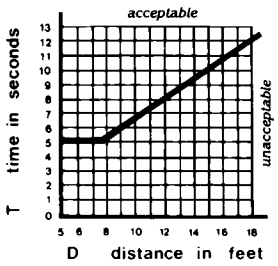

Fig. 21
Graph of Timing Equation

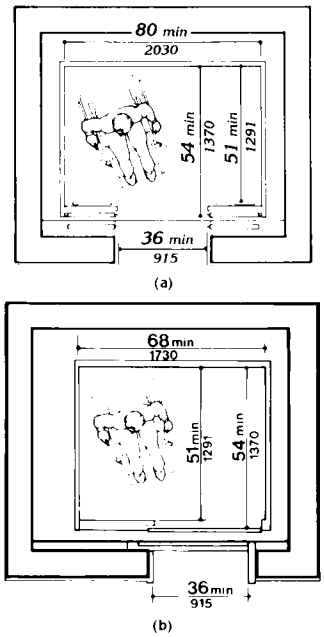

Fig. 22
Minimum Dimensions of Elevator Cars

within reach of controls, and exit from the car. Acceptable door opening and inside dimensions shall be as shown in Fig. 22. The clearance between the car platform sill and the edge of any hoistway landing shall be no greater than 1-1/4 in (32 mm).

4.10.10 Floor Surfaces. Floor surfaces shall comply with 4.5.

4.10.11 Illumination Levels. The level of illumination at the car controls, platform, and car threshold and landing sill shall be at least 5 footcandles (53.8 lux).

4.10.12* Car Controls. Elevator control panels shall have the following features:

(1) Buttons. All control buttons shall be at least 3/4 in (19 mm) in their smallest dimension. They *shall* be *raised* or flush.

(2) Tactile, *Braille*, and Visual Control Indicators. All control buttons shall be designated by *Braille and by raised* standard alphabet characters for letters, arabic characters for numerals, or standard symbols as shown in Fig. 23(a), and as required in *ASME A17.1-1990. Raised and Braille* characters and symbols shall comply with 4.30. The call button for the main entry floor shall be designated by a *raised* star at the left of the floor designation (see Fig. 23(a)). All raised designations for control buttons shall be placed immediately to the left of the button to which they apply. Applied plates, permanently attached, are an acceptable means to provide raised control designations. Floor buttons shall be provided with visual indicators to show when each call is registered. The visual indicators shall be extinguished when each call is answered.

(3) Height. All floor buttons shall be no higher than 54 in (1370 mm) above the *finish floor for side approach and 48 in (1220 mm) for front approach.* Emergency controls, including the emergency alarm and emergency stop, shall be grouped at the bottom of the panel and shall have their centerlines no less than 35 in (890 mm) above the finish floor (see Fig. 23(a) and (b)).

4.10.13* Car Position Indicators

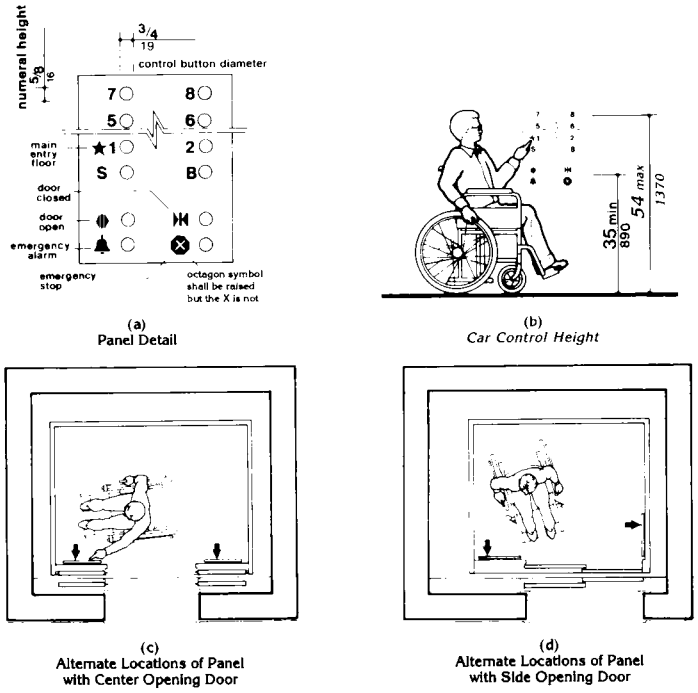

(a)
Panel Detail

(b)
Car Control Height

(c)
Alternate Locations of Panel with Center Opening Door

(d)
Alternate Locations of Panel with Side Opening Door

Fig. 23
Car Controls

(4) Location. Controls shall be located on a front wall if cars have center opening doors, and at the side wall or at the front wall next to the door if cars have side opening doors (see Fig. 23(c) and (d)).

4.10.13* Car Position Indicators. In elevator cars, a visual car position indicator shall be provided above the car control panel or over the door to show the position of the elevator in the hoistway. As the car passes or stops at a floor served by the elevators, the corresponding numerals shall illuminate, and an audible signal shall sound. Numerals shall be a minimum of 1/2 in (13 mm) high. The audible signal shall be no less than 20 decibels with a frequency no higher than 1500 Hz. An automatic verbal announcement of the floor number at which a car stops or which a car passes may be substituted for the audible signal.

4.10.14* Emergency Communications. If provided, emergency two-way communication systems between the elevator and a point outside the hoistway shall comply with *ASME*

A17.1-1990. The highest operable part of a two-way communication system shall be a maximum of *48 in (1220 mm)* from the floor of the car. It shall be identified by a raised symbol and lettering complying with 4.30 and located adjacent to the device. If the system uses a handset then the length of the cord from the panel to the handset shall be at least 29 in (735 mm). *If the system is located in a closed compartment the compartment door hardware shall conform to 4.27, Controls and Operating Mechanisms. The emergency intercommunication system shall not require voice communication.*

4.11 Platform Lifts *(Wheelchair Lifts).*

4.11.1 Location. *Platform lifts (wheelchair lifts) permitted by 4.1 shall comply with the requirements of 4.11.*

4.11.2* Other Requirements. If platform lifts *(wheelchair lifts)* are used, they shall comply with 4.2.4, 4.5, 4.27, and *ASME A17.1 Safety Code for Elevators and Escalators, Section XX, 1990.*

4.11.3 Entrance. *If platform lifts are used then they shall facilitate unassisted entry, operation, and exit from the lift in compliance with 4.11.2.*

4.12 Windows.

4.12.1* General. *(Reserved).*

4.12.2* Window Hardware. *(Reserved).*

4.13 Doors.

4.13.1 General. *Doors required to be accessible by 4.1* shall comply with the requirements of 4.13.

4.13.2 Revolving Doors and Turnstiles. Revolving doors or turnstiles shall not be the only means of passage at an accessible entrance or along an accessible route. *An accessible gate or door shall be provided adjacent to the turnstile or revolving door and shall be so designed as to facilitate the same use pattern.*

4.13.3 Gates. Gates, including ticket gates, shall meet all applicable specifications of 4.13.

4.13.4 Double-Leaf Doorways. If doorways have two *independently operated* door leaves, then at least one leaf shall meet the specifications in 4.13.5 and 4.13.6. That leaf shall be an active leaf.

4.13.5 Clear Width. Doorways shall have a minimum clear opening of 32 in (815 mm) with the door open 90 degrees, measured between the face of the door and the *opposite* stop (see Fig. 24(a), (b), (c), and (d)). Openings more than 24 in (610 mm) in depth shall comply with 4.2.1 and 4.3.3 (see Fig. 24(e)).

EXCEPTION: Doors not requiring full user passage, such as shallow closets, may have the clear opening reduced to 20 in (510 mm) minimum.

4.13.6 Maneuvering Clearances at Doors. Minimum maneuvering clearances at doors that are not automatic or power-assisted shall be as shown in Fig. 25. The floor or ground area within the required clearances shall be level and clear.

EXCEPTION: Entry doors to acute care hospital bedrooms for in-patients shall be exempted from the requirement for space at the latch side of the door (see dimension "x" in Fig. 25) if the door is at least 44 in (1120 mm) wide.

4.13.7 Two Doors in Series. The minimum space between two hinged or pivoted doors in series shall be 48 in (1220 mm) plus the width of any door swinging into the space. Doors in series shall swing either in the same direction or away from the space between the doors (see Fig. 26).

4.13.8* Thresholds at Doorways. Thresholds at doorways shall not exceed 3/4 in (19 mm) in height for exterior sliding doors or 1/2 in (13 mm) for other types of doors. Raised thresholds and floor level changes at accessible doorways shall be beveled with a slope no greater than 1:2 (see 4.5.2).

4.13.9* Door Hardware. Handles, pulls, latches, locks, and other operating devices on accessible doors shall have a shape that is easy

4.13 Doors

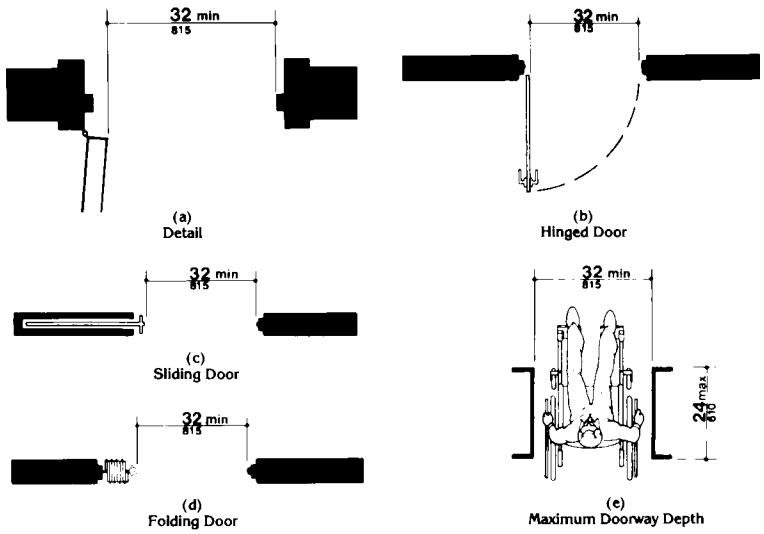

Fig. 24
Clear Doorway Width and Depth

to grasp with one hand and does not require tight grasping, tight pinching, or twisting of the wrist to operate. Lever-operated mechanisms, push-type mechanisms, and U-shaped handles are acceptable designs. When sliding doors are fully open, operating hardware shall be exposed and usable from both sides. *Hardware required for accessible door passage shall be mounted no higher than 48 in (1220 mm) above finished floor.*

4.13.10* Door Closers. If a door has a closer, then the sweep period of the closer shall be adjusted so that from an open position of 70 degrees, the door will take at least 3 seconds to move to a point 3 in (75 mm) from the latch, measured to the leading edge of the door.

4.13.11* Door Opening Force. The maximum force for pushing or pulling open a door shall be as follows:

(1) Fire doors shall have the minimum opening force allowable by the appropriate administrative authority.

(2) Other doors.

(a) exterior hinged doors: *(Reserved).*

(b) interior hinged doors: 5 lbf (22.2N)

(c) sliding or folding doors: 5 lbf (22.2N)

These forces do not apply to the force required to retract latch bolts or disengage other devices that may hold the door in a closed position.

4.13 Doors

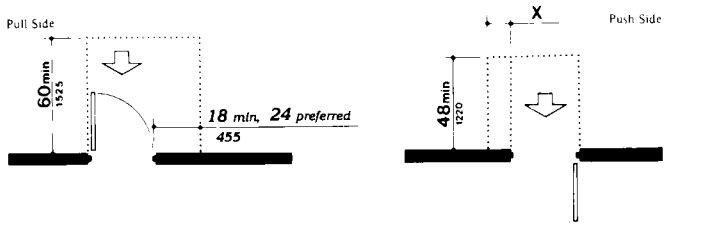

NOTE: x = 12 in (305 mm) if door has both a closer and latch.

(a)
Front Approaches — Swinging Doors

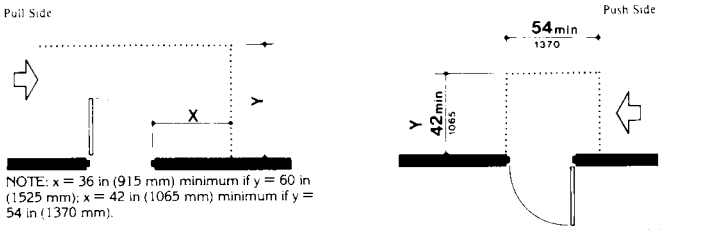

NOTE: x = 36 in (915 mm) minimum if y = 60 in (1525 mm); x = 42 in (1065 mm) minimum if y = 54 in (1370 mm).

NOTE: y = 48 in (1220 mm) minimum if door has both a latch and closer.

(b)
Hinge Side Approaches — Swinging Doors

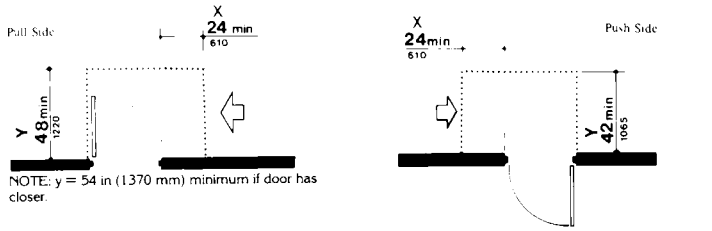

NOTE: y = 54 in (1370 mm) minimum if door has closer.

NOTE: y = 48 in (1220 mm) minimum if door has closer.

(c)
Latch Side Approaches — Swinging Doors

NOTE: All doors in alcoves shall comply with the clearances for front approaches.

Fig. 25
Maneuvering Clearances at Doors

4.13 Doors

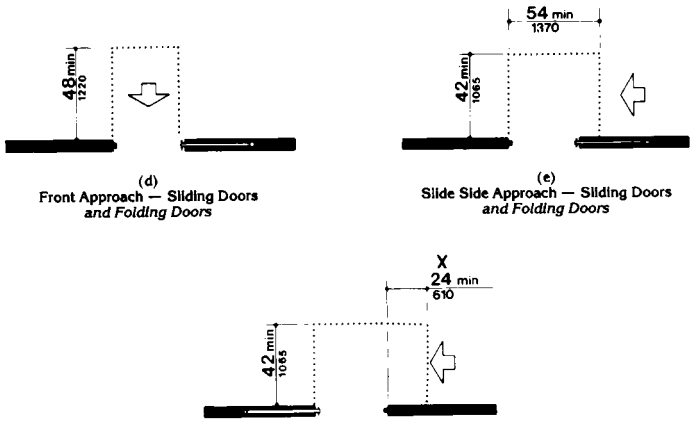

(d)
Front Approach — Sliding Doors *and Folding Doors*

(e)
Slide Side Approach — Sliding Doors *and Folding Doors*

(f)
Latch Side Approach — Sliding Doors *and Folding Doors*

NOTE: All doors in alcoves shall comply with the clearances for front approaches.

Fig. 25
Maneuvering Clearances at Doors *(Continued)*

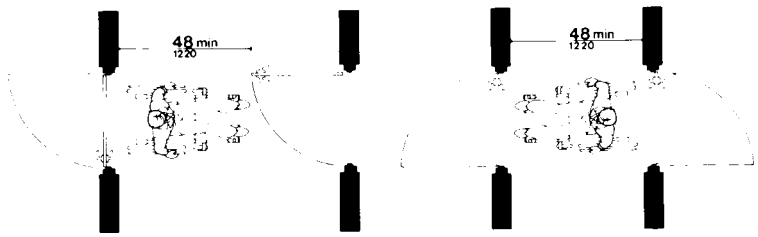

Fig. 26
Two Hinged Doors in Series

4.14 Entrances

4.13.12* Automatic Doors and Power-Assisted Doors. If an automatic door is used, then it shall comply with *ANSI/BHMA A156.10-1985*. Slowly opening, low-powered, automatic doors shall *comply with ANSI A156.19-1984*. Such doors shall not open to back check faster than 3 seconds and shall require no more than 15 lbf (66.6N) to stop door movement. If a power-assisted door is used, its door-opening force shall comply with 4.13.11 and its closing shall conform to the requirements in *ANSI A156.19-1984*.

4.14 Entrances.

4.14.1 Minimum Number. *Entrances required to be accessible by 4.1* shall be part of an accessible route complying with 4.3. Such entrances shall be connected by an accessible route to public transportation stops, to accessible parking and passenger loading zones, and to public streets or sidewalks if available (see 4.3.2(1)). They shall also be connected by an accessible route to all accessible spaces or elements within the building or facility.

4.14.2 Service Entrances. A service entrance shall not be the sole accessible entrance unless it is the only entrance to a building or facility (for example, in a factory or garage).

4.15 Drinking Fountains and Water Coolers.

4.15.1 Minimum Number. *Drinking fountains or water coolers required to be accessible by 4.1* shall comply with 4.15.

4.15.2* Spout Height. Spouts shall be no higher than 36 in (915 mm), measured from the floor or ground surfaces to the spout outlet (see Fig. 27(a)).

4.15.3 Spout Location. The spouts of drinking fountains and water coolers shall be at the front of the unit and shall direct the water flow in a trajectory that is parallel or nearly parallel to the front of the unit. The spout shall provide a flow of water at least 4 in (100 mm) high so as to allow the insertion of a cup or glass under the flow of water. *On an accessible drinking fountain with a round or oval bowl, the spout must be positioned so the flow of water is within 3 in (75 mm) of the front edge of the fountain.*

4.15.4 Controls. Controls shall comply with 4.27.4. *Unit controls shall be front mounted or side mounted near the front edge.*

4.15.5 Clearances.

(1) Wall- and post-mounted cantilevered units shall have a clear knee space between the bottom of the apron and the floor or ground at least 27 in (685 mm) high, 30 in (760 mm) wide, and 17 in to 19 in (430 mm to 485 mm) deep (see Fig. 27(a) and (b)). Such units shall also have a minimum clear floor space 30 in by 48 in (760 mm by 1220 mm) to allow a person in a wheelchair to approach the unit facing forward.

(2) Free-standing or built-in units not having a clear space under them shall have a clear floor space at least 30 in by 48 in (760 mm by 1220 mm) that allows a person in a wheelchair to make a parallel approach to the unit (see Fig. 27(c) and (d)). This clear floor space shall comply with 4.2.4.

4.16 Water Closets.

4.16.1 General. Accessible water closets shall comply with 4.16.

4.16.2 Clear Floor Space. Clear floor space for water closets not in stalls shall comply with Fig. 28. Clear floor space may be arranged to allow either a left-handed or right-handed approach.

4.16.3* Height. The height of water closets shall be 17 in to 19 in (430 mm to 485 mm), measured to the top of the toilet seat (see Fig. 29(b)). *Seats shall not be sprung to return to a lifted position.*

4.16.4* Grab Bars. Grab bars for water closets not located in stalls shall comply with 4.26 and Fig. 29. *The grab bar behind the water closet shall be 36 in (915 mm) minimum.*

4.16.5* Flush Controls. Flush controls shall be hand operated *or automatic* and shall comply with 4.27.4. Controls for flush valves

shall be mounted on the wide side of toilet areas no more than 44 in (1120 mm) above the floor.

4.16.6 Dispensers. Toilet paper dispensers shall be installed within reach, as shown in Fig. 29(b). *Dispensers that control delivery, or that do not permit continuous paper flow, shall not be used.*

4.17 Toilet Stalls.

4.17.1 Location. Accessible toilet stalls shall be on an accessible route and shall meet the requirements of 4.17.

4.17.2 Water Closets. Water closets in accessible stalls shall comply with 4.16.

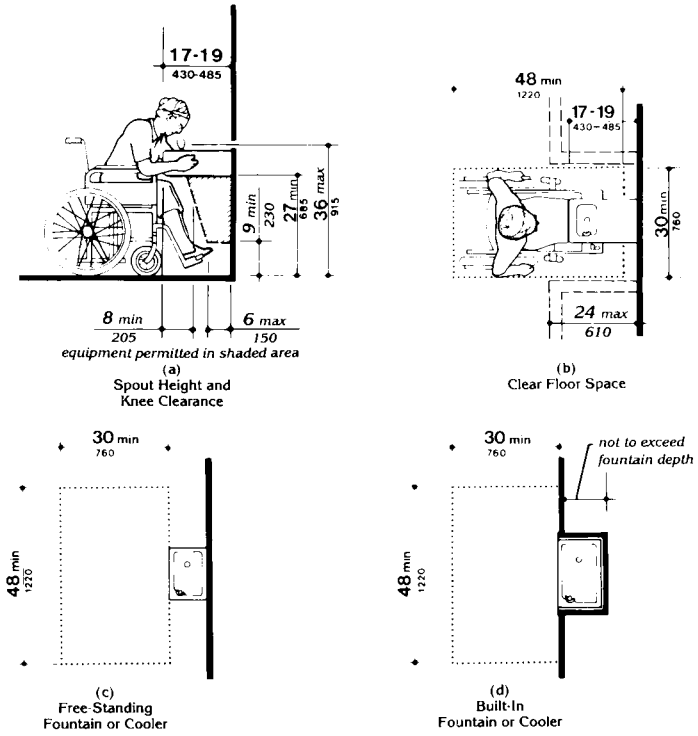

Fig. 27
Drinking Fountains and Water Coolers

4.17 Toilet Stalls

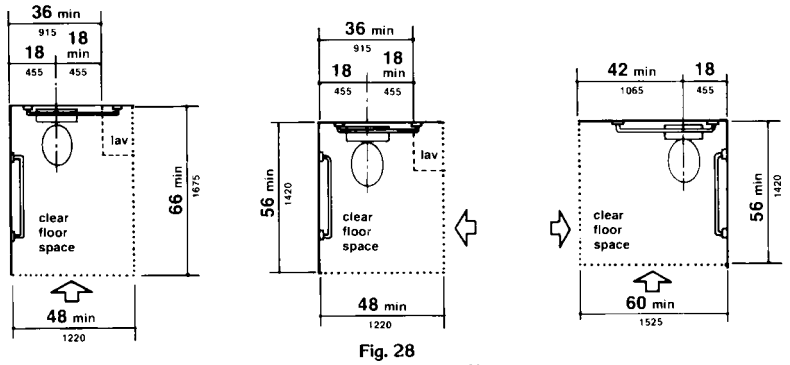

Fig. 28
Clear Floor Space at Water Closets

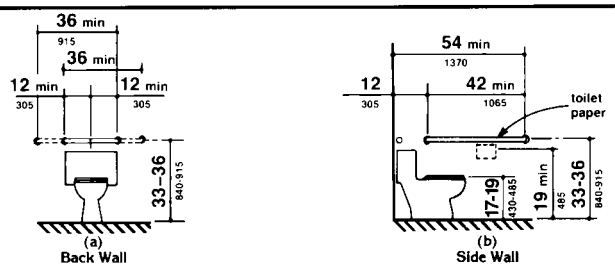

Fig. 29
Grab Bars at Water Closets

4.17.3* Size and Arrangement. The size and arrangement of the standard toilet stall shall comply with Fig. 30(a), *Standard Stall.* Standard toilet stalls with a minimum depth of 56 in (1420 mm) (see Fig. 30(a)) shall have wall-mounted water closets. If the depth of a standard toilet stall is increased at least 3 in (75 mm), then a floor-mounted water closet may be used. Arrangements shown for standard toilet stalls may be reversed to allow either a left- or right-hand approach. Additional stalls shall be provided in conformance with 4.22.4.

EXCEPTION: In instances of alteration work where provision of a standard stall (Fig. 30(a)) is technically infeasible or where plumbing code requirements prevent combining existing stalls to provide space, either alternate stall (Fig. 30(b)) may be provided in lieu of the standard stall.

4.17.4 Toe Clearances. In standard stalls, the front partition and at least one side partition shall provide a toe clearance of at least 9 in (230 mm) above the floor. If the depth of the stall is greater than 60 in (1525 mm), then the toe clearance is not required.

4.17.5* Doors. Toilet stall doors, *including door hardware,* shall comply with 4.13. *If toilet stall approach is from the latch side of the stall door, clearance between the door side of the*

4.17 Toilet Stalls

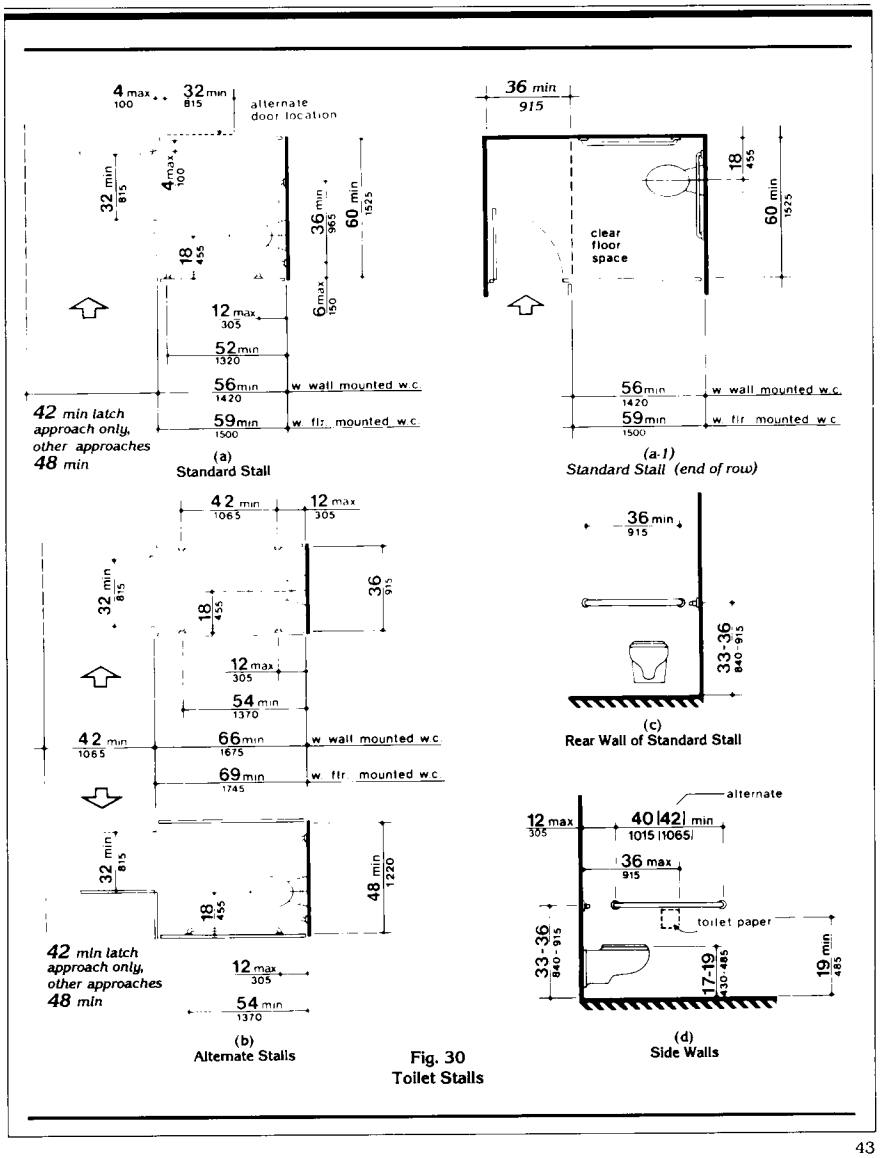

Fig. 30
Toilet Stalls

43

4.19 Lavatories and Mirrors

stall and any obstruction may be reduced to a minimum of 42 in (1065 mm) (Fig. 30).

4.17.6 Grab Bars. Grab bars complying with the length and positioning shown in Fig. 30(a), (b), (c), and (d) shall be provided. Grab bars may be mounted with any desired method as long as they have a gripping surface at the locations shown and do not obstruct the required clear floor area. Grab bars shall comply with 4.26.

4.18 Urinals.

4.18.1 General. Accessible urinals shall comply with 4.18.

4.18.2 Height. Urinals shall be stall-type or wall-hung with an elongated rim at a maximum of 17 in (430 mm) above the finish floor.

4.18.3 Clear Floor Space. A clear floor space 30 in by 48 in (760 mm by 1220 mm) shall be provided in front of urinals to allow forward approach. This clear space shall adjoin or overlap an accessible route and shall comply with 4.2.4. *Urinal shields that do not extend beyond the front edge of the urinal rim may be provided with 29 in (735 mm) clearance between them.*

4.18.4 Flush Controls. Flush controls shall be hand operated or automatic, and shall comply with 4.27.4, and shall be mounted no more than 44 in (1120 mm) above the finish floor.

4.19 Lavatories and Mirrors.

4.19.1 General. The requirements of 4.19 shall apply to lavatory fixtures, vanities, and built-in lavatories.

4.19.2 Height and Clearances. Lavatories shall be mounted with *the rim or counter surface no higher than 34 in (865 mm) above the finish floor.* Provide a clearance of at least 29 in (735 mm) above the finish floor to the bottom of the apron. Knee and toe clearance shall comply with Fig. 31.

4.19.3 Clear Floor Space. A clear floor space 30 in by 48 in (760 mm by 1220 mm) complying with 4.2.4 shall be provided in front of a lavatory to allow forward approach. Such clear floor space shall adjoin or overlap an accessible route and shall extend a maximum of 19 in (485 mm) underneath the lavatory (see Fig. 32).

4.19.4 Exposed Pipes and Surfaces. Hot water and drain pipes under lavatories shall be insulated or otherwise *configured to protect against contact.* There shall be no sharp or abrasive surfaces under lavatories.

4.19.5 Faucets. Faucets shall comply with 4.27.4. Lever-operated, push-type, and electronically controlled mechanisms are examples of acceptable designs. *If* self-closing valves are

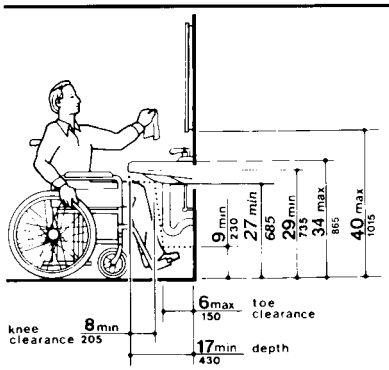

Fig. 31
Lavatory Clearances

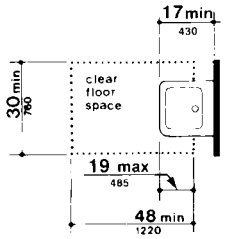

Fig. 32
Clear Floor Space at Lavatories

used the faucet *shall remain* open for at least 10 seconds.

4.19.6* Mirrors. Mirrors shall be mounted with the bottom edge *of the reflecting surface* no higher than 40 in (1015 mm) *above the finish* floor (see Fig. 31).

4.20 Bathtubs.

4.20.1 General. Accessible bathtubs shall comply with 4.20.

4.20.2 Floor Space. Clear floor space in front of bathtubs shall be as shown in Fig. 33.

4.20.3 Seat. An in-tub seat or a seat at the head end of the tub shall be provided as shown in Fig. 33 and 34. The structural strength of seats and their attachments shall comply with 4.26.3. Seats shall be mounted securely and shall not slip during use.

4.20.4 Grab Bars. Grab bars complying with 4.26 shall be provided as shown in Fig. 33 and 34.

4.20.5 Controls. Faucets and other controls complying with 4.27.4 shall be located as shown in Fig. 34.

4.20.6 Shower Unit. A shower spray unit with a hose at least 60 in (1525 mm) long that can be used *both* as a fixed shower head *and* as a hand-held shower shall be provided.

4.20.7 Bathtub Enclosures. If provided, enclosures for bathtubs shall not obstruct controls or transfer from wheelchairs onto bathtub seats or into tubs. Enclosures on bathtubs shall not have tracks mounted on their rims.

4.21 Shower Stalls.

4.21.1* General. Accessible shower stalls shall comply with 4.21.

4.21.2 Size and Clearances. Except as specified in 9.1.2, shower stall size and clear floor space shall comply with Fig. 35(a) or (b). The shower stall in Fig. 35(a) shall be 36 in by 36 in (915 mm by 915 mm). Shower stalls required by 9.1.2 shall comply with Fig. 57(a) or (b). The shower stall in Fig. 35(b) will fit into the space required for a bathtub.

4.21.3 Seat. A seat shall be provided in shower stalls 36 in by 36 in (915 mm by 915 mm) and shall be as shown in Fig. 36. The seat shall be mounted 17 in to 19 in (430 mm to 485 mm) from the bathroom floor and shall extend the full depth of the stall. In a 36 in by 36 in (915 mm by 915 mm) shower stall, the seat shall be on the wall opposite the controls. *Where a fixed seat is provided in a 30 in by 60 in minimum (760 mm by 1525 mm) shower stall, it shall be a folding type and shall be mounted on the wall adjacent to the controls as shown in Fig. 57.* The structural strength of seats and their attachments shall comply with 4.26.3.

4.21.4 Grab Bars. Grab bars complying with 4.26 shall be provided as shown in Fig. 37.

4.21.5 Controls. Faucets and other controls complying with 4.27.4 shall be located as shown in Fig. 37. In shower stalls 36 in by 36 in (915 mm by 915 mm), all controls, faucets, and the shower unit shall be mounted on the side wall opposite the seat.

4.21.6 Shower Unit. A shower spray unit with a hose at least 60 in (1525 mm) long that can be used *both* as a fixed shower head *and* as a hand-held shower shall be provided.

EXCEPTION: In unmonitored facilities where vandalism is a consideration, a fixed shower head mounted at 48 in (1220 mm) above the shower floor may be used in lieu of a hand-held shower head.

4.21.7 Curbs. If provided, curbs in shower stalls 36 in by 36 in (915 mm by 915 mm) shall be no higher than *1/2 in (13 mm).* Shower stalls that are 30 in by 60 in (760 mm by 1525 mm) minimum shall not have curbs.

4.21.8 Shower Enclosures. If provided, enclosures for shower stalls shall not obstruct controls or obstruct transfer from wheelchairs onto shower seats.

4.22 Toilet Rooms.

4.22.1 Minimum Number. *Toilet facilities required to be accessible by 4.1 shall comply*

4.21 Shower Stalls

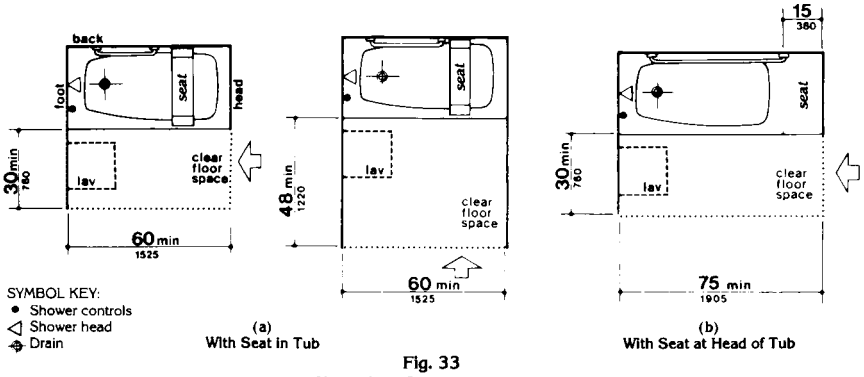

(a)
With Seat in Tub

(b)
With Seat at Head of Tub

Fig. 33
Clear Floor Space at Bathtubs

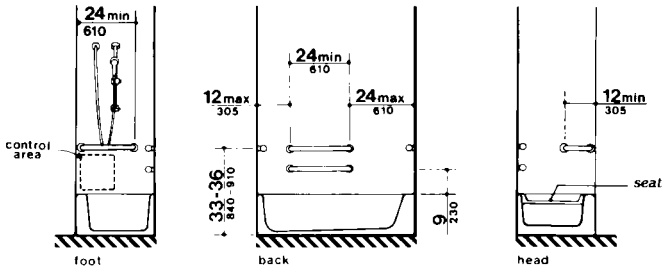

(a)
With Seat in Tub

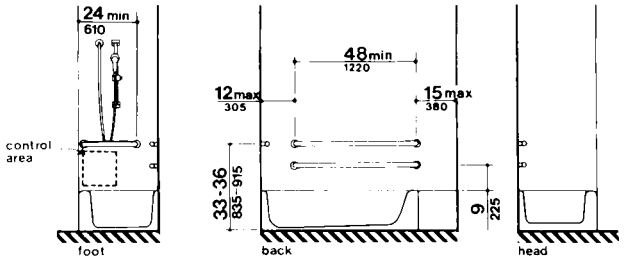

(b)
With Seat at Head of Tub

Fig. 34
Grab Bars at Bathtubs

46

4.22 Toilet Rooms

with 4.22. Accessible toilet rooms shall be on an accessible route.

4.22.2 Doors. All doors to accessible toilet rooms shall comply with 4.13. Doors shall not swing into the clear floor space required for any fixture.

4.22.3* Clear Floor Space. The accessible fixtures and controls required in 4.22.4, 4.22.5, 4.22.6, and 4.22.7 shall be on an accessible route. An unobstructed turning space complying with 4.2.3 shall be provided within an accessible toilet room. The clear floor space at fixtures and controls, the accessible route, and the turning space may overlap.

4.22.4 Water Closets. If toilet stalls are provided, then at least one shall be a standard toilet stall complying with 4.17; *where 6 or more stalls are provided, in addition to the stall complying with 4.17.3, at least one stall 36 in (915 mm) wide with an outward swinging, self-closing door and parallel grab bars complying with Fig. 30(d) and 4.26 shall be provided. Water closets in such stalls* shall comply with 4.16. If water closets are not in stalls, then at least one shall comply with 4.16.

4.22.5 Urinals. If urinals are provided, *then* at least one shall comply with 4.18.

4.22.6 Lavatories and Mirrors. If lavatories and mirrors are provided, *then* at least one of each shall comply with 4.19.

4.22.7 Controls and Dispensers. If controls, dispensers, receptacles, or other

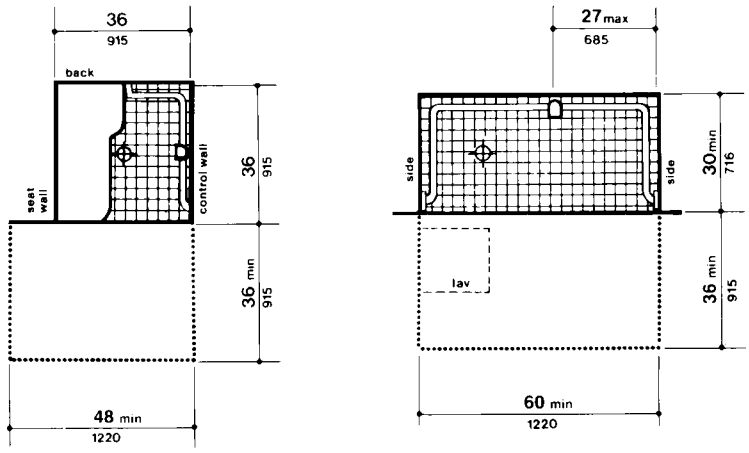

(a)
36-in by 36-in
(915-mm by 915-mm) Stall

(b)
30-in by 60-in
(760-mm by 1525-mm) Stall

Fig. 35
Shower Size and Clearances

4.23 Bathrooms, Bathing Facilities, and Shower Rooms

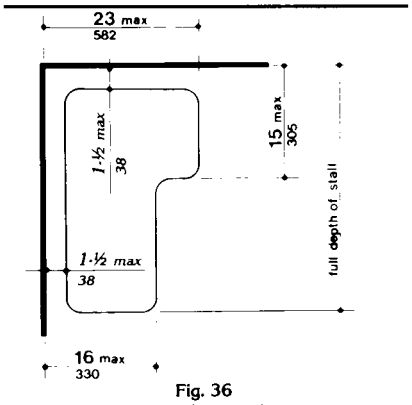

Fig. 36
Shower Seat Design

equipment are provided, *then* at least one of each shall be on an accessible route and shall comply with 4.27.

4.23 Bathrooms, Bathing Facilities, and Shower Rooms.

4.23.1 Minimum Number. Bathrooms, bathing facilities, or shower rooms *required to be accessible by 4.1* shall comply with 4.23 and shall be on an accessible route.

4.23.2 Doors. Doors to accessible bathrooms shall comply with 4.13. Doors shall not swing into the floor space required for any fixture.

4.23.3* Clear Floor Space. The accessible fixtures and controls required in 4.23.4, 4.23.5, 4.23.6, 4.23.7, 4.23.8, and 4.23.9 shall be on an accessible route. An unobstructed turning

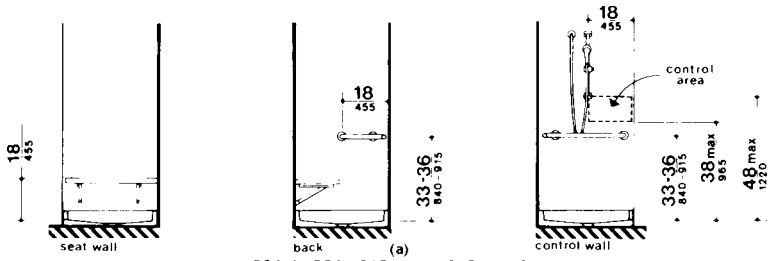

(a)
36-in by 36-in (915-mm by 915-mm) Stall

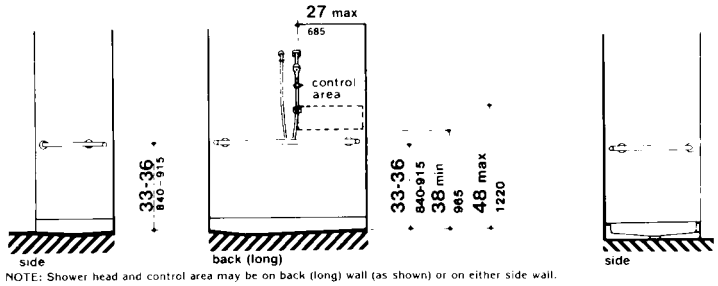

NOTE: Shower head and control area may be on back (long) wall (as shown) or on either side wall.

(b)
30-in by 60-in (760-mm by 1525-mm) Stall

Fig. 37
Grab Bars at Shower Stalls

space complying with 4.2.3 shall be provided within an accessible bathroom. The clear floor spaces at fixtures and controls, the accessible route, and the turning space may overlap.

4.23.4 Water Closets. If toilet stalls are provided, then at least one shall be a standard toilet stall complying with 4.17; *where 6 or more stalls are provided, in addition to the stall complying with 4.17.3, at least one stall 36 in (915 mm) wide with an outward swinging, self-closing door and parallel grab bars complying with Fig. 30(d) and 4.26 shall be provided. Water closets in such stalls* shall comply with 4.16. If water closets are not in stalls, then at least one shall comply with 4.16.

4.23.5 Urinals. If urinals are provided, then at least one shall comply with 4.18.

4.23.6 Lavatories and Mirrors. If lavatories and mirrors are provided, then at least one of each shall comply with 4.19.

4.23.7 Controls and Dispensers. If controls, dispensers, receptacles, or other equipment *are* provided, *then* at least one of each shall be on an accessible route and shall comply with 4.27.

4.23.8 Bathing and Shower Facilities. If tubs or showers are provided, then at least one accessible tub that complies with 4.20 or at least one accessible shower that complies with 4.21 shall be provided.

4.23.9* Medicine Cabinets. If medicine cabinets are provided, at least one shall be located with a usable shelf no higher than 44 in (1120 mm) above the floor space. The floor space shall comply with 4.2.4.

4.24 Sinks.

4.24.1 General. Sinks *required to be accessible by 4.1* shall comply with 4.24.

4.24.2 Height. Sinks shall be mounted with the counter or rim no higher than 34 in (865 mm) *above the finish* floor.

4.24.3 Knee Clearance. Knee clearance that is at least 27 in (685 mm) high, 30 in (760 mm) wide, and 19 in (485 mm) deep shall be provided underneath sinks.

4.24.4 Depth. Each sink shall be a maximum of 6-1/2 in (165 mm) deep.

4.24.5 Clear Floor Space. A clear floor space at least 30 in by 48 in (760 mm by 1220 mm) complying with 4.2.4 shall be provided in front of a sink to allow forward approach. The clear floor space shall be on an accessible route and shall extend a maximum of 19 in (485 mm) underneath the sink (see Fig. 32).

4.24.6 Exposed Pipes and Surfaces. Hot water and drain pipes exposed under sinks shall be insulated or otherwise *configured so as to protect against contact.* There shall be no sharp or abrasive surfaces under sinks.

4.24.7 Faucets. Faucets shall comply with 4.27.4. Lever-operated, push-type, touch-type, or electronically controlled mechanisms are acceptable designs.

4.25 Storage.

4.25.1 General. *Fixed* storage facilities such as cabinets, shelves, closets, and drawers *required to be accessible by 4.1* shall comply with 4.25.

4.25.2 Clear Floor Space. A clear floor space at least 30 in by 48 in (760 mm by 1220 mm) complying with 4.2.4 that allows either a forward or parallel approach by a person using a wheelchair shall be provided at accessible storage facilities.

4.25.3 Height. Accessible storage spaces shall be within at least one of the reach ranges specified in 4.2.5 and 4.2.6 *(see Fig. 5 and Fig. 6).* Clothes rods or shelves shall be a maximum of 54 in (1370 mm) *above the finish* floor *for a side approach. Where the distance from the wheelchair to the clothes rod or shelf exceeds 10 in (255 mm) (as in closets without accessible doors) the height and depth to the rod or shelf shall comply with Fig. 38(a) and Fig. 38(b).*

4.25.4 Hardware. Hardware for accessible storage facilities shall comply with 4.27.4. Touch latches and U-shaped pulls are acceptable.

4.26 Handrails, Grab Bars, and Tub and Shower Seats

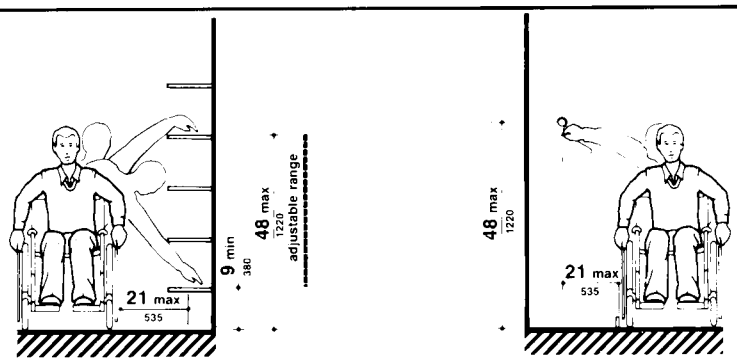

(a) Shelves *(b) Closets*

Fig. 38
Storage Shelves and Closets

4.26 Handrails, Grab Bars, and Tub and Shower Seats.

4.26.1* General. All handrails, grab bars, and tub and shower seats *required to be accessible by 4.1, 4.8, 4.9, 4.16, 4.17, 4.20 or 4.21* shall comply with 4.26.

4.26.2* Size and Spacing of Grab Bars and Handrails. The diameter or width of the gripping surfaces of a handrail or grab bar shall be 1-1/4 in to 1-1/2 in (32 mm to 38 mm), or the shape shall provide an equivalent gripping surface. If handrails or grab bars are mounted adjacent to a wall, the space between the wall and the grab bar shall be 1-1/2 in (38 mm) (see Fig. 39(a), (b), (c), and *(e)*). Handrails may be located in a recess if the recess is a maximum of 3 in (75 mm) deep and extends at least 18 in (455 mm) above the top of the rail (see Fig. 39(d)).

4.26.3 Structural Strength. The structural strength of grab bars, tub and shower seats, fasteners, and mounting devices shall meet the following specification:

(1) Bending stress in a grab bar or seat induced by the maximum bending moment from the application of 250 lbf (1112N) shall be less than the allowable stress for the material of the grab bar or seat.

(2) Shear stress induced in a grab bar or seat by the application of 250 lbf (1112N) shall be less than the allowable shear stress for the material of the grab bar or seat. If the connection between the grab bar or seat and its mounting bracket or other support is considered to be fully restrained, then direct and torsional shear stresses shall be totaled for the combined shear stress, which shall not exceed the allowable shear stress.

(3) Shear force induced in a fastener or mounting device from the application of 250 lbf (1112N) shall be less than the allowable lateral load of either the fastener or mounting device or the supporting structure, whichever is the smaller allowable load.

(4) Tensile force induced in a fastener by a direct tension force of 250 lbf (1112N) plus the maximum moment from the application of 250 lbf (1112N) shall be less than the allowable withdrawal load between the fastener and the supporting structure.

(5) Grab bars shall not rotate within their fittings.

4.26 Handrails, Grab Bars, and Tub and Shower Seats

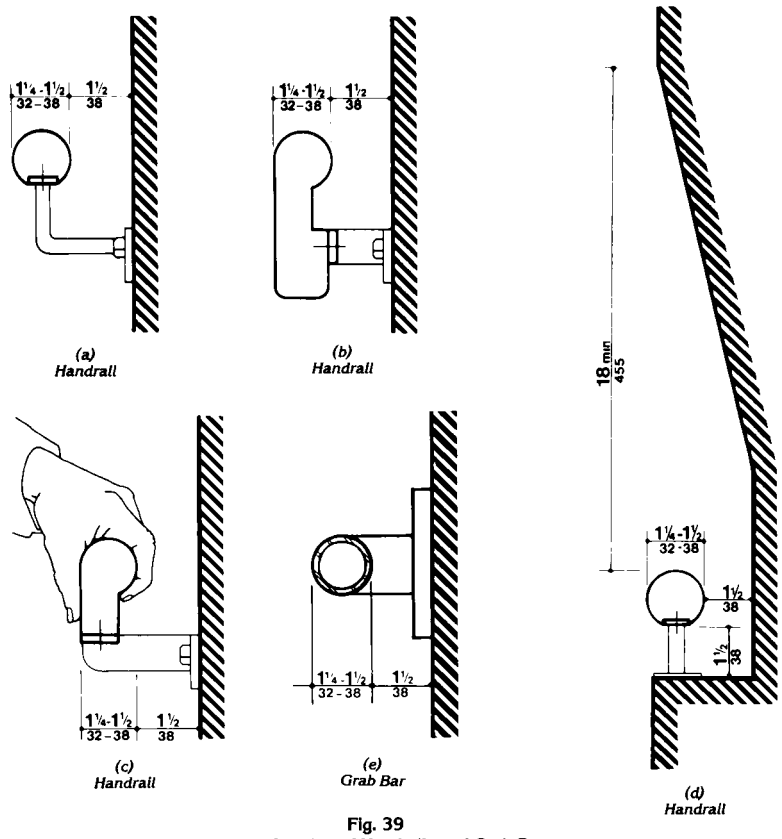

Fig. 39
Size and Spacing of Handrails and Grab Bars

4.26.4 Eliminating Hazards. A handrail or grab bar and any wall or other surface adjacent to it shall be free of any sharp or abrasive elements. Edges shall have a minimum radius of 1/8 in (3.2 mm).

4.27 Controls and Operating Mechanisms.

4.27.1 General. Controls and operating mechanisms *required to be accessible by 4.1* shall comply with 4.27.

4.28 Alarms

4.27.2 Clear Floor Space. Clear floor space complying with 4.2.4 that allows a forward or a parallel approach by a person using a wheelchair shall be provided at controls, dispensers, receptacles, and other operable equipment.

4.27.3* Height. The highest operable part of controls, dispensers, receptacles, and other operable equipment shall be placed within at least one of the reach ranges specified in 4.2.5 and 4.2.6. Electrical and communications system receptacles on walls shall be mounted no less than 15 in (380 mm) above the floor.

EXCEPTION: These requirements do not apply where the use of special equipment dictates otherwise or where electrical and communications systems receptacles are not normally intended for use by building occupants.

4.27.4 Operation. Controls and operating mechanisms shall be operable with one hand and shall not require tight grasping, pinching, or twisting of the wrist. The force required to activate controls shall be no greater than 5 lbf (22.2 N).

4.28 Alarms.

4.28.1 General. *Alarm systems required to be accessible by 4.1 shall comply with 4.28. At a minimum, visual signal appliances shall be provided in buildings and facilities in each of the following areas: restrooms and any other general usage areas (e.g., meeting rooms), hallways, lobbies, and any other area for common use.*

4.28.2* Audible Alarms. If provided, audible emergency alarms shall produce a sound that exceeds the prevailing equivalent sound level in the room or space by at least 15 *dbA* or exceeds any maximum sound level with a duration of *60* seconds by 5 *dbA*, whichever is louder. Sound levels for alarm signals shall not exceed 120 *dbA*.

4.28.3* Visual Alarms. *Visual alarm signal appliances shall be integrated into the building or facility alarm system. If single station audible alarms are provided then single station visual alarm signals shall be provided. Visual alarm signals shall have the following minimum photometric and location features:*

(1) The lamp shall be a xenon strobe type or equivalent.

(2) The color shall be clear or nominal white (i.e., unfiltered or clear filtered white light).

(3) The maximum pulse duration shall be two-tenths of one second (0.2 sec) with a maximum duty cycle of 40 percent. The pulse duration is defined as the time interval between initial and final points of 10 percent of maximum signal.

(4) The intensity shall be a minimum of 75 candela.

(5) The flash rate shall be a minimum of 1 Hz and a maximum of 3 Hz.

(6) The appliance shall be placed 80 in (2030 mm) above the highest floor level within the space or 6 in (152 mm) below the ceiling, whichever is lower.

(7) In general, no place in any room or space required to have a visual signal appliance shall be more than 50 ft (15 m) from the signal (in the horizontal plane). In large rooms and spaces exceeding 100 ft (30 m) across, without obstructions 6 ft (2 m) above the finish floor, such as auditoriums, devices may be placed around the perimeter, spaced a maximum 100 ft (30 m) apart, in lieu of suspending appliances from the ceiling.

(8) No place in common corridors or hallways in which visual alarm signalling appliances are required shall be more than 50 ft (15 m) from the signal.

4.28.4* Auxiliary Alarms. *Units and* sleeping accommodations shall have a visual alarm connected to the building emergency alarm system or shall have a standard 110-volt electrical receptacle into which such an alarm can be connected *and a means by which a signal from the building emergency alarm system can trigger such an auxiliary alarm. When visual alarms are in place the signal shall be visible in all areas of the unit or room.* Instructions for use of the auxiliary alarm or receptacle shall be provided.

4.29 *Detectable* Warnings.

4.29.1 General. *Detectable* warnings *required by 4.1 and 4.7* shall comply with 4.29.

4.29.2* *Detectable* Warnings on Walking Surfaces. *Detectable* warnings shall consist of *raised truncated domes with a diameter of nominal 0.9 in (23 mm), a height of nominal 0.2 in (5 mm) and a center-to-center spacing of nominal 2.35 in (60 mm) and* shall contrast *visually* with *adjoining surfaces, either light-on-dark, or dark-on-light.*

The material used to provide contrast shall be an integral part of the walking surface. Detectable warnings used on interior surfaces shall differ from adjoining walking surfaces in resiliency or sound-on-cane contact.

4.29.3 *Detectable* Warnings on Doors To Hazardous Areas. *(Reserved).*

4.29.4 *Detectable* Warnings at Stairs. *(Reserved).*

4.29.5 *Detectable* Warnings at Hazardous Vehicular Areas. If a walk crosses or adjoins a vehicular way, *and the walking surfaces are not separated by* curbs, railings, or other elements *between the pedestrian areas and vehicular areas,* the boundary between the areas shall be defined by a continuous *detectable* warning *which is* 36 in (915 mm) wide, complying with 4.29.2.

4.29.6 *Detectable* Warnings at Reflecting Pools. The edges of reflecting pools shall be protected by railings, walls, curbs, or *detectable* warnings complying with 4.29.2.

4.29.7 Standardization. *(Reserved).*

4.30 Signage.

4.30.1* General. Signage *required to be accessible by 4.1 shall comply with the applicable provisions of 4.30.*

4.30.2* Character Proportion. Letters and numbers on signs shall have a width-to-height ratio between 3:5 and 1:1 and a stroke-width-to-height ratio between 1:5 and 1:10.

4.30.3 Character Height. *Characters and numbers on signs shall be sized according to the viewing distance from which they are to be read. The minimum height is measured using an upper case X. Lower case characters are permitted.*

Height Above Finished Floor	*Minimum Character Height*
Suspended or Projected Overhead in compliance with 4.4.2	*3 in. (75 mm) minimum*

4.30.4* Raised *and Brailled* Characters *and Pictorial Symbol Signs (Pictograms).* Letters and numerals shall be raised 1/32 in, *upper case,* sans serif *or simple serif type and shall be accompanied with Grade 2 Braille.* Raised characters shall be at least 5/8 in (16 mm) high, but no higher than 2 in (50 mm). *Pictograms shall be accompanied by the equivalent verbal description placed directly below the pictogram. The border dimension of the pictogram shall be 6 in (152 mm) minimum in height.*

4.30.5* Finish and Contrast. *The characters and background of signs shall be eggshell, matte, or other non-glare finish.* Characters and symbols shall contrast with their background — either light characters on a dark background or dark characters on a light background.

4.30.6 Mounting Location and Height. *Where permanent identification is provided for rooms and spaces, signs shall be installed on the wall adjacent to the latch side of the door. Where there is no wall space to the latch side of the door, including at double leaf doors, signs shall be placed on the nearest adjacent wall. Mounting height shall be 60 in (1525 mm) above the finish floor to the centerline of the sign. Mounting location for such signage shall be so that a person may approach within 3 in (76 mm) of signage without encountering protruding objects or standing within the swing of a door.*

4.30.7* Symbols of Accessibility.

(1) Facilities and elements required to be identified as accessible by 4.1 shall use the international symbol of accessibility. The

4.30 Signage

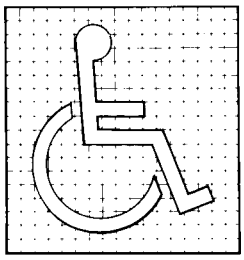

(a)
Proportions
International Symbol of Accessibility

(b)
Display Conditions
International Symbol of Accessibility

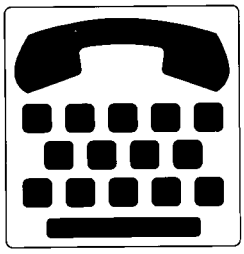

(c)
International TDD Symbol

(d)
International Symbol of Access for Hearing Loss

Fig. 43
International Symbols

symbol shall be displayed as shown in Fig. 43*(a) and (b).*

(2) Volume Control Telephones. Telephones required to have a volume control by 4.1.3(17)(b) shall be identified by a sign containing a depiction of a telephone handset with radiating sound waves.

(3) Text Telephones. Text telephones required by 4.1.3 (17)(c) shall be identified by the international TDD symbol (Fig 43(c)). In addition, if a facility has a public text telephone, directional signage indicating the location of the nearest text telephone shall be placed adjacent to all banks of telephones which do not contain a text telephone. Such directional signage shall include the international TDD symbol. If a facility has no banks of telephones, the directional signage shall be provided at the entrance (e.g., in a building directory).

(4) Assistive Listening Systems. In assembly areas where permanently installed assistive listening systems are required by 4.1.3(19)(b) the availability of such systems shall be identified with signage that includes the international symbol of access for hearing loss (Fig 43(d)).

4.30.8* Illumination Levels. *(Reserved).*

4.31 Telephones.

4.31.1 General. Public telephones *required to be accessible by 4.1* shall comply with 4.31.

4.31.2 Clear Floor or Ground Space. A clear floor or ground space at least 30 in by 48 in (760 mm by 1220 mm) that allows either a forward or parallel approach by a person using a wheelchair shall be provided at telephones (see Fig. 44). The clear floor or ground space shall comply with 4.2.4. Bases, enclosures, and fixed seats shall not impede approaches to telephones by people who use wheelchairs.

4.31.3* Mounting Height. The highest operable part of the telephone shall be within the reach ranges specified in 4.2.5 or 4.2.6.

4.31.4 ***Protruding Objects.*** *Telephones shall comply with 4.4.*

4.31 Telephones

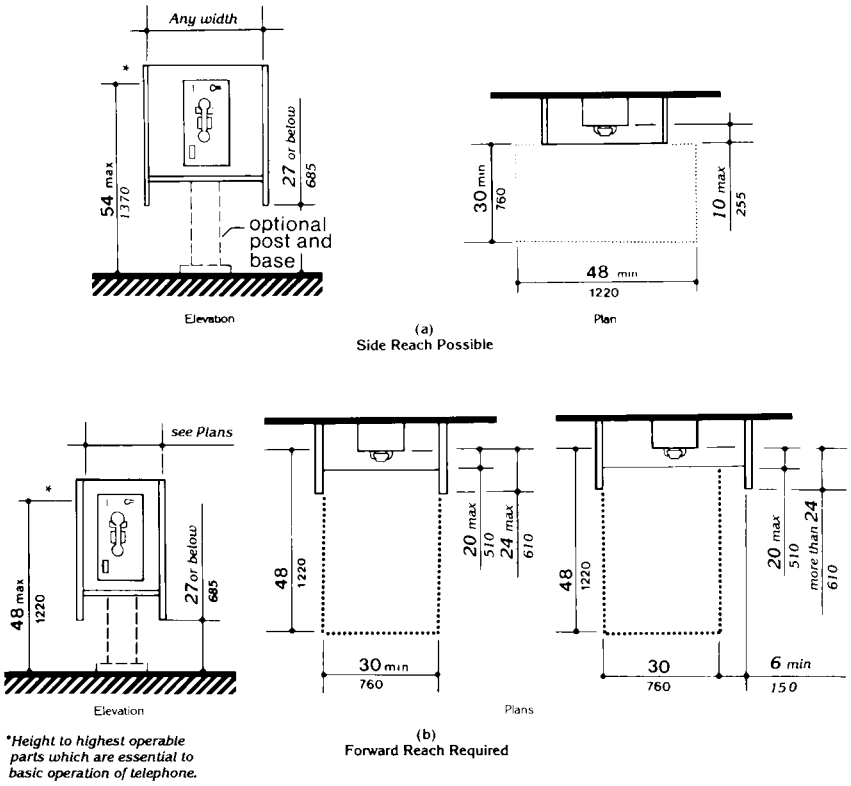

*Height to highest operable parts which are essential to basic operation of telephone.

Fig. 44
Mounting Heights and Clearances for Telephones

4.31.5 *Hearing Aid Compatible and Volume Control Telephones Required by 4.1.*

(1) Telephones shall be hearing aid compatible.

(2) Volume controls, *capable of a minimum of 12 dbA and a maximum of 18 dbA above normal, shall be provided in accordance with 4.1.3. If an automatic reset is provided then 18 dbA may be exceeded.*

4.31.6 Controls. Telephones shall have pushbutton controls where service for such equipment is available.

55

4.31.7 Telephone Books. Telephone books, if provided, shall be located *in a position that complies with the reach ranges specified in 4.2.5 and 4.2.6.*

4.31.8 Cord Length. The cord from the telephone to the handset shall be at least 29 in (735 mm) long.

4.31.9* Text Telephones Required by 4.1.

(1) Text telephones used with a pay telephone shall be permanently affixed within, or adjacent to, the telephone enclosure. If an acoustic coupler is used, the telephone cord shall be sufficiently long to allow connection of the text telephone and the telephone receiver.

(2) Pay telephones designed to accommodate a portable text telephone shall be equipped with a shelf and an electrical outlet within or adjacent to the telephone enclosure. The telephone handset shall be capable of being placed flush on the surface of the shelf. The shelf shall be capable of accommodating a text telephone and shall have 6 in (152 mm) minimum vertical clearance in the area where the text telephone is to be placed.

(3) Equivalent facilitation may be provided. For example, a portable text telephone may be made available in a hotel at the registration desk if it is available on a 24-hour basis for use with nearby public pay telephones. In this instance, at least one pay telephone shall comply with paragraph 2 of this section. In addition, if an acoustic coupler is used, the telephone handset cord shall be sufficiently long so as to allow connection of the text telephone and the telephone receiver. Directional signage shall be provided and shall comply with 4.30.7.

4.32 *Fixed or Built-in* Seating and Tables.

4.32.1 Minimum Number. Fixed or built-in seating or tables *required to be accessible by 4.1* shall comply with 4.32.

4.32.2 Seating. If seating spaces for people in wheelchairs are provided at *fixed* tables or counters, clear floor space complying with 4.2.4 shall be provided. Such clear floor space shall not overlap knee space by more than 19 in (485 mm) (see Fig. 45).

4.32.3 Knee Clearances. If seating for people in wheelchairs is provided at tables *or* counters, knee spaces at least 27 in (685 mm) high, 30 in (760 mm) wide, and 19 in (485 mm) deep shall be provided (see Fig. 45).

4.32.4* Height of Tables or Counters. The tops of *accessible* tables and *counters* shall be from 28 in to 34 in (710 mm to 865 mm) *above the finish* floor or ground.

4.33 Assembly Areas.

4.33.1 Minimum Number. Assembly *and associated* areas *required to be accessible by 4.1 shall comply with 4.33.*

4.33.2* Size of Wheelchair Locations. Each wheelchair location shall provide minimum clear ground or floor spaces as shown in Fig. 46.

4.33.3* Placement of Wheelchair Locations. Wheelchair areas shall be an integral part of any fixed seating plan and shall be *provided so as to provide people with physical disabilities a choice of admission prices and lines of sight comparable to those for members of the general public.* They shall adjoin an accessible route that also serves as a means of egress in case of emergency. *At least one companion fixed seat shall be provided next to each wheelchair seating area. When the seating capacity exceeds 300, wheelchair spaces shall be provided in more than one location. Readily removable seats may be installed in wheelchair spaces when the spaces are not required to accommodate wheelchair users.*

EXCEPTION: Accessible viewing positions may be clustered for bleachers, balconies, and other areas having sight lines that require slopes of greater than 5 percent. Equivalent accessible viewing positions may be located on levels having accessible egress.

4.33.4 Surfaces. The ground or floor at wheelchair locations shall be level and shall comply with 4.5.

4.33 Assembly Areas

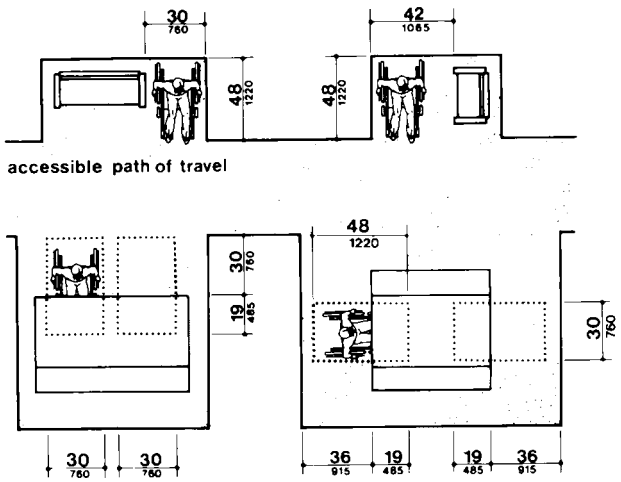

Fig. 45
Minimum Clearances for Seating and Tables

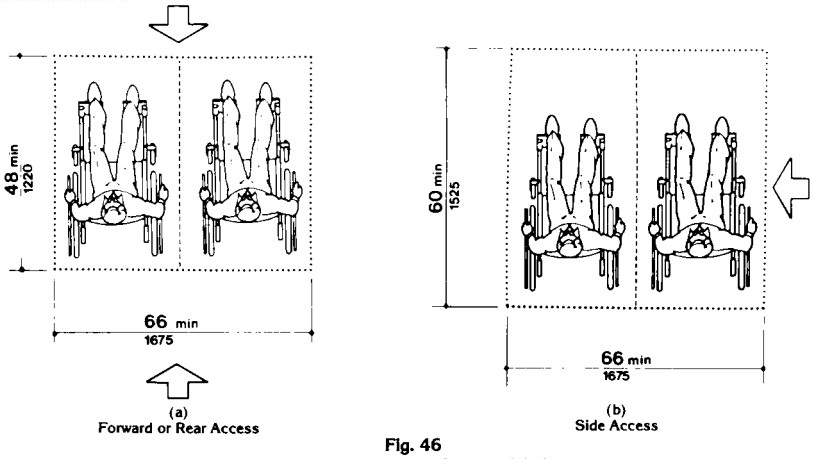

Fig. 46
Space Requirements for Wheelchair
Seating Spaces in Series

57

4.34 Automated Teller Machines

4.33.5 Access to Performing Areas. An accessible route shall connect wheelchair seating locations with performing areas, including stages, arena floors, dressing rooms, locker rooms, and other spaces used by performers.

4.33.6* Placement of Listening Systems. If the listening system provided serves individual fixed seats, then such seats shall be located within a 50 ft (15 m) viewing distance of the stage or playing area and shall have a complete view of the stage or playing area.

4.33.7* Types of Listening Systems. *Assistive listening systems (ALS) are intended to augment standard public address and audio systems by providing signals which can be received directly by persons with special receivers or their own hearing aids and which eliminate or filter background noise. The type of assistive listening system appropriate for a particular application depends on the characteristics of the setting, the nature of the program, and the intended audience. Magnetic induction loops, infra-red and radio frequency systems are types of listening systems which are appropriate for various applications.*

4.34 Automated Teller Machines.

4.34.1 General. *Each machine required to be accessible by 4.1.3 shall be on an accessible route and shall comply with 4.34.*

4.34.2 Controls. *Controls for user activation shall comply with the requirements of 4.27.*

4.34.3 Clearances and Reach Range. *Free standing or built-in units not having a clear space under them shall comply with 4.27.2 and 4.27.3 and provide for a parallel approach and both a forward and side reach to the unit allowing a person in a wheelchair to access the controls and dispensers.*

4.34.4 Equipment for Persons with Vision Impairments. *Instructions and all information for use shall be made accessible to and independently usable by persons with vision impairments.*

4.35 Dressing and Fitting Rooms.

4.35.1 General. *Dressing and fitting rooms required to be accessible by 4.1 shall comply with 4.35 and shall be on an accessible route.*

4.35.2 Clear Floor Space. *A clear floor space allowing a person using a wheelchair to make a 180-degree turn shall be provided in every accessible dressing room entered through a swinging or sliding door. No door shall swing into any part of the turning space. Turning space shall not be required in a private dressing room entered through a curtained opening at least 32 in (815 mm) wide if clear floor space complying with section 4.2 renders the dressing room usable by a person using a wheelchair.*

4.35.3 Doors. *All doors to accessible dressing rooms shall be in compliance with section 4.13.*

4.35.4 Bench. *Every accessible dressing room shall have a 24 in by 48 in (610 mm by 1220 mm) bench fixed to the wall along the longer dimension. The bench shall be mounted 17 in to 19 in (430 mm to 485 mm) above the finish floor. Clear floor space shall be provided alongside the bench to allow a person using a wheelchair to make a parallel transfer onto the bench. The structural strength of the bench and attachments shall comply with 4.26.3. Where installed in conjunction with showers, swimming pools, or other wet locations, water shall not accumulate upon the surface of the bench and the bench shall have a slip-resistant surface.*

4.35.5 Mirror. *Where mirrors are provided in dressing rooms of the same use, then in an accessible dressing room, a full-length mirror, measuring at least 18 in wide by 54 in high (460 mm by 1370 mm), shall be mounted in a position affording a view to a person on the bench as well as to a person in a standing position.*

NOTE: Sections 4.1.1 through 4.1.7 and sections 5 through 10 are different from ANSI A117.1 in their entirety and are printed in standard type.

5. RESTAURANTS AND CAFETERIAS.

5.1* General. Except as specified or modified in this section, restaurants and cafeterias shall comply with the requirements of 4.1 to 4.35. Where fixed tables (or dining counters where food is consumed but there is no service) are provided, at least 5 percent, but not less than one, of the fixed tables (or a portion of the dining counter) shall be accessible and shall comply with 4.32 as required in 4.1.3(18). In establishments where separate areas are designated for smoking and non-smoking patrons, the required number of accessible fixed tables (or counters) shall be proportionally distributed between the smoking and non-smoking areas. In new construction, and where practicable in alterations, accessible fixed tables (or counters) shall be distributed throughout the space or facility.

5.2 Counters and Bars. Where food or drink is served at counters exceeding 34 in (865 mm) in height for consumption by customers seated on stools or standing at the counter, a portion of the main counter which is 60 in (1525 mm) in length minimum shall be provided in compliance with 4.32 or service shall be available at accessible tables within the same area.

5.3 Access Aisles. All accessible fixed tables shall be accessible by means of an access aisle at least 36 in (915 mm) clear between parallel edges of tables or between a wall and the table edges.

5.4 Dining Areas. In new construction, all dining areas, including raised or sunken dining areas, loggias, and outdoor seating areas, shall be accessible. In non-elevator buildings, an accessible means of vertical access to the mezzanine is not required under the following conditions: 1) the area of mezzanine seating measures no more than 33 percent of the area of the total accessible seating area; 2) the same services and decor are provided in an accessible space usable by the general public; and, 3) the accessible areas are not restricted to use by people with disabilities. In alterations, accessibility to raised or sunken dining areas, or to all parts of outdoor seating areas is not required provided that the same services and decor are provided in an accessible space usable by the general public and are not restricted to use by people with disabilities.

5.5 Food Service Lines. Food service lines shall have a minimum clear width of 36 in (915 mm), with a preferred clear width of 42 in (1065 mm) to allow passage around a person using a wheelchair. Tray slides shall be mounted no higher than 34 in (865 mm) above the floor (see Fig. 53). If self-service shelves

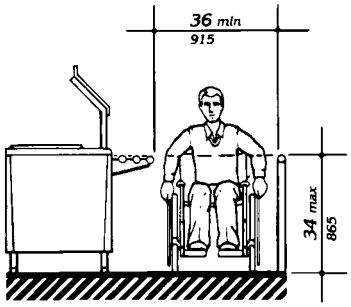

Fig. 53
Food Service Lines

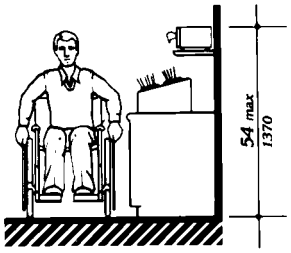

Fig. 54
Tableware Areas

are provided, at least 50 percent of each type must be within reach ranges specified in 4.2.5 and 4.2.6.

5.6 Tableware and Condiment Areas. Self-service shelves and dispensing devices for tableware, dishware, condiments, food and beverages shall be installed to comply with 4.2 (see Fig. 54).

5.7 Raised Platforms. In banquet rooms or spaces where a head table or speaker's lectern is located on a raised platform, the platform shall be accessible in compliance with 4.8 or 4.11. Open edges of a raised platform shall be protected by placement of tables or by a curb.

5.8 Vending Machines and Other Equipment. Spaces for vending machines and other equipment shall comply with 4.2 and shall be located on an accessible route.

5.9 Quiet Areas. (Reserved).

6. MEDICAL CARE FACILITIES.

6.1 General. Medical care facilities included in this section are those in which people receive physical or medical treatment or care and where persons may need assistance in responding to an emergency and where the period of stay may exceed twenty-four hours. In addition to the requirements of 4.1 through 4.35, medical care facilities and buildings shall comply with 6.

(1) Hospitals - general purpose hospitals, psychiatric facilities, detoxification facilities — At least 10 percent of patient bedrooms and toilets, and all public use and common use areas are required to be designed and constructed to be accessible.

(2) Hospitals and rehabilitation facilities that specialize in treating conditions that affect mobility, or units within either that specialize in treating conditions that affect mobility — All patient bedrooms and toilets, and all public use and common use areas are required to be designed and constructed to be accessible.

(3) Long term care facilities, nursing homes — At least 50 percent of patient bedrooms and toilets, and all public use and common use areas are required to be designed and constructed to be accessible.

(4) Alterations to patient bedrooms.

(a) When patient bedrooms are being added or altered as part of a planned renovation of an entire wing, a department, or other discrete area of an existing medical facility, a percentage of the patient bedrooms that are being added or altered shall comply with 6.3. The percentage of accessible rooms provided shall be consistent with the percentage of rooms required to be accessible by the applicable requirements of 6.1(1), 6.1(2), or 6.1(3), until the number of accessible patient bedrooms in the facility equals the overall number that would be required if the facility were newly constructed. (For example, if 20 patient bedrooms are being altered in the obstetrics department of a hospital, 2 of the altered rooms must be made accessible. If, within the same hospital, 20 patient bedrooms are being altered in a unit that specializes in treating mobility impairments, all of the altered rooms must be made accessible.) Where toilet/bath rooms are part of patient bedrooms which are added or altered and required to be accessible, each such patient toilet/bathroom shall comply with 6.4.

(b) When patient bedrooms are being added or altered individually, and not as part of an alteration of the entire area, the altered patient bedrooms shall comply with 6.3, unless either: a) the number of accessible rooms provided in the department or area containing the altered patient bedroom equals the number of accessible patient bedrooms that would be required if the percentage requirements of 6.1(1), 6.1(2), or 6.1(3) were applied to that department or area; or b) the number of accessible patient bedrooms in the facility equals the overall number that would be required if the facility were newly constructed. Where toilet/bathrooms are part of patient bedrooms which are added or altered and required to be accessible, each such toilet/bathroom shall comply with 6.4.

6.2 Entrances. At least one accessible entrance that complies with 4.14 shall be protected from the weather by canopy or roof overhang. Such entrances shall incorporate a passenger loading zone that complies with 4.6.6.

6.3 Patient Bedrooms. Provide accessible patient bedrooms in compliance with 4.1 through 4.35. Accessible patient bedrooms shall comply with the following:

(1) Each bedroom shall have a door that complies with 4.13.

EXCEPTION: Entry doors to acute care hospital bedrooms for in-patients shall be exempted from the requirement in 4.13.6 for maneuvering space at the latch side of the door if the door is at least 44 in (1120 mm) wide.

(2) Each bedroom shall have adequate space to provide a maneuvering space that complies with 4.2.3. In rooms with 2 beds, it is preferable that this space be located between beds.

(3) Each bedroom shall have adequate space to provide a minimum clear floor space of 36 in (915 mm) along each side of the bed and to provide an accessible route complying with 4.3.3 to each side of each bed.

6.4 Patient Toilet Rooms. Where toilet/bath rooms are provided as a part of a patient bedroom, each patient bedroom that is required to be accessible shall have an accessible toilet/bath room that complies with 4.22 or 4.23 and shall be on an accessible route.

7. BUSINESS AND MERCANTILE.

7.1 General. In addition to the requirements of 4.1 to 4.35, the design of all areas used for business transactions with the public shall comply with 7.

7.2 Sales and Service Counters, Teller Windows, Information Counters.

(1) In department stores and miscellaneous retail stores where counters have cash registers and are provided for sales or distribution of goods or services to the public, at least one of each type shall have a portion of the counter which is at least 36 in (915 mm) in length with a maximum height of 36 in (915 mm) above the finish floor. It shall be on an accessible route complying with 4.3. The accessible counters must be dispersed throughout the building or facility. In alterations where it is technically infeasible to provide an accessible counter, an auxiliary counter meeting these requirements may be provided.

(2) At ticketing counters, teller stations in a bank, registration counters in hotels and motels, box office ticket counters, and other counters that may not have a cash register but at which goods or services are sold or distributed, either:

(i) a portion of the main counter which is a minimum of 36 in (915 mm) in length shall be provided with a maximum height of 36 in (915 mm); or

(ii) an auxiliary counter with a maximum height of 36 in (915 mm) in close proximity to the main counter shall be provided; or

(iii) equivalent facilitation shall be provided (e.g., at a hotel registration counter, equivalent facilitation might consist of: (1) provision of a folding shelf attached to the main counter on which an individual with disabilities can write, and (2) use of the space on the side of the counter or at the concierge desk, for handing materials back and forth).

All accessible sales and service counters shall be on an accessible route complying with 4.3.

(3)* Assistive Listening Devices. (Reserved)

8.0 Libraries

7.3* Check-out Aisles.

(1) In new construction, accessible check-out aisles shall be provided in conformance with the table below:

Total Check-out Aisles of Each Design	Minimum Number of Accessible Check-out Aisles (of each design)
1 - 4	1
5 - 8	2
8 - 15	3
over 15	3, plus 20% of additional aisles

EXCEPTION: In new construction, where the selling space is under 5000 square feet, only one check-out aisle is required to be accessible.

EXCEPTION: In alterations, at least one check-out aisle shall be accessible in facilities under 5000 square feet of selling space. In facilities of 5000 or more square feet of selling space, at least one of each design of check-out aisle shall be made accessible when altered until the number of accessible check-out aisles of each design equals the number required in new construction.

Examples of check-out aisles of different "design" include those which are specifically designed to serve different functions. Different "design" includes but is not limited to the following features - length of belt or no belt; or permanent signage designating the aisle as an express lane.

(2) Clear aisle width for accessible check-out aisles shall comply with 4.2.1 and maximum adjoining counter height shall not exceed 38 in (965 mm) above the finish floor. The top of the lip shall not exceed 40 in (1015 mm) above the finish floor.

(3) Signage identifying accessible check-out aisles shall comply with 4.30.7 and shall be mounted above the check-out aisle in the same location where the check-out number or type of check-out is displayed.

7.4 Security Bollards. Any device used to prevent the removal of shopping carts from store premises shall not prevent access or egress to people in wheelchairs. An alternate entry that is equally convenient to that provided for the ambulatory population is acceptable.

8. LIBRARIES.

8.1 General. In addition to the requirements of 4.1 to 4.35, the design of all public areas of a library shall comply with 8, including reading and study areas, stacks, reference rooms, reserve areas, and special facilities or collections.

8.2 Reading and Study Areas. At least 5 percent or a minimum of one of each element of fixed seating, tables, or study carrels shall comply with 4.2 and 4.32. Clearances between fixed accessible tables and between study carrels shall comply with 4.3.

8.3 Check-Out Areas. At least one lane at each check-out area shall comply with 7.2(1). Any traffic control or book security gates or turnstiles shall comply with 4.13.

8.4 Card Catalogs and Magazine Displays. Minimum clear aisle space at card catalogs and magazine displays shall comply with Fig. 55. Maximum reach height shall comply with 4.2, with a height of 48 in (1220 mm) preferred irrespective of approach allowed.

8.5 Stacks. Minimum clear aisle width between stacks shall comply with 4.3, with a minimum clear aisle width of 42 in (1065 mm) preferred where possible. Shelf height in stack areas is unrestricted (see Fig. 56).

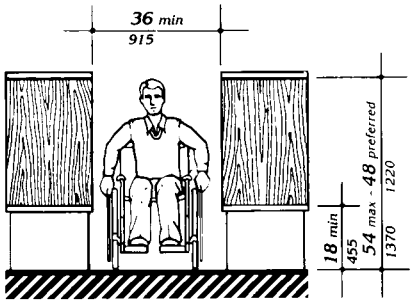

Fig. 55
Card Catalog

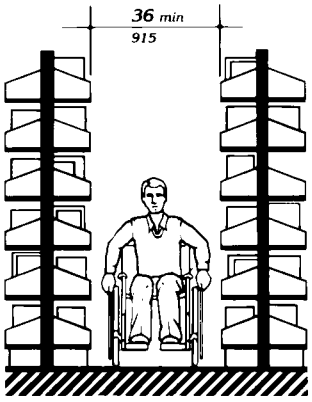

Fig. 56
Stacks

9. ACCESSIBLE TRANSIENT LODGING.

(1) Except as specified in the special technical provisions of this section, accessible transient lodging shall comply with the applicable requirements of 4.1 through 4.35. Transient lodging includes facilities or portions thereof used for sleeping accommodations, when not classed as a medical care facility.

9.1 Hotels, Motels, Inns, Boarding Houses, Dormitories, Resorts and Other Similar Places of Transient Lodging.

9.1.1 General. All public use and common use areas are required to be designed and constructed to comply with section 4 (Accessible Elements and Spaces: Scope and Technical Requirements).

EXCEPTION: Sections 9.1 through 9.4 do not apply to an establishment located within a building that contains not more than five rooms for rent or hire and that is actually occupied by the proprietor of such establishment as the residence of such proprietor.

9.1.2 Accessible Units, Sleeping Rooms, and Suites. Accessible sleeping rooms or suites that comply with the requirements of 9.2 (Requirements for Accessible Units, Sleeping Rooms, and Suites) shall be provided in conformance with the table below. In addition, in hotels, of 50 or more sleeping rooms or suites, additional accessible sleeping rooms or suites that include a roll-in shower shall also be provided in conformance with the table below. Such accommodations shall comply with the requirements of 9.2, 4.21, and Figure 57(a) or (b).

9.1.3 Sleeping Accommodations for Persons with Hearing Impairments

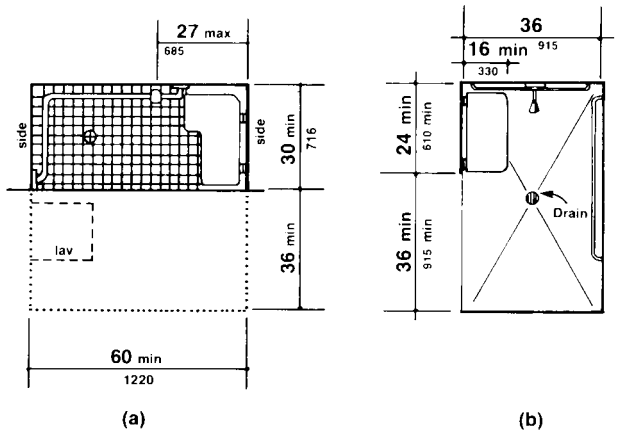

Fig. 57
Roll-in Shower with Folding Seat

Number of Rooms	Accessible Rooms	Rooms with Roll-in Showers
1 to 25	1	
26 to 50	2	
51 to 75	3	1
76 to 100	4	1
101 to 150	5	2
151 to 200	6	2
201 to 300	7	3
301 to 400	8	4
401 to 500	9	4 plus one for each additional 100 over 400
501 to 1000	2% of total	
1001 and over	20 plus 1 for each 100 over 1000	

9.1.3 Sleeping Accommodations for Persons with Hearing Impairments. In addition to those accessible sleeping rooms and suites required by 9.1.2, sleeping rooms and suites that comply with 9.3 (Visual Alarms, Notification Devices, and Telephones) shall be provided in conformance with the following table:

Number of Elements	Accessible Elements
1 to 25	1
26 to 50	2
51 to 75	3
76 to 100	4
101 to 150	5
151 to 200	6
201 to 300	7
301 to 400	8
401 to 500	9
501 to 1000	2% of total
1001 and over	20 plus 1 for each 100 over 1000

9.1.4 Classes of Sleeping Accommodations.

(1) In order to provide persons with disabilities a range of options equivalent to those available to other persons served by the facility, sleeping rooms and suites required to be accessible by 9.1.2 shall be dispersed among the various classes of sleeping accommodations available to patrons of the place of transient lodging. Factors to be considered include room size, cost, amenities provided, and the number of beds provided.

(2) Equivalent Facilitation. For purposes of this section, it shall be deemed equivalent facilitation if the operator of a facility elects to limit construction of accessible rooms to those intended for multiple occupancy, provided that such rooms are made available at the cost of a single-occupancy room to an individual with disabilities who requests a single-occupancy room.

9.1.5. Alterations to Accessible Units, Sleeping Rooms, and Suites. When sleeping rooms are being altered in an existing facility, or portion thereof, subject to the requirements of this section, at least one sleeping room or suite that complies with the requirements of 9.2 (Requirements for Accessible Units, Sleeping Rooms, and Suites) shall be provided for each 25 sleeping rooms, or fraction thereof, of rooms being altered until the number of such rooms provided equals the number required to be accessible with 9.1.2. In addition, at least one sleeping room or suite that complies with the requirements of 9.3 (Visual Alarms, Notification Devices, and Telephones) shall be provided for each 25 sleeping rooms, or fraction thereof, of rooms being altered until the number of such rooms equals the number required to be accessible by 9.1.3.

9.2 Requirements for Accessible Units, Sleeping Rooms and Suites.

9.2.1 General. Units, sleeping rooms, and suites required to be accessible by 9.1 shall comply with 9.2.

9.2.2 Minimum Requirements. An accessible unit, sleeping room or suite shall be on an accessible route complying with 4.3 and have the following accessible elements and spaces.

(1) Accessible sleeping rooms shall have a 36 in (915 mm) clear width maneuvering space located along both sides of a bed, except that where two beds are provided, this requirement can be met by providing a 36 in (915 mm) wide maneuvering space located between the two beds.

(2) An accessible route complying with 4.3 shall connect all accessible spaces and elements, including telephones, within the unit, sleeping room, or suite. This is not intended to require an elevator in multi-story units as long as the spaces identified in 9.2.2(6) and (7) are on accessible levels and the accessible sleeping area is suitable for dual occupancy.

(3) Doors and doorways designed to allow passage into and within all sleeping rooms, suites or other covered units shall comply with 4.13.

(4) If fixed or built-in storage facilities such as cabinets, shelves, closets, and drawers are provided in accessible spaces, at least one of each type provided shall contain storage space complying with 4.25. Additional storage may be provided outside of the dimensions required by 4.25.

(5) All controls in accessible units, sleeping rooms, and suites shall comply with 4.27.

(6) Where provided as part of an accessible unit, sleeping room, or suite, the following spaces shall be accessible and shall be on an accessible route:

(a) the living area.

(b) the dining area.

(c) at least one sleeping area.

(d) patios, terraces, or balconies.

EXCEPTION: The requirements of 4.13.8 and 4.3.8 do not apply where it is necessary to utilize a higher door threshold or a change in level to protect the integrity of the unit from wind/water damage. Where this exception results in patios, terraces or balconies that are not at an accessible level, equivalent facilitation

shall be provided. (E.g., equivalent facilitation at a hotel patio or balcony might consist of providing raised decking or a ramp to provide accessibility.)

(e) at least one full bathroom (i.e., one with a water closet, a lavatory, and a bathtub or shower).

(f) if only half baths are provided, at least one half bath.

(g) carports, garages or parking spaces.

(7) Kitchens, Kitchenettes, or Wet Bars. When provided as accessory to a sleeping room or suite, kitchens, kitchenettes, wet bars, or similar amenities shall be accessible. Clear floor space for a front or parallel approach to cabinets, counters, sinks, and appliances shall be provided to comply with 4.2.4. Countertops and sinks shall be mounted at a maximum height of 34 in (865 mm) above the floor. At least fifty percent of shelf space in cabinets or refrigerator/freezers shall be within the reach ranges of 4.2.5 or 4.2.6 and space shall be designed to allow for the operation of cabinet and/or appliance doors so that all cabinets and appliances are accessible and usable. Controls and operating mechanisms shall comply with 4.27.

(8) Sleeping room accommodations for persons with hearing impairments required by 9.1 and complying with 9.3 shall be provided in the accessible sleeping room or suite.

9.3 Visual Alarms, Notification Devices and Telephones.

9.3.1 General. In sleeping rooms required to comply with this section, auxiliary visual alarms shall be provided and shall comply with 4.28.4. Visual notification devices shall also be provided in units, sleeping rooms and suites to alert room occupants of incoming telephone calls and a door knock or bell. Notification devices shall not be connected to auxiliary visual alarm signal appliances. Permanently installed telephones shall have volume controls complying with 4.31.5; an accessible electrical outlet within 4 ft (1220 mm) of a telephone connection shall be provided to facilitate the use of a text telephone.

9.3.2 Equivalent Facilitation. For purposes of this section, equivalent facilitation shall include the installation of electrical outlets (including outlets connected to a facility's central alarm system) and telephone wiring in sleeping rooms and suites to enable persons with hearing impairments to utilize portable visual alarms and communication devices provided by the operator of the facility.

9.4 Other Sleeping Rooms and Suites.

Doors and doorways designed to allow passage into and within all sleeping units or other covered units shall comply with 4.13.5.

9.5 Transient Lodging in Homeless Shelters, Halfway Houses, Transient Group Homes, and Other Social Service Establishments.

9.5.1 New Construction. In new construction all public use and common use areas are required to be designed and constructed to comply with section 4. At least one of each type of amenity (such as washers, dryers and similar equipment installed for the use of occupants) in each common area shall be accessible and shall be located on an accessible route to any accessible unit or sleeping accommodation.

EXCEPTION: Where elevators are not provided as allowed in 4.1.3(5), accessible amenities are not required on inaccessible floors as long as one of each type is provided in common areas on accessible floors.

9.5.2 Alterations.

(1) Social service establishments which are not homeless shelters:

(a) The provisions of 9.5.3 and 9.1.5 shall apply to sleeping rooms and beds.

(b) Alteration of other areas shall be consistent with the new construction provisions of 9.5.1.

(2) Homeless shelters. If the following elements are altered, the following requirements apply:

(a) at least one public entrance shall allow a person with mobility impairments to approach, enter and exit including a minimum clear door width of 32 in (815 mm).

(b) sleeping space for homeless persons as provided in the scoping provisions of 9.1.2 shall include doors to the sleeping area with a minimum clear width of 32 in (815 mm) and maneuvering space around the beds for persons with mobility impairments complying with 9.2.2(1).

(c) at least one toilet room for each gender or one unisex toilet room shall have a minimum clear door width of 32 in (815 mm), minimum turning space complying with 4.2.3, one water closet complying with 4.16, one lavatory complying with 4.19 and the door shall have a privacy latch; and, if provided, at least one tub or shower shall comply with 4.20 or 4.21, respectively.

(d) at least one common area which a person with mobility impairments can approach enter and exit including a minimum clear door width of 32 in (815 mm).

(e) at least one route connecting elements (a), (b), (c) and (d) which a person with mobility impairments can use including minimum clear width of 36 in (915 mm), passing space complying with 4.3.4, turning space complying with 4.2.3 and changes in levels complying with 4.3.8.

(f) homeless shelters can comply with the provisions of (a)-(e) by providing the above elements on one accessible floor.

9.5.3. Accessible Sleeping Accommodations in New Construction. Accessible sleeping rooms shall be provided in conformance with the table in 9.1.2 and shall comply with 9.2 Accessible Units, Sleeping Rooms and Suites (where the items are provided). Additional sleeping rooms that comply with 9.3 Sleeping Accommodations for Persons with Hearing Impairments shall be provided in conformance with the table provided in 9.1.3.

In facilities with multi-bed rooms or spaces, a percentage of the beds equal to the table provided in 9.1.2 shall comply with 9.2.2(1).

10. TRANSPORTATION FACILITIES.

10.1 General. Every station, bus stop, bus stop pad, terminal, building or other transportation facility, shall comply with the applicable provisions of 4.1 through 4.35, sections 5 through 9, and the applicable provisions of this section. The exceptions for elevators in 4.1.3(5), exception 1 and 4.1.6(1)(k) do not apply to a terminal, depot, or other station used for specified public transportation, or an airport passenger terminal, or facilities subject to Title II.

10.2 Bus Stops and Terminals.

10.2.1 New Construction.

(1) Where new bus stop pads are constructed at bus stops, bays or other areas where a lift or ramp is to be deployed, they shall have a firm, stable surface; a minimum clear length of 96 inches (measured from the curb or vehicle roadway edge) and a minimum clear width of 60 inches (measured parallel to the vehicle roadway) to the maximum extent allowed by legal or site constraints; and shall be connected to streets, sidewalks or pedestrian paths by an accessible route complying with 4.3 and 4.4. The slope of the pad parallel to the roadway shall, to the extent practicable, be the same as the roadway. For water drainage, a maximum slope of 1:50 (2%) perpendicular to the roadway is allowed.

(2) Where provided, new or replaced bus shelters shall be installed or positioned so as to permit a wheelchair or mobility aid user to enter from the public way and to reach a location, having a minimum clear floor area of 30 inches by 48 inches, entirely within the perimeter of the shelter. Such shelters shall be connected by an accessible route to the boarding area provided under paragraph (1) of this section.

(3) Where provided, all new bus route identification signs shall comply with 4.30.5. In addition, to the maximum extent practicable, all new bus route identification signs shall comply with 4.30.2 and 4.30.3. Signs

10.3 Fixed Facilities and Stations

that are sized to the maximum dimensions permitted under legitimate local, state or federal regulations or ordinances shall be considered in compliance with 4.30.2 and 4.30.3 for purposes of this section.

EXCEPTION: Bus schedules, timetables, or maps that are posted at the bus stop or bus bay are not required to comply with this provision.

10.2.2 Bus Stop Siting and Alterations.

(1) Bus stop sites shall be chosen such that, to the maximum extent practicable, the areas where lifts or ramps are to be deployed comply with section 10.2.1(1) and (2).

(2) When new bus route identification signs are installed or old signs are replaced, they shall comply with the requirements of 10.2.1(3).

10.3 Fixed Facilities and Stations.

10.3.1 New Construction. New stations in rapid rail, light rail, commuter rail, intercity bus, intercity rail, high speed rail, and other fixed guideway systems (e.g., automated guideway transit, monorails, etc.) shall comply with the following provisions, as applicable:

(1) Elements such as ramps, elevators or other circulation devices, fare vending or other ticketing areas, and fare collection areas shall be placed to minimize the distance which wheelchair users and other persons who cannot negotiate steps may have to travel compared to the general public. The circulation path, including an accessible entrance and an accessible route, for persons with disabilities shall, to the maximum extent practicable, coincide with the circulation path for the general public. Where the circulation path is different, signage complying with 4.30.1, 4.30.2, 4.30.3, 4.30.5, and 4.30.7(1) shall be provided to indicate direction to and identify the accessible entrance and accessible route.

(2) In lieu of compliance with 4.1.3(8), at least one entrance to each station shall comply with 4.14, Entrances. If different entrances to a station serve different transportation fixed routes or groups of fixed routes, at least one entrance serving each group or route shall comply with 4.14, Entrances. All accessible entrances shall, to the maximum extent practicable, coincide with those used by the majority of the general public.

(3) Direct connections to commercial, retail, or residential facilities shall have an accessible route complying with 4.3 from the point of connection to boarding platforms and all transportation system elements used by the public. Any elements provided to facilitate future direct connections shall be on an accessible route connecting boarding platforms and all transportation system elements used by the public.

(4) Where signs are provided at entrances to stations identifying the station or the entrance, or both, at least one sign at each entrance shall comply with 4.30.4 and 4.30.6. Such signs shall be placed in uniform locations at entrances within the transit system to the maximum extent practicable.

EXCEPTION: Where the station has no defined entrance, but signage is provided, then the accessible signage shall be placed in a central location.

(5) Stations covered by this section shall have identification signs complying with 4.30.1, 4.30.2, 4.30.3, and 4.30.5. Signs shall be placed at frequent intervals and shall be clearly visible from within the vehicle on both sides when not obstructed by another train. When station identification signs are placed close to vehicle windows (i.e., on the side opposite from boarding) each shall have the top of the highest letter or symbol below the top of the vehicle window and the bottom of the lowest letter or symbol above the horizontal mid-line of the vehicle window.

(6) Lists of stations, routes, or destinations served by the station and located on boarding areas, platforms, or mezzanines shall comply with 4.30.1, 4.30.2, 4.30.3, and 4.30.5. A minimum of one sign identifying the specific station and complying with 4.30.4 and 4.30.6 shall be provided on each platform or boarding area. All signs referenced in this paragraph shall, to the maximum extent practicable, be placed in uniform locations within the transit system.

10.3 Fixed Facilities and Stations

(7)* Automatic fare vending, collection and adjustment (e.g., add-fare) systems shall comply with 4.34.2, 4.34.3, and 4.34.4. At each accessible entrance such devices shall be located on an accessible route. If self-service fare collection devices are provided for the use of the general public, at least one accessible device for entering, and at least one for exiting, unless one device serves both functions, shall be provided at each accessible point of entry or exit. Accessible fare collection devices shall have a minimum clear opening width of 32 inches; shall permit passage of a wheelchair; and, where provided, coin or card slots and controls necessary for operation shall comply with 4.27. Gates which must be pushed open by wheelchair or mobility aid users shall have a smooth continuous surface extending from 2 inches above the floor to 27 inches above the floor and shall comply with 4.13. Where the circulation path does not coincide with that used by the general public, accessible fare collection systems shall be located at or adjacent to the accessible point of entry or exit.

(8) Platform edges bordering a drop-off and not protected by platform screens or guard rails shall have a detectable warning. Such detectable warnings shall comply with 4.29.2 and shall be 24 inches wide running the full length of the platform drop-off.

(9) In stations covered by this section, rail-to-platform height in new stations shall be coordinated with the floor height of new vehicles so that the vertical difference, measured when the vehicle is at rest, is within plus or minus 5/8 inch under normal passenger load conditions. For rapid rail, light rail, commuter rail, high speed rail, and intercity rail systems in new stations, the horizontal gap, measured when the new vehicle is at rest, shall be no greater than 3 inches. For slow moving automated guideway "people mover" transit systems, the horizontal gap in new stations shall be no greater than 1 inch.

EXCEPTION 1: Existing vehicles operating in new stations may have a vertical difference with respect to the new platform within plus or minus 1-1/2 inches.

EXCEPTION 2: In light rail, commuter rail and intercity rail systems where it is not operationally or structurally feasible to meet the horizontal gap or vertical difference requirements, mini-high platforms, car-borne or platform-mounted lifts, ramps or bridge plates, or similar manually deployed devices, meeting the applicable requirements of 36 CFR part 1192, or 49 CFR part 38 shall suffice.

(10) Stations shall not be designed or constructed so as to require persons with disabilities to board or alight from a vehicle at a location other than one used by the general public.

(11) Illumination levels in the areas where signage is located shall be uniform and shall minimize glare on signs. Lighting along circulation routes shall be of a type and configuration to provide uniform illumination.

(12) Text Telephones: The following shall be provided in accordance with 4.31.9:

(a) If an interior public pay telephone is provided in a transit facility (as defined by the Department of Transportation) at least one interior public text telephone shall be provided in the station.

(b) Where four or more public pay telephones serve a particular entrance to a rail station and at least one is in an interior location, at least one interior public text telephone shall be provided to serve that entrance. Compliance with this section constitutes compliance with section 4.1.3(17)(c).

(13) Where it is necessary to cross tracks to reach boarding platforms, the route surface shall be level and flush with the rail top at the outer edge and between the rails, except for a maximum 2-1/2 inch gap on the inner edge of each rail to permit passage of wheel flanges. Such crossings shall comply with 4.29.5. Where gap reduction is not practicable, an above-grade or below-grade accessible route shall be provided.

(14) Where public address systems are provided to convey information to the public in terminals, stations, or other fixed facilities, a means of conveying the same or equivalent information to persons with hearing loss or who are deaf shall be provided.

10.3.2 Existing Facilities: Key Stations.

(15) Where clocks are provided for use by the general public, the clock face shall be uncluttered so that its elements are clearly visible. Hands, numerals, and/or digits shall contrast with the background either light-on-dark or dark-on-light. Where clocks are mounted overhead, numerals and/or digits shall comply with 4.30.3. Clocks shall be placed in uniform locations throughout the facility and system to the maximum extent practicable.

(16) Where provided in below grade stations, escalators shall have a minimum clear width of 32 inches. At the top and bottom of each escalator run, at least two contiguous treads shall be level beyond the comb plate before the risers begin to form. All escalator treads shall be marked by a strip of clearly contrasting color, 2 inches in width, placed parallel to and on the nose of each step. The strip shall be of a material that is at least as slip resistant as the remainder of the tread. The edge of the tread shall be apparent from both ascending and descending directions.

(17) Where provided, elevators shall be glazed or have transparent panels to allow an unobstructed view both in to and out of the car. Elevators shall comply with 4.10.

EXCEPTION: Elevator cars with a clear floor area in which a 60 inch diameter circle can be inscribed may be substituted for the minimum car dimensions of 4.10, Fig. 22.

(18) Where provided, ticketing areas shall permit persons with disabilities to obtain a ticket and check baggage and shall comply with 7.2.

(19) Where provided, baggage check-in and retrieval systems shall be on an accessible route complying with 4.3, and shall have space immediately adjacent complying with 4.2. If unattended security barriers are provided, at least one gate shall comply with 4.13. Gates which must be pushed open by wheelchair or mobility aid users shall have a smooth continuous surface extending from 2 inches above the floor to 27 inches above the floor.

10.3.2 Existing Facilities: Key Stations.

(1) Rapid, light and commuter rail key stations, as defined under criteria established by the Department of Transportation in subpart C of 49 CFR part 37 and existing intercity rail stations shall provide at least one accessible route from an accessible entrance to those areas necessary for use of the transportation system.

(2) The accessible route required by 10.3.2(1) shall include the features specified in 10.3.1 (1), (4)-(9), (11)-(15), and (17)-(19).

(3) Where technical infeasibility in existing stations requires the accessible route to lead from the public way to a paid area of the transit system, an accessible fare collection system, complying with 10.3.1(7), shall be provided along such accessible route.

(4) In light rail, rapid rail and commuter rail key stations, the platform or a portion thereof and the vehicle floor shall be coordinated so that the vertical difference, measured when the vehicle is at rest, within plus or minus 1-1/2 inches under all normal passenger load conditions, and the horizontal gap, measured when the vehicle is at rest, is no greater than 3 inches for at least one door of each vehicle or car required to be accessible by 49 CFR part 37.

EXCEPTION 1: Existing vehicles retrofitted to meet the requirements of 49 CFR 37.93 (one-car-per-train rule) shall be coordinated with the platform such that, for at least one door, the vertical difference between the vehicle floor and the platform, measured when the vehicle is at rest with 50% normal passenger capacity, is within plus or minus 2 inches and the horizontal gap is no greater than 4 inches.

EXCEPTION 2: Where it is not structurally or operationally feasible to meet the horizontal gap or vertical difference requirements, mini-high platforms, car-borne or platform mounted lifts, ramps or bridge plates, or similar manually deployed devices, meeting the applicable requirements of 36 CFR Part 1192 shall suffice.

(5) New direct connections to commercial, retail, or residential facilities shall, to the maximum extent feasible, have an accessible route complying with 4.3 from the point of connection to boarding platforms and all transportation system elements used by the public. Any elements provided to facilitate future direct connections shall be on an accessible route connecting boarding platforms and all transportation system elements used by the public.

10.3.3 Existing Facilities: Alterations.

(1) For the purpose of complying with 4.1.6(2) Alterations to an Area Containing a Primary Function, an area of primary function shall be as defined by applicable provisions of 49 CFR 37.43(c) (Department of Transportation's ADA Rule) or 28 CFR 36.403 (Department of Justice's ADA Rule).

10.4. Airports.

10.4.1 New Construction.

(1) Elements such as ramps, elevators or other vertical circulation devices, ticketing areas, security checkpoints, or passenger waiting areas shall be placed to minimize the distance which wheelchair users and other persons who cannot negotiate steps may have to travel compared to the general public.

(2) The circulation path, including an accessible entrance and an accessible route, for persons with disabilities shall, to the maximum extent practicable, coincide with the circulation path for the general public. Where the circulation path is different, directional signage complying with 4.30.1, 4.30.2, 4.30.3 and 4.30.5 shall be provided which indicates the location of the nearest accessible entrance and its accessible route.

(3) Ticketing areas shall permit persons with disabilities to obtain a ticket and check baggage and shall comply with 7.2.

(4) Where public pay telephones are provided, and at least one is at an interior location, a public text telephone shall be provided in compliance with 4.31.9. Additionally, if four or more public pay telephones are located in any of the following locations, at least one public text telephone shall also be provided in that location:

(a) a main terminal outside the security areas;
(b) a concourse within the security areas; or
(c) a baggage claim area in a terminal.

Compliance with this section constitutes compliance with section 4.1.3(17)(c).

(5) Baggage check-in and retrieval systems shall be on an accessible route complying with 4.3, and shall have space immediately adjacent complying with 4.2.4. If unattended security barriers are provided, at least one gate shall comply with 4.13. Gates which must be pushed open by wheelchair or mobility aid users shall have a smooth continuous surface extending from 2 inches above the floor to 27 inches above the floor.

(6) Terminal information systems which broadcast information to the general public through a public address system shall provide a means to provide the same or equivalent information to persons with a hearing loss or who are deaf. Such methods may include, but are not limited to, visual paging systems using video monitors and computer technology. For persons with certain types of hearing loss such methods may include, but are not limited to, an assistive listening system complying with 4.33.7.

(7) Where clocks are provided for use by the general public the clock face shall be uncluttered so that its elements are clearly visible. Hands, numerals, and/or digits shall contrast with their background either light-on-dark or dark-on-light. Where clocks are mounted overhead, numerals and/or digits shall comply with 4.30.3. Clocks shall be placed in uniform locations throughout the facility to the maximum extent practicable.

(8) Security Systems. [Reserved]

10.5 Boat and Ferry Docks.

[Reserved]

APPENDIX

This appendix contains *materials of an advisory nature* and provides additional information that should help the reader to understand the minimum requirements of the *guidelines* or to design buildings or facilities for greater accessibility. The paragraph numbers correspond to the sections or paragraphs of the *guideline* to which the material relates and are therefore not consecutive (for example, A4.2.1 contains additional information relevant to 4.2.1). Sections *of the guidelines* for which additional material appears in this appendix have been indicated by an asterisk. *Nothing in this appendix shall in any way obviate any obligation to comply with the requirements of the guidelines itself.*

A2.2 Equivalent Facilitation. *Specific examples of equivalent facilitation are found in the following sections:*

4.1.6(3)(c)	*Elevators in Alterations*
4.31.9	*Text Telephones*
7.2	*Sales and Service Counters, Teller Windows, Information Counters*
9.1.4	*Classes of Sleeping Accommodations*
9.2.2(6)(d)	*Requirements for Accessible Units, Sleeping Rooms, and Suites*

A4.1.1 Application.

A4.1.1(3) Areas Used Only by Employees as Work Areas. *Where there are a series of individual work stations of the same type (e.g., laboratories, service counters, ticket booths), 5%, but not less than one, of each type of work station should be constructed so that an individual with disabilities can maneuver within the work stations. Rooms housing individual offices in a typical office building must meet the requirements of the guidelines concerning doors, accessible routes, etc. but do not need to allow for maneuvering space around individual desks. Modifications required to permit maneuvering within the work area may be accomplished as a reasonable accommodation to individual employees with disabilities under Title I of the ADA. Consideration should also be given to placing shelves in employee work areas at a convenient height for accessibility or installing commercially available shelving that is adjustable so that reasonable accommodations can be made in the future.*

If work stations are made accessible they should comply with the applicable provisions of 4.2 through 4.35.

A4.1.2 Accessible Sites and Exterior Facilities: New Construction.

A4.1.2(5)(e) Valet Parking. *Valet parking is not always usable by individuals with disabilities. For instance, an individual may use a type of vehicle controls that render the regular controls inoperable or the driver's seat in a van may be removed. In these situations, another person cannot park the vehicle. It is recommended that some self-parking spaces be provided at valet parking facilities for individuals whose vehicles cannot be parked by another person and that such spaces be located on an accessible route to the entrance of the facility.*

A4.1.3 Accessible Buildings: New Construction.

A4.1.3(5) *Only full passenger elevators are covered by the accessibility provisions of 4.10. Materials and equipment hoists, freight elevators not intended for passenger use, dumbwaiters, and construction elevators are not covered by these guidelines. If a building is exempt from the elevator requirement, it is not necessary to provide a platform lift or other means of vertical access in lieu of an elevator.*

Under Exception 4, platform lifts are allowed where existing conditions make it impractical to install a ramp or elevator. Such conditions generally occur where it is essential to provide access to small raised or lowered areas where space may not be available for a ramp. Examples include, but are not limited to, raised pharmacy platforms, commercial offices raised above a sales floor, or radio and news booths.

A4.1.3(9) *Supervised automatic sprinkler systems have built in signals for monitoring features of the system such as the opening and closing of water control valves, the power supplies for needed pumps, water tank levels, and for indicating conditions that will impair the satisfactory operation of the sprinkler system.*

A4.2 Space Allowances and Reach Ranges

Because of these monitoring features, supervised automatic sprinkler systems have a high level of satisfactory performance and response to fire conditions.

A4.1.3(10) *If an odd number of drinking fountains is provided on a floor, the requirement in 4.1.3(10)(b) may be met by rounding down the odd number to an even number and calculating 50% of the even number. When more than one drinking fountain on a floor is required to comply with 4.15, those fountains should be dispersed to allow wheelchair users convenient access. For example, in a large facility such as a convention center that has water fountains at several locations on a floor, the accessible water fountains should be located so that wheelchair users do not have to travel a greater distance than other people to use a drinking fountain.*

A4.1.3(17)(b) *In addition to the requirements of section 4.1.3(17)(b), the installation of additional volume controls is encouraged. Volume controls may be installed on any telephone.*

A4.1.3(19)(a) *Readily removable or folding seating units may be installed in lieu of providing an open space for wheelchair users. Folding seating units are usually two fixed seats that can be easily folded into a fixed center bar to allow for one or two open spaces for wheelchair users when necessary. These units are more easily adapted than removable seats which generally require the seat to be removed in advance by the facility management.*

Either a sign or a marker placed on seating with removable or folding arm rests is required by this section. Consideration should be given for ensuring identification of such seats in a darkened theater. For example, a marker which contrasts (light on dark or dark on light) and which also reflects light could be placed on the side of such seating so as to be visible in a lighted auditorium and also to reflect light from a flashlight.

A4.1.6 Accessible Buildings: Alterations.

A4.1.6(1)(h) *When an entrance is being altered, it is preferable that those entrances being altered be made accessible to the extent feasible.*

A4.2 Space Allowances and Reach Ranges.

A4.2.1 Wheelchair Passage Width.

(1) Space Requirements for Wheelchairs. Many persons who use wheelchairs need a 30 in (760 mm) clear opening width for doorways, gates, and the like, when the latter are entered head-on. If the *person* is unfamiliar with a building, if competing traffic is heavy, if sudden or frequent movements are needed, or if the wheelchair must be turned at an opening, then greater clear widths are needed. For most situations, the addition of an inch of leeway on either side is sufficient. Thus, a minimum clear width of 32 in (815 mm) will provide adequate clearance. However, when an opening or a restriction in a passageway is more than 24 in (610 mm) long, it is essentially a passageway and must be at least 36 in (915 mm) wide.

(2) Space Requirements for Use of Walking Aids. Although people who use walking aids can maneuver through clear width openings of 32 in (815 mm), they need 36 in (915 mm) wide passageways and walks for comfortable gaits. Crutch tips, often extending down at a wide angle, are a hazard in narrow passageways where they might not be seen by other pedestrians. Thus, the 36 in (915 mm) width provides a safety allowance both for the person *with a disability* and for others.

(3) Space Requirements for Passing. Able-bodied *persons* in winter clothing, walking

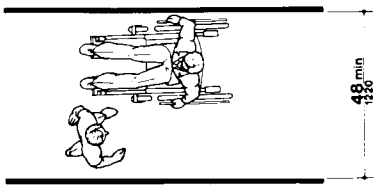

Fig. A1
Minimum Passage Width for One Wheelchair and One Ambulatory Person

A4.2 Space Allowances and Reach Ranges

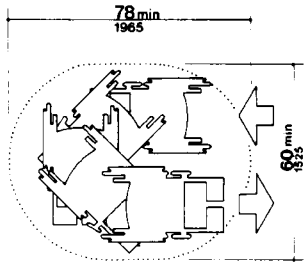

Fig. A2
Space Needed for Smooth U-Turn in a Wheelchair

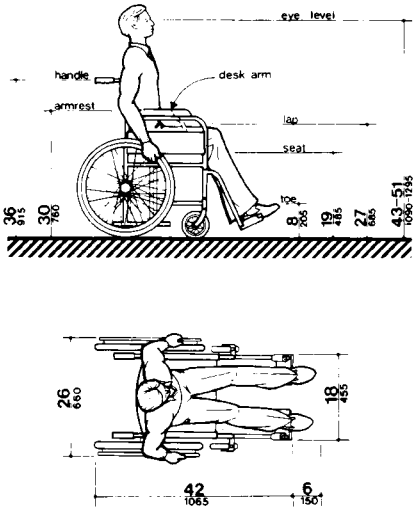

NOTE: Footrests may extend further for tall people

Fig. A3
Dimensions of Adult-Sized Wheelchairs

straight ahead with arms swinging, need 32 in (815 mm) of width, which includes 2 in (50 mm) on either side for sway, and another 1 in (25 mm) tolerance on either side for clearing nearby objects or other pedestrians. Almost all wheelchair users and those who use walking aids can also manage within this 32 in (815 mm) width for short distances. Thus, two streams of traffic can pass in 64 in (1625 mm) in a comfortable flow. Sixty inches (1525 mm) provides a minimum width for a somewhat more restricted flow. If the clear width is less than 60 in (1525 mm), two wheelchair users will not be able to pass but will have to seek a wider place for passing. Forty-eight inches (1220 mm) is the minimum width needed for an ambulatory person to pass a nonambulatory or semi-ambulatory person. Within this 48 in (1220 mm) width, the ambulatory person will have to twist to pass a wheelchair user, a person with a *service animal*, or a

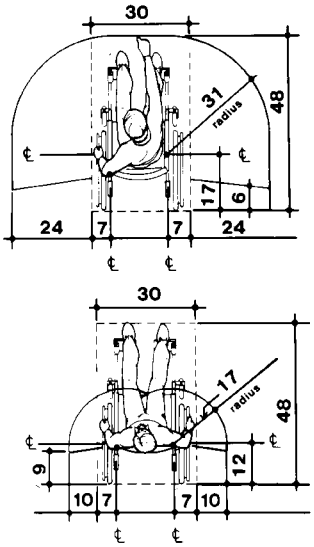

Fig. A3 (a)

A3

A4.3 Accessible Route

semi-ambulatory person. There will be little leeway for swaying or missteps (see Fig. A1).

A4.2.3 Wheelchair Turning Space. *These guidelines specify* a minimum space of 60 in (1525 mm) diameter *or a 60 in by 60 in (1525 mm by 1525 mm) T-shaped space* for a pivoting 180-degree turn of a wheelchair. This space is usually satisfactory for turning around, but many people will not be able to turn without repeated tries and bumping into surrounding objects. The space shown in Fig. A2 will allow most wheelchair users to complete U-turns without difficulty.

A4.2.4 Clear Floor or Ground Space for Wheelchairs. The wheelchair and user shown in Fig. A3 represent typical dimensions for a large adult male. The space requirements in this *guideline* are based upon maneuvering clearances that will accommodate most wheelchairs. Fig. A3 provides a uniform reference for design not covered by this *guideline.*

A4.2.5 & A4.2.6 Reach. *Reach ranges for persons seated in wheelchairs may be further clarified by Fig. A3(a). These drawings approximate in the plan view the information shown in Fig. 4, 5, and 6.*

A4.3 Accessible Route.

A4.3.1 General.

(1) Travel Distances. Many people with mobility impairments can move at only very slow speeds; for many, traveling 200 ft (61 m) could take about 2 minutes. This assumes a rate of about 1.5 ft/s (455 mm/s) on level ground. It also assumes that the traveler would move continuously. However, on trips over 100 ft (30 m), disabled people are apt to rest frequently, which substantially increases their trip times. Resting periods of 2 minutes for every 100 ft (30 m) can be used to estimate travel times for people with severely limited stamina. In inclement weather, slow progress and resting can greatly increase a disabled person's exposure to the elements.

(2) Sites. Level, indirect routes or those with running slopes lower than 1:20 can sometimes provide more convenience than direct routes with maximum allowable slopes or with ramps.

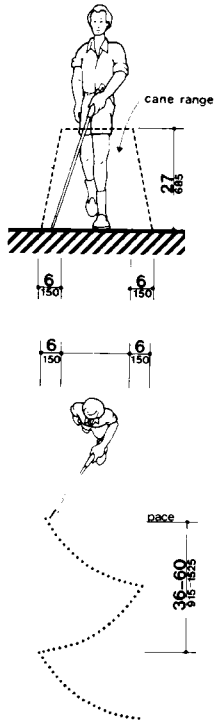

Fig. A4
Cane Technique

A4.3.10 Egress. Because people with disabilities may visit, be employed or be a resident in any building, emergency management plans with specific provisions to ensure their safe evacuation also play an essential role in fire safety and life safety.

A4.3.11.3 Stairway Width. *A 48 inch (1220 mm) wide exit stairway is needed to allow assisted evacuation (e.g., carrying a person in a wheelchair) without encroaching on the exit path for ambulatory persons.*

A4.3.11.4 Two-way Communication. *It is essential that emergency communication not be dependent on voice communications alone because the safety of people with hearing or speech impairments could be jeopardized. The visible signal requirement could be satisfied with something as simple as a button in the area of rescue assistance that lights, indicating that help is on the way, when the message is answered at the point of entry.*

A4.4 Protruding Objects.

A4.4.1 General. *Service animals* are trained to recognize and avoid hazards. However, most people with severe impairments of vision use the long cane as an aid to mobility. The two principal cane techniques are the touch technique, where the cane arcs from side to side and touches points outside both shoulders; and the diagonal technique, where the cane is held in a stationary position diagonally across the body with the cane tip touching or just above the ground at a point outside one shoulder and the handle or grip extending to a point outside the other shoulder. The touch technique is used primarily in uncontrolled areas, while the diagonal technique is used primarily in certain limited, controlled, and familiar environments. Cane users are often trained to use both techniques.

Potential hazardous objects are noticed only if they fall within the detection range of canes (see Fig. A4). Visually impaired people walking toward an object can detect an overhang if its lowest surface is not higher than 27 in (685 mm). When walking alongside *protruding* objects, they cannot detect overhangs. Since proper cane and *service animal* techniques keep people away from the edge of a path or from walls, a slight overhang of no more than 4 in (100 mm) is not hazardous.

A4.5 Ground and Floor Surfaces.

A4.5.1 General. *People who have difficulty walking or* maintaining balance *or who use crutches, canes, or walkers,* and those with restricted gaits are particularly sensitive to slipping and tripping hazards. For such people, a stable and regular surface is necessary for safe walking, particularly on stairs. Wheelchairs can be propelled most easily on surfaces that are hard, stable, and regular. Soft loose surfaces such as shag carpet, loose sand or gravel, wet clay, and irregular surfaces such as cobblestones can significantly impede wheelchair movement.

Slip resistance is based on the frictional force necessary to keep a shoe heel or crutch tip from slipping on a walking surface under conditions likely to be found on the surface. *While the dynamic coefficient of friction during walking varies in a complex and non-uniform way, the static coefficient of friction, which can be measured in several ways, provides a close approximation of the slip resistance of a surface. Contrary to popular belief, some slippage is necessary to walking, especially for persons with restricted gaits; a truly "non-slip" surface could not be negotiated.*

The Occupational Safety and Health Administration recommends that walking surfaces have a static coefficient of friction of 0.5. A research project sponsored by the Architectural and Transportation Barriers Compliance Board (Access Board) conducted tests with persons with disabilities and concluded that a higher coefficient of friction was needed by such persons. A static coefficient of friction of 0.6 is recommended for accessible routes and 0.8 for ramps.

It is recognized that the coefficient of friction varies considerably due to the presence of contaminants, water, floor finishes, and other factors not under the control of the designer or builder and not subject to design and construction guidelines and that compliance would be difficult to measure on the building site. Nevertheless, many common building materials suitable for flooring are now labeled with information on the static coefficient of friction. While it may not be possible to compare one product directly with another, or to guarantee a constant measure, builders and designers are encouraged to specify materials with appropriate values. As more products include information on slip resistance, improved uniformity in measurement and specification is likely. The Access Board's advisory guidelines on Slip Resistant Surfaces provides additional information on this subject.

Cross slopes on walks and ground or floor surfaces can cause considerable difficulty in propelling a wheelchair in a straight line.

A4.6 Parking and Passenger Loading Zones

A4.5.3 Carpet. Much more needs to be done in developing both quantitative and qualitative criteria for carpeting *(i.e., problems associated with texture and weave need to be studied).* However, certain functional characteristics are well established. When both carpet and padding are used, it is desirable to have minimum movement (preferably none) between the floor and the pad and the pad and the carpet which would allow the carpet to hump or warp. In heavily trafficked areas, a thick, soft (plush) pad or cushion, particularly in combination with long carpet pile, makes it difficult for individuals in wheelchairs and those with other ambulatory disabilities to get about. Firm carpeting can be achieved through proper selection and combination of pad and carpet, sometimes with the elimination of the pad or cushion, and with proper installation. *Carpeting designed with a weave that causes a zig-zag effect when wheeled across is strongly discouraged.*

A4.6 Parking and Passenger Loading Zones.

A4.6.3 Parking Spaces. *The increasing use of vans with side-mounted lifts or ramps by persons with disabilities has necessitated some revisions in specifications for parking spaces and adjacent access aisles. The typical accessible parking space is 96 in (2440 mm) wide with an adjacent 60 in (1525 mm) access aisle. However, this aisle does not permit lifts or ramps to be deployed and still leave room for a person using a wheelchair or other mobility aid to exit the lift platform or ramp. In tests conducted with actual lift/van/wheelchair combinations, (under a Board-sponsored Accessible Parking and Loading Zones Project) researchers found that a space and aisle totaling almost 204 in (5180 mm) wide was needed to deploy a lift and exit conveniently. The "van accessible" parking space required by these guidelines provides a 96 in (2440 mm) wide space with a 96 in (2440 mm) adjacent access aisle which is just wide enough to maneuver and exit from a side mounted lift. If a 96 in (2440 mm) access aisle is placed between two spaces, two "van accessible" spaces are created. Alternatively, if the wide access aisle is provided at the end of a row (an area often unused), it may be possible to provide the wide access aisle without additional space (see Fig. A5(a).*

A sign is needed to alert van users to the presence of the wider aisle, but the space is not intended to be restricted only to vans.

"Universal" Parking Space Design. An alternative to the provision of a percentage of spaces with a wide aisle, and the associated need to include additional signage, is the use of what has been called the "universal" parking space design. Under this design, all accessible spaces are 132 in (3350 mm) wide with a 60 in (1525 mm) access aisle (see Fig. A5(b)). One

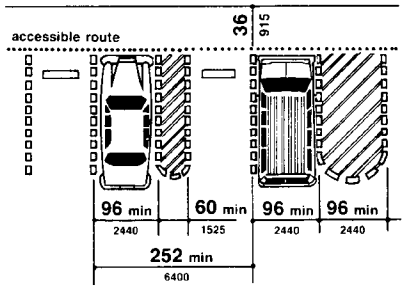

(a)
Van Accessible Space at End Row

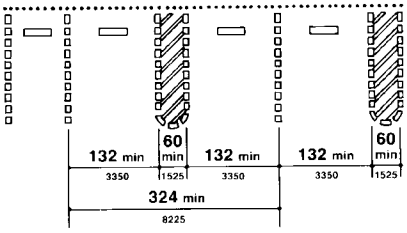

(b)
Universal Parking Space Design

Fig. A5
Parking Space Alternatives

advantage to this design is that no additional signage is needed because all spaces can accommodate a van with a side-mounted lift or ramp. Also, there is no competition between cars and vans for spaces since all spaces can accommodate either. Furthermore, the wider space permits vehicles to park to one side or the other within the 132 in (3350 mm) space to allow persons to exit and enter the vehicle on either the driver or passenger side, although, in some cases, this would require exiting or entering without a marked access aisle.

An essential consideration for any design is having the access aisle level with the parking space. Since a person with a disability, using a lift or ramp, must maneuver within the access aisle, the aisle cannot include a ramp or sloped area. The access aisle must be connected to an accessible route to the appropriate accessible entrance of a building or facility. The parking access aisle must either blend with the accessible route or have a curb ramp complying with 4.7. Such a curb ramp opening must be located within the access aisle boundaries, not within the parking space boundaries. Unfortunately, many facilities are designed with a ramp that is blocked when any vehicle parks in the accessible space. Also, the required dimensions of the access aisle cannot be restricted by planters, curbs or wheel stops.

A4.6.4 Signage. Signs designating parking places for disabled people can be seen from a driver's seat if the signs are mounted high enough above the ground and located at the front of a parking space.

A4.6.5 Vertical Clearance. High-top vans, which disabled people or transportation services often use, require higher clearances in parking garages than automobiles.

A4.8 Ramps.

A4.8.1 General. Ramps are essential for wheelchair users if elevators or lifts are not available to connect different levels. However, some people who use walking aids have difficulty with ramps and prefer stairs.

A4.8.2 Slope and Rise. *Ramp slopes between 1:16 and 1:20 are preferred.* The ability to manage an incline is related to both its slope and its length. Wheelchair users with disabilities affecting *their* arms or with low stamina have serious difficulty using inclines. Most ambulatory people and most people who use wheelchairs can manage a slope of 1:16. Many people cannot manage a slope of 1:12 for 30 ft (9 m).

A4.8.4 Landings. *Level landings are essential toward maintaining an aggregate slope that complies with these guidelines. A ramp landing that is not level causes individuals using wheelchairs to tip backward or bottom out when the ramp is approached.*

A4.8.5 Handrails. The requirements for stair and ramp handrails in this *guideline* are for adults. When children are principal users in a building or facility, a second set of handrails at an appropriate height can assist them and aid in preventing accidents.

A4.9 Stairs.

A4.9.1 Minimum Number. *Only interior and exterior stairs connecting levels that are not connected by an elevator, ramp, or other accessible means of vertical access have to comply with 4.9.*

A4.10 Elevators.

A4.10.6 Door Protective and Reopening Device. The required door reopening device would hold the door open for 20 seconds if the doorway remains obstructed. After 20 seconds, the door may begin to close. However, if designed in accordance with *ASME A17.1-1990*, the door closing movement could still be stopped if a person or object exerts sufficient force at any point on the door edge.

A4.10.7 Door and Signal Timing for Hall Calls. This paragraph allows variation in the location of call buttons, advance time for warning signals, and the door-holding period used to meet the time requirement.

A4.10.12 Car Controls. Industry-wide standardization of elevator control panel design would make all elevators significantly more convenient for use by people with severe visual impairments. In many cases, it will be possible to locate the highest control on elevator panels within 48 in (1220 mm) from the floor.

A4.11 Platform Lifts *(Wheelchair Lifts)*

A4.10.13 Car Position Indicators. A special button may be provided that would activate the audible signal within the given elevator only for the desired trip, rather than maintaining the audible signal in constant operation.

A4.10.14 Emergency Communications. A device that requires no handset is easier to use by people who have difficulty reaching. *Also, small handles on handset compartment doors are not usable by people who have difficulty grasping.*

Ideally, emergency two-way communication systems should provide both voice and visual display intercommunication so that persons with hearing impairments and persons with vision impairments can receive information regarding the status of a rescue. A voice intercommunication system cannot be the only means of communication because it is not accessible to people with speech and hearing impairments. While a voice intercommunication system is not required, at a minimum, the system should provide both an audio and visual indication that a rescue is on the way.

A4.11 Platform Lifts *(Wheelchair Lifts).*

A4.11.2 Other Requirements. *Inclined stairway chairlifts, and inclined and vertical platform lifts (wheelchair lifts) are available* for short-distance, vertical transportation of people with disabilities. Care should be taken in selecting lifts *as some lifts are not equally suitable for use by both wheelchair users and semi-ambulatory individuals.*

A4.12 Windows.

A4.12.1 General. *Windows intended to be operated by occupants in accessible spaces should comply with 4.12.*

A4.12.2 Window Hardware. *Windows requiring pushing, pulling, or lifting to open (for example, double-hung, sliding, or casement and awning units without cranks) should require no more than 5 lbf (22.2 N) to open or close. Locks, cranks, and other window hardware should comply with 4.27.*

A4.13 Doors.

A4.13.8 Thresholds at Doorways. Thresholds and surface height changes in doorways are particularly inconvenient for wheelchair users who also have low stamina or restrictions in arm movement because complex maneuvering is required to get over the level change while operating the door.

A4.13.9 Door Hardware. Some disabled persons must push against a door with their chair or walker to open it. Applied kickplates on doors with closers can reduce required maintenance by withstanding abuse from wheelchairs and canes. To be effective, they should cover the door width, less approximately 2 in (51 mm), up to a height of 16 in (405 mm) from its bottom edge and be centered across the *width of the door.*

A4.13.10 Door Closers. Closers with delayed action features give a person more time to maneuver through doorways. They are particularly useful on frequently used interior doors such as entrances to toilet rooms.

A4.13.11 Door Opening Force. Although most people with disabilities can exert at least 5 lbf (22.2N), both pushing and pulling from a stationary position, a few people with severe disabilities cannot exert 3 lbf (13.13N). Although some people cannot manage the allowable forces in this guideline and many others have difficulty, door closers must have certain minimum closing forces to close doors satisfactorily. Forces for pushing or pulling doors open are measured with a push-pull scale under the following conditions:

(1) Hinged doors: Force applied perpendicular to the door at the door opener or 30 in (760 mm) from the hinged side, whichever is farther from the hinge.

(2) Sliding or folding doors: Force applied parallel to the door at the door pull or latch.

(3) Application of force: Apply force gradually so that the applied force does not exceed the resistance of the door. In high-rise buildings, air-pressure differentials may require a modification of this specification in order to meet the functional intent.

A4.13.12 Automatic Doors and Power-Assisted Doors. Sliding automatic doors do not need guard rails and are more convenient for wheelchair users and visually impaired people to use. If slowly opening automatic doors can be reactivated before their closing cycle is completed, they will be more convenient in busy doorways.

A4.15 Drinking Fountains and Water Coolers.

A4.15.2 Spout Height. *Two drinking fountains, mounted side by side or on a single post, are usable by people with disabilities and people who find it difficult to bend over.*

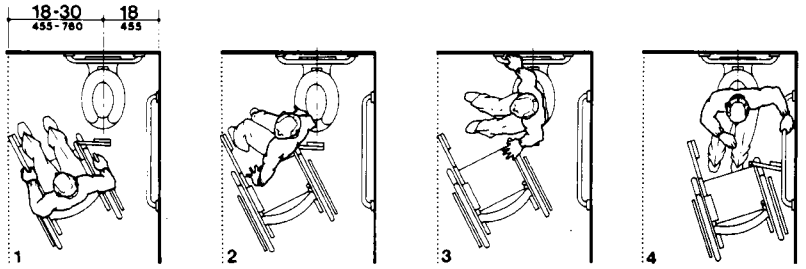

Takes transfer position, swings footrest out of the way, sets brakes.

Removes armrest, transfers.

Moves wheelchair out of the way, changes position (some people fold chair or pivot it 90° to the toilet).

Positions on toilet, releases brake.

(a)
Diagonal Approach

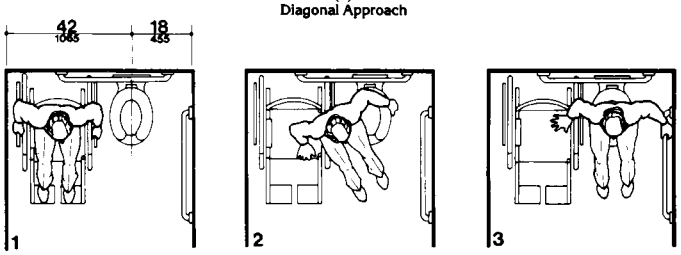

Takes transfer position, removes armrest, sets brakes.

Transfers.

Positions on toilet.

(b)
Side Approach

Fig. A6
Wheelchair Transfers

A4.16 Water Closets

A4.16 Water Closets.

A4.16.3 Height. Height preferences for toilet seats vary considerably among disabled people. Higher seat heights may be an advantage to some ambulatory disabled people, but are often a disadvantage for wheelchair users and others. Toilet seats 18 in (455 mm) high seem to be a reasonable compromise. Thick seats and filler rings are available to adapt standard fixtures to these requirements.

A4.16.4 Grab Bars. Fig. A6(a) and (b) show the diagonal and side approaches most commonly used to transfer from a wheelchair to a water closet. Some wheelchair users can transfer from the front of the toilet while others use a 90-degree approach. Most people who use the two additional approaches can also use either the diagonal approach or the side approach.

A4.16.5 Flush Controls. Flush valves and related plumbing can be located behind walls or to the side of the toilet, or a toilet seat lid can be provided if plumbing fittings are directly behind the toilet seat. Such designs reduce the chance of injury and imbalance caused by leaning back against the fittings. Flush controls for tank-type toilets have a standardized mounting location on the left side of the tank (facing the tank). Tanks can be obtained by special order with controls mounted on the right side. If administrative authorities require flush controls for flush valves to be located in a position that conflicts with the location of the rear grab bar, then that bar may be split or shifted toward the wide side of the toilet area.

A4.17 Toilet Stalls.

A4.17.3 Size and Arrangement. *This section requires use of the 60 in (1525 mm) standard stall (Figure 30(a)) and permits the 36 in (915 mm) or 48 in (1220 mm) wide alternate stall (Figure 30(b)) only in alterations where provision of the standard stall is technically infeasible or where local plumbing codes prohibit reduction in the number of fixtures. A standard stall provides a clear space on one side of the water closet to enable persons who use wheelchairs to perform a side or diagonal transfer from the wheelchair to the water closet. However, some persons with disabilities who use mobility aids such as walkers, canes or crutches are better able to use the two parallel grab bars in the 36 in (915 mm) wide alternate stall to achieve a standing position.*

In large toilet rooms, where six or more toilet stalls are provided, it is therefore required that a 36 in (915 mm) wide stall with parallel grab bars be provided in addition to the standard stall required in new construction. The 36 in (915 mm) width is necessary to achieve proper use of the grab bars; wider stalls would position the grab bars too far apart to be easily used and narrower stalls would position the grab bars too close to the water closet. Since the stall is primarily intended for use by persons using canes, crutches and walkers, rather than wheelchairs, the length of the stall could be conventional. The door, however, must swing outward to ensure a usable space for people who use crutches or walkers.

A4.17.5 Doors. To make it easier for wheelchair users to close toilet stall doors, doors can be provided with closers, spring hinges, or a pull bar mounted on the inside surface of the door near the hinge side.

A4.19 Lavatories and Mirrors.

A4.19.6 Mirrors. If mirrors are to be used by both ambulatory people and wheelchair users, then they must be at least 74 in (1880 mm) high at their topmost edge. A single full length mirror can accommodate all people, including children.

A4.21 Shower Stalls.

A4.21.1 General. Shower stalls that are 36 in by 36 in (915 mm by 915 mm) wide provide additional safety to people who have difficulty maintaining balance because all grab bars and walls are within easy reach. Seated people use the walls of 36 in by 36 in (915 mm by 915 mm) showers for back support. Shower stalls that are 60 in (1525 mm) wide and have no curb may increase usability of a bathroom by wheelchair users because the shower area provides additional maneuvering space.

A4.22 Toilet Rooms.

A4.22.3 Clear Floor Space. *In many small facilities, single-user restrooms may be the only*

A4.22 Toilet Rooms

facilities provided for all building users. In addition, the guidelines allow the use of "unisex" or "family" accessible toilet rooms in alterations when technical infeasibility can be demonstrated. Experience has shown that the provision of accessible "unisex" or single-user restrooms is a reasonable way to provide access for wheelchair users and any attendants, especially when attendants are of the opposite sex. Since these facilities have proven so useful, it is often considered advantageous to install a "unisex" toilet room in new facilities in addition to making the multi-stall restrooms accessible, especially in shopping malls, large auditoriums, and convention centers.

Figure 28 (section 4.16) provides minimum clear floor space dimensions for toilets in accessible "unisex" toilet rooms. The dotted lines designate the minimum clear floor space, depending on the direction of approach, required for wheelchair users to transfer onto the water closet. The dimensions of 48 in (1220 mm) and 60 in (1525 mm), respectively, correspond to the space required for the two common transfer approaches utilized by wheelchair users (see Fig. A6). It is important to keep in mind that the placement of the lavatory to the immediate side of the water closet will preclude the side approach transfer illustrated in Figure A6(b).

To accommodate the side transfer, the space adjacent to the water closet must remain clear of obstruction for 42 in (1065 mm) from the centerline of the toilet (Figure 28) and the lavatory must not be located within this clear space. A turning circle or T-turn, the clear floor space at the lavatory, and maneuvering space at the door must be considered when determining the possible wall locations. A privacy latch or other accessible means of ensuring privacy during use should be provided at the door.

RECOMMENDATIONS:

1. In new construction, accessible single-user restrooms may be desirable in some situations because they can accommodate a wide variety of building users. However, they cannot be used in lieu of making the multi-stall toilet rooms accessible as required.

2. Where strict compliance to the guidelines for accessible toilet facilities is technically infeasible in the alteration of existing facilities, accessible "unisex" toilets are a reasonable alternative.

3. In designing accessible single-user restrooms, the provisions of adequate space to allow a side transfer will provide accommodation to the largest number of wheelchair users.

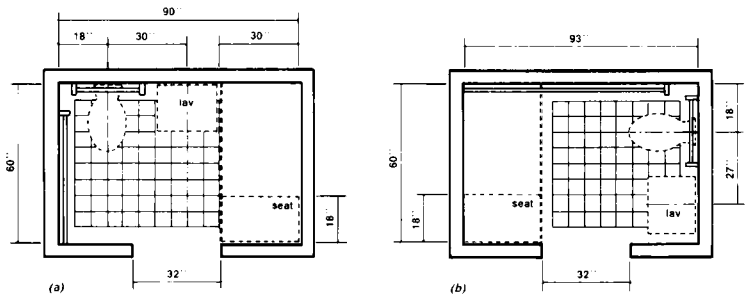

Fig. A7

A11

A4.23 Bathrooms, Bathing Facilities, and Shower Rooms

A4.23 Bathrooms, Bathing Facilities, and Shower Rooms.

A4.23.3 Clear Floor Space. *Figure A7 shows two possible configurations of a toilet room with a roll-in shower. The specific shower shown is designed to fit exactly within the dimensions of a standard bathtub. Since the shower does not have a lip, the floor space can be used for required maneuvering space. This would permit a toilet room to be smaller than would be permitted with a bathtub and still provide enough floor space to be considered accessible. This design can provide accessibility in facilities where space is at a premium (i.e., hotels and medical care facilities). The alternate roll-in shower (Fig. 57b) also provides sufficient room for the "T-turn" and does not require plumbing to be on more than one wall.*

A4.23.9 Medicine Cabinets. Other alternatives for storing medical and personal care items are very useful to disabled people. Shelves, drawers, and floor-mounted cabinets can be provided within the reach ranges of disabled people.

A4.26 Handrails, Grab Bars, and Tub and Shower Seats.

A4.26.1 General. Many disabled people rely heavily upon grab bars and handrails to maintain balance and prevent serious falls. Many people brace their forearms between supports and walls to give them more leverage and stability in maintaining balance or for lifting. The grab bar clearance of 1-1/2 in (38 mm) required in this guideline is a safety clearance to prevent injuries resulting from arms slipping through the openings. It also provides adequate gripping room.

A4.26.2 Size and Spacing of Grab Bars and Handrails. This specification allows for alternate shapes of handrails as long as they allow an opposing grip similar to that provided by a circular section of 1-1/4 in to 1-1/2 in (32 mm to 38 mm).

A4.27 Controls and Operating Mechanisms.

A4.27.3 Height. *Fig. A8 further illustrates*

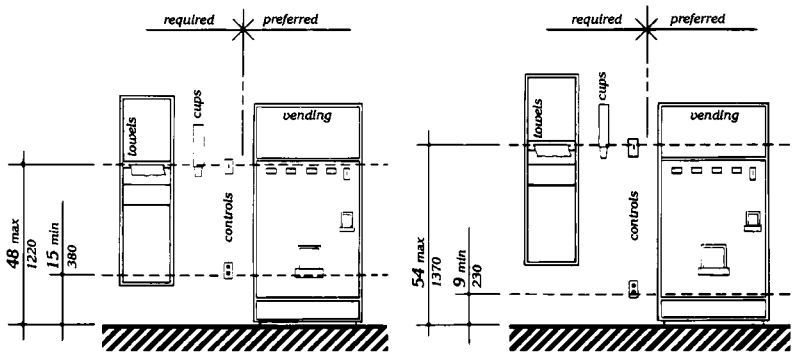

(a)
Forward Reach Possible

(b)
Side Reach Possible

Fig. A8
Control Reach Limitations

mandatory and advisory control mounting height provisions for typical equipment.

Electrical receptacles installed to serve individual appliances and not intended for regular or frequent use by building occupants are not required to be mounted within the specified reach ranges. Examples would be receptacles installed specifically for wall-mounted clocks, refrigerators, and microwave ovens.

A4.28 Alarms.

A4.28.2 Audible Alarms. Audible emergency signals must have an intensity and frequency that can attract the attention of individuals who have partial hearing loss. People over 60 years of age generally have difficulty perceiving frequencies higher than 10,000 Hz. *An alarm signal which has a periodic element to its signal, such as single stroke bells (clang-pause-clang-pause), hi-low (up-down-up-down) and fast whoop (on-off-on-off) are best. Avoid continuous or reverberating tones. Select a signal which has a sound characterized by three or four clear tones without a great deal of "noise" in between.*

A4.28.3 Visual Alarms. The specifications in this section do not preclude the use of zoned or coded alarm systems.

A4.28.4 Auxiliary Alarms. Locating visual emergency alarms in rooms where persons who are deaf may work or reside alone can ensure that they will always be warned when an emergency alarm is activated. To be effective, such devices must be located and oriented so that they will spread signals and reflections throughout a space or raise the overall light level sharply. *However, visual alarms alone are not necessarily the best means to alert sleepers. A study conducted by Underwriters Laboratory (UL) concluded that a flashing light more than seven times brighter was required (110 candela v. 15 candela, at the same distance) to awaken sleepers as was needed to alert awake subjects in a normal daytime illuminated room.*

For hotel and other rooms where people are likely to be asleep, a signal-activated vibrator placed between mattress and box spring or under a pillow was found by UL to be much more effective in alerting sleepers. Many readily available devices are sound-activated so that they could respond to an alarm clock, clock radio, wake-up telephone call or room smoke detector. Activation by a building alarm system can either be accomplished by a separate circuit activating an auditory alarm which would, in turn, trigger the vibrator or by a signal transmitted through the ordinary 110-volt outlet. Transmission of signals through the power line is relatively simple and is the basis of common, inexpensive remote light control systems sold in many department and electronic stores for home use. So-called "wireless" intercoms operate on the same principal.

A4.29 *Detectable* Warnings.

A4.29.2 *Detectable* Warnings on Walking Surfaces. *The material used to provide contrast should contrast by at least 70%. Contrast in percent is determined by:*

$$Contrast = [(B_1 - B_2)/B_1] \times 100$$

where B_1 = light reflectance value (LRV) of the lighter area
and B_2 = light reflectance value (LRV) of the darker area.

Note that in any application both white and black are never absolute; thus, B_1 never equals 100 and B_2 is always greater than 0.

A4.30 Signage.

A4.30.1 General. In building complexes where finding locations independently on a routine basis may be a necessity (for example, college campuses), tactile maps or prerecorded instructions can be very helpful to visually impaired people. Several maps and auditory instructions have been developed and tested for specific applications. The type of map or instructions used must be based on the information to be communicated, which depends highly on the type of buildings or users.

Landmarks that can easily be distinguished by visually impaired individuals are useful as orientation cues. Such cues include changes in illumination level, bright colors, unique patterns, wall murals, location of special equipment or other architectural features.

Many people with disabilities have limitations in movement of their heads and reduced peripheral vision. Thus, signage positioned

A4.30 Signage

perpendicular to the path of travel is easiest for them to notice. People can generally distinguish signage within an angle of 30 degrees to either side of the centerlines of their faces without moving their heads.

A4.30.2 Character Proportion. The legibility of printed characters is a function of the viewing distance, character height, the ratio of the stroke width to the height of the character, the contrast of color between character and background, and print font. The size of characters must be based upon the intended viewing distance. A severely nearsighted person may have to be much closer to recognize a character of a given size than a person with normal visual acuity.

A4.30.4 Raised *and Brailled* Characters *and Pictorial Symbol Signs (Pictograms).* *The standard dimensions for literary Braille are as follows:*

Dot diameter	*.059 in.*
Inter-dot spacing	*.090 in.*
Horizontal separation between cells	*.241 in.*
Vertical separation between cells	*.395 in.*

Raised borders around *signs containing* raised characters may make them confusing to read unless the border is set far away from the characters. *Accessible signage with descriptive materials about public buildings, monuments, and objects of cultural interest may not provide sufficiently detailed and meaningful information. Interpretive guides, audio tape devices, or other methods may be more effective in presenting such information.*

A4.30.5 Finish and Contrast. *An eggshell finish (11 to 19 degree gloss on 60 degree glossimeter) is recommended. Research indicates that signs are more legible for persons with low vision when characters contrast with their background by at least 70 percent. Contrast in percent shall be determined by:*

$$Contrast = [(B_1 - B_2)/B_1] \times 100$$

where B_1 = light reflectance value (LRV) of the lighter area
and B_2 = light reflectance value (LRV) of the darker area.

Note that in any application both white and black are never absolute; thus, B_1 never equals 100 and B_2 is always greater than 0.

The greatest readability is usually achieved through the use of light-colored characters or symbols on a dark background.

A4.30.7 Symbols of Accessibility for Different Types of Listening Systems. *Paragraph 4 of this section requires signage indicating the availability of an assistive listening system. An appropriate message should be displayed with the international symbol of access for hearing loss since this symbol conveys general accessibility for people with hearing loss. Some suggestions are:*

INFRARED
ASSISTIVE LISTENING SYSTEM
AVAILABLE
——PLEASE ASK——

AUDIO LOOP IN USE
TURN T-SWITCH FOR
BETTER HEARING
——OR ASK FOR HELP——

FM
ASSISTIVE LISTENING
SYSTEM AVAILABLE
——PLEASE ASK——

The symbol may be used to notify persons of the availability of other auxiliary aids and services such as: real time captioning, captioned note taking, sign language interpreters, and oral interpreters.

A4.30.8 Illumination Levels. *Illumination levels on the sign surface shall be in the 100 to 300 lux range (10 to 30 footcandles) and shall be uniform over the sign surface. Signs shall be located such that the illumination level on the surface of the sign is not significantly exceeded by the ambient light or visible bright lighting source behind or in front of the sign.*

A4.31 Telephones.

A4.31.3 Mounting Height. In localities where the dial-tone first system is in operation, calls can be placed at a coin telephone through the operator without inserting coins. The operator button is located at a height of 46 in (1170 mm) if the coin slot of the telephone is at 54 in (1370 mm). A generally available public telephone with a coin slot mounted lower on the equipment would allow universal installation of telephones at a height of 48 in (1220 mm) or less to all operable parts.

A4.31.9 Text Telephones. *A public text telephone may be an integrated text telephone pay phone unit or a conventional portable text telephone that is permanently affixed within, or adjacent to, the telephone enclosure. In order to be usable with a pay phone, a text telephone which is not a single integrated text telephone pay phone unit will require a shelf large enough (10 in (255mm) wide by 10 in (255 mm) deep with a 6 in (150 mm) vertical clearance minimum) to accommodate the device, an electrical outlet, and a power cord. Movable or portable text telephones may be used to provide equivalent facilitation. A text telephone should be readily available so that a person using it may access the text telephone easily and conveniently. As currently designed pocket-type text telephones for personal use do not accommodate a wide range of users. Such devices would not be considered substantially equivalent to conventional text telephones. However, in the future as technology develops this could change.*

A4.32 *Fixed or Built-in* Seating and Tables.

A4.32.4 Height of *Tables or Counters.* Different types of work require different *table or counter* heights for comfort and optimal performance. Light detailed work such as writing requires a *table or counter* close to elbow height for a standing person. Heavy manual work such as rolling dough requires a *counter or table* height about 10 in (255 mm) below elbow height for a standing person. This principle of *high/low table or counter heights* also applies for seated persons; however, the limiting condition for seated manual work is clearance under the *table or counter.*

Table A1 shows convenient *counter heights* for seated persons. The great variety of heights for comfort and optimal performance indicates a need for alternatives or a compromise in height if people who stand and people who sit will be using the same counter area.

Table A1
Convenient Heights of Tables and Counters for Seated People[1]

Conditions of Use	Short Women in mm		Tall Men in mm	
Seated in a wheelchair:				
Manual work–				
Desk or removeable armrests	26	660	30	760
Fixed, full-size armrests[2]	32[3]	815	32[3]	815
Light detailed work:				
Desk or removable armrests	29	735	34	865
Fixed, full-size armrests[2]	32[3]	815	34	865
Seated in a 16-in. (405-mm) High chair:				
Manual work	26	660	27	685
Light detailed work	28	710	31	785

[1] All dimensions are based on a work-surface thickness of 1 1/2 in (38 mm) and a clearance of 1 1/2 in (38 mm) between legs and the underside of a work surface.

[2] This type of wheelchair arm does not interfere with the positioning of a wheelchair under a work surface.

[3] This dimension is limited by the height of the armrests: a lower height would be preferable. Some people in this group prefer lower work surfaces, which require positioning the wheelchair back from the edge of the counter.

A4.33 Assembly Areas.

A4.33.2 Size of Wheelchair Locations. Spaces large enough for two wheelchairs allow people who are coming to a performance together to sit together.

A4.33.3 Placement of Wheelchair Locations. The location of wheelchair areas can be planned so that a variety of positions

Table A2. Summary of Assistive Listening Devices

within the seating area are provided. This will allow choice in viewing and price categories.

Building/life safety codes set minimum distances between rows of fixed seats with consideration of the number of seats in a row, the exit aisle width and arrangement, and the location of exit doors. "Continental" seating, with a greater number of seats per row and a commensurate increase in row spacing and exit doors, facilitates emergency egress for all people and increases ease of access to mid-row seats especially for people who walk with difficulty. Consideration of this positive attribute of "continental" seating should be included along with all other factors in the design of fixed seating areas.

Table A2. Summary of Assistive Listening Devices

System	Advantages	Disadvantages	Typical Applications
Induction Loop Transmitter: Transducer wired to induction loop around listening area. Receiver: Self-contained induction receiver or personal hearing aid with telecoil.	Cost-Effective Low Maintenance Easy to use Unobtrusive May be possible to integrate into existing public address system. Some hearing aids can function as receivers.	Signal spills over to adjacent rooms. Susceptible to electrical interference. Limited portability Inconsistent signal strength. Head position affects signal strength. Lack of standards for induction coil performance.	Meeting areas Theaters Churches and Temples Conference rooms Classrooms TV viewing
FM Transmitter: Flashlight-sized worn by speaker. Receiver: With personal hearing aid via DAI or induction neck-loop and telecoil; or self-contained with earphone(s).	Highly portable Different channels allow use by different groups within the same room. High user mobility Variable for large range of hearing losses.	High cost of receivers Equipment fragile Equipment obtrusive High maintenance Expensive to maintain Custom fitting to individual user may be required.	Classrooms Tour groups Meeting areas Outdoor events One-on-one
Infrared Transmitter: Emitter in line-of-sight with receiver. Receiver: Self-contained. Or with personal hearing aid via DAI or induction neckloop and telecoil.	Easy to use Insures privacy or confidentiality Moderate cost Can often be integrated into existing public address system.	Line-of-sight required between emitter and receiver. Ineffective outdoors Limited portability Requires installation	Theaters Churches and Temples Auditoriums Meetings requiring confidentiality TV viewing

Source: Rehab Brief, National Institute on Disability and Rehabilitation Research, Washington, DC, Vol. XII, No. 10, (1990).

A16

A4.33.6 Placement of Listening Systems. A distance of 50 ft (15 m) allows a person to distinguish performers' facial expressions.

A4.33.7 Types of Listening Systems. *An assistive listening system appropriate for an assembly area for a group of persons or where the specific individuals are not known in advance, such as a playhouse, lecture hall or movie theater, may be different from the system appropriate for a particular individual provided as an auxiliary aid or as part of a reasonable accommodation. The appropriate device for an individual is the type that individual can use, whereas the appropriate system for an assembly area will necessarily be geared toward the "average" or aggregate needs of various individuals.* A listening system that can be used from any seat in a seating area is the most flexible way to meet this specification. Earphone jacks with variable volume controls can benefit only people who have slight hearing loss and do not help people who use hearing aids. At the present time, *magnetic induction* loops are the most feasible type of listening system for people who use hearing aids *equipped with "T-coils,"* but people without hearing aids or those with hearing aids not equipped with inductive pick-ups cannot use them *without special receivers.* Radio frequency systems can be extremely effective and inexpensive. People without hearing aids can use them, but people with hearing aids need a special receiver to use them as they are presently designed. If hearing aids had a jack to allow a by-pass of microphones, then radio frequency systems would be suitable for people with and without hearing aids. Some listening systems may be subject to interference from other equipment and feedback from hearing aids of people who are using the systems. Such interference can be controlled by careful engineering design that anticipates feedback sources in the surrounding area.

Table A2, reprinted from a National Institute of Disability and Rehabilitation Research "Rehab Brief," shows some of the advantages and disadvantages of different types of assistive listening systems. In addition, the Architectural and Transportation Barriers Compliance Board (Access Board) has published a pamphlet on Assistive Listening Systems which lists demonstration centers across the country where technical assistance can be obtained in selecting and installing appropriate systems. The state of New York has also adopted a detailed technical specification which may be useful.

A5.0 Restaurants and Cafeterias.

A5.1 General. *Dining counters (where there is no service) are typically found in small carry-out restaurants, bakeries, or coffee shops and may only be a narrow eating surface attached to a wall. This section requires that where such a dining counter is provided, a portion of the counter shall be at the required accessible height.*

A7.0 Business and Mercantile.

A7.2(3) Assistive Listening Devices. *At all sales and service counters, teller windows, box offices, and information kiosks where a physical barrier separates service personnel and customers, it is recommended that at least one permanently installed assistive listening device complying with 4.33 be provided at each location or series. Where assistive listening devices are installed, signage should be provided identifying those stations which are so equipped.*

A7.3 Check-out Aisles. *Section 7.2 refers to counters without aisles; section 7.3 concerns check-out aisles. A counter without an aisle (7.2) can be approached from more than one direction such as in a convenience store. In order to use a check-out aisle (7.3), customers must enter a defined area (an aisle) at a particular point, pay for goods, and exit at a particular point.*

A10.3 Fixed Facilities and Stations.

A10.3.1(7) Route Signs. *One means of making control buttons on fare vending machines usable by persons with vision impairments is to raise them above the surrounding surface. Those activated by a mechanical motion are likely to be more detectable. If farecard vending, collection, and adjustment devices are designed to accommodate farecards having one tactually distinctive corner, then a person who has a vision impairment will insert the card with greater ease. Token collection devices that are designed to accommodate tokens which are perforated can allow a person to distinguish more readily between tokens and common coins. Thoughtful placement of accessible gates and fare vending machines in relation to inaccessible devices will make their use and detection easier for all persons with disabilities.*

BILLING CODE 4910-62-C

APPENDIX B TO PART 37—FTA REGIONAL OFFICES

Region I, Federal Transit Administration, 206 Federal Plaza, Suite 2940, New York, NY 10278
Region II, Federal Transit Administration, Transportation Systems Center, Kendall Square, 55 Broadway, Suite 921, Cambridge, MA 02142
Region III, Federal Transit Administration, 841 Chestnut Street, Suite 714, Philadelphia, PA 19107
Region IV, Federal Transit Administration, 1720 Peachtree Road NW., Suite 400, Atlanta, GA 30309
Region V, Federal Transit Administration, 55 East Monroe Street, Room 1415, Chicago, IL 60603
Region VI, Federal Transit Administration, 819 Taylor Street, Suite 9A32, Ft. Worth, TX 76102
Region VII, Federal Transit Administration, 6301 Rockville Road, Suite 303, Kansas City, MS 64131
Region VIII, Federal Transit Administration, Federal Office Building, 1961 Stout Street, 5th Floor, Denver, CO 80294
Region IX, Federal Transit Administration, 211 Main Street, Room 1160, San Francisco, CA 94105
Region X, Federal Transit Administration, 3142 Federal Building, 915 Second Avenue, Seattle, WA 98174

APPENDIX C TO PART 37—CERTIFICATIONS

Certification of Equivalent Service

The (name of agency) certifies that its demand responsive service offered to individuals with disabilities, including individuals who use wheelchairs, is equivalent to the level and quality of service offered to individuals without disabilities. Such service, when viewed in its entirety, is provided in the most integrated setting feasible and is equivalent with respect to:

(1) Response time;
(2) Fares;
(3) Geographic service area;
(4) Hours and days of service;
(5) Restrictions on trip purpose;
(6) Availability of information and reservation capability; and
(7) Constraints on capacity or service availability.

In accordance with 49 CFR 37.77, public entities operating demand responsive systems for the general public which receive financial assistance under section 18 of the Federal Transit Act must file this certification with the appropriate state program office before procuring any inaccessible vehicle. Such public entities not receiving FTA funds shall also file the certification with the appropriate state program office. Such public entities receiving FTA funds under any other section of the FT Act must file the certification with the appropriate FTA regional office. This certification is valid for no longer than one year from its date of filing.

(name of authorized official)

(title)

(signature)

MPO Certification of Paratransit Plan

The (name of Metropolitan Planning Organization) hereby certifies that it has reviewed the ADA paratransit plan prepared by (name of submitting entity (ies)) as required under 49 CFR part 37. 139(h) and finds it to be in conformance with the transportation plan developed under 49 CFR part 613 and 23 CFR part 450 (the FTA/FHWA joint planning regulation). This certification is valid for one year.

signature

name of authorized official

title

date

Existing Paratransit Service Survey

This is to certify that (name of public entity (ies)) has conducted a survey of existing paratransit services as required by 49 CFR 37.137 (a).

signature

name of authorized official

title

date

Included Service Certification

This is to certify that service provided by other entities but included in the ADA paratransit plan submitted by (name of submitting entity (ies)) meets the requirements of 49 CFR part 37, subpart F providing that ADA eligible individuals have access to the service; the service is provided in the manner represented; and, that efforts will be made to coordinate the provision of paratransit service offered by other providers.

signature

name of authorized official

title

date

Joint Plan Certification I

This is to certify that (name of entity covered by joint plan) is committed to providing ADA paratransit service as part of this coordinated plan and in conformance with the requirements of 49 CFR part 37, subpart F.

signature

name of authorized official

title

date

Joint Plan Certification II

This is to certify that (name of entity covered by joint plan) will, in accordance with 49 CFR 37.141, maintain current levels of paratransit service until the coordinated plan goes into effect.

signature

name of authorized official

title

date

State Certification that Plans have been Received

This is to certify that all ADA paratransit plans required under 49 CFR 37.139 have been received by (state DOT)

signature

name of authorized official

title

date

APPENDIX D TO PART 37—CONSTRUCTION AND INTERPRETATION OF PROVISIONS OF 49 CFR PART 37

This appendix explains the Department's construction and interpretation of provisions of 49 CFR part 37. It is intended to be used as definitive guidance concerning the meaning and implementation of these provisions. The appendix is organized on a section-by-section basis. Some sections of the rule are not discussed in the appendix, because they are self-explanatory or we do not currently have interpretive material to provide concerning them.

The Department also provides guidance by other means, such as manuals and letters. The Department intends to update this Appendix periodically to include guidance, provided in response to inquiries about specific situations, that is of general relevance or interest.

AMENDMENTS TO 49 CFR PART 27

Section 27.67(d) has been revised to reference the Access Board facility guidelines (found in appendix A to part 37) as well as the Uniform Federal Accessibility Standard (UFAS). This change was made to ensure consistency between requirements under section 504 and the ADA. Several caveats relating to the application of UFAS (e.g., that spaces not used by the public or likely to result in the employment of individuals with disabilities would not have to meet the standards) have been deleted. It is the Department's understanding that provisions of the Access Board standards and part 37 make them unnecessary.

The Department is aware that there is a transition period between the publication of this rule and the effective date of many of its provisions (e.g., concerning facilities and paratransit services) during which section 504 remains the basic authority for accessibility modifications. In this interval, the Department expects recipients' compliance with section 504 to look forward to compliance with the ADA provisions. That is, if a recipient is making a decision about the shape of its paratransit service between the publication of this rule and January 26, 1992, the decision should be in the direction of service that will help to comply with post-January 1992 requirements. A recipient that severely curtailed its present paratransit service in October, and then asked for a three- or five-year phase-in of service under its paratransit plan, would not be acting consistent with this policy.

Likewise, the Department would view with disfavor any attempt by a recipient to accelerate the beginning of the construction, installation or alteration of a facility to before January 26, 1992, to ''beat the clock'' and avoid the application of this rule's facility standards. The Department would be very reluctant to approve grants, contracts, exemption requests etc., that appear to have this effect. The purpose of the Department's administration of section 504 is to ensure compliance with the national policy stated in the ADA, not to permit avoidance of it.

SUBPART A—GENERAL

Section 37.3 Definitions

The definition of ''commuter authority'' includes a list of commuter rail operators drawn from a statutory reference in the

ADA. It should be noted that this list is not exhaustive. Other commuter rail operators (e.g., in Chicago or San Francisco) would also be encompassed by this definition.

The definition of ''commuter bus service'' is important because the ADA does not require complementary paratransit to be provided with respect to commuter bus service operated by public entities. The rationale that may be inferred for the statutory exemption for this kind of service concerns its typical characteristics (e.g., no attempt to comprehensively cover a service area, limited route structure, limited origins and destinations, interface with another mode of transportation, limited purposes of travel). These characteristics can be found in some transportation systems other than bus systems oriented toward work trips. For example, bus service that is used as a dedicated connecter to commuter or intercity rail service, certain airport shuttles, and university bus systems share many or all of these characteristics. As explained further in the discussion of subpart B, the Department has determined that it is appropriate to cover these services with the requirements applicable to commuter bus systems.

The definitions of ''designated public transportation'' and ''specified public transportation'' exclude transportation by aircraft. Persons interested in matters concerning access to air travel for individuals with disabilities should refer to 14 CFR part 382, the Department's regulation implementing the Air Carrier Access Act. Since the facility requirements of this part refer to facilities involved in the provision of designated or specified public transportation, airport facilities are not covered by this part. DOJ makes clear that public and private airport facilities are covered under its title II and title III regulations, respectively.

The examples given in the definition of ''facility'' all relate to ground transportation. We would point out that, since transportation by passenger vessels is covered by this rule and by DOJ rules, such vessel-related facilities as docks, wharfs, vessel terminals, etc. fall under this definition. It is intended that specific requirements for vessels and related facilities will be set forth in future rulemaking.

The definitions of ''fixed route system'' and ''demand responsive system'' derive directly from the ADA's definitions of these terms. Some systems, like a typical city bus system or a dial-a-ride van system, fit clearly into one category or the other. Other systems may not so clearly fall into one of the categories. Nevertheless, because how a system is categorized has consequences for the requirements it must meet, entities must determine, on a case-by-case basis, into which category their systems fall.

In making this determination, one of the key factors to be considered is whether the individual, in order to use the service, must request the service, typically by making a call.

With fixed route service, no action by the individual is needed to initiate public transportation. If an individual is at a bus stop at the time the bus is scheduled to appear, then that individual will be able to access the transportation system. With demand-reponsive service, an additional step must be taken by the individual before he or she can ride the bus, i.e., the individual must make a telephone call.

(S. Rept. 101–116 at 54).

Other factors, such as the presence or absence of published schedules, or the variation of vehicle intervals in anticipation of differences in usage, are less important in making the distinction between the two types of service. If a service is provided along a given route, and a vehicle will arrive at certain times regardless of whether a passenger actively requests the vehicle, the service in most cases should be regarded as fixed route rather than demand responsive.

At the same time, the fact that there is an interaction between a passenger and transportation service does not necessarily make the service demand responsive. For many types of service (e.g., intercity bus, intercity rail) which are clearly fixed route, a passenger has to interact with an agent to buy a ticket. Some services (e.g., certain commuter bus or commuter rail operations) may use flag stops, in which a vehicle along the route does not stop unless a passenger flags the vehicle down. A traveler staying at a hotel usually makes a room reservation before hopping on the hotel shuttle. This kind of interaction does not make an otherwise fixed route service demand responsive.

On the other hand, we would regard a system that permits user-initiated deviations from routes or schedules as demand-responsive. For example, if a rural public transit system (e.g., a section 18 recipient) has a few fixed routes, the fixed route portion of its system would be subject to the requirements of subpart F for complementary paratransit service. If the entity changed its system so that it operated as a route-deviation system, we would regard it as a demand responsive system. Such a system would not be subject to complementary paratransit requirements.

The definition of ''individual with a disability'' excludes someone who is currently engaging in the illegal use of drugs, when a covered entity is acting on the basis of such use. This concept is more important in employment and public accommodations contexts than it is in transportation, and is discussed at greater length in the DOJ and EEOC rules. Essentially, the definition says that, although drug addiction (i.e., the status or a diagnosis of being a drug abuser) is a disability, no one is regarded as being an

individual with a disability on the basis of current illegal drug use.

Moreover, even if an individual has a disability, a covered entity can take action against the individual if that individual is currently engaging in illegal drug use. For example, if a person with a mobility or vision impairment is ADA paratransit eligible, but is caught possessing or using cocaine or marijuana on a paratransit vehicle, the transit provider can deny the individual further eligibility. If the individual has successfully undergone rehabilitation or is no longer using drugs, as explained in the preamble to the DOJ rules, the transit provider could not continue to deny eligibility on the basis that the individual was a former drug user or still was diagnosed as a person with a substance abuse problem.

We defined ''paratransit'' in order to note its specialized usage in the rule. Part 37 uses this term to refer to the complementary paratransit service comparable to public fixed route systems which must be provided. Typically, paratransit is provided in a demand responsive mode. Obviously, the rule refers to a wide variety of demand responsive services that are not ''paratransit,'' in this specialized sense.

The ADA's definition of ''over-the-road bus'' may also be somewhat narrower than the common understanding of the term. The ADA definition focuses on a bus with an elevated passenger deck over a baggage compartment (i.e., a ''Greyhound-type'' bus). Other types of buses commonly referred to as ''over-the-road buses,'' which are sometimes used for commuter bus or other service, do not come within this definition. Only buses that do come within the definition are subject to the over-the-road bus exception to accessibility requirements in Title III of the ADA.

For terminological clarity, we want to point out that two different words are used in ADA regulations to refer to devices on which individuals with hearing impairments communicate over telephone lines. DOJ uses the more traditional term ''telecommunications device for the deaf'' (TDD). The Access Board uses a newer term, ''text telephone.'' The DOT rule uses the terms interchangably.

The definition of ''transit facility'' applies only with reference to the TDD requirement of appendix A to this Part. The point of the definition is to exempt from TDD requirements open structures, like bus shelters, or facilities which are not used primarily as transportation stops or terminals. For example, a drug store in a small town may sell intercity bus tickets, and people waiting for the bus may even wait for the bus inside the store. But the drug store's raison d'etre is not to be a bus station. Its transportation function is only incidental. Consequently, its obligations with respect to TDDs would be those required of a place of public accommodation by DOJ rules.

A ''used vehicle'' means a vehicle which has prior use; prior, that is, to its acquisition by its present owner or lessee. The definition is not relevant to existing vehicles in one's own fleet, which were obtained before the ADA vehicle accessibility requirements took effect.

A ''vanpool'' is a voluntary commuter ride-sharing arrangement using a van with a seating capacity of more than seven persons, including the driver. Carpools are not included in the definition. There are some systems using larger vehicles (e.g., buses) that operate, in effect, as vanpools. This definition encompasses such systems. Vanpools are used for daily work trips, between commuters' homes (or collection points near them) and work sites (or drop points near them). Drivers are themselves commuters who are either volunteers who receive no compensation for their efforts or persons who are reimbursed by other riders for the vehicle, operating, and driving costs.

The definition of ''wheelchair'' includes a wide variety of mobility devices. This inclusiveness is consistent with the legislative history of the ADA (See S. Rept. 101–116 at 48). While some mobility devices may not look like many persons' traditional idea of a wheel chair, three and four wheeled devices, of many varied designs, are used by individuals with disabilities and must be transported. The definition of ''common wheelchair,'' developed by the Access Board, is intended to help transit providers determine which wheelchairs they have to carry. The definition involves an ''envelope'' relating to the Access Board requirements for vehicle lifts.

A lift conforming to Access Board requirements is 30″ x 48″ and capable of lifting a wheelchair/occupant combination of up to 600 pounds. Consequently, a common wheelchair is one that fits these size and weight dimensions. Devices used by individuals with disabilities that do not fit this envelope (e.g., may ''gurneys'') do not have to be carried.

Section 37.5 Nondiscrimination

This section states the general nondiscrimination obligation for entities providing transportation service. It should be noted that virtually all public and private entities covered by this regulation are also covered by DOJ regulations, which have more detailed statements of general nondiscrimination obligations.

Under the ADA, an entity may not consign an individual with disabilities to a separate, ''segregated,'' service for such persons, if the individual can in fact use the service for the general public. This is true even if the individual takes longer, or has more difficulty, than other persons in using the service for the general public.

One instance in which this principal applies concerns the use of designated priority seats (e.g., the so-called ''elderly and handicapped'' seats near the entrances to buses). A person with a disability (e.g., a visual impairment) may choose to take advantage of this accommodation or not. If not, it is contrary to rule for the entity to insist that the individual must sit in the priority seats.

The prohibition on special charges applies to charges for service to individuals with disabilities that are higher than charges for the same or comparable services to other persons. For example, if a shuttle service charges $20.00 for a ride from a given location to the airport for most people, it could not charge $40.00 because the passenger had a disability or needed to use the shuttle service's lift-equipped van. Higher mileage charges for using an accessible vehicle would likewise be inconsistent with the rule. So would charging extra to carry a service animal accompanying an individual with a disability.

If a taxi company charges $1.00 to stow luggage in the trunk, it cannot charge $2.00 to stow a folding wheelchair there. This provision does not mean, however, that a transportation provider cannot charge nondiscriminatory fees to passengers with disabilities. The taxi company in the above example can charge a passenger $1.00 to stow a wheelchair in the trunk; it is not required to waive the charge. This section does not prohibit the fares for paratransit service which transit providers are allowed to charge under §37.131(d).

A requirement for an attendant is inconsistent with the general nondiscrimination principle that prohibits policies that unnecessarily impose requirements on individuals with disabilities that are not imposed on others. Consequently, such requirements are prohibited. An entity is not required to provide attendant services (e.g., assistance in toileting, feeding, dressing), etc.

This provision must also be considered in light of the fact that an entity may refuse service to someone who engages in violent, seriously disruptive, or illegal conduct. If an entity may legitimately refuse service to someone, it may condition service to him on actions that would mitigate the problem. The entity could require an attendant as a condition of providing service it otherwise had the right to refuse.

The rule also points out that involuntary conduct related to a disability that may offend or annoy other persons, but which does not pose a direct treat, is not a basis for refusal of transportation. For example, some persons with Tourette's syndrome may make involuntary profane exclamations. These may be very annoying or offensive to others, but would not be a ground for denial of service. Nor would it be consistent with the nondiscrimination requirements of this part to deny service based on fear or misinformation about the disability. For example, a transit provider could not deny service to a person with HIV disease because its personnel or other passengers are afraid of being near people with that condition.

This section also prohibits denials of service or the placing on services of conditions inconsistent with this part on individuals with disabilities because of insurance company policies or requirements. If an insurance company told a transit provider that it would withdraw coverage, or raise rates, unless a transit provider refused to carry persons with disabilities, or unless the provider refused to carry three-wheeled scooters, this would not excuse the provider from providing the service as mandate by this part. This is not a regulatory requirement on insurance companies, but simply says that covered entities must comply with this part, even in the face of difficulties with their insurance companies.

Section 37.7 Standards for Accessible Vehicles

This section makes clear that, in order to meet accessibility requirements of this rule, vehicles must comply with Access Board standards, incorporated in DOT rules as 49 CFR part 38. Paragraph (b) of §37.7 spells out a procedure by which an entity (public or private) can deviate from provisions of part 38 with respect to vehicles. The entity can make a case to the Administrator that it is unable to comply with a particular portion of part 38, as written, for specified reasons, and that it is providing comparable compliance by some alternative method. The entity would have to describe how its alternative mode of compliance would meet or exceed the level of access to or usability of the vehicle that compliance with part 38 would otherwise provide.

It should be noted that equivalent facilitation does not provide a means to get a waiver of accessibility requirements. Rather, it is a way in which comparable (not a lesser degree of) accessibility can be provided by other means. The entity must consult with the public through some means of public participation in devising its alternative form of compliance, and the public input must be reflected in the submission to the Administrator (or the Federal Railroad Administrator in appropriate cases, such as a request concerning Amtrak). The Administrator will make a case-by-case decision about whether compliance with part 38 was achievable and, if not, whether the proffered alternative complies with the equivalent facilitation standard. DOT intends to consult with the Access Board in making these determinations.

This equivalent facilitation provision can apply to buses or other motor vehicles as well as to rail cars and vehicles. An example of what could be an equivalent facilitation

would concern rail cars which would leave too wide a horizontal gap between the door and the platform. If the operator used a combination of bridgeplates and personnel to bridge the gap, it might be regarded as an equivalent facilitation in appropriate circumstances.

Section 37.7(c) clarifies which specifications must be complied with for over-the-road buses purchased by public entities (under subpart D of part 37) or private entities standing in the shoes of the public entity (as described in §37.23 of part 37). This section is necessary to make clear that over-the-road coaches must be accessible, when they are purchased by or in furtherance of a contract with a public entity. While the October 4, 1990 rule specified that over-the-road coaches must be accessible under these circumstances, we had not previously specified what constitutes accessibility.

Accordingly, this paragraph specifies that an over-the-road bus must have a lift which meets the performance requirements of a regular bus lift (see §38.23) and must meet the interim accessibility features specified for all over-the-road buses in part 3, subpart G.

Section 37.9 Standards for Transportation Facilities

This section makes clear that, in order to meet accessibility requirements of this rule, vehicles must comply with appendix A to part 37, which incorporates the Access Board facility guidelines.

Paragraph (b) of §37.9 provides that, under certain circumstances, existing accessibility modifications to key station facilities do not need to be modified further in order to conform to appendix A. This is true even if the standards under which the facility was modified differ from the Access Board guidelines or provide a lesser standard of accessibility.

To qualify for this ''grandfathering,'' alterations must have been before January 26, 1992. As in other facility sections of the rule, an alteration is deemed to begin with the issuance of a notice to proceed or work order. The existing modifications must conform to ANSI A–117.1, Specifications for Making Buildings and Facilities Accessible to and Usable by the Physically Handicapped 1980, or the Uniform Federal Accessibility Standard. (UFAS).

For example, if an entity used a Federal grant or loan or money to make changes to a building, it would already have had to comply with the Uniform Federal Accessibility Standards. Likewise, if a private entity, acting without any Federal money in the project, may have complied with the ANSI A117.1 standard. So long as the work was done in conformity with the standard that was in effect when the work was done, the alteration will be considered accessible.

However, because one modification was made to a facility under one of these standards, the entity still has a responsibility to make other modifications needed to comply with applicable accessibility requirements. For example, if an entity has made some modifications to a key station according to one of these older standards, but the modifications do not make the key station entirely accessible as this rule requires, then additional modifications would have to be made according to the standards of appendix A. Suppose this entity has put an elevator into the station to make it accessible to individuals who use wheelchairs. If the elevator does not fully meet appendix A standards, but met the applicable ANSI standard when it was installed, it would not need further modifications now. But if it had not already done so, the entity would have to install a tactile strip along the platform edge in order to make the key station fully accessible as provided in this rule. The tactile strip would have to meet appendix A requirements.

The rule specifically provides that ''grandfathering'' applies only to alterations of individual elements and spaces and only to the extent that provisions covering those elements or spaces are found in UFAS or AHSI A117.1. For example, alterations to the telephones in a key station may have been carried out in order to lower them to meet the requirements of UFAS, but telecommunications devices for the deaf (TDDs) were not installed. (Neither UFAS nor the ANSI standard include requirements concerning TDDs). However, because appendix A does contain TDD requirements, the key station must now be altered in accordance with the standards for TDDs. Similarly, earlier alteration of an entire station in accordance with UFAS or the ANSI standard would not relieve an entity from compliance with any applicable provision concerning the gap between the platform between the platform and the vehicle in a key station, because neither of these two standards addresses the interface between vehicle and platform.

New paragraph (c) of this section clarifies a provision of the Access Board's standards concerning the construction of bus stop pads at bus stops. The final Access Board standard (found at section 10.2.1(1) of appendix A to part 37) has been rewritten slightly to clear up confusion about the perceived necessary construction of a bus stop pad. Section 10.2.1(1) does not require that anyone build a bus stop pad; it does specify what a bus stop pad must look like, if it is constructed. The further clarifying language in §37.9(c) explains that public entities must exert control over the construction of bus stop pads if they have the ability to do so. The Access Board, as well as DOT, recognize that most physical improvements related to bus stops are out of the control of the transit

provider. Paragraph (c) of §37.9 merely notes that where a transit provider does have control over the construction, it must exercise that control to ensure that the pad meets these specifications.

One further clarification concerning the implication of this provision deals with a bus loading island at which buses pull up on both sides of the island. It would be possible to read the bus pad specification to require the island to be a minimum of 84 inches wide (two widths of a bus stop pad), so that a lift could be deployed from buses on both sides of the island at the same time. A double-wide bus pad, however, is likely to exceed available space in most instances.

Where there is space, of course, building a double-wide pad is one acceptable option under this rule. However, the combination of a pad of normal width and standard operational practices may also suffice. (Such practices could be offered as an equivalent facilitation.) For example, buses on either side of the island could stop at staggered locations (i.e., the bus on the left side could stop several feet ahead of the bus on the right side), so that even when buses were on both sides of the island at once, their lifts could be deployed without conflict. Where it is possible, building the pad a little longer than normal size could facilitate such an approach. In a situation where staggered stop areas are not feasible, an operational practice of having one bus wait until the other's lift cycle had been completed could do the job. Finally, the specification does not require that a pad be built at all. If there is nothing that can be done to permit lift deployment on both sides of an island, the buses can stop on the street, or some other location, so long as the lift is deployable.

Like §37.7, this section contains a provision allowing an entity to request approval for providing accessibility through an equivalent facilitation.

Section 37.11 Administrative Enforcement

This section spells out administrative means of enforcing the requirements of the ADA. Recipients of Federal financial assistance from DOT (whether public or private entities) are subject to DOT's section 504 enforcement procedures. The existing procedures, including administrative complaints to the DOT Office of Civil Rights, investigation, attempts at conciliation, and final resort to proceedings to cut off funds to a noncomplying recipient, will continue to be used.

In considering enforcement matters, the Department is guided by a policy that emphasizes compliance. The aim of enforcement action, as we see it, is to make sure that entities meet their obligations, not to impose sanctions for their own sake. The Department's enforcement priority is on failures to comply with basic requirements and ''pattern or practice'' kinds of problems, rather than on isolated operational errors.

Under the DOJ rules implementing title II of the ADA (28 CFR part 35), DOT is a ''designated agency'' for enforcement of complaints relating to transportation programs of public entities, even if they do not receive Federal financial assistance. When it receives such a complaint, the Department will investigate the complaint, attempt conciliation and, if conciliation is not possible, take action under section 504 and/or refer the matter to the DOJ for possible further action.

Title III of the ADA does not give DOT any administrative enforcement authority with respect to private entities whose transportation services are subject to part 37. In its title III rule (28 CFR part 36), DOJ assumes enforcement responsibility for all title III matters. If the Department of Transportation receives complaints of violations of part 37 by private entities, it will refer the matters to the DOJ.

It should be pointed out that the ADA includes other enforcement options. Individuals have a private right of action against entities who violate the ADA and its implementing regulations. The DOJ can take violators to court. These approaches are not mutually exclusive with the administrative enforcement mechanisms described in this section. An aggrieved individual can complain to DOT about an alleged transportation violation and go to court at the same time. Use of administrative enforcement procedures is not, under titles II and III, an administrative remedy that individuals must exhaust before taking legal action.

We also would point out that the ADA does not assert any blanket preemptive authority over state or local nondiscrimination laws and enforcement mechanisms. While requirements of the ADA and this regulation would preempt conflicting state or local provisions (e.g., a building code or zoning ordinance that prevents compliance with appendix A or other facility accessibility requirements, a provision of local law that said bus drivers could not leave their seats to help secure wheelchair users), the ADA and this rule do not prohibit states and localities from legislating in areas relating to disability. For example, if a state law requires a higher degree of service than the ADA, that requirement could still be enforced. Also, states and localities may continue to enforce their own parallel requirements. For example, it would be a violation of this rule for a taxi driver to refuse to pick up a person based on that person's disability. Such a refusal may also be a violation of a county's taxi rules, subjecting the violator to a fine or suspension of operating privileges. Both ADA and local remedies could proceed in such a case.

Labor-management agreements cannot stand in conflict with the requirements of

the ADA and this rule. For example, if a labor-management agreement provides that vehicle drivers are not required to provide assistance to persons with disabilities in a situation in which this rule requires such assistance, then the assistance must be provided notwithstanding the agreement. Labor and management do not have the authority to agree to violate requirements of Federal law.

Section 37.13 Effective Date for Certain Vehicle Lift Specifications.

This section contains an explicit statement of the effective date for vehicle lift platform specifications. The Department has decided to apply the new part 38 lift platform specifications to solicitations after January 25, 1992. As in the October 4, 1990, rule implementing the acquisition requirements; the date of a solicitation is deemed to be the closing date for the submission of bids or offers in a procurement.

SUBPART B—APPLICABILITY

Section 37.21 Applicability.—General

This section emphasizes the broad applicability of part 37. Unlike section 504, the ADA and its implementing rules apply to entities whether or not they receive Federal financial assistance. They apply to private and public entities alike. For entities which do receive Federal funds, compliance with the ADA and part 37 is a condition of compliance with section 504 and 49 CFR part 27, DOT's section 504 rule.

Virtually all entities covered by this rule also are covered by DOJ rules, either under 28 CFR part 36 as state and local program providers or under 28 CFR part 35 as operators of places of public accommodation. Both sets of rules apply; one does not override the other. The DOT rules apply only to the entity's transportation facilities, vehicles, or services; the DOJ rules may cover the entity's activities more broadly. For example, if a public entity operates a transit system and a zoo, DOT's coverage would stop at the transit system's edge, while DOJ's rule would cover the zoo as well.

DOT and DOJ have coordinated their rules, and the rules have been drafted to be consistent with one another. Should, in the context of some future situation, there be an apparent inconsistency between the two rules, the DOT rule would control within the sphere of transportation services, facilities and vehicles.

Section 37.23 Service Under Contract

This section requires private entities to ''stand in the shoes'' of public entities with whom they contract to provide transportation services. It ensures that, while a public entity may contract out its service, it may not contract away its ADA responsibilities. The requirement applies primarily to vehicle acquisition requirements and to service provision requirements.

If a public entity wishes to acquire vehicles for use on a commuter route, for example, it must acquire accessible vehicles. It may acquire accessible over-the-road buses, it may acquire accessible full-size transit buses, it may acquire accessible smaller buses, or it may acquire accessible vans. It does not matter what kind of vehicles it acquires, so long as they are accessible. On the other hand, if the public entity wants to use inaccessible buses in its existing fleet for the commuter service, it may do so. All replacement vehicles acquired in the future must, of course, be accessible.

Under this provision, a private entity which contracts to provide this commuter service stands in the shoes of the public entity and is subject to precisely the same requirements (it is not required to do more than the public entity). If the private entity acquires vehicles used to provide the service, the vehicles must be accessible. If it cannot, or chooses not to, acquire an accessible vehicle of one type, it can acquire an accessible vehicle of another type. Like the public entity, it can provide the service with inaccessible vehicles in its existing fleet.

The import of the provision is that it requires a private entity contracting to provide transportation service to a public entity to follow the rules applicable to the public entity. For the time being, a private entity operating in its own right can purchase a new over-the-road bus inaccessible to individuals who use wheelchairs. When that private entity operates service under contract to the public entity, however, it is just as obligated as the public entity itself to purchase an accessible bus for use in that service, whether or not it is an over-the-road bus.

The ''stand in the shoes'' requirement applies not only to vehicles acquired by private entities explicitly under terms of an executed contract to provide service to a public entity, but also to vehicles acquired ''in contemplation of use'' for service under such a contract. This language is included to ensure good faith compliance with accessibility requirements for vehicles acquired before the execution of a contract. Whether a particular acquisition is in contemplation of use on a contract will be determined on a case-by-case basis. However, acquiring a vehicle a short time before a contract is executed and then using it for the contracted service is an indication that the vehicle was acquired in contemplation of use on the contract, as is acquiring a vehicle obstensibly for other service provided by the entity and then regularly rotating it into service under the contract.

The ''stand in the shoes'' requirement is applicable only to the vehicles and service

(public entity service requirements, like §37.163, apply to a private entity in these situations) provided under contract to a public entity. Public entity requirements clearly do not apply to all phases of a private entity's operations, just because it has a contract with a public entity. For example, a private bus company, if purchasing buses for service under contract to a public entity, must purchase accessible buses. The same company, to the extent permitted by the private entity provisions of this part, may purchase inaccessible vehicles for its tour bus operations.

The Department also notes that the ''stands in the shoes'' requirement may differ depending on the kind of service involved. The public entity's ''shoes'' are shaped differently, for example, depending on whether the public entity is providing fixed route or demand responsive service to the general public. In the case of demand responsive service, a public entity is not required to buy an accessible vehicle if its demand responsive system, when viewed in its entirety, provides service to individuals with disabilities equivalent to its service to other persons. A private contractor providing a portion of this paratransit service would not necessarily have to acquire an accessible vehicle if this equivalency test is being met by the system as a whole. Similarly, a public entity can, after going through a ''good faith efforts'' search, acquire inaccessible buses. A private entity under contract to the public can do the same. ''Stand in the shoes'' may also mean that, under some circumstances, a private contractor need not acquire accessible vehicles. If a private company contracts with a public school district to provide school bus service, it is covered, for that purpose, by the exemption for public school transportation.

In addition, the requirement that a private entity play by the rules applicable to a public entity can apply in situations involving an ''arrangement or other relationship'' with a public entity other than the traditional contract for service. For example, a private utility company that operates what is, in essence, a regular fixed route public transportation system for a city, and which receives section 3 or 9 funds from FTA via an agreement with a state or local government agency, would fall under the provisions of this section. The provider would have to comply with the vehicle acquisition, paratransit, and service requirements that would apply to the public entity through which it receives the FTA funds, if that public entity operated the system itself. The Department would not, however, construe this section to apply to situations in which the degree of FTA funding and state and local agency involvement is considerably less, or in which the system of transportation involved is not a *de facto* surrogate for a traditional public entity fixed route transit system serving a city (e.g., a private non-profit social service agency which receives FTA section 16(b)(2) funds to purchase a vehicle).

This section also requires that a public entity not diminish the percentage of accessible vehicles in its fleet through contracting. For example, suppose a public entity has 100 buses in its fleet, of which 20 are accessible, meaning that 20 percent of its fleet is accessible. The entity decides to add a fixed route, for which a contractor is engaged. The contractor is supplying ten of its existing inaccessible buses for the fixed route. To maintain the 20 percent accessibility ratio, there would have to be 22 accessible buses out of the 110 buses now in operation in carrying out the public entity's service. The public entity could maintain its 20 percent level of accessibility through any one or more of a number of means, such as having the contractor to provide two accessible buses, retrofitting two if its own existing buses, or accelerating replacement of two of its own inaccessible buses with accessible buses.

This rule applies the ''stand in the shoes'' principle to transactions wholly among private entities as well. For example, suppose a taxi company (a private entity primarily engaged in the business of transporting people) contracts with a hotel to provide airport shuttle van service. With respect to that service, the taxi company would be subject to the requirements for private entities not primarily in the business of transporting people, since it would be ''standing in the shoes'' of the hotel for that purpose.

Section 37.25 University Transportation Systems

Private university-operated transportation systems are subject to the requirements of this rule for private entities not primarily engaged in the business of transporting people. With one important exception, public university-operated transportation systems are subject to the requirements of the rule for public entities. The nature of the systems involved—demand-responsive or fixed route—determines the precise requirements involved.

For public university fixed route systems, public entity requirements apply. In the case of fixed route systems, the requirements for commuter bus service would govern. This has the effect of requiring the acquisition of accessible vehicles and compliance with most other provisions of the rule, but does not require the provision of complementary paratransit or submitting a paratransit plan. As a result, private and public universities will have very similar obligations under the rule.

Section 37.27 Transportation for Elementary and Secondary Education Systems

This section restates the statutory exemption from public entity requirements given to public school transportation. This extension also applies to transportation of pre-school children to Head Start or special education programs which receive Federal assistance. It also applies to arrangements permitting pre-school children of school bus drivers to ride a school bus or allowing teenage mothers to be transported to day care facilities at a school or along a school bus route so that their mothers may continue to attend school (See H. Rept. 101–485, pt. 1 at 27). The situation for private schools is more complex. According to the provision, a private elementary or secondary school's transportation system is exempt from coverage under this rule if all three of the following conditions are met: (1) The school receives Federal financial assistance; (2) the school is subject to section 504; and (3) the school's transportation system provides transportation services to individuals with disabilities, including wheelchair users, equivalent to those provided to individuals without disabilities. The test of equivalency is the same as that for other private entities, and is described under §37.105. If the school does not meet all these criteria, then it is subject to the requirements of Part 37 for private entities not primarily engaged in the business of transporting people.

The Department notes that, given the constitutional law on church-state separation, it is likely that church-affiliated private schools do not receive Federal financial assistance. To the extent that these schools' transportation systems are operated by religious entities or entities controlled by religious organizations, they are not subject to the ADA at all, so this section does not apply to them.

Section 37.29 Private Providers of Taxi Service

This section first recites that providers of taxi service are private entities primarily engaged in the business of transporting people which provide demand responsive service. For purposes of this section, other transportation services that involve calling for a car and a driver to take one places (e.g., limousine services, of the kind that provide luxury cars and chauffeurs for senior proms and analogous adult events) are regarded as taxi services.

Under the ADA, no private entity is required to purchase an accessible automobile. If a taxi company purchases a larger vehicle, like a van, it is subject to the same rules as any other private entity primarily engaged in the business of transporting people which operates a demand responsive service. That is, unless it is already providing equivalent service, any van it acquires must be accessible. Equivalent service is measured according to the criteria of §37.105. Taxi companies are not required to acquire vehicles other than automobiles to add accessible vehicles to their fleets.

Taxi companies are subject to nondiscrimination obligations. These obligations mean, first, that a taxi service may not deny a ride to an individual with a disability who is capable of using the taxi vehicles. It would be discrimination to pass up a passenger because he or she was blind or used a wheelchair, if the wheelchair was one that could be stowed in the cab and the passenger could transfer to a vehicle seat. Nor could a taxi company insist that a wheelchair user wait for a lift-equipped van if the person could use an automobile.

It would be discrimination for a driver to refuse to assist with stowing a wheelchair in the trunk (since taxi drivers routinely assist passengers with stowing luggage). It would be discrimination to charge a higher fee or fare for carrying a person with a disability than for carrying a non-disabled passenger, or a higher fee for stowing a wheelchair than for stowing a suitcase. (Charging the same fee for stowing a wheelchair as for stowing a suitcase would be proper, however.) The fact that it may take somewhat more time and effort to serve a person with a disability than another passenger does not justify discriminatory conduct with respect to passengers with disabilities.

State or local governments may run user-side subsidy arrangements for the general public (e.g., taxi voucher systems for senior citizens or low-income persons). Under the DOJ title II rule, these programs would have to meet ''program accessibility'' requirements, which probably would require that accessible transportation be made available to senior citizens or low-income persons with disabilities. This would not directly require private taxi providers who accept the vouchers to purchase accessible vehicles beyond the requirements of this rule, however.

Section 37.31 Vanpools

This provision applies to public vanpool systems the requirements for public entities operating demand responsive systems for the general public. A public vanpool system is one operated by a public entity, or in which a public entity owns or purchases or leases the vehicles. Lesser degrees of public involvement with an otherwise private ride-sharing arrangement (e.g., provision of parking spaces, HOV lanes, coordination or clearinghouse services) do not convert a private into a public system.

The requirement for a public vanpool system is that it purchase or lease an accessible vehicle unless it can demonstrate that it provides equivalent service to individuals with disabilities, including individuals who use wheelchairs, as it provides to individuals

without disabilities. For a public vanpool system, the equivalency requirement would be met if an accessible vehicle is made available to and used by a vanpool when an individual with a disability needs such a vehicle to participate. Public vanpool systems may meet this requirement through obtaining a percentage of accessible vehicles that is reasonable in light of demand for them by participants, but this is not required, so long as the entity can respond promptly to requests for participation in a vanpool with the provision of an accessible van when needed.

There is no requirement for private vanpools, defined as a voluntary arrangement in which the driver is compensated only for expenses.

Section 37.33 Airport Transportation Systems

Fixed route transportation systems operated by public airports are regarded by this section as fixed route commuter bus systems. As such, shuttles among terminals and parking lots, connector systems among the airport and a limited number of other local destinations must acquire accessible buses, but are not subject to complementary paratransit requirements. (If a public airport operates a demand responsive system for the general public, it would be subject to the rules for demand responsive systems for the general public.)

It should be noted that this section applies only to transportation services that are operated by public airports themselves (or by private contractors who stand in their shoes). When a regular urban mass transit system serves the airport, the airport is simply one portion of its service area, treated for purposes of this rule like the rest of its service area.

Virtually all airports are served by taxi companies, who are subject to §37.29 at airports as elsewhere. In addition, many airports are served by jitney or shuttle systems. Typically, these systems operate in a route-deviation or similar variable mode in which there are passenger-initiated decisions concerning destinations. We view such systems as demand responsive transportation operated by private entities primarily engaged in the business of transporting people.

Since many of these operators are small businesses, it may be difficult for them to meet equivalency requirements on their own without eventually having all or nearly all accessible vehicles, which could pose economic problems. One suggested solution to this problem is for the operators serving a given airport to form a pool or consortium arrangement, in which a number of shared accessible vehicles would meet the transportations of individuals with disabilities. As in other forms of transportation, such an arrangement would have to provide service in a nondiscriminatory way (e.g., in an integrated setting, no higher fares for accessible service).

Section 37.35 Supplemental Service for Other Transportation Modes

This section applies to a number of situations in which an operator of another transportation mode uses bus or other service to connect its service with limited other points.

One instance is when an intercity railroad route is set up such that the train stops outside the major urban center which is the actual destination for many passengers. Examples mentioned to us include bus service run by Amtrak from a stop in Columbus, Wisconsin, to downtown Madison, or from San Jose to San Francisco. Such service is fixed route, from the train station to a few points in the metropolitan area, with a schedule keyed to the train schedule. It would be regarded as commuter bus service, meaning that accessible vehicles would have to be acquired but complementary paratransit was not required.

Another instance is one in which a commuter rail operator uses fixed route bus service as a dedicated connection to, or extension of, its rail service. The service may go to park and ride lots or other destinations beyond the vicinity of the rail line. Again, this service shares the characteristics of commuter bus service that might be used even if the rail line were not present, and does not attempt to be a comprehensive mass transit bus service for the area.

Of course, there may be instances in which a rail operator uses demand responsive instead of fixed route service for a purpose of this kind. In that case, the demand responsive system requirements of the rule would apply.

Private entities (i.e., those operating places of public accommodation) may operate similar systems, as when a cruise ship operator provides a shuttle or connector between an airport and the dock. This service is covered by the rules governing private entities not primarily engaged in the business of transporting people. Fixed route or demand responsive rules apply, depending on the characteristics of the system involved.

One situation not explicitly covered in this section concerns *ad hoc* transportation arranged, for instance, by a rail operator when the train does not wind up at its intended destination. For example, an Amtrak train bound for Philadelphia may be halted at Wilmington by a track blockage between the two cities. Usually, the carrier responds by providing bus service to the scheduled destination or to the next point where rail service can resume.

The service that the carrier provides in this situation is essentially a continuation by other means of its primary service. We view the obligation of the rail operator as

being to ensure that all passengers, including individuals with disabilities, are provided service to the destination in a nondiscriminatory manner. This includes, for instance, providing service in the most integrated setting appropriate to the needs of the individual and service that gets a passenger with a disability to the destination as soon as other passengers.

Section 37.37 Other Applications

The ADA specifically defines ''public entity.'' Anything else is a ''private entity.'' The statute does not include in this definition a private entity that receives a subsidy or franchise from a state or local government or is regulated by a public entity. Only through the definition of ''operates'' (see discussion of §37.23) do private entities' relationships to public entities subject private entities to the requirements for public entities. Consequently, in deciding which provisions of the rule to apply to an entity in other than situations covered by §37.23, the nature of the entity—public or private—is determinative.

Transportation service provided by public accommodations is viewed as being provided by private entities not primarily engaged in the business of transporting people. Either the provisions of this part applicable to demand responsive or fixed route systems apply, depending on the nature of a specific system at a specific location. The distinction between fixed route and demand responsive systems is discussed in connection with the definitions section above. It is the responsibility of each private entity, in the first instance, to assess the nature of each transportation system on a case-by-case basis and determine the applicable rules.

On the other hand, conveyances used for recreational purposes, such as amusement park rides, ski lifts, or historic rail cars or trolleys operated in museum settings, are not viewed as transportation under this rule at all. Other conveyances may fit into this category as well.

The criterion for determining what requirements apply is whether the conveyances are primarily an aspect of the recreational experience itself or a means of getting from Point A to Point B. At a theme park, for instance, a large roller coaster (though a ''train'' of cars on a track) is a public accommodation not subject to this rule; the tram that transports the paying customers around the park, with a stop at the roller coaster, is a transportation system subject to the ''private, not primarily'' provisions of this part.

Employer-provided transportation for employees is not covered by this part, but by EEOC rules under title I of the ADA. (Public entities are also subject to DOJ's title II rules with respect to employment.) This exclusion from part 37 applies to transportation services provided by an employer (whether access to motor pool vehicles, parking shuttles, employer-sponsored van pools) that is made available solely to its own employees. If an employer provides service to its own employees and other persons, such as workers of other employers or customers, it would be subject to the requirements of this part from private entities not primarily engaged in the business of transporting people or public entities, as applicable.

The rule looks to the private entity actually providing the transportation service in question in determining whether the ''private, primarily'' or ''private, not primarily'' rules apply. For example, Conglomerate, Inc., owns a variety of agribusiness, petrochemical, weapons system production, and fast food corporations. One of its many subsidiaries, Green Tours, Inc., provides charter bus service for people who want to view national parks, old-growth forests, and other environmentally significant places. It is probably impossible to say in what business Conglomerate, Inc. is primarily engaged, but it clearly is not transporting people. Green Tours, Inc., on the other hand, is clearly primarily engaged in the business of transporting people, and the rule treats it as such.

On the other hand, when operating a transportation service off to the side of to the main business of a public accommodation (e.g., a hotel shuttle), the entity as a whole would be considered. Even if some dedicated employees are used to provide the service, shuttles and other systems provided as a means of getting to, from, or around a public accommodation remain solidly in the ''private, not primarily'' category.

SUBPART C—TRANSPORTATION FACILITIES

Section 37.41 Construction of Transportation Facilities by Public Entities

Section 37.41 contains the general requirement that all new facilities constructed after January 25, 1992, be accessible to and usable by individuals with disabilities. This provision tracks the statute closely, and is analogous to a provision in the DOJ regulations for private entities. Section 226 of the ADA provides little discretion in this requirement.

The requirement is keyed to construction which ''begins'' after January 25, 1992. The regulation defines ''begin'' to mean when a notice to proceed order has been issued. This term has a standard meaning in the construction industry, as an instruction to the contractor to proceed with the work.

Questions have been raised concerning which standards apply before January 26, 1992. There are Federal requirements that apply to all recipients of federal money, depending on the circumstances.

First, if an entity is a Federal recipient and uses Federal dollars to construct the facility, regulations implementing section 504 of the Rehabilitation Act of 1973 (29 U.S.C. 794), require the recipient to comply with the Uniform Federal Accessibility Standards.

Second, since the Civil Rights Restoration Act of 1987 (Pub. L. 100–259), an operation of a recipient of federal funds would also have to comply with section 504, even though the activity was not paid for with Federal funds. Thus, the Uniform Federal Accessibility Standards would apply to this construction as well.

As mentioned above, the Department intends, in the period before January 26, 1991, to view compliance with section 504 in light of compliance with ADA requirements (this point applies to alterations as well as new construction). Consequently, in reviewing requests for grants, contract approvals, exemptions, etc., (whether with respect to ongoing projects or new, experimental, or one-time efforts), the Department will, as a policy matter, seek to ensure compliance with ADA standards.

Section 37.43 Alteration of Transportation Facilities by Public Entities

This section sets out the accessibility requirements that apply when a public entity undertakes an alteration of an existing facility. In general, the section requires that any alteration, to the maximum extent feasible, results in the altered area being accessible to and usable by individuals with disabilities, including persons who use wheelchairs. The provisions follow closely those adopted by the DOJ, in its regulations implementing title III of the ADA.

The section requires specific activities whenever an alteration of an existing facility is undertaken.

First, if the alteration is made to a primary function area, (or access to an area containing a primary function), the entity shall make the alteration in such a way as to ensure that the path of travel to the altered area and the restrooms, telephones and drinking fountains servicing the altered area are readily accessible to and usable by individuals with disabilities, including individuals who use wheelchairs.

Second, alterations to drinking fountains, telephones, and restrooms do not have to be completed if the cost and scope of making them accessible is disproportionate.

Third, the requirement goes into effect for alterations begun after January 25, 1992.

Fourth, the term ''maximum extent feasible'' means that all changes that are possible must be made. The requirement to make changes to the maximum extent feasible derives from clear legislative history. The Senate Report states—

The phrase ''to the maximum extent feasible'' has been included to allow for the occasional case in which the nature of an existing facility is such as to make it virtually impossible to renovate the building in a manner that results in its being entirely accessible to and usable by individuals with disabilities. In all such cases, however, the alteration should provide the maximum amount of physical accessibility feasible.

Thus, for example the term ''to the maximum extent feasible'' should be construed as not requiring entities to make building alterations that have little likelihood of being accomplished without removing or altering a load-bearing structural member unless the load-bearing structural member is otherwise being removed or altered as part of the alteration. (S. Rept. 101–116, at 68).

Fifth, primary function means a major activity for which the facility is intended. Primary function areas include waiting areas, ticket purchase and collection areas, train or bus platforms, baggage checking and return areas, and employment areas (with some exceptions stated in the rule, for areas used by service personnel that are very difficult to access).

Sixth, ''path of travel'' means a continuous, unobstructed way of pedestrian passage by means of which the altered area may be approached, entered, and exited, and which connects the altered area with an exterior approach and includes restrooms, telephones, and drinking fountains serving the altered area. If changes to the path of travel are disproportionate, then only those changes which are not disproportionate are to be completed.

Seven, the final rule specifies that costs exceeding 20 percent would be disproportionate. This is consistent with the DOJ. In determining costs, the Department intends costs to be based on changes to the passenger service area that is scheduled for alteration.

Finally, the Department has defined the term ''begin'', in the context of begin an alteration that is subject to the alteration provision to mean when a notice to proceed or work order is issued. Two terms are used (instead of only notice to proceed in the context of new construction) because many alterations may be carried out by the entity itself, in which case the only triggering event would be a work order or similar authorization to begin.

In looking at facility concepts like ''disproportionality'' and ''to the maximum extent feasible,'' the Department will consider any expenses related to accessibility for passengers. It is not relevant to consider non-passenger related improvements (e.g., installing a new track bed) or to permit ''gold-plating'' (attributing to accessibility costs the expense of non-related improvements, such as charging to accessibility costs the price of a whole new door, when only adding a new handle to the old door was needed for accessibility).

Section 37.47 Key Stations in Light and Rapid Rail Systems

Section 37.49 Designation of Responsible Person(s) for Intercity and Commuter Rail Stations

This section sets forth a mechanism for determining who bears the legal and financial responsibility for accessibility modifications to a commuter and/or intercity rail station. The final provision of the section is the most important. It authorizes all concerned parties to come to their own agreement concerning the allocation of responsibility. Such an agreement can allocate responsibility in any way acceptable to the parties. The Department strongly encourages parties to come to such an agreement.

In the absence of such an agreement, a statutory/regulatory scheme allocates responsibility. In the first, and simplest, situation posed by the statute, a single public entity owns more than 50 percent of the station. In this case, the public entity is the responsible person and nobody else is required to bear any of the responsibility.

In the second situation, a private entity owns more than 50 percent of the station. The private entity need not bear any of the responsibility for making the station accessible. A public entity owner of the station, who does not operate passenger railroad service through the station, is not required to bear any of the responsibility for making the station accessible. The total responsibility is divided between passenger railroads operating service through the station, on the basis of respective passenger boardings. If there is only one railroad operating service through the station, it bears the total responsibility.

The Department believes that reference to passenger boardings is the most equitable way of dividing responsibility among railroads, since the number of people drawn to the station by each is likely to reflect ''cost causation'' quite closely. The Department notes, however, that, as passenger boarding percentages change over time, the portion of responsibility assigned to each party also may change. Station modifications may involve long-term capital investment and planning, while passenger boarding percentages are more volatile. Some railroads may stop serving a station, while others may begin service, during the period of time before modifications to the station are complete. To help accommodate such situations, the rule refers to passenger boardings ''over the entire period during which the station is made accessible.''

This language is intended to emphasize that as circumstances change, the parties involved have the responsibility to adjust their arrangements for cost sharing. For example, suppose Railroad A has 30 percent of the passenger boardings in year 1, but by year 10 has 60 percent of the boardings. It would not be fair for Railroad A to pay only 30 percent of the costs of station modifications occurring in later years. Ultimately, the total cost burden for modifying the station over (for example) 20 years would be allocated on the share of the total number or boardings attributable to each railroad over the whole 20 year period, in order to avoid such unfairness.

The third, and most complicated, situation is one in which no party owns 50 percent of the station. For example, consider the following hypothetical situation:

Party	Ownership percentage	Boardings percentage
Private freight RR	40	0
City	30	0
Amtrak	0	25
Commuter A	30	50
Commuter B	0	25

The private freight railroad drops out of the calculation of who is responsible. All of the responsibility would be allocated among four public entities: the city (a public entity who does not operate railroad service), Amtrak, and the two commuter railroads. Half the responsibility would go to public entity owners of the station (whether or not they are railroads who run passenger service through the station). The other half of the responsibility would go to railroads who run passenger service through the station (whether or not they are station owners).

On the ownership side of the equation, the city and Commuter A each own half of that portion of the station that is not owned by the private freight railroad. Therefore, the two parties divide up the ownership half of the responsibility equally. Based on their ownership interest, each of these two parties bears 25 percent of the responsibility for the entire station. Note that, should ownership percentages or owners change over the period during which the station is to be made accessible, these percentages may change. It is ownership percentage over this entire period that ultimately determines the percentage of responsibility.

On the passenger rail operations side of the equation, 50 percent of passenger boardings are attributable to Commuter A and 25 percent each to Commuter B and Amtrak. Therefore, half of this portion of the responsibility belongs to Commuter A, while a quarter share each goes to the other railroads. This means that, based on passenger boardings, 25 percent of the responsibility goes to Commuter A, 12.5 percent to Commuter B, and 12.5 percent to Amtrak. Again, it is the proportion of passenger boardings over the entire length of the period during which the station is made accessible that ultimately determines the percentage of responsibility.

In this hypothetical, Commuter A is responsible for a total of 50 percent of the responsibility for the station. Commuter A is responsible for 25 percent of the responsibility because of its role as a station owner and another 25 percent because of its operation of passenger rail service through the station.

The Department recognizes that there will be situations in which application of this scheme will be difficult (e.g., involving problems with multiple owners of a station whose ownership percentages may be difficult to ascertain). The Department again emphasizes that agreement among the parties is the best way of resolving these problems, but we are willing to work with the parties to ensure a solution consistent with this rule.

Section 37.51 Key Stations in Commuter Rail Systems

These sections require that key stations in light, rapid, and commuter rail systems be made accessible as soon as practicable, but no later than July 26, 1993. Being made accessible, for this purpose, means complying with the applicable provisions of appendix A to this part. ''As soon as practicable'' means that, if modification can be made before July 26, 1993, they must be. A rail operator that failed to make a station accessible by July 1993 would be in noncompliance with the ADA and this rule, except in a case where an extension of time had been granted.

What is a key station? A key station is one designated as such by the commuter authority or light/rapid rail operator, through the planning process and public participation process set forth in this section. The five criteria listed in the regulation are intended to guide the selection process but, while the entity must take these criteria into account (and this consideration must be reflected in the planning process and documents), they are not mandatory selection standards. That is, it is not required that every station that meets one of the criteria be designated as a key station. Since the criteria are not mandatory selection standards, the understanding of their terms is also a matter appropriately left to the planning process. A tight, legalistic definition is not necessary in the context of factors intended for consideration. For instance, what constitutes a major activity center or how close a station needs to be to another station to not be designated as key depend largely on local factors that it would not be reasonable to specify in this rule.

Given the wide discretion permitted to rail operators in identifying key stations, there would be no objection to identifying as a key station a new (presumably accessible) station now under construction. Doing so would involve consideration of the key station criteria and would be subject to the planning/public participation process.

If an extension to a rail system (e.g., a commuter system) is made, such that the system comes to include existing inaccessible stations that have not previously been part of the system, the Department construes the ADA to require application of key station accessibility in such a situation. The same would be true for a new start commuter rail system that began operations using existing stations. Key station planning, designation of key stations, and with being consistent with the ADA would be required. The Department would work with the commuter authority involved on a case-by-case basis to determine applicable time limits for accessibility, consistent with the time frames of the ADA.

The entity must develop a compliance plan, subject to the public participation and planning process set forth in paragraph (d) of each of these sections. Note that this plan must be completed by July 26, 1992, not January 26, 1992, as in the case of paratransit plans. The key station plans must be submitted to FTA at that time. (The statute does not require FTA approval of the plans, however.).

A rail operator may request an extension of the July 1993 completion deadline for accessibility modifications to one or more key stations. The extension for light and rapid rail stations can be up to July 2020, though two thirds of the key stations (per the legislative history of the statute, selected in a way to maximize accessibility to the whole system) must be accessible by July 2010.

Commuter rail stations can be extended up to July 2010.

Requests for extension of time must be submitted by July 26, 1992. FTA will review the requests on a station-by-station basis according to the statutory criterion, which is whether making the station accessible requires extraordinarily expensive alterations. An extraordinarily expensive alteration is raising the entire platform, installing an elevator, or making another alteration of similar cost and magnitude. If another means of making a station accessible (e.g., installation of a mini-high platform in a station where it is not necessary to install an elevator or to provide access to the platform for wheelchair users), then an extension can be granted only if the rail operator shows that the cost and magnitude of the alteration is similar to that of an elevator installation or platform raising.

The rule does not include a specific deadline for FTA consideration of an extension request. However, since we are aware that, in the absence of an extension request, accessibility must be completed by July 1993, we will endeavor to complete review of plans as soon as possible, to give as much lead time as possible to local planning and implementation efforts.

Once an extension is granted, the extension applies to all accessibility modifications in the station. However, the rail operator should not delay non-extraordinarily expensive modifications to the station. The key station plan and any extension request should include a schedule for phasing in non-extraordinarily expensive modifications to the station. For example, even if a key station is not going to be accessible to wheelchair users for 15 years, pending the installation of an elevator, the rail operator can improve its accessibility to persons with visual impairments by installing tactile strips.

An extension cannot be granted except for a particular station which needs an extraordinarily expensive modification. An extension cannot be granted non-extraordinarily expensive changes to Station B because the extraordinarily expensive changes to Station A will absorb many resources. Non-extraordinarily expensive changes, however costly considered collectively for a system, are not, under the statute, grounds for granting an extension to one or more stations or the whole system. Only particular stations where an extraordinarily expensive modification must be made qualify for extensions.

The FTA Administrator can approve, modify, or disapprove any request for an extension. For example, it is not a forgone conclusion that a situation for which an extension is granted will have the maximum possible extension granted. If it appears that the rail operator can make some stations accessible sooner, FTA can grant an extension for a shorter period (e.g., 2005 for a particular station rather than 2010).

Section 37.53 Exception for New York and Philadelphia

Consistent with the legislative history of the ADA, this section formally recognizes the selection of key stations in two identified litigation settlement agreements in New York and Philadelphia as in compliance with the ADA. Consequently, the entities involved can limit their key station planning process to issues concerning the timing of key station accessibility. The section references also §37.9, which provides that key station accessibility alterations which have already been made, or which are begun before January 26, 1992, and which conform to specified prior standards, do not have to be re-modified. On the other hand, alterations begun after January 25, 1992 (including forthcoming key station modifications under the New York and Philadelphia agreements), must meet the requirements of appendix A to this part.

This is an exception only for the two specified agreements. There are no situations in which other cities can take advantage of this provision. Nor are the provisions of the two agreements normative for other cities. Other cities must do their own planning, with involvement from local citizens, and cannot rely on agreements unique to New York and Philadelphia to determine the appropriate number of percentage of key stations or other matters.

Section 37.57 Required Cooperation

This section implements §242(e)(2)(C) of the ADA, which treats as discrimination a failure, by an owner or person in control of an intercity rail station, to provide reasonable cooperation to the responsible persons' efforts to comply with accessibility requirements. For example, the imposition by the owner of an unreasonable insurance bond from the responsible person as a condition of making accessibility modifications would violate this requirement. See H. Rept. 101–485 at 53.

The statute also provides that failure of the owner or person in control to cooperate does not create a defense to a discrimination suit against the responsible person, but the responsible person would have a third party action against the uncooperative owner or person in control. The rule does not restate this portion of the statute in the regulation, since it would be implemented by the courts if such an action is brought. Since cooperation is also a regulatory requirement, however, the Department could entertain a section 504 complaint against a recipient of Federal funds who failed to cooperate.

The House Energy and Commerce Committee provided as an example of an action under this provision a situation in which a failure to cooperate leads to a construction delay, which in turn leads to a lawsuit by an individual with disabilities against the responsible person for missing an accessibility deadline. The responsible person could not use the lack of cooperation as a defense in the lawsuit, but the uncooperative party could be made to indemnify the responsible person for damages awarded the plaintiff. Also, a responsible person could obtain an injunction to force the recalcitrant owner or controller of the station to permit accessibility work to proceed. (*Id.*)

This provision does not appear to be intended to permit a responsible person to seek contribution for a portion of the cost of accessibility work from a party involved with the station whom the statute and §37.49 do not identify as a responsible person. It simply provides a remedy for a situation in which someone impedes the responsible person's efforts to comply with accessibility obligations.

Section 37.59 Differences in Accessibility Completion Date Requirements

Portions of the same station may have different accessibility completion date requirements, both as the result of different statutory time frames for different kinds of stations and individual decisions made on requests for extension. The principle at work in responding to such situations is that if part of a station may be made accessible after another part, the ''late'' part of the work should not get in the way of people's use of modifications resulting from the ''early'' part.

For example, the commuter part of a station may have to be made accessible by July 1993 (e.g., there is no need to install an elevator, and platform accessibility can be achieved by use of a relatively inexpensive mini-high platform). The Amtrak portion of the same station, by statute, is required to be accessible as soon as practicable, but no later than July 2010. If there is a common entrance to the station, that commuter rail passengers and Amtrak passengers both use, or a common ticket counter, it would have to be accessible by July 1993. If there were a waiting room used by Amtrak passengers but not commuter passengers (who typically stand and wait on the platform at this station), it would not have to be accessible by July 1993, but if the path from the common entrance to the commuter platform went through the waiting room, the path would have to be an accessible path by July 1993.

Section 37.61 Public Transportation Programs and Activities in Existing Facilities

This section implements section 228(a) of the ADA and establishes the general requirement for entities to operate their transportation facilities in a manner that, when viewed in its entirety, is accessible to and usable by individuals with disabilities. The section clearly excludes from this requirement access by persons in wheelchairs, unless these changes would be necessitated by the alterations or key station provisions.

This provision is intended to cover activities and programs of an entity that do not rise to the level of alteration. Even if an entity is not making alterations to a facility, it has a responsibility to conduct its program in an accessible manner. Examples of possible activities include user friendly farecards, schedules, of edge detection on rail platforms, adequate lighting, telecommunication display devices (TDDs) or text telephones, and other accommodations for use by persons with speech and hearing impairments, signage for people with visual impairments, continuous pathways for persons with visual and ambulatory impairments, and public address systems and clocks.

The Department did not prescribe one list of things that would be appropriate for all stations. For example, we believe that tactile strips are a valuable addition to platforms which have drop-offs. We also believe that most larger systems, to the extent they publish schedules, should make those schedules readily available in alternative formats. We encourage entities to find this another area which benefits from its commitment to far-reaching public participation efforts.

SUBPART D—ACQUISITION OF ACCESSIBLE VEHICLES BY PUBLIC ENTITIES

Section 37.71 Purchase or Lease of New Non-Rail Vehicles by Public Entities Operating Fixed Route Systems

This section sets out the basic acquisition requirements for a public entity purchasing a new vehicle. Generally, the section requires any public entity who purchases or leases a new vehicle to acquire an accessible vehicle. There is a waiver provision if lifts are unavailable and these provisions track the conditions in the ADA. One statutory condition, that the public entity has made a good faith effort to locate a qualified manufacturer to supply the lifts, presumes a direct relationship between the transit provider and the lift manufacturer. In fact, it is the bus manufacturer, rather than the transit provider directly, who would have the task of looking for a supplier of lifts to meet the transit provider's specifications. The task must still be performed, but the regulation does not require the transit provider to obtain actual information about available lifts. Rather the bus manufacturer obtains the information and provides this assurance to the entity applying for the waiver, and the entity may rely on this representation. More specifically, the regulation requires that each waiver request must include a copy of the written solicitation (showing that it requested lift-equipped vehicles) and written responses from lift manufacturers to the vehicle manufacturer documenting their inability to provide the lifts. The information from the lift manufacturer must also include when the lifts will be available.

In addition, the waiver request must include copies of advertisements in trade publications and inquiries to trade associations seeking lifts for the buses. The public entity also must include a full justification for the assertion that a delay in the bus procurement sufficient to obtain a lift-equipped bus would significantly impair transportation services in the community. There is no length of time that would be a *per se* delay constituting a ''significant impairment''. It will be more difficult to obtain a waiver if a relatively short rather than relatively

lengthy delay is involved. A showing of timetables, absent a showing of significant impairment of actual transit services, would not form a basis for granting a waiver.

Any waiver granted by the Department under this provision will be a conditional waiver. The conditions are intended to ensure that the waiver provision does not create a loophole in the accessible vehicle acquisition requirement that Congress intended to impose. The ADA requires a waiver to be limited in duration and the rule requires a termination date to be included. The date will be established on the basis of the information the Department receives concerning the availability of lifts in the waiver request and elsewhere. In addition, so that a waiver does not become open-ended, it will apply only to a particular procurement. If a transit agency wants a waiver for a subsequent delivery of buses in the procurement, or another procurement entirely, it will have to make a separate waiver request.

For example, if a particular order of buses is delivered over a period of time, each delivery would be the potential subject of a waiver request. First, the entity would request a waiver for the first shipment of buses. If all of the conditions are met, the waiver would be granted, with a date specified to coincide with the due date of the lifts. When the lifts become available those buses would have to be retrofitted with the lifts. A subsequent delivery of buses—on the same order—would have to receive its own waiver, subject to the same conditions and specifications of the first waiver.

The purpose of the waiver, as the Department construes it, is to address a situation in which (because of a sudden increase in the number of lift-equipped buses requested) lift manufacturers are unable to produce enough lifts to meet the demand in a timely fashion.

Section 37.73 Purchase or Lease of Used Non-Rail Vehicles by Public Entities Operating a Fixed Route System

The basic rule is that an acquisition of a used vehicle would have to be for an accessible vehicle.

There is an exception, however, for situations in which the transit provider makes a good faith effort to obtain accessible used vehicles but does not succeed in finding them. The ADA requires transit agencies to purchase accessible used vehicles, providing a ''demonstrated good faith efforts'' exception to the requirement. The reports of the Senate Committee on Labor and Human Resources and the House Committee on Education and Labor offered the following guidance on what ''good faith efforts'' involve:

The phrase ''demonstrated good faith efforts'' is intended to require a nationwide search and not a search limited to a particular region. For instance, it would not be enough for a transit operator to contact only the manufacturer where the transit authority usually does business to see if there are accessible used buses. It involves the transit authority advertising in a trade magazine, i.e., Passenger Transport, or contacting the transit trade association, American Public Transit Association (APTA), to determine whether accessible used vehicles are available. It is the Committee's expectation that as the number of buses with lifts increases, the burden on the transit authority to demonstrate its inability to purchase accessible vehicles despite good faith efforts will become more and more difficult to satisfy. S. Rept. 101–116 at 49; H. Rept. 101–485 at 90.

Consistent with this guidance, this section requires that good faith efforts include specifying accessible vehicles in bid solicitations. The section also requires that the entity retain for two years documentation of that effort, and that the information be available to FTA and the public.

It does not meet the good faith efforts requirement to purchase inaccessible, rather than accessible, used buses, just because the former are less expensive, particularly if the difference is a difference attributable to the presence of a lift. There may be situations in which good faith efforts involve buying fewer accessible buses in preference to more inaccessible buses.

The public participation requirements involved in the development of the paratransit plans for all fixed route operators requires an ongoing relationship, including extensive outreach, to the community likely to be using its accessible service. We believe that it will be difficult to comply with the public participation requirements and not involve the affected community in the decisions concerning the purchase or lease of used accessible vehicles.

There is an exception to these requirements for donated vehicles. Not all ''zero dollar'' transfers are donations, however. The legislative history to this provision provides insight.

It is not the Committee's intent to make the vehicle accessibility provisions of this title applicable to vehicles donated to a public entity. The Committee understands that it is not usual to donate vehicles to a public entity. However, there could be instances where someone could conceivably donate a bus to a public transit operator in a will. In such a case, the transit operators should not be prevented from accepting a gift.

The Committee does not intend that this limited exemption for donated vehicles be used to circumvent the intent of the ADA. For example, a local transit authority could not arrange to be the recipient of donated inaccessible buses. This would be a violation of the ADA. S. Rpt. 101–116, at 46; H. Rpt. 101–486, at 87.

Entities interested in accepting donated vehicles must submit a request to FTA to verify that the transaction is a donation.

There is one situation, in which a vehicle has prior use is not treated as a used vehicle. If a vehicle has been remanufactured, and it is within the period of the extension of its useful life, it is not viewed as a used vehicle (see H. Rept. 101–485, Pt 1 at 27). During this period, such a vehicle may be acquired by another entity without going through the good faith efforts process. This is because, at the time of its remanufacture, the bus would have been made as accessible if feasible. When the vehicle has completed its extended useful life (e.g., the beginning of year six when its useful life has extended five years), it becomes subject to used bus requirements.

Section 37.75 Remanufacture of Non-Rail Vehicles and Purchase or Lease of Remanufactured Non-rail Vehicles by Public Entities Operating Fixed Route Systems

This section tracks the statute closely, and contains the following provisions. First, it requires any public entity operating a fixed route system to purchase an accessible vehicle if the acquisition occurs after August 25, 1990, if the vehicle is remanufactured after August 25, 1990, or the entity contracts or undertakes the remanufacture of a vehicle after August 25, 1990. The ADA legislative history makes it clear that remanufacture is to include changes to the structure of the vehicle which extend the useful life of the vehicle for five years. It clearly is not intended to capture things such as engine overhauls and the like.

The term remanufacture, as used in the ADA context, is different from the use of the term in previously issued FTA guidance. The term has a specific meaning under the ADA: there must be structural work done to the vehicle and the work must extend the vehicle's useful life by five years.

The ADA imposes no requirements on what FTA traditionally considers bus rehabilitation. Such work involves rebuilding a bus to original specifications and focuses on mechanical systems and interiors. Often this work includes replacing components. It is less extensive than remanufacture.

The statute, and the rule, includes an exception for the remanufacture of historical vehicles. This exception applies to the remanufacture of or purchase of a remanufactured vehicle that (1) is of historic character; (2) operates solely on a segment of a fixed route system which is on the National Register of Historic Places; and (3) making the vehicle accessible would significantly alter the historic character of the vehicle. The exception only extends to the remanufacture that would alter the historic character of the vehicle. All modifications that can be made without altering the historic character (such as slip resistant flooring) must be done.

Section 37.77 Purchase or Lease of New Non-Rail Vehicles by Public Entities Operating a Demand Responsive System for the General Public

Section 224 of the ADA requires that a public entity operating a demand responsive system purchase or lease accessible new vehicles, for which a solicitation is made after August 25, 1990, unless the system, when viewed in its entirety, provides a level of service to individuals with disabilities, including individuals who use wheelchairs, equivalent to the level of service provided to individuals without disabilities. This section is the same as the October 4, 1990 final rule which promulgated the immediately effective acquisition requirements of the ADA.

The Department has been asked to clarify what ''accessible when viewed in its entirety'' means in the context of a demand responsive system being allowed to purchase an inaccessible vehicle. First, it is important to note that this exception applies only to demand responsive systems (and not fixed route systems). The term ''equivalent service'' was discussed during the passage of the ADA. Material from the legislative history indicates that ''when viewed in its entirety/equivalent service'' means that ''when all aspects of a transportation system are analyzed, equal opportunities for each individual with a disability to use the transportation system must exist. (H. Rept. 101–184, Pt. 2, at 95; S. Rept. 101–116 at 54). For example, both reports said that ''the time delay between a phone call to access the demand responsive system and pick up the individual is not greater because the individual needs a lift or ramp or other accommodation to access the vehicle.'' (*Id.*)

Consistent with this, the Department has specified certain service criteria that are to be used when determining if the service is equivalent. As in previous rulemakings on this provision, the standards (which include service area, response time, fares, hours and days of service, trip purpose restrictions, information and reservations capability, and other capacity constraints) are not absolute standards. They do not say, for example, that a person with a disability must be picked up in a specified number of hours. The requirement is that there must be equivalent service for all passengers, whether or not they have a disability. If the system provides service to persons without disabilities within four hours of a call for service, then passengers with disabilities must be afforded the same service.

The Department has been asked specifically where an entity should send its ''equivalent level of service'' certifications. We provide the following: Equivalent level of service certifications should be submitted to the state program office if you are a public entity receiving FTA funds through the state.

All other entities should submit their equivalent level of service certifications to the FTA regional office (listed in appendix B of this part). Certifications must be submitted before the acquisition of the vehicles.

Paragraph (e) of this section authorizes a waiver for the unavailability of lifts. Since demand responsive systems need not purchase accessible vehicles if they can certify equivalent service, the Department has been asked what this provision is doing in this section.

Paragraph (e) applies in the case in which an entity operates a demand responsive system, which is not equivalent, and the entity cannot find accessible vehicles to acquire. In this case, the waiver provisions applicable to a fixed route entity purchasing or leasing inaccessible new vehicles applies to the demand responsive operator as well.

Section 37.79 Purchase or Lease of New Rail Vehicles by Public Entities Operating Rapid or Light Rail Systems

This section echoes the requirement of §37.71—all new rail cars must be accessible.

Section 37.81 Purchase or Lease of Used Rail Vehicles by Public Entities Operating Rapid or Light Rail Systems

This section lays out the requirements for a public entity acquiring a used rail vehicle. The requirements and standards are the same as those specified for non-rail vehicles in §37.73. While we recognize it may create difficulties for entities in some situations, the statute does not include any extension or short-term leases. The Department will consider, in a case-by-case basis, how the good faith efforts requirement would apply in the case of an agreement between rail carriers to permit quick-response, short-term leases of cars over a period of time.

Section 37.83 Remanufacture of Rail Vehicles and Purchase or Lease of Remanufactured Rail Vehicles by Public Entities Operating Rapid or Light Rail System

This section parallels the remanufacturing section for buses, including the exception for historical vehicles. With respect to an entity having a class of historic vehicles that may meet the standards for the historic vehicle exception (e.g., San Francisco cable cars), the Department would not object to a request for application of the exception on a system-wide, as approved to car-by-car, basis.

Section 37.85 Purchase or Lease of New Intercity and Commuter Rail Cars

This section incorporates the statutory requirement that new intercity and commuter rail cars be accessible. The specific accessibility provisions of the statute (for example, there are slightly different requirements for intercity rail cars versus commuter rail cars) are specified in part 38 of this regulation. These standards are adopted from the voluntary guidelines issues by the Access Board. The section basically parallels the acquisition requirements for buses and other vehicles. It should be noted that the definition of commuter rail operator clearly allows for additional operators to qualify as commuter, since the definition describes the functional characteristics of an operator, as well as listing existing commuter rail operators.

We would point out that the ADA applies this requirement to all new vehicles. This includes not only vehicles and systems that currently are being operated in the U.S., but new, experimental, or imported vehicles and systems. The ADA does not stand in the way of new technology, but it does require that new technology, and the benefits it brings, be accessible to all persons, including those with disabilities. This point applies to all vehicle acquisition provisions of this regulation, whether for rail or non-rail, private or public, fixed route or demand responsive vehicles and systems.

Section 37.87 Purchase or Lease of Used Intercity and Commuter Rail Cars

The section also parallels closely the requirements in the ADA for the purchase or lease of accessible used rail vehicles. We acknowledge that, in some situations, the statutory requirement for to make good faith efforts to acquire accessible used vehicles may create difficulties for rail operators attempting to lease rail cars quickly for a short time (e.g., as fill-ins for cars which need repairs). In some cases, it may be possible to mitigate these difficulties through means such as making good faith efforts with respect to an overall agreement between two rail operators to make cars available to one another when needed, rather than each time a car is provided under such an agreement.

Section 37.89 Remanufacture of Intercity and Commuter Rail Cars

This section requires generally that remanufactured cars be made accessible, to the maximum extent feasible. Feasible is defined in paragraph (c) of the section to be ''unless an engineering analysis demonstrates that remanufacturing the car to be accessible would have a significant adverse effect on the structural integrity of the car.'' Increased cost is not a reason for viewing other sections of this subpart concerning remanufactured vehicles.

In addition, this section differs from the counterpart sections for non-rail vehicles and light and rapid rail vehicles in two ways. First, the extension of useful life needed to trigger the section is ten rather than five

years. Second, there is no historic vehicle exception. Both of these differences are statutory.

Remanufacture of vehicles implies work that extends their expected useful life of the vehicle. A mid-life overhaul, not extending the total useful life of the vehicle, would not be viewed as a remanufacture of the vehicle.

Section 37.93 One Car Per Train Rule

This section implements the statutory directive that all rail operators (light, rapid, commuter and intercity) have at least one car per train accessible to persons with disabilities, including individuals who use wheelchairs by July 26, 1995. (See ADA sections 242(a)(1), 242(b)(1), 228(b)(1).) Section 37.93 contains this general requirement. In some cases, entities will meet the one-car-per train rule through the purchase of new cars. In this case, since all new rail vehicles have to be accessible, compliance with this provision is straightforward.

However, certain entities may not be purchasing any new vehicles by July 26, 1995, or may not be purchasing enough vehicles to ensure that one car per train is accessible. In these cases, these entities will have to retrofit existing cars to meet this requirement. What a retrofitted car must look like to meet the requirement has been decided by the Access Board. These standards are contained in part 38 of this rule.

We would point that, consistent with the Access Board standards, a rail system using mini-high platforms or wayside lifts is not required, in most circumstances, to ''double-stop'' in order to give passengers a chance to board the second or subsequent car in a train at the mini-high platform or way-side lift. The only exception to this would be a situation in which all the wheelchair positions spaces in the first car were occupied. In this case, the train would have to double-stop to allow a wheelchair user to board, rather than passing the person by when there was space available in other than the first car.

Section 37.95 Ferries and Other Passenger Vessels

Although at this time there are no specific requirements for vessels, ferries and other passenger vessels operated by public entities are subject to the requirements of §37.5 of this part and applicable requirements of 28 CFR part 35, the DOJ rule under title II of the ADA.

SUBPART E—ACQUISITION OF ACCESSIBLE VEHICLES BY PRIVATE ENTITIES

Section 37.101 Purchase or Lease of Non-Rail Vehicles by Private Entities Not Primarily Engaged in the Business of Transporting People

Section 37.103 Purchase or Lease of New Non-Rail Vehicles by Private Entities Primarily Engaged in the Business of Transporting People

Section 37.105 Equivalent Service Standard

The first two sections spell out the distinctions among the different types of service elaborated in the ADA and requirements that apply to them. For clarity, we provide the following chart.

PRIVATE ENTITIES ''NOT PRIMARILY ENGAGED''

System type	Vehicle capacity	Requirement
Fixed Route	Over 16	Acquire accessible vehicle.
Fixed Route	16 or less	Acquire accessible vehicle, or equivalency.
Demand Responsive.	Over 16	Acquire accessible vehicle, or equivalency.
Demand Responsive.	16 or less	Equivalency—see §37.171.

PRIVATE ENTITIES ''PRIMARILY ENGAGED''

System type	Vehicle type/capacity	Requirement
Fixed route	All new vehicles except auto, van with less than 8 capacity, or over the road bus.	Acquire accessible vehicle.
Demand responsive.	Same as above	Acquire accessible vehicle, or equivalency.
Either fixed route or demand responsive.	New vans with a capacity of less than 8.	Same as above.

Equivalency, for purposes of these requirements, is spelled out in §37.105. It is important to note that some portions of this section (referring to response time, reservations capacity, and restrictions on trip purpose) apply only to demand responsive systems. Another provision (schedules/headways) applies only to fixed route systems. This is because these points of comparison apply only to one or the other type system. The remaining provisions apply to both kinds of systems.

In applying the provisions this section, it is important to note that they are only points of comparison, not substantive criteria. For example, unlike the response time criterion of §37.131, this section does not require that a system provide any particular response time. All it says is that, in order for there to be equivalency, if the demand responsive system gets a van to a non-disabled person in 2 hours, or 8 hours, or a week and a half after a call for service, the system must get an accessible van to a person with a disability in 2 hours, or 8 hours, or a week and a half.

The vehicle acquisition and equivalency provisions work together in the following way. A private entity is about to acquire a vehicle for a transportation service in one of the categories to which equivalency is relevant. The entity looks at its present service (considered without regard to the vehicle it plans to acquire). Does the present service meet the equivalency standard? (In answering this question, the point of reference is the next potential customer who needs an accessible vehicle. The fact that such persons have not called in the past is irrelevant). If not, the entity is required to acquire an accessible vehicle. If so, the entity may acquire an accessible or an inaccessible vehicle. This process must be followed every time the entity purchases or leases a vehicle. Given changes in the mixes of both customers and vehicles, the answer to the question about equivalency will probably not be the same for an entity every time it is asked.

One difference between the requirements for ''private, not primarily'' and ''private, primarily'' entities is that the requirements apply to all vehicles purchased or leased for the former, but only to new vehicles for the latter. This means that entities in the latter category are not required to acquire accessible vehicles when they purchase or lease used vehicles. Another oddity in the statute which entities should note is that the requirement for ''private, primarily'' entities to acquire accessible vans with less than eight passenger capacity (or provide equivalent service) does not become effective until after February 25, 1992 (This also date also applies no private entities ''primarily engaged'' which purchase passenger rail cars). All other vehicle acquisition requirements became effective after August 25, 1990.

The Department views the line between ''private, primarily'' and ''private, not primarily'' entities as being drawn with respect to the bus, van, or other service which the entity is providing. For example, there is an obvious sense in which an airline or car rental company is primarily engaged in the business of transporting people. If the airline or car rental agency runs a shuttle bus from the airport terminal to a downtown location or a rental car lot, however, the Department views that shuttle service as covered by the ''private, not primarily'' requirements of the rule (see discussion of the Applicability sections above). This is because the airline or car rental agency is not primarily engaged in the business of providing transportation by bus or van. The relationship of the bus or van service to an airline's main business is analogous to that of a shuttle to a hotel. For this purpose, it is of only incidental interest that the main business of the airline is flying people around the country instead of putting them up for the night.

Section 37.109 Ferries and Other Passenger Vessels

Although at this time there are no specific requirements for vessels, ferries and other passenger vessels operated by private entities are subject to the requirements of §37.5 of this part and applicable requirements of 28 CFR part 36, the DOJ rule under title III of the ADA.

SUBPART F—PARATRANSIT AS A COMPLEMENT TO FIXED ROUTE SERVICE

Section 37.121 Requirement for Comparable Complementary Paratransit Service

This section sets forth the basic requirement that all public entities who operate a fixed route system have to provide paratransit service that is both comparable and complementary to the fixed route service. By ''complementary,'' we mean service that acts as a ''safety net'' for individuals with disabilities who cannot use the fixed route system. By ''comparable,'' we mean service that meets the service criteria of this subpart.

This requirement applies to light and rapid rail systems as well as to bus systems, even when rail and bus systems share all or part of the same service area. Commuter bus, commuter rail and intercity rail systems do not have to provide paratransit, however. The remaining provisions of subpart F set forth the details of the eligibility requirements for paratransit, the service criteria that paratransit systems must meet, the planning process involved, and the procedures for applying for waivers based on undue financial burden.

Paratransit may be provided by a variety of modes. Publicly operated dial-a-ride vans, service contracted out to a private paratransit provider, user-side subsidy programs, or any combination of these and other approaches is acceptable. Entities who feel it necessary to apply for an undue financial burden waiver should be aware that one of the factors FTA will examine in evaluating waiver requests is efficiencies the provider could realize in its paratransit service. Therefore, it is important for entities in this situation to use the most economical and efficient methods of providing paratransit they can devise.

It is also important for them to establish and consistently implement strong controls against fraud, waste and abuse in the paratransit system. Fraud, waste and abuse can drain significant resources from a system and control of these problems is an important ''efficiency for any paratransit system. It will be difficult for the Department to grant an undue financial burden waiver to entities which do not have a good means of determining if fraud, waste and abuse are problems and adequate methods of combating these problems, where they are found to exist.

Section 37.123 ADA Paratransit Eligibility—Standards

General Provisions

This section sets forth the minimum requirements for eligibility for complementary paratransit service. All fixed route operators providing complementary paratransit must make service available at least to individuals meeting these standards. The ADA does not prohibit providing paratransit service to anyone. Entities may provide service to additional persons as well. Since only service to ADA eligible persons is required by the rule, however, only the costs of this service can be counted in the context of a request for an undue financial burden waiver.

When the rule says that ADA paratransit eligibility shall be strictly limited to persons in the eligible categories, then, it is not saying that entities are in any way precluded from serving other people. It is saying that the persons who must be provided service, and counting the costs of providing them service, in context of an undue burden waiver, are limited to the regulatory categories.

TEMPORARY DISABILITIES

Eligibility may be based on a temporary as well as a permanent disability. The individual must meet one of the three eligibility criteria in any case, but can do so for a limited period of time. For example, if an individual breaks both legs and is in two casts for several weeks, becomes a wheelchair user for the duration, and the bus route that would normally take him to work is not accessible, the individual could be eligible under the second eligibility category. In granting eligibility to such a person, the entity should establish an expiration date for eligibility consistent with the expected end of the period disability.

TRIP-BY-TRIP ELIGIBILITY

A person may be ADA paratransit eligible for some trips but not others. Eligibility does not inhere in the individual or his or her disability, as such, but in meeting the functional criteria of inability to use the fixed route system established by the ADA. This inability is likely to change with differing circumstances.

For example, someone whose impairment-related condition is a severe sensitivity to temperatures below 20 degrees is not prevented from using fixed route transit when the temperature is 75 degrees. Someone whose impairment-related condition is an inability to maneuver a wheelchair through snow is not prevented from using fixed route transit when there is no snow on the ground. Someone with a cognitive disability may have learned to take the same bus route to a supported employment job every day. This individual is able to navigate the system for work purposes and therefore would not be eligible for paratransit for work trips. But the individual may be unable to get to other destinations on the bus system without getting lost, and would be eligible for paratransit for non-work trips. Someone who normally drives his own car to a rail system park and ride lot may have a specific impairment related condition preventing him from getting to the station when his car is in the shop. A person who can use accessible fixed route service can go to one destination on an accessible route; another destination would require the use of an inaccessible route. The individual would be eligible for the latter but not the former.

In many cases, though the person is eligible for some trips but not others, eligibility determinations would not have to be made literally on a trip-by-trip basis. It may often be possible to establish the conditions on eligibility as part of the initial eligibility determination process. Someone with a temperature sensitivity might be granted seasonal eligibility. Somebody who is able to navigate the system for work but not non-work trips could have this fact noted in his or her eligibility documentation. Likewise, someone with a variable condition (e.g., multiple sclerosis, HIV disease, need for kidney dialysis) could have their eligibility based on the underlying condition, with paratransit need for a particular trip dependent on self-assessment or a set of medical standards (e.g., trip within a certain amount of time after a dialysis session). On the other hand, persons in the second eligibility category (people who can use accessible fixed route service where it exists) would be given service on the basis of the particular route they would use for a given trip.

Because entities are not precluded from providing service beyond that required by the rule, an entity that believes it is too difficult to administer a program of trip-by-trip eligibility is not required to do so. Nothing prevents an entity from providing all requested trips to a person whom the ADA requires to receive service for only some trips. In this case, if the entity intends to request an undue financial burden waiver, the entity, as provided in the undue burden provisions of

this rule, must estimate, by a statistically valid technique, the percentage of its paratransit trips that are mandated by the ADA. Only that percentage of its total costs will be counted in considering the undue burden waiver request.

CATEGORY 1 ELIGIBILITY

The first eligibility category includes, among others, persons with mental or visual impairments who, as a result, cannot ''navigate the system.'' This eligibility category includes people who cannot board, ride, or disembark from an accessible vehicle ''without the assistance of another individual.'' This means that, if an individual needs an attendant to board, ride, or disembark from an accessible fixed route vehicles (including ''navigating the system''), the individual is eligible for paratransit. One implication of this language is that an individual does not lose paratransit eligibility based on ''inability to navigate the system'' because the individual chooses to travel with a friend on the paratransit system (even if the friend could help the person navigate the fixed route system). Eligibility in this category is based on ability to board, ride, and disembark independently.

Mobility training (e.g., of persons with mental or visual impairments) may help to improve the ability of persons to navigate the system or to get to a bus stop. Someone who is successfully mobility trained to use the fixed route system for all or some trips need not be provided paratransit service for those trips. The Department encourages entities to sponsor such training as a means of assisting individuals to use fixed route rather than paratransit.

CATEGORY 2 ELIGIBILITY

The second eligibility criterion is the broadest, with respect to persons with mobility impairments, but its impact should be reduced over time as transit systems become more accessible. This category applies to persons who could use accessible fixed route transportation, but accessible transportation is not being used at the time, and on the route, the persons would travel. This concept is route based, not system based.

Speaking first of bus systems, if a person is traveling from Point A to Point B on route 1, and route 1 is accessible, the person is not eligible for paratransit for the trip. This is true even though other portions of the system are still inaccessible. If the person is traveling from Point A to Point C on route 2, which is not accessible, the person is eligible for that trip. If the person is traveling from Point A to Point B on accessible route 1, with a transfer at B to go on inaccessible route 3 to Point D, then the person is eligible for the second leg of the trip. (The entity could choose to provide a paratransit trip from A to D or a paratransit or on-call bus trip from B to D.)

For purposes of this standard, we view a route as accessible when all buses scheduled on the route are accessible. Otherwise, it is unlikely that an accessible vehicle could be provided ''within a reasonable period of [a] time'' when the individual wants to travel, as the provision requires. We recognize that some systems' operations may not be organized in a way that permits determining whether a given route is accessible, even though a route-by-route determination appears to be contemplated by the statute. In such cases, it may be that category 2 eligibility would persist until the entire system was eligible.

With respect to a rail system, an individual is eligible under this standard if, on the route or line he or she wants to use, there is not yet one car per train accessible or if key stations are not yet accessible. This eligibility remains even if bus systems covering the area served by the rail system have become 100 percent accessible. This is necessary because people use rail systems for different kinds of trips than bus systems. It would often take much more in the way of time, trouble, and transfers for a person to go on the buses of one or more transit authorities than to have a direct trip provided by the rail operator. Since bus route systems are often designed to feed rail systems rather than duplicate them, it may often be true that ''you can't get there from here'' relying entirely on bus routes or the paratransit service area that parallels them.

If the lift on a vehicle cannot be deployed at a particular stop, an individual is eligible for paratransit under this category with respect to the service to the inaccessible stop. If on otherwise accessible route 1, an individual wants to travel from Point A to Point E, and the lift cannot be deployed at E, the individual is eligible for paratransit for the trip. (On-call bus would not work as a mode of providing this trip, since a bus lift will not deploy at the stop.) This is true even though service from Point A to all other points on the line is fully accessible. In this circumstance, the entity should probably think seriously about working with the local government involved to have the stop moved or made accessible.

When we say that a lift cannot be deployed, we mean literally that the mechanism will not work at the location to permit a wheelchair user or other person with a disability to disembark or that the lift will be damaged if it is used there. It is not consistent with the rule for a transit provider to declare a stop off-limits to someone who uses the lift while allowing other passengers to use the stop. However, if temporary conditions not under the operator's control (e.g., construction, an accident, a landslide) make it so hazardous for anyone to disembark that

the stop is temporarily out of service for all passengers may the operator refuse to allow a passenger to disembark using the lift.

CATEGORY 3 ELIGIBILITY

The third eligibility criterion concerns individuals who have a specific impairment-related condition which prevents them from getting to or from a stop or station. As noted in the legislative history of the ADA, this is intended to be a ''very narrow exception'' to the general rule that difficulty in traveling to or from boarding or disembarking locations is not a basis for eligibility.

What is a specific impairment-related condition? The legislative history mentions four examples: Chronic fatigue, blindness, a lack of cognitive ability to remember and follow directions, or a special sensitivity to temperature. Impaired mobility, severe communications disabilities (e.g., a combination of serious vision and hearing impairments), cardiopulmonary conditions, or various other serious health problems may have similar effects. The Department does not believe that it is appropriate, or even possible, to create an exhaustive list.

What the rule uses as an eligibility criterion is not just the existence of a specific impairment-related condition. To be a basis for eligibility, the condition must prevent the individual from traveling to a boarding location or from a disembarking location. The word ''prevent'' is very important. For anyone, going to a bus stop and waiting for a bus is more difficult and less comfortable than waiting for a vehicle at one's home. This is likely to be all the more true for an individual with a disability. But for many persons with disabilities, in many circumstances, getting to a bus stop is possible. If an impairment related condition only makes the job of accessing transit more difficult than it might otherwise be, but does not prevent the travel, then the person is not eligible.

For example, in many areas, there are not yet curb cuts. A wheelchair user can often get around this problem by taking a less direct route to a destination than an ambulatory person would take. That involves more time, trouble, and effort than for someone without a mobility impairment. But the person can still get to the bus stop. On the basis of these architectural barriers, the person would not be eligible.

Entities are cautioned that, particularly in cases involving lack of curb cuts and other architectural barrier problems, assertions of eligibility should be given tight scrutiny. Only if it is apparent from the facts of a particular case that an individual cannot find a reasonable alternative path to a location should eligibility be granted.

If we add a foot of snow to the scenario, then the same person taking the same route may be unable to get to the bus stop. It is not the snow alone that stops him; it is the interaction of the snow and the fact that the individual has a specific-impairment related condition that requires him to push a wheelchair through the snow that prevents the travel.

Inevitably, some judgment is required to distinguish between situations in which travel is prevented and situations in which it is merely made more difficult. In the Department's view, a case of ''prevented travel'' can be made not only where travel is literally impossible (e.g., someone cannot find the bus stop, someone cannot push a wheelchair through the foot of snow or up a steep hill) but also where the difficulties are so substantial that a reasonable person with the impairment-related condition in question would be deterred from making the trip.

The regulation makes the interaction between an impairment-related condition and the environmental barrier (whether distance, weather, terrain, or architectural barriers) the key to eligibility determinations. This is an individual determination. Depending on the specifics of their impairment-related condition, one individual may be able to get from his home to a bus stop under a given set of conditions, while his next-door neighbor may not.

COMPANIONS

The ADA requires entities to provide paratransit to one person accompanying the eligible individual, with others served on a space-available basis. The one individual who is guaranteed space on the vehicle can be anyone—family member, business associate, friend, date, etc. The provider cannot limit the eligible individual's choice of type of companion. The transit authority may require that the eligible individual reserve a space for the companion when the individual reserves his or her own ride. This one individual rides even if this means that there is less room for other eligible individuals. Additional individuals beyond the first companion are carried only on a space available basis; that is, they do not displace other ADA paratransit eligible individuals.

A personal care attendant (i.e., someone designated or employed specifically to help the eligible individual meet his or her personal needs) always may ride with the eligible individual. If there is a personal care attendant on the trip, the eligible individual may still bring a companion, plus additional companions on a space available basis. The entity may require that, in reserving the trip, the eligible individual reserve the space for the attendant.

To prevent potential abuse of this provision, the rule provides that a companion (e.g., friend or family member) does not count as a personal care attendant unless the eligible individual regularly makes use

of a personal care attendant and the companion is actually acting in that capacity. As noted under §37.125, a provider may require that, as part of the initial eligibility certification process, an individual indicate whether he or she travels with a personal care attendant. If someone does not indicate the use of an attendant, then any individual accompanying him or her would be regarded simply as a companion.

To be viewed as ''accompanying'' the eligible individual, a companion must have the same origin and destination points as the eligible individual. In appropriate circumstances, entities may also wish to provide service to a companion who has either an origin or destination, but not both, with the eligible individual (e.g., the individual's date is dropped off at her own residence on the return trip from a concert).

Section 37.125 ADA Paratransit Eligibility—Process

This section requires an eligibilty process to be established by each operator of complementary paratransit. The details of the process are to be devised through the planning and public participation process of this subpart. The process may not impose unreasonable administrative burdens on applicants, and, since it is part of the entity's nondiscrimination obligations, may not involve ''user fees'' or application fees to the applicant.

The process may include functional criteria related to the substantive eligibility criteria of §37.123 and, where appropriate, functional evaluation or testing of applicants. The substantive eligibility process is not aimed at making a medical or diagnostic determination. While evaluation by a physician (or professionals in rehabilitation or other relevant fields) may be used as part of the process, a diagnosis of a disability is not dispositive. What is needed is a determination of whether, as a practical matter, the individual can use fixed route transit in his or her own circumstances. That is a transportation decision primarily, not a medical decision.

The goal of the process is to ensure that only people who meet the regulatory criteria, strictly applied, are regarded as ADA paratransit eligible. The Department recognizes that transit entities may wish to provide service to other persons, which is not prohibited by this rule. However, the eligibility process should clearly distinguish those persons who are ADA eligible from those who are provided service on other grounds. For example, eligibility documentation must clearly state whether someone is ADA paratransit eligible or eligible on some other basis.

Often, people tend to think of paratransit exclusively in terms of people with mobility impairments. Under the ADA, this is not accurate. Persons with visual impairments may be eligible under either the first or third eligibility categories. To accommodate them, all documents concerning eligibility must be made available in one or more accessible formats, on request. Accessible formats include computer disks, braille documents, audio cassettes, and large print documents. A document does not necessarily need to be made available in the format a requester prefers, but it does have to be made available in a format the person can use. There is no use giving a computer disk to someone who does not have a computer, for instance, or a braille document to a person who does not read braille.

When a person applies for eligibility, the entity will provide all the needed forms and instructions. These forms and instructions may include a declaration of whether the individual travels with a personal care attendant. The entity may make further inquiries concerning such a declaration (e.g., with respect to the individual's actual need for a personal care attendant).

When the application process is complete—all necessary actions by the applicant taken—the entity should process the application in 21 days. If it is unable to do so, it must begin to provide service to the applicant on the 22nd day, as if the application had been granted. Service may be terminated only if and when the entity denies the application. All determinations shall be in writing; in the case of a denial, reasons must be specified. The reasons must specifically relate the evidence in the matter to the eligibility criteria of this rule and of the entity's process. A mere recital that the applicant can use fixed route transit is not sufficient.

For people granted eligibility, the documentation of eligibility shall include at least the following information:

—The individual's name
—The name of the transit provider
—The telephone number of the entity's paratransit coordinator
—An expiration date for eligibility
—Any conditions or limitations on the individual's eligibility, including the use of a personal care attendant.

The last point refers to the situation in which a person is eligible for some trips but not others. Or if the traveler is authorized to have a personal care attendant ride free of charge. For example, the documentation may say that the individual is eligible only when the temperature falls below a certain point, or when the individual is going to a destination not on an accessible bus route, or for non-work trips, etc.

As the mention of an expiration date implies, certification is not forever. The entity

may recertify eligibility at reasonable intervals to make sure that changed circumstances have not invalidated or changed the individual's eligibility. In the Department's view, a reasonable interval for recertification is probably between one and three years. Less than one year would probably be too burdensome for consumers; over three years would begin to lose the point of doing recertifications. The recertification interval should be stated in the entity's plan. Of course, a user of the service can apply to modify conditions on his or her eligibility at any time.

The administrative appeal process is intended to give applicants who have been denied eligibility the opportunity to have their cases heard by some official other than the one who turned them down in the first place. In order to have appropriate separation of functions—a key element of administrative due process—not only must the same person not decide the case on appeal, but that person, to the extent practicable, should not have been involved in the first decision (e.g., as a member of the same office, or a supervisor or subordinate of the original decisionmaker). When, as in the case of a small transit operator, this degree of separation is not feasible, the second decisionmaker should at least be ''bubbled'' with respect to the original decision (i.e., not have participated in the original decision or discussed it with the original decisionmaker). In addition, there must be an opportunity to be heard in person as well as the chance to present written evidence and arguments. All appeals decisions must be in writing, stating the reasons for the decision.

To prevent the filing of stale claims, the entity may establish a 60 day ''statute of limitations'' on filing of appeals, the time starting to run on the date the individual is notified on the negative initial decision. After the appeals process has been completed (i.e., the hearing and/or written submission completed), the entity should make a decision within 30 days. If it does not, the individual must be provided service beginning the 31st day, until and unless an adverse decision is rendered on his or her appeal.

Under the eligibility criteria of the rule, an individual has a right to paratransit if he or she meets the eligibility criteria. As noted in the discussion of the nondiscrimination section, an entity may refuse service to anindividual with a disability who engages in violent, seriously disruptive, or illegal conduct, using the same standards for exclusion that would apply to any other person who acted in such an inappropriate way.

The rule also allows an entity to establish a process to suspend, for a reasonable period of time, the provision of paratransit service to an ADA eligible person who establishes a pattern or practice of missing scheduled trips. The purpose of this process would be to deter or deal with chronic ''no-shows.'' The sanction system—articulated criteria for the imposition of sanctions, length of suspension periods, details of the administrative process, etc.—would be developed through the public planning and participation process for the entity's paratransit plan, and the result reflected in the plan submission to FTA.

It is very important to note that sanctions could be imposed only for a ''pattern or practice'' of missed trips. A pattern or practice involves intentional, repeated or regular actions, not isolated, accidental, or singular incidents. Moreover, only actions within the control of the individual count as part of a pattern or practice. Missed trips due to operator error are not attributable to the individual passenger for this purpose. If the vehicle arrives substantially after the scheduled pickup time, and the passenger has given up on the vehicle and taken a taxi or gone down the street to talk to a neighbor, that is not a missed trip attributable to the passenger. If the vehicle does not arrive at all, or is sent to the wrong address, or to the wrong entrance to a building, that is not a missed trip attributable to the passenger. There may be other circumstances beyond the individual's control (e.g., a sudden turn for the worse in someone with a variable condition, a sudden family emergency) that make it impracticable for the individual to travel at the scheduled time and also for the individual to notify the entity in time to cancel the trip before the vehicle comes. Such circumstances also would not form part of a sanctionable pattern or practice.

Once an entity has certified someone as eligible, the individual's eligibility takes on the coloration of a property right. (This is not merely a theoretical statement. If one depends on transportation one has been found eligible for to get to a job, and the eligibility is removed, one may lose the job. The same can be said for access to medical care or other important services.) Consequently, before eligibility may be removed ''for cause'' under this provision, the entity must provide administrative due process to the individual.

If the entity proposes to impose sanctions on someone, it must first notify the individual in writing (using accessible formats where necessary). The notice must specify the basis of the proposed action (e.g., Mr. Smith scheduled trips for 8 a.m. on May 15, 2 p.m. on June 3, 9 a.m. on June 21, and 9:20 p.m. on July 10, and on each occasion the vehicle appeared at the scheduled time and Mr. Smith was nowhere to be found) and set forth the proposed sanction (e.g., Mr. Smith would not receive service for 15 days).

The entity would provide the individual an opportunity to be heard (i.e., an in-person informal hearing before a decisionmaker) as well as to present written and oral information and arguments. All relevant entity

records and personnel would be made available to the individual, and other persons could testify. It is likely that, in many cases, an important factual issue would be whether a missed trip was the responsibility of the provider or the passenger, and the testimony of other persons and the provider's records or personnel are likely to be relevant in deciding this issue. While the hearing is intended to be informal, the individual could bring a representative (e.g., someone from an advocacy organization, an attorney).

The individual may waive the hearing and proceed on the basis of written presentations. If the individual does not respond to the notice within a reasonable time, the entity may make, in effect, a default finding and impose sanctions. If there is a hearing, and the individual needs paratransit service to attend the hearing, the entity must provide it. We would emphasize that, prior to a finding against the individual after this due process procedure, the individual must continue to receive service. The entity cannot suspend service while the matter is pending.

The entity must notify the individual in writing about the decision, the reasons for it, and the sanctions imposed, if any. Again, this information would be made available in accessible formats. In the case of a decision adverse to the individual, the administrative appeals process of this section would apply. The sanction would be stayed pending an appeal.

There are means other than sanctions, however, by which a transit provider can deal with a ''no-show'' problem in its system. Providers who use ''real time scheduling'' report that this technique is very effective in reducing no-shows and cancellations, and increasing the mix of real time scheduling in a system can probably be of benefit in this area. Calling the customer to reconfirm a reasonable time before pickup can head off some problems, as can educating consumers to call with cancellations ahead of time. Training of dispatch and operator personnel can help to avoid miscommunications that lead to missed trips.

Section 37.127 Complementary Paratransit for Visitors

This section requires each entity having a complementary paratransit system to provide service to visitors from out of town on the same basis as it is provided to local residents. By ''on the same basis,'' we mean under all the same conditions, service criteria, etc., without distinction. For the period of a visit, the visitor is treated exactly like an eligible local user, without any higher priority being given to either.

A visitor is defined as someone who does not reside in the jurisdiction or jurisdictions served by the public entity or other public entities with which it coordinates paratransit service. For example, suppose a five-county metropolitan area provides coordinated paratransit service under a joint plan. A resident of any of the five counties would not be regarded as a visitor in any of them. Note that the rule talks in terms of ''jurisdiction'' rather than ''service area.'' If an individual lives in XYZ County, but outside the fixed route service area of that county's transit provider, the individual is still not a visitor for purposes of paratransit in PQR County, if PQR is one of the counties with which XYZ provides coordinated paratransit service.

A visitor can become eligible in one of two ways. The first is to present documentation from his or her ''home'' jurisdiction's paratransit system. The local provider will give ''full faith and credit'' to the ID card or other documentation from the other entity. If the individual has no such documentation, the local provider may require the provision of proof of visitor status (i.e., proof of residence somewhere else) and, if the individual's disability is not apparent, proof of the disability (e.g., a letter from a doctor or rehabilitation professional). Once this documentation is presented and is satisfactory, the local provider will make service available on the basis of the individual's statement that he or she is unable to use the fixed route transit system.

The local provider need serve someone based on visitor eligibility for no more than 21 days. After that, the individual is treated the same as a local person for eligibility purposes. This is true whether the 21 days are consecutive or parceled out over several shorter visits. The local provider may require the erstwhile visitor to apply for eligibility in the usual local manner. A visitor who expects to be around longer than 21 days should apply for regular eligibility as soon as he arrives. The same approach may be used for a service of requested visits totaling 21 days or more in a relating compact period of time. Preferably, this application process should be arranged before the visitor arrives, by letter, telephone or fax, so that a complete application can be processed expeditiously.

Section 37.129 Types of Service

The basic mode of service for complementary paratransit is demand responsive, origin-to-destination service. This service may be provided for persons in any one of the three eligibility categories, and must always be provided to persons in the first category (e.g., people who cannot navigate the system). The local planning process should decide whether, or in what circumstances, this service is to be provided as door-to-door or curb-to-curb service.

For persons in the second eligibility category (e.g., persons who can use accessible buses, but do not have an accessible bus

route available to take them to their destination), origin-to-destination service can be used. Alternatively, the entity can provide either of two other forms of service. One is on-call bus, in which the individual calls the provider and arranges for one or more accessible buses to arrive on the routes he needs to use at the appropriate time. On-call bus service must meet all the service criteria of §37.131, except that on-call buses run only on fixed routes and the fare charged can be only the fixed route fare that anyone pays on the bus (including discounts).

The second option is ''feeder paratransit'' to an accessible fixed route that will take the individual to his or her destination. Feeder paratransit, again, would have to meet all the criteria of §37.131. With respect to fares, the paratransit fare could be charged, but the individual would not be double charged for the trip. That is, having paid the paratransit fare, the transfer to the fixed route would be free.

For persons in the third eligibility category (e.g., persons who can use fixed route transit but who, because of a specific impairment-related condition, cannot get to or from a stop), the ''feeder paratransit'' option, under the conditions outlined above, is available. For some trips, it might be necessary to arrange for feeder service at both ends of the fixed route trip. Given the more complicated logistics of such arrangements, and the potential for a mistake that would seriously inconvenience the passenger, the transit provider should consider carefully whether such a ''double feeder'' system, while permissible, is truly workable in its system (as opposed to a simpler system that used feeder service only at one end of a trip when the bus let the person off at a place from which he or she could independently get to the destination). There may be some situations in which origin to destination service is easier and less expensive.

Section 37.131 Service Criteria for Complementary Paratransit Service Area

The basic bus system service area is a corridor with a width of ¾ of a mile on each side of each fixed route. At the end of a route, there is a semicircular ''cap'' on the corridor, consisting of a three-quarter mile radius from the end point of the route to the parallel sides of the corridor.

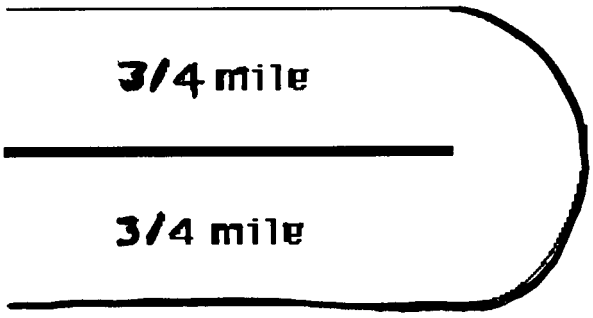

Complementary paratransit must provide service to any origin or destination point within a corridor fitting this description around any route in the bus system. Note that this does not say that an eligible user must live within a corridor in order to be eligible. If an individual lives outside the corridor, and can find a way of getting to a pickup point within the corridor, the service must pick him up there. The same holds true at the destination end of the trip.

Another concept involved in this service criterion is the core service area. Imagine a bus route map of a typical city. Color the bus routes and their corridors blue, against the white outline map. In the densely populated areas of the city, the routes (which, with their corridors attached, cut 1½ mile swaths) merge together into a solid blue mass. There are few, if any, white spots left uncovered, and they are likely to be very small. Paratransit would serve all origins and destinations in the solid blue mass.

But what of the little white spots surrounded by various bus corridors? Because it would make sense to avoid providing service to such small isolated areas, the rule requires paratransit service there as well. So color them in too.

Outside the core area, though, as bus routes follow radial arteries into the suburbs and exurbs (we know real bus route maps are more complicated than this, but we simplify for purposes of illustration), there are increasingly wide white areas between the blue

corridors, which may have corridors on either side of them but are not small areas completely surrounded by corridors. These white spaces are not part of the paratransit service area and the entity does not have to serve origins and destinations there. However, if, through the planning process, the entity wants to enlarge the width of one or more of the blue corridors from the ¾ of a mile width, it can do so, to a maximum of 1½ miles on each side of a route. The cost of service provided within such an expanded corridor can be counted in connection with an undue financial burden waiver request.

There may be a part of the service area where part of one of the corridors overlaps a political boundary, resulting in a requirement to serve origins and destinations in a neighboring jurisdiction which the entity lacks legal authority to service. The entity is not required to serve such origins and destinations, even though the area on the other side of the political boundary is within a corridor. This exception to the service area criterion d when there is a legal bar to the entity providing service on the other side of the boundary.

The rule requires, in this situation, that the entity take all practicable steps to get around the problem so that it can provide service throughout its service area. The entity should work with the state or local governments involved, via coordination plans, reciprocity agreements, memoranda of understanding or other means to prevent political boundaries from becoming barriers to the travel of individuals with disabilities.

The definition of the service area for rail systems is somewhat different, though many of the same concepts apply.

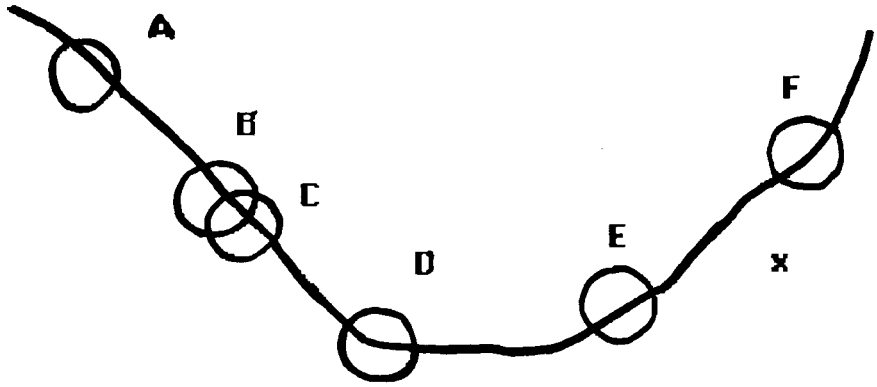

Circle radius = 3/4 mile

Around each station on the line (whether or not a key station), the entity would draw a circle with a radius of ¾ mile. Some circles may touch or overlap. The series of circles is the rail system's service area. (We recognize that, in systems where stations are close together, this could result in a service area that approached being a corridor like that of a bus line.) The rail system would provide paratransit service from any point in one circle to any point in any other circle. The entity would not have to provide service to two points within the same circle, since a trip between two points in the vicinity of the same station is not a trip that typically would be taken by train. Nor would the entity have to provide service to spaces between the circles. For example, a train trip would not get close to point x; one would have to take a bus or other mode of transportation to get from station E or F to point x. A paratransit system comparable to the rail service area would not be required to take someone there either.

Rail systems typically provide trips that are not made, or cannot be made conveniently, on bus systems. For example, many rail systems cross jurisdictional boundaries that bus systems often do not. One can travel from Station A to a relatively distant Station E on a rail system in a single trip, while a bus trip between the same points, if possible at all, may involve a number of indirect routings and transfers, on two bus systems that may not interface especially well.

Rail operators have an obligation to provide paratransit equivalents of trips between circles to persons who cannot use fixed route rail systems because they cannot navigate the system, because key stations or trains are not yet accessible, or because they cannot access stations from points within the circles because of a specific impairment-related condition. For individuals who are eligible in category 2 because they need an accessible key station to use the system, the paratransit obligation extends only to transportation among ''circles'' centered on designated key stations (since, even when the key station plan is fully implemented, these individuals will be unable to use non-key stations).

It is not sufficient for a rail operator to refer persons with disabilities to an accessible bus system in the area. The obligation to provide paratransit for a rail system is independent of the operations of any bus system serving the same area, whether operated by the same entity that operates the rail system or a different entity. Obviously, it will be advantageous for bus and rail systems to coordinate their paratransit efforts, but a coordinated system would have to ensure coverage of trips comparable to rail trips that could not conveniently be taken on the fixed route bus system.

RESPONSE TIME

Under this provision, an entity must make its reservation service available during the hours its administrative offices are open. If those offices are open 9 to 5, those are the hours during which the reservations service must be open, even if the entity's transit service operated 6 a.m. to midnight. On days prior to a service day on which the administrative offices are not open at all (e.g., a Sunday prior to a Monday service day), the reservation service would also be open 9 to 5. Note that the reservation service on any day does not have to be provided directly by a ''real person.'' An answering machine or other technology can suffice.

Any caller reaching the reservation service during the 9 to 5 period, in this example, could reserve service for any time during the next 6 a.m. to 12 midnight service day. This is the difference between ''next day scheduling'' and a system involving a 24-hour prior reservation requirement, in which a caller would have to reserve a trip at 7 a.m. today if he or she wanted to travel at 7 a.m. tomorrow. The latter approach is not adequate under this rule.

The entity may use real time scheduling for all or part of its service. Like the Moliere character who spoke prose all his life without knowing it, many entities may already be using some real time scheduling (e.g., for return trips which are scheduled on a when-needed basis, as opposed to in advance). A number of transit providers who have used real time scheduling believe that it is more efficient on a per-trip basis and reduces cancellations and no-shows significantly. We encourage entities to consider this form of service.

Sometimes users want to schedule service well in advance, to be sure of traveling when they want to. The rule tells providers to permit reservations to be made as much as 14 days in advance. In addition, though an entity may negotiate with a user to adjust pick-up and return trip times to make scheduling more efficient, the entity cannot insist on scheduling a trip more than one hour earlier or later than the individual desires to travel. Any greater deviation from desired trip would exceed the bounds of comparability.

FARES

To calculate the proper paratransit fare, the entity would determine the route(s) that an individual would take to get from his or her origin to his or her destination on the fixed route system. At the time of day the person was traveling, what is the fare for that trip on those routes? Applicable charges like transfer fees or premium service charges may be added to the amount, but discounts (e.g., the half-fare discount for off-peak fixed route travel by elderly and handicapped persons) would not be subtracted. The transit provider could charge up to twice the resulting amount for the paratransit trip.

The mode through which paratransit is provided does not change the method of calculation. For example, if paratransit is provided via user side subsidy taxi service rather than publicly operated dial-a-ride van service, the cost to the user could still be only twice the applicable fixed route fare. The system operates the same regardless of whether the paratransit trip is being provided in place of a bus or a rail trip the user cannot make on the fixed route system. Where bus and rail systems are run by the same provider (or where the same bus provider runs parallel local and express buses along the same route), the comparison would be made to the mode on which a typical fixed route user would make the particular trip, based on schedule, length, convenience, avoidance of transfers, etc.

Companions are charged the same fare as the eligible individual they are accompanying. Personal care attendants ride free.

One exception to the fare requirement is made for social service agency (or other organization-sponsored) trips. This exception, which allows the transit provider to negotiate a price with the agency that is more than twice the relevant fixed route fare, applies to ''agency trips,'' by which we mean trips which are guaranteed to the agency for its use. That is, if an agency wants 12 slots for a trip to the mall on Saturday for clients with disabilities, the agency makes the reservation for the trips in its name, the agency

will be paying for the transportation, and the trips are reserved to the agency, for whichever 12 people the agency designates, the provider may then negotiate any price it can with the agency for the trips. We distinguish this situation from one in which an agency employee, as a service, calls and makes an individual reservation in the name of a client, where the client will be paying for the transportation.

RESTRICTIONS AND PRIORITIES BASED ON TRIP PURPOSE

This is a simple and straightforward requirement. There can be no restrictions or priorities based on trip purpose in a comparable complementary paratransit system. When a user reserves a trip, the entity will need to know the origin, destination, time of travel, and how many people are traveling. The entity does not need to know why the person is traveling, and should not even ask.

HOURS AND DAYS OF SERVICE

This criterion says simply that if a person can travel to a given destination using a given fixed route at a given time of day, an ADA paratransit eligible person must be able to travel to that same destination on paratransit at that time of day. This criterion recognizes that the shape of the service area can change. Late at night, for example, it is common for certain routes not to be run. Those routes, and their paratransit corridors, do not need to be served with paratransit when the fixed route system is not running on them. One couldn't get to destinations in that corridor by fixed route at those times, so paratransit service is not necessary either.

It should be pointed out that service during low-demand times need not be by the same paratransit mode as during higher usage periods. For example, if a provider uses its own paratransit vans during high demand periods, it could use a private contractor or user-side subsidy provider during low demand periods. This would presumably be a more efficient way of providing late night service. A call-forwarding device for communication with the auxiliary carrier during these low demand times would be perfectly acceptable, and could reduce administrative costs.

CAPACITY CONSTRAINTS

This provision specifically prohibits two common mechanisms that limit use of a paratransit system so as to constrain demand on its capacity. The first is a waiting list. Tyically, a waiting list involves a determination by a provider that it can provide service only to a given number of eligible persons. Other eligible persons are not able to receive service until one of the people being served moves away or otherwise no longer uses the service. Then the persons on the waiting list can move up. The process is analogous to the wait that persons in some cities have to endure to be able to buy season tickets to a sold-out slate of professional football games.

The second mechanism specifically mentioned is a number limit on the trips a passenger can take in a given period of time. It is a kind of rationing in which, for example, if one has taken his quota of 30 trips this month, he cannot take further trips for the rest of the month.

In addition, this paragraph prohibits any operational pattern or practice that significantly limits the availability of service of ADA paratransit eligible persons. As discussed under §37.125 in the context of missed trips by passengers, a ''pattern or practice'' involves, regular, or repeated actions, not isolated, accidental, or singular incidents. A missed trip, late arrival, or trip denial now and then does not trigger this provision.

Operational problems outside the control of the entity do not count as part of a pattern or practice under this provision. For example, if the vehicle has an accident on the way to pick up a passenger, the late arrival would not count as part of a pattern or practice. If something that could not have been anticipated at the time the trip was scheduled (e.g., a snowstorm, an accident or hazardous materials incident that traps the paratransit vehicle, like all traffic on a certain highway, for hours), the resulting missed trip would not count as part of a pattern or practice. On the other hand, if the entity regularly does not maintain its vehicles well, such that frequent mechanical breakdowns result in missed trips or late arrivals, a pattern or practice may exist. This is also true in a situation in which scheduling practices fail to take into account regularly occurring traffic conditions (e.g., rush hour traffic jams), resulting in frequent late arrivals.

The rule mentions three specific examples of operational patterns or practices that would violate this provision. The first is a pattern or practice of substantial numbers of significantly untimely pickups (either for initial or return trips). To violate this provision, there must be both a substantial number of late arrivals and the late arrivals in question must be significant in length. For example, a DOT Inspector General's (IG) report on one city's paratransit system disclosed that around 30 percent of trips were between one and five hours late. Such a situation would trigger this provision. On the other hand, only a few instances of trips one to five hours late, or many instances of trips a few minutes late, would not trigger this provision.

The second example is substantial numbers of trip denials or missed trips. For example, if on a regular basis the reservation phone

lines open at 5 a.m. and callers after 7 a.m. are all told that they cannot travel, or the phone lines shut down after 7 a.m. and a recorded message says to call back the next day, or the phone lines are always so busy that no one can get through, this provision would be triggered. (Practices of this kind would probably violate the response time criterion as well.) Also, if, on a regular basis, the entity misses a substantial number of trips (e.g., a trip is scheduled, the passenger is waiting, but the vehicle never comes, goes to the wrong address, is extremely late, etc.), it would violate this provision.

The third example is substantial numbers of trips with excessive trip lengths. Since paratransit is a shared ride service, paratransit rides between Point A and Point B will usually take longer, and involve more intermediate stops, than a taxi ride between the same two points. However, when the number of intermediate stops and the total trip time for a given passenger grows so large as to make use of the system prohibitively inconvenient, then this provision would be triggered. For example, the IG report referred to above mentioned a situation in which 9 percent of riders had one way trips averaging between two and four hours, with an average of 16 intermediate stops. Such a situation would probably trigger this provision.

Though these three examples probably cover the most frequently cited problems in paratransit operations that directly or indirectly limit the provision of service that is theoretically available to eligible persons, the list is not exhaustive. Other patterns or practices could trigger this provision. For example, the Department has heard about a situation in which an entity's paratransit contractor was paid on a per-trip basis, regardless of the length of the trip. The contractor therefore had an economic incentive to provide as many trips as possible. As a result, the contractor accepted short trips and routinely denied longer trips. This would be a pattern or practice contrary to this provision (and contrary to the service area provision as well).

ADDITIONAL SERVICE

This provision emphasizes that entities may go beyond the requirements of this section in providing service to ADA paratransit individuals. For example, no one is precluded from offering service in a larger service area, during greater hours than the fixed route system, or without charge. However, costs of such additional service do not count with respect to undue financial burden waiver requests. Where a service criterion itself incorporates a range of actions the entity may take (e.g., providing wide corridors outside the urban core, using real time scheduling), however, costs of providing that optional service may be counted for undue financial burden waiver request purposes.

Section 37.133 Subscription Service

As part of its paratransit service, an entity may include a subscription service component. However, at any given time of day, this component may not absorb more than 50 percent of available capacity on the total system. For example, if, at 8 a.m., the system can provide 400 trips, no more than 200 of these can be subscription trips.

The one exception to this rule would occur in a situation in which there is excess non-subscription capacity available. For example, if over a long enough period of time to establish a pattern, there were only 150 non-subscription trips requested at 8 a.m., the provider could begin to provide 250 subscription trips at that time. Subsequently, if non-subscription demand increased over a period of time, such that the 50 trips were needed to satisfy a regular non-subscription demand at that time, and overall system capacity had not increased, the 50 trips would have to be returned to the non-subscription category. During times of high subscription demand, entities could use the trip time negotiation discretion of §37.131(c)(2) to shift some trips to other times.

Because subscription service is a limited subcomponent of paratransit service, the rule permits restrictions to be imposed on its use that could not be imposed elsewhere. There may be a waiting list for provision of subscription service or the use of other capacity constraints. Also, there may be restrictions or priorities based on trip purpose. For example, subscription service under peak work trip times could be limited to work trips. We emphasize that these limitations apply only to subscription service. It is acceptable for a provider to put a person on a waiting list for access to subscription service at 8 a.m. for work trips; the same person could not be wait-listed for access to paratransit service in general.

Section 37.135 Submission of Paratransit Plans

This section contains the general requirements concerning the submission of paratransit plans. Each public entity operating fixed route service is required to develop and submit a plan for paratransit service. Where you send your plans depends on the type of entity you are. There are two categories of entities which should submit their plans to states—(1) FTA recipients and (2) entities who are administered by the state on behalf of FTA.

These FTA grantees submit their plans to the states because the agency would like the benefit of the states' expertise before final review. The states' role is as a commenter, not as a reviewer.

This section also specifies annual progress reports concerning the meeting of previously approved milestones, any slippage (with the reasons for it and plans to catch up), and any significant changes in the operator's environment, such as the withdrawal from the marketplace of a private paratransit provider or whose service the entity has relied upon to provide part of its paratransit service.

Paragraph (d) of this section specifies a maximum time period for the phase-in of the implementation of paratransit plans. The Department recognizes that it is not reasonable to expect paratransit systems to spring into existence fully formed, like Athena from the head of Zeus. Under this paragraph, all entities must be in full compliance with all paratransit provisions by January 26, 1997, unless the entity has received a waiver from FTA based on undue financial burden (which applies only to the service criteria of §37.131, not to eligibility requirements or other paratransit provisions).

While the rule assumes that most entities will take a year to fully implement these provisions, longer than a year requires the paratransit plans to submit milestones that are susceptible to objective verification. Not all plans will be approved with a five-year lead-in period. Consistent with the proposed rule, the Department intends to look at each plan individually to see what is required for implementation in each case. DOT may approve only a shorter phase-in period in a given case.

Section 37.137 Paratransit Plan Development

Section 35.137 establishes three principal requirements in the development of paratransit plans.

First is the requirement to survey existing paratransit services within the service area. This is required by section 223(c)(8) of the ADA. While the ADA falls short of explicitly requiring coordination, clearly this is one of the goals. The purpose of the survey is to determine what is being provided already, so that a transit provider can accurately assess what additional service is needed to meet the service criteria for comparable paratransit service. The plan does not have to discuss private paratransit providers whose services will not be used to help meet paratransit requirements under this rule. However, the public entity will need to know specifically what services are being provided by whom if the entity is to count the transportation toward the overall need.

Since the public entity is required to provide paratransit to all ADA paratransit eligible individuals, there is some concern that currently provided service may be cut back or eliminated. It is possible that this may happen and such action would have a negative effect on transportation provided to persons with disabilities in general. The Department urges each entity required to submit a plan to work with current providers of transportation, not only to determine what transportation services they provide, but also to continue to provide service into the foreseeable future.

Second, §37.137 specifies requirements for public participation. First, the entity must perform outreach, to ensure that a wide range of persons anticipated to use the paratransit service know about and have the opportunity to participate in the development of the plan. Not only must the entity identify who these individuals or groups are, the entity also must contact the people at an early stage in the development process.

The other public participation requirements are straightforward. There must be a public hearing and an opportunity to comment. The hearing must be accessible to those with disabilities, and notice of the hearing must be accessible as well. There is a special efforts test identified in this paragraph for comments concerning a multi-year phase-in of a paratransit plan.

The final general requirement of the section specifies that efforts at public participation must be made permanent through some mechanism that provides for participation in all phases of paratransit plan development and submission. The Department is not requiring that there be an advisory committee established, although this is one method of institutionalizing participation. The Department is not as interested in the specific structure used to ensure public participation as we are interested in the effectiveness of the effort.

The Department believes that public participation is a key element in the effective implementation of the ADA. The ADA is an opportunity to develop programs that will ensure the integration of all persons into not just the transportation system of America, but all of the opportunities transportation makes possible. This opportunity is not without tremendous challenges to the transit providers. It is only through dialogue, over the long term, that usable, possible plans can be developed and implemented.

Section 37.139 Plan Contents

This section contains substantive categories of information to be contained in the paratransit plan: Information on current and changing fixed route service; inventory of existing paratransit service; discussion of the discrepancies between existing paratransit and what is required under this regulation; a discussion of the public participation requirements and how they have been met; the plan for paratransit service; the budget for paratransit services; efforts to coordinate with other transportation providers; a description of the process in place

or to be used to register ADA paratransit eligible individuals; a description of the documentation provided to each individual verifying eligibility; and a request for a waiver based on undue financial burden, if applicable. The final rule contains a reorganized and slightly expanded section on plan contents, reflecting requests to be more explicit, rather than less explicit.

The list of required elements is the same for all entities required to submit paratransit plans. There is no document length requirement, however. Each entity (or group plan) is unique and we expect the plans to reflect this. While we would like the plan elements presented in the order listed in this section, the contents most likely will vary greatly, depending on the size, geographic area, budget, complexity of issues, etc. of the particular submitting agency.

This section and §37.139 provide for a maximum phase-in period of five years, with an assumed one-year phase-in for all paratransit programs. (The required budget has been changed to five years as well.) The Department has established a maximum five-year phase-in in the belief that not all systems will require that long, but that some, particularly those which had chosen to meet compliance with section 504 requirements with accessible fixed route service, may indeed need five years.

We are confident that, through the public participation process, entities can develop a realistic plan for full compliance with the ADA. To help ensure this, the paratransit plan contents section now requires that any plan which projects full compliance after January 26, 1993 must include milestones which can be measured and which result in steady progress toward full compliance. For example, it is possible that the first part of year one is used to ensure comprehensive registration of all eligible persons with disabilities, training of transit provider staffs and the development and dissemination of information to users and potential users in accessible formats and some modest increase in paratransit service is provided. A plan would not be permitted to indicate that no activity was possible in the first year, but proportionately more progress could be planned for later years than for the first year. Implementation must begin in January 1992.

Each plan, including its proposed phase-in period, will be the subject of examination by FTA. Not all providers who request a five-year phase-in will receive approval for a five-year phase-in. The plan must be careful, therefore, to explain what current services are, what the projections are, and what methods are in place to determine and provide accountability for progress toward full compliance.

We have been asked for assistance in assessing what the demand for paratransit service will be. FTA's ADA Paratransit Manual provides detailed assistance in this and many other areas of the plan development process.

The ADA itself contained a figure of 43 million persons with disabilities. It should be pointed out that many of these may not necessarily be eligible for ADA paratransit service. The Department's regulatory impact analysis discussing the probable costs involved in implementing this rule places the possible percentage of population who would be eligible for paratransit service at between 1.4 and 1.9 percent. This figure can vary depending on the type and variety of services you have available, or on such things as climate, proximity to medical care, family, etc. that a person with a disability may need. Clearly estimating demand is one of the most critical elements in the plan, since it will be used to make decisions about all of the various service criteria.

Section 37.139 contains a new paragraph (j), spelling out in more detail requirements related to the annual submission of plans. Since there is now the possibility for five-year phase-ins, the annual plan demonstrates the progress made to date, and explains any delays.

Section 37.141 Requirements If a Joint Plan is Submitted

The Department believes that, particularly in large, multi-provider regions, a coordinated regional paratransit plan and system are extremely important. Such coordination can do much to ensure that the most comprehensive transportation can be provided with the most efficient use of available resources. We recognize that the effort of putting together such a coordinated system can be a lengthy one. This section is intended to facilitate the process of forming such a coordinated system.

If a number of entities wish to submit a joint plan for a coordinated system, they must, like other entities, submit a document by January 26, 1992. At a minimum, this document must include the following:

(1) A general statement that the participating entities intend to file a joint coordinated plan;

(2) A certification from each participating entity that it is committed to providing paratransit as a part of a coordinated plan;

(3) A certification from each participating entity that it will maintain at least current levels of paratransit service until the coordinated paratransit service called for by the joint plan is implemented;

(4) As many elements of the plan as possible.

These provisions ensure that significant planning will precede, and plan implementation will begin by, January 26, 1992, without precluding entities from cooperating because it was not possible to complete coordinating

different public entities by that date. The entities involved in a joint plan are required to submit all elements of their plan by July 26, 1992.

The final provision in the section notes that an entity may later join a coordinated plan, even if it has filed its own plan on January 26, 1992. An entity must submit its own plan by January 26, 1992, if it has not provided a certification of participation in a joint plan.). In this case, the entity must provide the assurances and certifications required of all of the other participating entities.

The Department fully expects that many jurisdictions filing joint plans will be able to do so by January 26, 1992. For those who cannot, the regulatory provision ensures that there will be no decrease in paratransit service. Further, since we anticipate coordinated service areas to provide more effective service, complete implementation of a joint plan could be more rapid than if each entity was providing service on its own.

Entities submitting a joint plan do not have any longer than any other entities to fully implement complementary paratransit service. In any case, all plans (joint or single) must be fully implemented by January 26, 1997, absent a waiver for undue financial burden (which would, in the case of a joint plan, be considered on a joint basis).

Section 37.143 Paratransit Plan Implementation

As already discussed under §37.135, the states will receive FTA recipient plans for section 18 recipients administered by the State or any small urbanized area recipient of section 9 funds administered by a state. Public entities who do not receive FTA funds will submit their plans directly to the applicable Regional Office (listed in appendix B to the rule).

The role of the state is to accept the plans on behalf of FTA, to ensure that all plans are submitted to it and forward the plans, with any comments on the plans, to FTA. This comment is very important for FTA to receive, since states administer these programs on behalf of FTA. Each state's specific knowledge of FTA grantees it administers will provide helpful information to FTA in making its decisions.

The rule lists five questions the states must answer when they forward the plans. These questions are gauged to capitalize on the working knowledge the states possess on the grantees. FTA will send a more specific letter of instruction to each state explaining its role.

Section 37.147 FTA Review of Plans

This provision spells out factors FTA will consider in reviewing each plan, including whether the submission is complete, whether the plan complies with the substance of the ADA regulation, whether the entity complied with the public participation requirements in developing the plan, efforts by the entity to coordinate with other entities in a plan submission, and any comments submitted by the states.

These elements are not the only items that will be reviewed by FTA. Every portion of the plan will be reviewed and assessed for compliance with the regulation. This section merely highlights those provisions thought most important by the Department.

Section 37.151 Waiver for Undue Financial Burden

The Department has adopted a five-year phase-in for paratransit service. Under this scheme, each entity required to provide paratransit service will be able to design a phase-in of its service specifically geared to local circumstances. While all jurisdictions will not receive approval for plans with a five year phase-in, each entity will be able to request what it needs based on local circumstances. Generally, the section allows an entity to request a wavier at any time it determines that it will not be able to meet a five-year phase-in or make measured progress toward its full compliance date specified in its original plan.

A waiver for undue financial burden should be requested if one of the following circumstances applies. First, when the entity submits its first plan on January 26, 1992, if the entity knows it will not be able to reach full compliance within five years, or if the entity cannot make measured progress the first year it may submit a waiver request. The entity also should apply for a waiver, if, during plan implementation, there are changed circumstances which make it unlikely that compliance will be possible.

The concept of measured progress should be given its plain meaning. It is not acceptable to submit a plan which shows significant progress in implementing a plan in years four and five, but no progress in years one and two. Similarly, the progress must be susceptible to objective verification. An entity cannot merely ''work toward'' developing a particular aspect of a plan.

The Department intends that undue burden waiver requests will be given close scrutiny, and waiver will not be granted highly. In reviewing requests, however, as the legislative history indicates, FTA will look at the individual financial constraints within which each public entity operates its fixed route system. ''Any determination of undue financial burden cannot have assumed the collection of additional revenues, such as those received through increases in local taxes or legislative appropriations, which would not have otherwise been made available to the fixed route operator.'' (H. Rept. 101–485, Pt. 1, at 31)

Section 37.153 FTA Waiver Determination

If the FTA Administrator grants a waiver for undue financial burden, the waiver will be for a specified period of time and the Administrator will determine what the entity must do to meet its responsibilities under the ADA. Each determination will involve a judgment of what is appropriate on a case-by-case basis. Since each waiver will be granted based on individual circumstances, the Department does not deem it appropriate to specify a generally applicable duration for a waiver.

When a waiver is granted, the rule calls for entities to look first at limiting the number of trips provided to each individual as a means of providing service that does not create an undue burden. This capacity constraint, unlike manipulations of other service criteria, will not result in a degradation of the quality of service. An entity intending to submit an undue burden waiver request should take this approach into account in its planning process.

It should be noted that requiring an entity to provide paratransit service at least during core hours along key routes is one option that the Administrator has available in making a decision about the service to be provided. This requirement stems from the statutory provision that the Administrator can require the entity to provide a minimum level of service, even if to do so would be an undue financial burden. Certainly part of a request for a waiver could be a locally endorsed alternative to this description of basic service. The rule states explicitly the Administrator's discretion to return the application for more information if necessary.

Section 37.155 Factors in Decision to Grant an Undue Financial Burden Waiver

Factors the Administrator will consider in making a decision whether to grant an undue financial burden waiver request include effects on current fixed route service, reductions in other services, increases in fares, resources available to implement complementary paratransit over the period of the plan, current level of accessible service (fixed route and paratransit), cooperation among transit providers, evidence of increased efficiencies that have been or could be used, any unique circumstances that may affect the entity's ability to provide paratransit service, the level of per capita service being provided, both to the population as a whole and what is being or anticipated to be provided to persons who are eligible and registered to receive ADA paratransit service.

This final element allows some measure of comparability, regardless of the specific service criteria and should assist in a general assessment of level of effort.

It is only the costs associated with providing paratransit service to ADA-paratransit eligible persons that can be counted in assessing whether or not there is an undue financial burden. Two cost factors are included in the considerations which enhance the Administrator's ability to assess real commitment to these paratransit provisions.

First, the Department will allow a statistically valid methodology for estimating number of trips mandated by the ADA. While the regulation calls for a trip-by-trip determination of eligibility, this provision recognizes that this is not possible for some systems, particularly the large systems. Since only those trips provided to a person when he or she is ADA eligible may be counted in determining an undue financial burden, this provision is necessary.

Second, in determining costs to be counted toward providing paratransit service, paragraph (b)(3) allows an entity to include in its paratransit budget dollars to which it is legally entitled, but which, as a matter of state or local funding arrangements, are provided to another entity that is actually providing the paratransit service.

For example, a state government may provide a certain formula allocation of the revenue from a certain tax to each jurisdiction for use in providing transportation service at the local level. The funds, depending on local arrangements, may flow either to a transit authority—a regulated entity under this rule—or to a city or county government. If the funds go to the transit authority, they clearly may be counted in an undue burden calculation. In addition, however, this provision also allows funds that flow through the city or county government to be counted in the undue burden calculation, since they are basically the same funds and should not be treated differently based on the accident of previously-determined local arrangements. On the other hand, this provision does not allow funds of a private non-profit or other organization who uses Department of Health and Human Services grant or private contributions to be counted toward the entity's financial commitment to paratransit.

SUBPART G—PROVISION OF SERVICE

Section 37.161 Maintenance of Accessible Features—General

This section applies to all entities providing transportation services, public and private. It requires those entities to maintain in operative condition those features or facilities and equipment that make facilities and vehicles accessible to and usable by individuals with disabilities.

The ADA requires that, to the maximum extent feasible, facilities be accessible to and usable by individuals with disabilities. This section recognizes that it is not sufficient to provide features such as lift-equipped vehicles, elevators, communications systems to provide information to people with vision or

hearing impairments, etc. if these features are not maintained in a manner that enables individuals with disabilities to use them. Inoperative lifts or elevators, locked accessible doors, accessible paths of travel that are blocked by equipment or boxes of materials are not accessible to or usable by individuals with disabilities.

The rule points out that temporary obstructions or isolated instances of mechanical failure would not be considered violations of the ADA or this rule. Repairs must be made ''promptly.'' The rule does not, and probably could not, state a time limit for making particular repairs, given the variety of circumstances involved. However, repairing accessible features must be made a high priority. Allowing obstructions or out of order accessibility equipment to persist beyond a reasonable period of time would violate this Part, as would mechanical failures due to improper or inadequate maintenance. Failure of the entity to ensure that accessible routes are free of obstruction and properly maintained, or failure to arrange prompt repair of inoperative elevators, lifts, or other accessibility-related equipment, would also violate this part.

The rule also requires that accommodations be made to individuals with disabilities who would otherwise use an inoperative accessibility feature. For example, when a rail system discovers that an elevator is out of order, blocking access to one of its stations, it could accommodate users of the station by announcing the problem at other stations to alert passengers and offer accessible shuttle bus service around the temporarily inaccessible station. If a public address system were out of order, the entity could designate personnel to provide information to customers with visual impairments.

Section 37.163 Keeping Vehicle Lifts in Operative Condition—Public Entities

This section applies only to public entities. Of course, like vehicle acquisition requirements and other provisions applying to public entities, these requirements also apply when private entities ''stand in the shoes'' of public entities in contracting situations, as provided in §37.23.

This section's first requirement is that the entity establish a system of regular and frequent maintenance checks of lifts sufficient to determine if they are operative.

Vehicle and equipment maintenance is an important component of successful accessible service. In particular, an aggressive preventive maintenance program for lifts is essential. Lifts remain rather delicate pieces of machinery, with many moving parts, which often must operate in a harsh environment of potholes, dust and gravel, variations in temperature, snow, slush, and deicing compounds. It is not surprising that they sometimes break down.

The point of a preventive maintenance program is to prevent breakdowns, of course. But it is also important to catch broken lifts as soon as possible, so that they can be repaired promptly. Especially in a bus system with relatively low lift usage, it is possible that a vehicle could go for a number of days without carrying a passenger who uses the lift. It is highly undesirable for the next passenger who needs a lift to be the person who discovers that the lift is broken, when a maintenance check by the operator could have discovered the problem days earlier, resulting in its repair.

Therefore, the entity must have a system for regular and frequent checks, sufficient to determine if lifts are actually operative. This is not a requirement for the lift daily. (Indeed, it is not, as such, a requirement for lift cycling at all. If there is another means available of checking the lift, it may be used.) If alternate day checks, for example, are sufficient to determine that lifts are actually working, then they are permitted. If a lift is used in service on a given day, that may be sufficient to determine that the lift is operative with respect to the next day. It would be a violation of this part, however, for the entity to neglect to check lifts regularly and frequently, or to exhibit a pattern of lift breakdowns in service resulting in stranded passengers when the lifts had not been checked before the vehicle failed to provide required accessibility to passengers that day.

When a lift breaks down in service, the driver must let the entity know about the problem by the most immediate means available. If the vehicle is equipped with a radio or telephone, the driver must call in the problem on the spot. If not, then the driver would have to make a phone call at the first opportunity (e.g., from a phone booth during the turnaround time at the end of the run). It is not sufficient to wait until the end of the day and report the problem when the vehicle returns to the barn.

When a lift is discovered to be inoperative, either because of an in-service failure or as the result of a maintenance check, the entity must take the vehicle out of service before the beginning of its next service day (with the exception discussed below) and repair the lift before the vehicle is put back into service. In the case of an in-service failure, this means that the vehicle can continue its runs on that day, but cannot start a new service day before the lift is repaired. If a maintenance check in the evening after completion of a day's run or in the morning before a day's runs discloses the problem, then the bus would not go into service until the repair had taken place.

The Department realizes that, in the years before bus fleets are completely accessible, taking buses with lifts out of service for repairs in this way would probably result in an

inaccessible spare bus being used on the route, but at least attention would have to be paid quickly to the lift repair, resulting in a quicker return to service of a working accessible bus.

The rule provides an exception for those situations in which there is no spare vehicle (either accessible or inaccessible) available to take the place of the vehicle with an operative lift, such that putting the latter vehicle into the shop would result in a reduction of service to the public (e.g., a scheduled run on a route could not be made). The Department would emphasize that the exception does not apply when there is any spare vehicle available.

Where the exception does apply, the provider may keep the vehicle with the inoperative lift in service for a maximum of three days (for providers operating in an area of over 50,000 population) or five days (for providers operating in an area of 50,000 population or less). After these times have elapsed, the vehicle must go into the shop, not to return until the lift is repaired. Even during the three- or five-day period, if an accessible spare bus becomes available at any time, it must be used in place of the bus with the inoperative lift or an inaccessible spare that is being used in its place.

In a fixed route system, if a bus is operating without a working lift (either on the day when the lift fails in service or as the result of the exception discussed above) and headways between accessible buses on the route on which the vehicle is operating exceed 30 minutes, the entity must accommodate passengers who would otherwise be inconvenienced by the lack of an accessible bus. This accommodation would be by a paratransit or other special vehicle that would pick up passengers with disabilities who cannot use the regular bus because its lift is inoperative. Passengers who need lifts in this situation would, in effect, be ADA paratransit eligible under the second eligibility category. However, since they would have no way of knowing that the bus they sought to catch would not be accessible that day, the transit authority must actively provide alternative service to them. This could be done, for example, by having a ''shadow'' accessible service available along the route or having the bus driver call in the minute he saw an accessible passenger he could not pick up (including the original passenger stranded by an in-service lift failure), with a short (i.e., less than 30-minute) response from an accessible vehicle dispatched to pick up the stranded passenger. To minimize problems in providing such service, when a transit authority is using the ''no spare vehicles'' exception, the entity could place the vehicle with the inoperative lift on a route with headways between accessible buses shorter than 30 minutes.

Section 37.165 Lift and Securement Use

This provision applies to both public and private entities.

All people using common wheelchairs (an inclusive term for mobility devices that fit on lifts meeting Access Board guideline dimensions—30″ by 48″ and a maximum of 600 pounds for device and user combined—which includes three-wheeled scooters and other so-called non-traditional mobility devices) are to be allowed to ride the entity's vehicles.

Entities may require wheelchair users to ride in designated securement locations. That is, the entity is not required to carry wheelchair users whose wheelchairs would have to park in an aisle or other location where they could obstruct other persons' passage or where they could not be secured or restrained. An entity's vehicle is not required to pick up a wheelchair user when the securement locations are full, just as the vehicle may pass by other passengers waiting at the stop if the bus is full.

The entity may require that wheelchair users make use of securement systems for their mobility devices. The entity, in other words, can require wheelchair users to ''buckle up'' their mobility devices. The entity is required, on a vehicle meeting part 38 standards, to use the securement system to secure wheelchairs as provided in that part. On other vehicles (e.g., existing vehicles with securement systems which do not comply with Part 38 standards), the entity must provide and use a securement system to ensure that the mobility device remains within the securement area. This latter requirement is a mandate to use best efforts to restrain or confine the wheelchair to the securement area. The entity does the best it can, given its securement technology and the nature of the wheelchair. The Department encourages entities with relatively less adequate securement systems on their vehicles, where feasible, to retrofit the vehicles with better securement systems, that can successfully restrain a wide variety of wheelchairs. It is our understanding that the cost of doing so is not enormous.

An entity may not, in any case, deny transportation to a common wheelchair and its user because the wheelchair cannot be secured or restrained by a vehicle's securement system, to the entity's satisfaction.

Entities have often recommended or required that a wheelchair user transfer out of his or her own device into a vehicle seat. Under this rule, it is no longer permissible to require such a transfer. The entity may provide information on risks and make a recommendation with respect to transfer, but the final decision on whether to transfer is up to the passenger.

The entity's personnel have an obligation to ensure that a passenger with a disability is able to take advantage of the accessibility

and safety features on vehicles. Consequently, the driver or other personnel must provide assistance with the use of lifts, ramps, and securement devices. For example, the driver must deploy the lift properly and safely. If the passenger cannot do so independently, the driver must assist the passenger with using the securement device. On a vehicle which uses a ramp for entry, the driver may have to assist in pushing a manual wheelchair up the ramp (particularly where the ramp slope is relatively steep). All these actions my involve a driver leaving his seat. Even in entities whose drivers traditionally do not leave their seats (e.g., because of labor-management agreements or company rules), this assistance must be provided. This rule overrides any requirements to the contrary.

Wheelchair users—especially those using electric wheelchairs often have a preference for entering a lift platform and vehicle in a particular direction (e.g., backing on or going on frontwards). Except where the only way of successfully maneuvering a device onto a vehicle or into its securement area, or an overriding safety concern (i.e., a direct threat) requires one way of doing this or another, the transit provider should respect the passenger's preference. We note that most electric wheelchairs are usually not equipped with rearview mirrors, and that many persons who use them are not able to rotate their heads sufficiently to see behind. When an electric wheelchair must back up a considerable distance, this can have unfortunate results for other people's toes.

People using canes or walkers and other standees with disabilities who do not use wheelchairs but have difficulty using steps (e.g., an elderly person who can walk on a plane without use of a mobility aid but cannot raise his or her legs sufficiently to climb bus steps) must also be permitted to use the lift, on request.

Section 37.167 Other Service Requirements

The requirements in this section apply to both public and private entities.

On fixed route systems, the entity must announce stops. These stops include transfer points with other fixed routes. This means that any time a vehicle is to stop where a passenger can get off and transfer to another bus or rail line (or to another form of transportation, such as commuter rail or ferry), the stop would be announced. The announcement can be made personally by the vehicle operator or can be made by a recording system. If the vehicle is small enough so that the operator can make himself or herself heard without a P.A. system, it is not necessary to use the system.

Announcements also must be made at major intersections or destination points. The rule does not define what major intersections or destination points are. This is a judgmental matter best left to the local planning process. In addition, the entity must make announcements at sufficient intervals along a route to orient a visually impaired passenger to his or her location. The other required announcements may serve this function in many instances, but if there is a long distance between other announcements, fill-in orientation announcements would be called for. The entity must announce any stop requested by a passenger with a disability, even if it does not meet any of the other criteria for announcement.

When vehicles from more than one route serve a given stop or station, the entity must provide a means to assist an individual with a visual impairment or other disability in determining which is the proper vehicle to enter. Some entities have used external speakers. FTA is undertaking a study to determine what is the best available technology in this area. Some transit properties have used colored mitts, or numbered cards, to allow passengers to inform drivers of what route they wanted to use. The idea is to prevent, at a stop where vehicles from a number of routes arrive, a person with a visual impairment from having to ask every driver whether the bus is the right one. The rule does not prescribe what means is to be used, only that some effective means be provided.

Service animals shall always be permitted to accompany their users in any private or public transportation vehicle or facility. One of the most common misunderstandings about service animals is that they are limited to being guide dogs for persons with visual impairments. Dogs are trained to assist people with a wide variety of disabilities, including individuals with hearing and mobility impairments. Other animals (e.g., monkeys) are sometimes used as service animals as well. In any of these situations, the entity must permit the service animal to accompany its user.

Part 38 requires a variety of accessibility equipment. This section requires that the entity use the equipment it has. For example, it would be contrary to this provision for a transit authority to bolt its bus lifts shut because transit authority had difficulty maintaining the lifts. It does little good to have a public address system on a vehicle if the operator does not use it to make announcements (except, as noted above, in the situation where the driver can make himself or herself heard without recourse to amplification.)

Entities must make communications and information available, using accessible formats and technology (e.g., Braille, large print, TDDs) to obtain information about transportation services. Someone cannot adequately use the bus system if schedule and route information is not available in a form he or she can use. If there is only one phone line on which ADA paratransit eligible

individuals can reserve trips, and the line is chronically busy, individuals cannot schedule service. Such obstacles to the use of transportation service are contrary to this section. (The latter could, in some circumstances, be viewed as a capacity constraint.)

It is inconsistent with this section for a transit provider to refuse to let a passenger use a lift at any designated stop, unless the lift is physically unable to deploy or the lift would be damaged if it did deploy (see discussion under §37.123). In addition, if a temporary situation at the stop (e.g., construction, an accident, a landslide) made the stop unsafe for anyone to use, the provider could decline to operate the lift there (just as it refused to open the door for other passengers at the same point). The provider could not, however, declare a stop ''off limits'' to persons with disabilities that is used for other persons. If the transit authority has concerns about barriers or safety hazards that peculiarly affect individuals with disabilities that would use the stop, it should consider making efforts to move the stop.

Under DOT hazardous materials rules, a passenger may bring a portable medical oxygen supply on board a vehicle. Since the hazardous materials rules permit this, transit providers cannot prohibit it. For further information on hazardous materials rules, as they may affect transportation of assistive devices, entities may contact the Department's Research and Special Programs Administration, Office of Hazardous Materials Transportation (202–366–0656).

One concern that has been expressed is that transportation systems (particularly some rail systems) may make it difficult for persons with disabilities to board or disembark from vehicles by very rapidly closing doors on the vehicles before individuals with disabilities (who may move more slowly through crowds in the vehicle or platform than other persons) have a chance to get on or off the vehicle. Doing so is contrary to the rule; operators must make appropriate provision to give individuals with disabilities adequate time to board or disembark.

Section 37.169 Interim Requirements for Over-the-Road Bus Service Operated by Private Entities

Private over-the-road bus (OTRB) service is, first of all, subject to all the other private entity requirements of the rule. The requirements of this section are in addition to the other applicable provisions.

Boarding assistance is required. The Department cannot require any particular boarding assistance devices at this time. Each operator may decide what mode of boarding assistance is appropriate for its operation. We agree with the discussion in the DOJ Title II rule's preamble that carrying is a disfavored method of providing assistance to an individual with a disability. However, since accessible private OTRBs cannot be required by this rule, there may be times when carrying is the only available means of providing access to an OTRB, if the entity does not exercise its discretion to provide an alternative means. It is required by the rule that any employee who provides boarding assistance—above all, who may carry or otherwise directly physically assist a passenger—must be trained to provide this assistance appropriately and safely.

The baggage priority provision for wheelchairs and other assistive devices involves a similar procedure to that established in the Department's Air Carrier Access Act rule (14 CFR part 382). In brief, it provides that, at any given stop, a person with a wheelchair or other assistive device would have the device loaded before other items at this stop. An individual traveling with a wheelchair is not similarly situated to a person traveling with luggage. For the wheelchair user, the wheelchair is an essential mobility device, without which travel is impossible. The rationale of this provision is that, while no one wants his or her items left behind, carrying the wheelchair is more important to its user than ordinary luggage to a traveler. If it comes to an either/or choice (the wheelchair user's luggage would not have any priority over other luggage, however). There would be no requirement, under this provision, for ''bumping'' baggage already on the bus from previous stops in order to make room for the wheelchair.

The entity could require advance notice from a passenger in only one circumstance. If a passenger needed boarding assistance, the entity could require up to 48 hours' advance notice for the purpose of providing needed assistance. While advance notice requirements are generally undesirable, this appears to be a case in which a needed accommodation may be able to be provided successfully only if the transportation provider knows in advance that some extra staffing is needed to accomplish it. While the primary need for advance notice appears to be in the situation of an unstaffed station, there could be other situations in which advance notice was needed in order to ensure that the accommodation could be made. Entities should not ask for advance notice in all cases, but just in those cases in which it is really needed for this purpose. Even if advance notice is not provided, the entity has the obligation to provide boarding assistance if it can be provided with available staff.

Section 37.171 Equivalency Requirement for Demand Responsive Service Operated by Private Entities Not Primarily in the Business of Transporting People

This provision is a service requirement closely related to the private entity requirements for §§37.101–37.105 of this part. Entities in this category are always required to provide equivalent service, regardless of what they are doing with respect to the acquisition of vehicles. The effect of this provision may be to require some entities to arrange, either through acquiring their own accessible vehicles or coordinating with other providers, to have accessible vehicles available to meet the equivalency standards of §37.105 or otherwise to comply with those standards.

Section 37.173 Training

A well-trained workforce is essential in ensuring that the accessibility-related equipment and accommodations required by the ADA actually result in the delivery of good transportation service to individuals with disabilities. The utility of training was recognized by Congress as well. (*See* S. Rept. 100–116 at 48.) At the same time, we believe that training should be conducted in an efficient and effective manner, with appropriate flexibility allowed to the organizations that must carry it out. Each transportation provider is to design a training program which suits the needs of its particular operation. While we are confident of this approach, we are mindful that the apparent lack of training has been a source of complaint to FTA and transit providers. Good training is difficult and it is essential.

Several points of this section deserve emphasis. First, the requirements for training apply to private as well as to public providers, of demand responsive as well as of fixed route service. Training is just as necessary for the driver of a taxicab, a hotel shuttle, or a tour bus as it is for a driver in an FTA-funded city bus system.

Second, training must be to proficiency. The Department is not requiring a specific course of training or the submission of a training plan for DOT approval. However, every employee of a transportation provider who is involved with service to persons with disabilities must have been trained so that he or she knows what needs to be done to provide the service in the right way. When it comes to providing service to individuals with disabilities, ignorance is no excuse for failure.

While there is no specific requirement for recurrent or refresher training, there is an obligation to ensure that, at any given time, employees are trained to proficiency. An employee who has forgotten what he was told in past training sessions, so that he or she does not know what needs to be done to serve individuals with disabilities, does not meet the standard of being trained to proficiency.

Third, training must be appropriate to the duties of each employee. A paratransit dispatcher probably must know how to use a TDD and enough about various disabilities to know what sort of vehicle to dispatch. A bus driver must know how to operate lifts and securement devices properly. A mechanic who works on lifts must know how to maintain them. Cross-training, while useful in some instances, is not required, so long as each employee is trained to proficiency in what he or she does with respect to service to individuals with disabilities.

Fourth, the training requirement goes both to technical tasks and human relations. Employees obviously need to know how to run equipment the right way. If an employee will be assisting wheelchair users in transferring from a wheelchair to a vehicle seat, the employee needs training in how to do this safely. But every public contact employee also has to understand the necessity of treating individuals with disabilities courteously and respectfully, and the details of what that involves.

One of the best sources of information on how best to train personnel to interact appropriately with individuals with disabilities is the disability community itself. Consequently, the Department urges entities to consult with disability organizations concerning how to train their personnel. Involving these groups in the process of establishing training programs, in addition to providing useful information, should help to establish or improve working relationships among transit providers and disability groups that, necessarily, will be of long duration. We note that several transit providers use persons with disabilities to provide the actual training. Others have reported that role playing is an effective method to instill an appreciation of the particular perspective of one traveling with a disability.

Finally, one of the important points in training concerns differences among individuals with disabilities. All individuals with disabilities, of course, are not alike. The appropriate ways one deals with persons with various kinds of disabilities (e.g., mobility, vision, hearing, or mental impairments) are likely to differ and, while no one expects bus drivers to be trained as disability specialists, recognizing relevant differences and responding to them appropriately is extremely significant. Public entities who contract with private entities to have service provided—above all, complementary paratransit—are responsible for ensuring that contractor personnel receive the appropriate training.

[56 FR 45621, Sept. 6, 1991, as amended at 61 FR 25416, May 21, 1996]

PART 38—AMERICANS WITH DISABILITIES ACT (ADA) ACCESSIBILITY SPECIFICATIONS FOR TRANSPORTATION VEHICLES

Subpart A—General

Sec.
38.1 Purpose.
38.2 Equivalent facilitation.
38.3 Definitions.
38.4 Miscellaneous instructions.

Subpart B—Buses, Vans and Systems

38.21 General.
38.23 Mobility aid accessibility.
38.25 Doors, steps and thresholds.
38.27 Priority seating signs.
38.29 Interior circulation, handrails and stanchions.
38.31 Lighting.
38.33 Fare box.
38.35 Public information system.
38.37 Stop request.
38.39 Destination and route signs.

Subpart C—Rapid Rail Vehicles and Systems

38.51 General.
38.53 Doorways.
38.55 Priority seating signs.
38.57 Interior circulation, handrails and stanchions.
38.59 Floor surfaces.
38.61 Public information system.
38.63 Between-car barriers.

Subpart D—Light Rail Vehicles and Systems

38.71 General.
38.73 Doorways.
38.75 Priority seating signs.
38.77 Interior circulation, handrails and stanchions.
38.79 Floors, steps and thresholds.
38.81 Lighting.
38.83 Mobility aid accessibility.
38.85 Between-car barriers.
38.87 Public information system.

Subpart E—Commuter Rail Cars and Systems

38.91 General.
38.93 Doorways.
38.95 Mobility aid accessibility.
38.97 Interior circulation, handrails and stanchions.
38.99 Floors, steps and thresholds.
38.101 Lighting.
38.103 Public information system.
38.105 Priority seating signs.
38.107 Restrooms.
38.109 Between-car barriers.

Subpart F—Intercity Rail Cars and Systems

38.111 General.
38.113 Doorways.
38.115 Interior circulation, handrails and stanchions.
38.117 Floors, steps and thresholds.
38.119 Lighting.
38.121 Public information system.
38.123 Restrooms.
38.125 Mobility aid accessibility.
38.127 Sleeping compartments.

Subpart G—Over-the-Road Buses and Systems

38.151 General.
38.153 Doors, steps and thresholds.
38.155 Interior circulation, handrails and stanchions.
38.157 Lighting.
38.159 Mobility aid accessibility.
38.161 Moveable aisle armrests.

Subpart H—Other Vehicles and Systems

38.171 General.
38.173 Automated guideway transit vehicles and systems.
38.175 High-speed rail cars, monorails and systems.
38.177 Ferries, excursion boats and other vessels. [Reserved]
38.179 Trams, and similar vehicles, and systems.
FIGURES TO PART 38
APPENDIX TO PART 38—GUIDANCE MATERIAL

AUTHORITY: 42 U.S.C. 12101–12213; 49 U.S.C. 322.

SOURCE: 56 FR 45756, Sept. 6, 1991, unless otherwise noted.

Subpart A—General

§ 38.1 Purpose.

This part provides minimum guidelines and requirements for accessibility standards in part 37 of this title for transportation vehicles required to be accessible by the Americans With Disabilities Act (ADA) of 1990 (42 U.S.C. 1201 *et seq.*).

§ 38.2 Equivalent facilitation.

Departures from particular technical and scoping requirements of these guidelines by use of other designs and technologies are permitted where the alternative designs and technologies used will provide substantially equivalent or greater access to and usability of the vehicle. Departures are to be considered on a case-by-case basis

under procedures set forth in §37.7 of this title.

§38.3 Definitions.

See §37.3 of this title.

§38.4 Miscellaneous instructions.

(a) *Dimensional conventions.* Dimensions that are not noted as minimum or maximum are absolute.

(b) *Dimensional tolerances.* All dimensions are subject to conventional engineering tolerances for material properties and field conditions, including normal anticipated wear not exceeding accepted industry-wide standards and practices.

(c) *Notes.* The text of these guidelines does not contain notes or footnotes. Additional information, explanations, and advisory materials are located in the Appendix.

(d) *General terminology.* (1) *Comply with* means meet one or more specification of these guidelines.

(2) *If* or *if * * * then* denotes a specification that applies only when the conditions described are present.

(3) *May* denotes an option or alternative.

(4) *Shall* denotes a mandatory specification or requirement.

(5) *Should* denotes an advisory specification or recommendation.

Subpart B—Buses, Vans and Systems

§38.21 General.

(a) New, used or remanufactured buses and vans (except over-the-road buses covered by subpart G of this part), to be considered accessible by regulations in part 37 of this title shall comply with the applicable provisions of this subpart.

(b) If portions of the vehicle are modified in a way that affects or could affect accessibility, each such portion shall comply, to the extent practicable, with the applicable provisions of this subpart. This provision does not require that inaccessible buses be retrofitted with lifts, ramps or other boarding devices.

§38.23 Mobility aid accessibility.

(a) *General.* All vehicles covered by this subpart shall provide a level-change mechanism or boarding device (e.g., lift or ramp) complying with paragraph (b) or (c) of this section and sufficient clearances to permit a wheelchair or other mobility aid user to reach a securement location. At least two securement locations and devices, complying with paragraph (d) of this section, shall be provided on vehicles in excess of 22 feet in length; at least one securement location and device, complying with paragraph (d) of this section, shall be provided on vehicles 22 feet in length or less.

(b) *Vehicle lift*—(1) *Design load.* The design load of the lift shall be at least 600 pounds. Working parts, such as cables, pulleys, and shafts, which can be expected to wear, and upon which the lift depends for support of the load, shall have a safety factor of at least six, based on the ultimate strength of the material. Nonworking parts, such as platform, frame, and attachment hardware which would not be expected to wear, shall have a safety factor of at least three, based on the ultimate strength of the material.

(2) *Controls*—(i) *Requirements.* The controls shall be interlocked with the vehicle brakes, transmission, or door, or shall provide other appropriate mechanisms or systems, to ensure that the vehicle cannot be moved when the lift is not stowed and so the lift cannot be deployed unless the interlocks or systems are engaged. The lift shall deploy to all levels (i.e., ground, curb, and intermediate positions) normally encountered in the operating environment. Where provided, each control for deploying, lowering, raising, and stowing the lift and lowering the roll-off barrier shall be of a momentary contact type requiring continuous manual pressure by the operator and shall not allow improper lift sequencing when the lift platform is occupied. The controls shall allow reversal of the lift operation sequence, such as raising or lowering a platform that is part way down, without allowing an occupied platform to fold or retract into the stowed position.

(ii) *Exception.* Where the lift is designed to deploy with its long dimension parallel to the vehicle axis and which pivots into or out of the vehicle while occupied (i.e., ''rotary lift''), the

requirements of this paragraph prohibiting the lift from being stowed while occupied shall not apply if the stowed position is within the passenger compartment and the lift is intended to be stowed while occupied.

(3) *Emergency operation.* The lift shall incorporate an emergency method of deploying, lowering to ground level with a lift occupant, and raising and stowing the empty lift if the power to the lift fails. No emergency method, manual or otherwise, shall be capable of being operated in a manner that could be hazardous to the lift occupant or to the operator when operated according to manufacturer's instructions, and shall not permit the platform to be stowed or folded when occupied, unless the lift is a rotary lift and is intended to be stowed while occupied.

(4) *Power or equipment failure.* Platforms stowed in a vertical position, and deployed platforms when occupied, shall have provisions to prevent their deploying, falling, or folding any faster than 12 inches/second or their dropping of an occupant in the event of a single failure of any load carrying component.

(5) *Platform barriers.* The lift platform shall be equipped with barriers to prevent any of the wheels of a wheelchair or mobility aid from rolling off the platform during its operation. A movable barrier or inherent design feature shall prevent a wheelchair or mobility aid from rolling off the edge closest to the vehicle until the platform is in its fully raised position. Each side of the lift platform which extends beyond the vehicle in its raised position shall have a barrier a minimum 1½ inches high. Such barriers shall not interfere with maneuvering into or out of the aisle. The loading-edge barrier (outer barrier) which functions as a loading ramp when the lift is at ground level, shall be sufficient when raised or closed, or a supplementary system shall be provided, to prevent a power wheelchair or mobility aid from riding over or defeating it. The outer barrier of the lift shall automatically raise or close, or a supplementary system shall automatically engage, and remain raised, closed, or engaged at all times that the platform is more than 3 inches above the roadway or sidewalk and the platform is occupied. Alternatively, a barrier or system may be raised, lowered, opened, closed, engaged, or disengaged by the lift operator, provided an interlock or inherent design feature prevents the lift from rising unless the barrier is raised or closed or the supplementary system is engaged.

(6) *Platform surface.* The platform surface shall be free of any protrusions over ¼ inch high and shall be slip resistant. The platform shall have a minimum clear width of 28½ inches at the platform, a minimum clear width of 30 inches measured from 2 inches above the platform surface to 30 inches above the platform, and a minimum clear length of 48 inches measured from 2 inches above the surface of the platform to 30 inches above the surface of the platform. (See Fig. 1)

(7) *Platform gaps.* Any openings between the platform surface and the raised barriers shall not exceed ⅝ inch in width. When the platform is at vehicle floor height with the inner barrier (if applicable) down or retracted, gaps between the forward lift platform edge and the vehicle floor shall not exceed ½ inch horizontally and ⅝ inch vertically. Platforms on semi-automatic lifts may have a hand hold not exceeding 1½ inches by 4½ inches located between the edge barriers.

(8) *Platform entrance ramp.* The entrance ramp, or loading-edge barrier used as a ramp, shall not exceed a slope of 1:8, measured on level ground, for a maximum rise of 3 inches, and the transition from roadway or sidewalk to ramp may be vertical without edge treatment up to ¼ inch. Thresholds between ¼ inch and ½ inch high shall be beveled with a slope no greater than 1:2.

(9) *Platform deflection.* The lift platform (not including the entrance ramp) shall not deflect more than 3 degrees (exclusive of vehicle roll or pitch) in any direction between its unloaded position and its position when loaded with 600 pounds applied through a 26 inch by 26 inch test pallet at the centroid of the platform.

(10) *Platform movement.* No part of the platform shall move at a rate exceeding 6 inches/second during lowering and lifting an occupant, and shall not exceed 12 inches/second during deploying

or stowing. This requirement does not apply to the deployment or stowage cycles of lifts that are manually deployed or stowed. The maximum platform horizontal and vertical acceleration when occupied shall be 0.3g.

(11) *Boarding direction.* The lift shall permit both inboard and outboard facing of wheelchair and mobility aid users.

(12) *Use by standees.* Lifts shall accommodate persons using walkers, crutches, canes or braces or who otherwise have difficulty using steps. The platform may be marked to indicate a preferred standing position.

(13) *Handrails.* Platforms on lifts shall be equipped with handrails on two sides, which move in tandem with the lift, and which shall be graspable and provide support to standees throughout the entire lift operation. Handrails shall have a usable component at least 8 inches long with the lowest portion a minimum 30 inches above the platform and the highest portion a maximum 38 inches above the platform. The handrails shall be capable of withstanding a force of 100 pounds concentrated at any point on the handrail without permanent deformation of the rail or its supporting structure. The handrail shall have a cross-sectional diameter between 1¼ inches and 1½ inches or shall provide an equivalent grasping surface, and have eased edges with corner radii of not less than ⅛ inch. Handrails shall be placed to provide a minimum 1½ inches knuckle clearance from the nearest adjacent surface. Handrails shall not interfere with wheelchair or mobility aid maneuverability when entering or leaving the vehicle.

(c) *Vehicle ramp*—(1) *Design load.* Ramps 30 inches or longer shall support a load of 600 pounds, placed at the centroid of the ramp distributed over an area of 26 inches by 26 inches, with a safety factor of at least 3 based on the ultimate strength of the material. Ramps shorter than 30 inches shall support a load of 300 pounds.

(2) *Ramp surface.* The ramp surface shall be continuous and slip resistant; shall not have protrusions from the surface greater than ¼ inch high; shall have a clear width of 30 inches; and shall accommodate both four-wheel and three-wheel mobility aids.

(3) *Ramp threshold.* The transition from roadway or sidewalk and the transition from vehicle floor to the ramp may be vertical without edge treatment up to ¼ inch. Changes in level between ¼ inch and ½ inch shall be beveled with a slope no greater than 1:2.

(4) *Ramp barriers.* Each side of the ramp shall have barriers at least 2 inches high to prevent mobility aid wheels from slipping off.

(5) *Slope.* Ramps shall have the least slope practicable and shall not exceed 1:4 when deployed to ground level. If the height of the vehicle floor from which the ramp is deployed is 3 inches or less above a 6-inch curb, a maximum slope of 1:4 is permitted; if the height of the vehicle floor from which the ramp is deployed is 6 inches or less, but greater than 3 inches, above a 6-inch curb, a maximum slope of 1:6 is permitted; if the height of the vehicle floor from which the ramp is deployed is 9 inches or less, but greater than 6 inches, above a 6-inch curb, a maximum slope of 1:8 is permitted; if the height of the vehicle floor from which the ramp is deployed is greater than 9 inches above a 6-inch curb, a slope of 1:12 shall be achieved. Folding or telescoping ramps are permitted provided they meet all structural requirements of this section.

(6) *Attachment.* When in use for boarding or alighting, the ramp shall be firmly attached to the vehicle so that it is not subject to displacement when loading or unloading a heavy power mobility aid and that no gap between vehicle and ramp exceeds ⅝ inch.

(7) *Stowage.* A compartment, securement system, or other appropriate method shall be provided to ensure that stowed ramps, including portable ramps stowed in the passenger area, do not impinge on a passenger's wheelchair or mobility aid or pose any hazard to passengers in the event of a sudden stop or maneuver.

(8) *Handrails.* If provided, handrails shall allow persons with disabilities to grasp them from outside the vehicle while starting to board, and to continue to use them throughout the boarding process, and shall have the top between 30 inches and 38 inches above the ramp surface. The handrails

shall be capable of withstanding a force of 100 pounds concentrated at any point on the handrail without permanent deformation of the rail or its supporting structure. The handrail shall have a cross-sectional diameter between 1¼ inches and 1½ inches or shall provide an equivalent grasping surface, and have eased edges with corner radii of not less than ⅛ inch. Handrails shall not interfere with wheelchair or mobility aid maneuverability when entering or leaving the vehicle.

(d) *Securement devices*—(1) *Design load.* Securement systems on vehicles with GVWRs of 30,000 pounds or above, and their attachments to such vehicles, shall restrain a force in the forward longitudinal direction of up to 2,000 pounds per securement leg or clamping mechanism and a minimum of 4,000 pounds for each mobility aid. Securement systems on vehicles with GVWRs of up to 30,000 pounds, and their attachments to such vehicles, shall restrain a force in the forward longitudinal direction of up to 2,500 pounds per securement leg or clamping mechanism and a minimum of 5,000 pounds for each mobility aid.

(2) *Location and size.* The securement system shall be placed as near to the accessible entrance as practicable and shall have a clear floor area of 30 inches by 48 inches. Such space shall adjoin, and may overlap, an access path. Not more than 6 inches of the required clear floor space may be accommodated for footrests under another seat provided there is a minimum of 9 inches from the floor to the lowest part of the seat overhanging the space. Securement areas may have fold-down seats to accommodate other passengers when a wheelchair or mobility aid is not occupying the area, provided the seats, when folded up, do not obstruct the clear floor space required. (See Fig. 2)

(3) *Mobility aids accommodated.* The securement system shall secure common wheelchairs and mobility aids and shall either be automatic or easily attached by a person familiar with the system and mobility aid and having average dexterity.

(4) *Orientation.* In vehicles in excess of 22 feet in length, at least one securement device or system required by paragraph (a) of this section shall secure the wheelchair or mobility aid facing toward the front of the vehicle. Additional securement devices or systems shall secure the wheelchair or mobility aid facing forward, or rearward with a padded barrier, extending from a height of 38 inches from the vehicle floor to a height of 56 inches from the vehicle floor with a width of 18 inches, laterally centered immediately in back of the seated individual. In vehicles 22 feet in length or less, the required securement device may secure the wheelchair or mobility aid either facing toward the front of the vehicle or facing rearward, with a padded barrier as described. Additional securement locations shall be either forward or rearward facing with a padded barrier. Such barriers need not be solid provided equivalent protection is afforded.

(5) *Movement.* When the wheelchair or mobility aid is secured in accordance with manufacturer's instructions, the securement system shall limit the movement of an occupied wheelchair or mobility aid to no more than 2 inches in any direction under normal vehicle operating conditions.

(6) *Stowage.* When not being used for securement, or when the securement area can be used by standees, the securement system shall not interfere with passenger movement, shall not present any hazardous condition, shall be reasonably protected from vandalism, and shall be readily accessed when needed for use.

(7) *Seat belt and shoulder harness.* For each wheelchair or mobility aid securement device provided, a passenger seat belt and shoulder harness, complying with all applicable provisions of part 571 of this title, shall also be provided for use by wheelchair or mobility aid users. Such seat belts and shoulder harnesses shall not be used in lieu of a device which secures the wheelchair or mobility aid itself.

§ 38.25 Doors, steps and thresholds.

(a) *Slip resistance.* All aisles, steps, floor areas where people walk and floors in securement locations shall have slip-resistant surfaces.

(b) *Contrast.* All step edges, thresholds and the boarding edge of ramps or

lift platforms shall have a band of color(s) running the full width of the step or edge which contrasts from the step tread and riser, or lift or ramp surface, either light-on-dark or dark-on-light.

(c) *Door height.* For vehicles in excess of 22 feet in length, the overhead clearance between the top of the door opening and the raised lift platform, or highest point of a ramp, shall be a minimum of 68 inches. For vehicles of 22 feet in length or less, the overhead clearance between the top of the door opening and the raised lift platform, or highest point of a ramp, shall be a minimum of 56 inches.

§38.27 Priority seating signs.

(a) Each vehicle shall contain sign(s) which indicate that seats in the front of the vehicle are priority seats for persons with disabilities, and that other passengers should make such seats available to those who wish to use them. At least one set of forward-facing seats shall be so designated.

(b) Each securement location shall have a sign designating it as such.

(c) Characters on signs required by paragraphs (a) and (b) of this section shall have a width-to-height ratio between 3:5 and 1:1 and a stroke width-to-height ratio between 1:5 and 1:10, with a minimum character height (using an upper case ''X'') of ⅝ inch, with ''wide'' spacing (generally, the space between letters shall be 1/16 the height of upper case letters), and shall contrast with the background either light-on-dark or dark-on-light.

§38.29 Interior circulation, handrails and stanchions.

(a) Interior handrails and stanchions shall permit sufficient turning and maneuvering space for wheelchairs and other mobility aids to reach a securement location from the lift or ramp.

(b) Handrails and stanchions shall be provided in the entrance to the vehicle in a configuration which allows persons with disabilities to grasp such assists from outside the vehicle while starting to board, and to continue using such assists throughout the boarding and fare collection process. Handrails shall have a cross-sectional diameter between 1¼ inches and 1½ inches or shall provide an equivalent grasping surface, and have eased edges with corner radii of not less than ⅛ inch. Handrails shall be placed to provide a minimum 1½ inches knuckle clearance from the nearest adjacent surface. Where on-board fare collection devices are used on vehicles in excess of 22 feet in length, a horizontal passenger assist shall be located across the front of the vehicle and shall prevent passengers from sustaining injuries on the fare collection device or windshield in the event of a sudden deceleration. Without restricting the vestibule space, the assist shall provide support for a boarding passenger from the front door through the boarding procedure. Passengers shall be able to lean against the assist for security while paying fares.

(c) For vehicles in excess of 22 feet in length, overhead handrail(s) shall be provided which shall be continuous except for a gap at the rear doorway.

(d) Handrails and stanchions shall be sufficient to permit safe boarding, on-board circulation, seating and standing assistance, and alighting by persons with disabilities.

(e) For vehicles in excess of 22 feet in length with front-door lifts or ramps, vertical stanchions immediately behind the driver shall either terminate at the lower edge of the aisle-facing seats, if applicable, or be ''dog-legged'' so that the floor attachment does not impede or interfere with wheelchair footrests. If the driver seat platform must be passed by a wheelchair or mobility aid user entering the vehicle, the platform, to the maximum extent practicable, shall not extend into the aisle or vestibule beyond the wheel housing.

(f) For vehicles in excess of 22 feet in length, the minimum interior height along the path from the lift to the securement location shall be 68 inches. For vehicles of 22 feet in length or less, the minimum interior height from lift to securement location shall be 56 inches.

§38.31 Lighting.

(a) Any stepwell or doorway immediately adjacent to the driver shall have, when the door is open, at least 2 foot-candles of illumination measured on the step tread or lift platform.

(b) Other stepwells and doorways, including doorways in which lifts or ramps are installed, shall have, at all times, at least 2 foot-candles of illumination measured on the step tread, or lift or ramp, when deployed at the vehicle floor level.

(c) The vehicle doorways, including doorways in which lifts or ramps are installed, shall have outside light(s) which, when the door is open, provide at least 1 foot-candle of illumination on the street surface for a distance 3 feet (915 mm) perpendicular to the bottom step tread or lift outer edge. Such light(s) shall be shielded to protect the eyes of entering and exiting passengers.

[56 FR 45756, Sept. 6, 1991, as amended at 63 FR 51697, 51702, Sept. 28, 1998]

§ 38.33 Fare box.

Where provided, the farebox shall be located as far forward as practicable and shall not obstruct traffic in the vestibule, especially wheelchairs or mobility aids.

§ 38.35 Public information system.

(a) Vehicles in excess of 22 feet in length, used in multiple-stop, fixed-route service, shall be equipped with a public address system permitting the driver, or recorded or digitized human speech messages, to announce stops and provide other passenger information within the vehicle.

(b) [Reserved]

§ 38.37 Stop request.

(a) Where passengers may board or alight at multiple stops at their option, vehicles in excess of 22 feet in length shall provide controls adjacent to the securement location for requesting stops and which alerts the driver that a mobility aid user wishes to disembark. Such a system shall provide auditory and visual indications that the request has been made.

(b) Controls required by paragraph (a) of this section shall be mounted no higher than 48 inches and no lower than 15 inches above the floor, shall be operable with one hand and shall not require tight grasping, pinching, or twisting of the wrist. The force required to activate controls shall be no greater than 5 lbf (22.2 N).

§ 38.39 Destination and route signs.

(a) Where destination or route information is displayed on the exterior of a vehicle, each vehicle shall have illuminated signs on the front and boarding side of the vehicle.

(b) Characters on signs required by paragraph (a) of this section shall have a width-to-height ratio between 3:5 and 1:1 and a stroke width-to-height ratio between 1:5 and 1:10, with a minimum character height (using an upper case ''X'') of 1 inch for signs on the boarding side and a minimum character height of 2 inches for front ''headsigns'', with ''wide'' spacing (generally, the space between letters shall be 1/16 the height of upper case letters), and shall contrast with the background, either dark-on-light or light-on-dark.

Subpart C—Rapid Rail Vehicles and Systems

§ 38.51 General.

(a) New, used and remanufactured rapid rail vehicles, to be considered accessible by regulations in part 37 of this title, shall comply with this subpart.

(b) If portions of the vehicle are modified in a way that affects or could affect accessibility, each such portion shall comply, to the extent practicable, with the applicable provisions of this subpart. This provision does not require that inaccessible vehicles be retrofitted with lifts, ramps or other boarding devices.

(c) Existing vehicles which are retrofitted to comply with the ''one-car-per-train rule'' of § 37.93 of this title shall comply with §§ 38.55, 38.57(b), 38.59 of this part and shall have, in new and key stations, at least one door complying with §§ 38.53 (a)(1), (b) and (d) of this part. Removal of seats is not required. Vehicles previously designed and manufactured in accordance with the accessibility requirements of part 609 of this title or the Secretary of Transportation regulations implementing section 504 of the Rehabilitation Act of 1973 that were in effect before October 7, 1991, and which can be entered and used from stations in which they are to be operated, may be

used to satisfy the requirements of § 37.93 of this title.

§ 38.53 Doorways.

(a) *Clear width.* (1) Passenger doorways on vehicle sides shall have clear openings at least 32 inches wide when open.

(2) If doorways connecting adjoining cars in a multi-car train are provided, and if such doorway is connected by an aisle with a minimum clear width of 30 inches to one or more spaces where wheelchair or mobility aid users can be accommodated, then such doorway shall have a minimum clear opening of 30 inches to permit wheelchair and mobility aid users to be evacuated to an adjoining vehicle in an emergency.

(b) *Signage.* The International Symbol of Accessibility shall be displayed on the exterior of accessible vehicles operating on an accessible rapid rail system unless all vehicles are accessible and are not marked by the access symbol. (See Fig. 6.)

(c) *Signals.* Auditory and visual warning signals shall be provided to alert passengers of closing doors.

(d) *Coordination with boarding platform*—(1) *Requirements.* Where new vehicles will operate in new stations, the design of vehicles shall be coordinated with the boarding platform design such that the horizontal gap between each vehicle door at rest and the platform shall be no greater than 3 inches and the height of the vehicle floor shall be within plus or minus ⅝ inch of the platform height under all normal passenger load conditions. Vertical alignment may be accomplished by vehicle air suspension or other suitable means of meeting the requirement.

(2) *Exception.* New vehicles operating in existing stations may have a floor height within plus or minus 1½ inches of the platform height. At key stations, the horizontal gap between at least one door of each such vehicle and the platform shall be no greater than 3 inches.

(3) *Exception.* Retrofitted vehicles shall be coordinated with the platform in new and key stations such that the horizontal gap shall be no greater than 4 inches and the height of the vehicle floor, under 50% passenger load, shall be within plus or minus 2 inches of the platform height.

§ 38.55 Priority seating signs.

(a) Each vehicle shall contain sign(s) which indicate that certain seats are priority seats for persons with disabilities, and that other passengers should make such seats available to those who wish to use them.

(b) Characters on signs required by paragraph (a) of this section shall have a width-to-height ratio between 3:5 and 1:1 and a stroke width-to-height ratio between 1:5 and 1:10, with a minimum character height (using an upper case ''X'') of ⅝ inch, with ''wide'' spacing (generally, the space between letters shall be 1/16 the height of upper case letters), and shall contrast with the background, either light-on-dark or dark-on-light.

§ 38.57 Interior circulation, handrails and stanchions.

(a) Handrails and stanchions shall be provided to assist safe boarding, on-board circulation, seating and standing assistance, and alighting by persons with disabilities.

(b) Handrails, stanchions, and seats shall allow a route at least 32 inches wide so that at least two wheelchair or mobility aid users can enter the vehicle and position the wheelchairs or mobility aids in areas, each having a minimum clear space of 48 inches by 30 inches, which do not unduly restrict movement of other passengers. Space to accommodate wheelchairs and mobility aids may be provided within the normal area used by standees and designation of specific spaces is not required. Particular attention shall be given to ensuring maximum maneuverability immediately inside doors. Ample vertical stanchions from ceiling to seat-back rails shall be provided. Vertical stanchions from ceiling to floor shall not interfere with wheelchair or mobility aid user circulation and shall be kept to a minimum in the vicinity of doors.

(c) The diameter or width of the gripping surface of handrails and stanchions shall be 1¼ inches to 1½ inches or provide an equivalent gripping surface and shall provide a minimum 1½

inches knuckle clearance from the nearest adjacent surface.

§ 38.59 Floor surfaces.

Floor surfaces on aisles, places for standees, and areas where wheelchair and mobility aid users are to be accommodated shall be slip-resistant.

§ 38.61 Public information system.

(a)(1) *Requirements.* Each vehicle shall be equipped with a public address system permitting transportation system personnel, or recorded or digitized human speech messages, to announce stations and provide other passenger information. Alternative systems or devices which provide equivalent access are also permitted. Each vehicle operating in stations having more than one line or route shall have an external public address system to permit transportation system personnel, or recorded or digitized human speech messages, to announce train, route, or line identification information.

(2) *Exception.* Where station announcement systems provide information on arriving trains, an external train speaker is not required.

(b) [Reserved]

§ 38.63 Between-car barriers.

(a) *Requirement.* Suitable devices or systems shall be provided to prevent, deter or warn individuals from inadvertently stepping off the platform between cars. Acceptable solutions include, but are not limited to, pantograph gates, chains, motion detectors or similar devices.

(b) *Exception.* Between-car barriers are not required where platform screens are provided which close off the platform edge and open only when trains are correctly aligned with the doors.

Subpart D—Light Rail Vehicles and Systems

§ 38.71 General.

(a) New, used and remanufactured light rail vehicles, to be considered accessible by regulations in part 37 of this title shall comply with this subpart.

(b)(1) Vehicles intended to be operated solely in light rail systems confined entirely to a dedicated right-of-way, and for which all stations or stops are designed and constructed for revenue service after the effective date of standards for design and construction in §37.21 and § 37.23 of this title shall provide level boarding and shall comply with § 38.73(d)(1) and § 38.85 of this part.

(2) Vehicles designed for, and operated on, pedestrian malls, city streets, or other areas where level boarding is not practicable shall provide wayside or car-borne lifts, mini-high platforms, or other means of access in compliance with § 38.83 (b) or (c) of this part.

(c) If portions of the vehicle are modified in a way that affects or could affect accessibility, each such portion shall comply, to the extent practicable, with the applicable provisions of this subpart. This provision does not require that inaccessible vehicles be retrofitted with lifts, ramps or other boarding devices.

(d) Existing vehicles retrofitted to comply with the ''one-car-per-train rule'' at § 37.93 of this title shall comply with § 38.75, § 38.77(c), § 38.79(a) and § 38.83(a) of this part and shall have, in new and key stations, at least one door which complies with §§ 38.73 (a)(1), (b) and (d) of this part. Vehicles previously designed and manufactured in accordance with the accessibility requirements of part 609 of this title or the Secretary of Transportation regulations implementing section 504 of the Rehabilitation Act of 1973 that were in effect before October 7, 1991, and which can be entered and used from stations in which they are to be operated, may be used to satisfy the requirements of § 37.93 of this title.

§ 38.73 Doorways.

(a) *Clear width*—(1) All passenger doorways on vehicle sides shall have minimum clear openings of 32 inches when open.

(2) If doorways connecting adjoining cars in a multi-car train are provided, and if such doorway is connected by an aisle with a minimum clear width of 30 inches to one or more spaces where wheelchair or mobility aid users can be accommodated, then such doorway

shall have a minimum clear opening of 30 inches to permit wheelchair and mobility aid users to be evacuated to an adjoining vehicle in an emergency.

(b) *Signage.* The International Symbol of Accessibility shall be displayed on the exterior of each vehicle operating on an accessible light rail system unless all vehicles are accessible and are not marked by the access symbol (see fig. 6).

(c) *Signals.* Auditory and visual warning signals shall be provided to alert passengers of closing doors.

(d) *Coordination with boarding platform*—(1) *Requirements.* The design of level-entry vehicles shall be coordinated with the boarding platform or mini-high platform design so that the horizontal gap between a vehicle at rest and the platform shall be no greater than 3 inches and the height of the vehicle floor shall be within plus or minus ⅝ inch of the platform height. Vertical alignment may be accomplished by vehicle air suspension, automatic ramps or lifts, or any combination.

(2) *Exception.* New vehicles operating in existing stations may have a floor height within plus or minus 1½ inches of the platform height. At key stations, the horizontal gap between at least one door of each such vehicle and the platform shall be no greater than 3 inches.

(3) *Exception.* Retrofitted vehicles shall be coordinated with the platform in new and key stations such that the horizontal gap shall be no greater than 4 inches and the height of the vehicle floor, under 50% passenger load, shall be within plus or minus 2 inches of the platform height.

(4) *Exception.* Where it is not operationally or structurally practicable to meet the horizontal or vertical requirements of paragraphs (d) (1), (2) or (3) of this section, platform or vehicle devices complying with §38.83(b) or platform or vehicle mounted ramps or bridge plates complying with §38.83(c) shall be provided.

§38.75 Priority seating signs.

(a) Each vehicle shall contain sign(s) which indicate that certain seats are priority seats for persons with disabilities, and that other passengers should make such seats available to those who wish to use them.

(b) Where designated wheelchair or mobility aid seating locations are provided, signs shall indicate the location and advise other passengers of the need to permit wheelchair and mobility aid users to occupy them.

(c) Characters on signs required by paragraphs (a) or (b) of this section shall have a width-to-height ratio between 3:5 and 1:1 and a stroke width-to-height ratio between 1:5 and 1:10, with a minimum character height (using an upper case ''X'') of ⅝ inch, with ''wide'' spacing (generally, the space between letters shall be 1/16 the height of upper case letters), and shall contrast with the background, either light-on-dark or dark-on-light.

§38.77 Interior circulation, handrails and stanchions.

(a) Handrails and stanchions shall be sufficient to permit safe boarding, on-board circulation, seating and standing assistance, and alighting by persons with disabilities.

(b) At entrances equipped with steps, handrails and stanchions shall be provided in the entrance to the vehicle in a configuration which allows passengers to grasp such assists from outside the vehicle while starting to board, and to continue using such handrails or stanchions throughout the boarding process. Handrails shall have a cross-sectional diameter between 1¼ inches and 1½ inches or shall provide an equivalent grasping surface, and have eased edges with corner radii of not less than ⅛ inch. Handrails shall be placed to provide a minimum 1½ inches knuckle clearance from the nearest adjacent surface. Where on-board fare collection devices are used, a horizontal passenger assist shall be located between boarding passengers and the fare collection device and shall prevent passengers from sustaining injuries on the fare collection device or windshield in the event of a sudden deceleration. Without restricting the vestibule space, the assist shall provide support for a boarding passenger from the door through the boarding procedure. Passengers shall be able to lean against the assist for security while paying fares.

(c) At all doors on level-entry vehicles, and at each entrance accessible by lift, ramp, bridge plate or other suitable means, handrails, stanchions, passenger seats, vehicle driver seat platforms, and fare boxes, if applicable, shall be located so as to allow a route at least 32 inches wide so that at least two wheelchair or mobility aid users can enter the vehicle and position the wheelchairs or mobility aids in areas, each having a minimum clear space of 48 inches by 30 inches, which do not unduly restrict movement of other passengers. Space to accommodate wheelchairs and mobility aids may be provided within the normal area used by standees and designation of specific spaces is not required. Particular attention shall be given to ensuring maximum maneuverability immediately inside doors. Ample vertical stanchions from ceiling to seat-back rails shall be provided. Vertical stanchions from ceiling to floor shall not interfere with wheelchair or mobility aid circulation and shall be kept to a minimum in the vicinity of accessible doors.

§ 38.79 Floors, steps and thresholds.

(a) Floor surfaces on aisles, step treads, places for standees, and areas where wheelchair and mobility aid users are to be accommodated shall be slip-resistant.

(b) All thresholds and step edges shall have a band of color(s) running the full width of the step or threshold which contrasts from the step tread and riser or adjacent floor, either light-on-dark or dark-on-light.

§ 38.81 Lighting.

(a) Any stepwell or doorway with a lift, ramp or bridge plate immediately adjacent to the driver shall have, when the door is open, at least 2 foot-candles of illumination measured on the step tread or lift platform.

(b) Other stepwells, and doorways with lifts, ramps or bridge plates, shall have, at all times, at least 2 foot-candles of illumination measured on the step tread or lift or ramp, when deployed at the vehicle floor level.

(c) The doorways of vehicles not operating at lighted station platforms shall have outside lights which provide at least 1 foot-candle of illumination on the station platform or street surface for a distance of 3 feet perpendicular to all points on the bottom step tread. Such lights shall be located below window level and shielded to protect the eyes of entering and exiting passengers.

§ 38.83 Mobility aid accessibility.

(a)(1) *General.* All new light rail vehicles, other than level entry vehicles, covered by this subpart shall provide a level-change mechanism or boarding device (e.g., lift, ramp or bridge plate) complying with either paragraph (b) or (c) of this section and sufficient clearances to permit at least two wheelchair or mobility aid users to reach areas, each with a minimum clear floor space of 48 inches by 30 inches, which do not unduly restrict passenger flow. Space to accommodate wheelchairs and mobility aids may be provided within the normal area used by standees and designation of specific spaces is not required.

(2) *Exception.* If lifts, ramps or bridge plates meeting the requirements of this section are provided on station platforms or other stops required to be accessible, or mini-high platforms complying with § 38.73(d) of this part are provided, the vehicle is not required to be equipped with a car-borne device. Where each new vehicle is compatible with a single platform-mounted access system or device, additional systems or devices are not required for each vehicle provided that the single device could be used to provide access to each new vehicle if passengers using wheelchairs or mobility aids could not be accommodated on a single vehicle.

(b) *Vehicle lift*—(1) *Design load.* The design load of the lift shall be at least 600 pounds. Working parts, such as cables, pulleys, and shafts, which can be expected to wear, and upon which the lift depends for support of the load, shall have a safety factor of at least six, based on the ultimate strength of the material. Nonworking parts, such as platform, frame, and attachment hardware which would not be expected to wear, shall have a safety factor of at least three, based on the ultimate strength of the material.

(2) *Controls*—(i) *Requirements.* The controls shall be interlocked with the

vehicle brakes, propulsion system, or door, or shall provide other appropriate mechanisms or systems, to ensure that the vehicle cannot be moved when the lift is not stowed and so the lift cannot be deployed unless the interlocks or systems are engaged. The lift shall deploy to all levels (i.e., ground, curb, and intermediate positions) normally encountered in the operating environment. Where provided, each control for deploying, lowering, raising, and stowing the lift and lowering the roll-off barrier shall be of a momentary contact type requiring continuous manual pressure by the operator and shall not allow improper lift sequencing when the lift platform is occupied. The controls shall allow reversal of the lift operation sequence, such as raising or lowering a platform that is part way down, without allowing an occupied platform to fold or retract into the stowed position.

(ii) *Exception*. Where physical or safety constraints prevent the deployment at some stops of a lift having its long dimension perpendicular to the vehicle axis, the transportation entity may specify a lift which is designed to deploy with its long dimension parallel to the vehicle axis and which pivots into or out of the vehicle while occupied (i.e., ''rotary lift''). The requirements of paragraph (b)(2)(i) of this section prohibiting the lift from being stowed while occupied shall not apply to a lift design of this type if the stowed position is within the passenger compartment and the lift is intended to be stowed while occupied.

(iii) *Exception*. The brake or propulsion system interlocks requirement does not apply to a station platform mounted lift provided that a mechanical, electrical or other system operates to ensure that vehicles do not move when the lift is in use.

(3) *Emergency operation*. The lift shall incorporate an emergency method of deploying, lowering to ground level with a lift occupant, and raising and stowing the empty lift if the power to the lift fails. No emergency method, manual or otherwise, shall be capable of being operated in a manner that could be hazardous to the lift occupant or to the operator when operated according to manufacturer's instructions, and shall not permit the platform to be stowed or folded when occupied, unless the lift is a rotary lift intended to be stowed while occupied.

(4) *Power or equipment failure*. Lift platforms stowed in a vertical position, and deployed platforms when occupied, shall have provisions to prevent their deploying, falling, or folding any faster than 12 inches/second or their dropping of an occupant in the event of a single failure of any load carrying component.

(5) *Platform barriers*. The lift platform shall be equipped with barriers to prevent any of the wheels of a wheelchair or mobility aid from rolling off the lift during its operation. A movable barrier or inherent design feature shall prevent a wheelchair or mobility aid from rolling off the edge closest to the vehicle until the lift is in its fully raised position. Each side of the lift platform which extends beyond the vehicle in its raised position shall have a barrier a minimum 1½ inches high. Such barriers shall not interfere with maneuvering into or out of the aisle. The loading-edge barrier (outer barrier) which functions as a loading ramp when the lift is at ground level, shall be sufficient when raised or closed, or a supplementary system shall be provided, to prevent a power wheelchair or mobility aid from riding over or defeating it. The outer barrier on the outboard of the lift shall automatically rise or close, or a supplementary system shall automatically engage, and remain raised, closed, or engaged at all times that the lift is more than 3 inches above the station platform or roadway and the lift is occupied. Alternatively, a barrier or system may be raised, lowered, opened, closed, engaged or disengaged by the lift operator provided an interlock or inherent design feature prevents the lift from rising unless the barrier is raised or closed or the supplementary system is engaged.

(6) *Platform surface*. The lift platform surface shall be free of any protrusions over ¼ inch high and shall be slip resistant. The lift platform shall have a minimum clear width of 28½ inches at the platform, a minimum clear width of 30 inches measured from 2 inches above the lift platform surface to 30

inches above the surface, and a minimum clear length of 48 inches measured from 2 inches above the surface of the platform to 30 inches above the surface. (See Fig. 1)

(7) *Platform gaps.* Any openings between the lift platform surface and the raised barriers shall not exceed ⅝ inch wide. When the lift is at vehicle floor height with the inner barrier (if applicable) down or retracted, gaps between the forward lift platform edge and vehicle floor shall not exceed ½ inch horizontally and ⅝ inch vertically. Platforms on semi-automatic lifts may have a hand hold not exceeding 1½ inches by 4½ inches located between the edge barriers.

(8) *Platform entrance ramp.* The entrance ramp, or loading-edge barrier used as a ramp, shall not exceed a slope of 1:8 measured on level ground, for a maximum rise of 3 inches, and the transition from the station platform or roadway to ramp may be vertical without edge treatment up to ¼ inch. Thresholds between ¼ inch and ½ inch high shall be beveled with a slope no greater than 1:2.

(9) *Platform deflection.* The lift platform (not including the entrance ramp) shall not deflect more than 3 degrees (exclusive of vehicle roll) in any direction between its unloaded position and its position when loaded with 600 pounds applied through a 26 inch by 26 inch test pallet at the centroid of the lift platform.

(10) *Platform movement.* No part of the platform shall move at a rate exceeding 6 inches/second during lowering and lifting an occupant, and shall not exceed 12 inches/second during deploying or stowing. This requirement does not apply to the deployment or stowage cycles of lifts that are manually deployed or stowed. The maximum platform horizontal and vertical acceleration when occupied shall be 0.3g.

(11) *Boarding direction.* The lift shall permit both inboard and outboard facing of wheelchairs and mobility aids.

(12) *Use by standees.* Lifts shall accommodate persons using walkers, crutches, canes or braces or who otherwise have difficulty using steps. The lift may be marked to indicate a preferred standing position.

(13) *Handrails.* Platforms on lifts shall be equipped with handrails, on two sides, which move in tandem with the lift which shall be graspable and provide support to standees throughout the entire lift operation. Handrails shall have a usable component at least 8 inches long with the lowest portion a minimum 30 inches above the platform and the highest portion a maximum 38 inches above the platform. The handrails shall be capable of withstanding a force of 100 pounds concentrated at any point on the handrail without permanent deformation of the rail or its supporting structure. Handrails shall have a cross-sectional diameter between 1¼ inches and 1½ inches or shall provide an equivalent grasping surface, and have eased edges with corner radii of not less than ⅛ inch. Handrails shall be placed to provide a minimum 1½ inches knuckle clearance from the nearest adjacent surface. Handrails shall not interfere with wheelchair or mobility aid maneuverability when entering or leaving the vehicle.

(c) *Vehicle ramp or bridge plate.*—(1) *Design load.* Ramps or bridge plates 30 inches or longer shall support a load of 600 pounds, placed at the centroid of the ramp or bridge plate distributed over an area of 26 inches, with a safety factor of at least 3 based on the ultimate strength of the material. Ramps or bridge plates shorter than 30 inches shall support a load of 300 pounds.

(2) *Ramp surface.* The ramp or bridge plate surface shall be continuous and slip resistant, shall not have protrusions from the surface greater then ¼ inch, shall have a clear width of 30 inches, and shall accommodate both four-wheel and three-wheel mobility aids.

(3) *Ramp threshold.* The transition from roadway or station platform and the transition from vehicle floor to the ramp or bridge plate may be vertical without edge treatment up to ¼ inch. Changes in level between ¼ inch and ½ inch shall be beveled with a slope no greater than 1:2.

(4) *Ramp barriers.* Each side of the ramp or bridge plate shall have barriers at least 2 inches high to prevent mobility aid wheels from slipping off.

(5) *Slope.* Ramps or bridge plates shall have the least slope practicable. If the

height of the vehicle floor, under 50% passenger load, from which the ramp is deployed is 3 inches or less above the station platform a maximum slope of 1:4 is permitted; if the height of the vehicle floor, under 50% passenger load, from which the ramp is deployed is 6 inches or less, but more than 3 inches, above the station platform a maximum slope of 1:6 is permitted; if the height of the vehicle floor, under 50% passenger load, from which the ramp is deployed is 9 inches or less, but more than 6 inches, above the station platform a maximum slope of 1:8 is permitted; if the height of the vehicle floor, under 50% passenger load, from which the ramp is deployed is greater than 9 inches above the station platform a slope of 1:12 shall be achieved. Folding or telescoping ramps are permitted provided they meet all structural requirements of this section.

(6) *Attachment*—(i) *Requirement*. When in use for boarding or alighting, the ramp or bridge plate shall be attached to the vehicle, or otherwise prevented from moving such that it is not subject to displacement when loading or unloading a heavy power mobility aid and that any gaps between vehicle and ramp or bridge plate, and station platform and ramp or bridge plate, shall not exceed ⅝ inch.

(ii) *Exception*. Ramps or bridge plates which are attached to, and deployed from, station platforms are permitted in lieu of vehicle devices provided they meet the displacement requirements of paragraph (c)(6)(i) of this section.

(7) *Stowage*. A compartment, securement system, or other appropriate method shall be provided to ensure that stowed ramps or bridge plates, including portable ramps or bridges plates stowed in the passenger area, do not impinge on a passenger's wheelchair or mobility aid or pose any hazard to passengers in the event of a sudden stop.

(8) *Handrails*. If provided, handrails shall allow persons with disabilities to grasp them from outside the vehicle while starting to board, and to continue to use them throughout the boarding process, and shall have the top between 30 inches and 38 inches above the ramp surface. The handrails shall be capable of withstanding a force of 100 pounds concentrated at any point on the handrail without permanent deformation of the rail or its supporting structure. The handrail shall have a cross- sectional diameter between 1¼ inches and 1½ inches or shall provide an equivalent grasping surface, and have ''eased'' edges with corner radii of not less than ⅛ inch. Handrails shall not interfere with wheelchair or mobility aid maneuverability when entering or leaving the vehicle.

§ 38.85 Between-car barriers.

Where vehicles operate in a high-platform, level-boarding mode, devices or systems shall be provided to prevent, deter or warn individuals from inadvertently stepping off the platform between cars. Appropriate devices include, but are not limited to, pantograph gates, chains, motion detectors or other suitable devices.

§ 38.87 Public information system.

(a) Each vehicle shall be equipped with an interior public address system permitting transportation system personnel, or recorded or digitized human speech messages, to announce stations and provide other passenger information. Alternative systems or devices which provide equivalent access are also permitted.

(b) [Reserved]

Subpart E—Commuter Rail Cars and Systems

§ 38.91 General.

(a) New, used and remanufactured commuter rail cars, to be considered accessible by regulations in part 37 of this title, shall comply with this subpart.

(b) If portions of the car are modified in such a way that it affects or could affect accessibility, each such portion shall comply, to the extent practicable, with the applicable provisions of this subpart. This provision does not require that inaccessible cars be retrofitted with lifts, ramps or other boarding devices.

(c)(1) Commuter rail cars shall comply with §§ 38.93(d) and 38.109 of this part for level boarding wherever structurally and operationally practicable.

(2) Where level boarding is not structurally or operationally practicable, commuter rail cars shall comply § 38.95 of this part.

(d) Existing vehicles retrofitted to comply with the ''one-car-per-train rule'' at § 37.93 of this title shall comply with §§ 38.93(e), 38.95(a) and 38.107 of this part and shall have, in new and key stations at least one door on each side from which passengers board which complies with § 38.93(d) of this part. Vehicles previously designed and manufactured in accordance with the program accessibility requirements of section 504 of the Rehabilitation Act of 1973, or implementing regulations of the Secretary of Transportation that were in effect before October 7, 1991; and which can be entered and used from stations in which they are to be operated, may be used to satisfy the requirements of § 37.93 of this title.

§ 38.93 Doorways.

(a) *Clear width.* (1) At least one door on each side of the car from which passengers board opening onto station platforms and at least one adjacent doorway into the passenger coach compartment, if provided, shall have a minimum clear opening of 32 inches.

(2) If doorways connecting adjoining cars in a multi-car train are provided, and if such doorway is connected by an aisle with a minimum clear width of 30 inches to one or more spaces where wheelchair or mobility aid users can be accommodated, then such doorway shall have, to the maximum extent practicable in accordance with the regulations issued under the Federal Railroad Safety Act of 1970 (49 CFR parts 229 and 231), a clear opening of 30 inches.

(b) *Passageways.* A route at least 32 inches wide shall be provided from doors required to be accessible by paragraph (a)(1) of this section to seating locations complying with § 38.95(d) of this part. In cars where such doorways require passage through a vestibule, such vestibule shall have a minimum width of 42 inches. (See Fig. 3.)

(c) *Signals.* If doors to the platform close automatically or from a remote location, auditory and visual warning signals shall be provided to alert passengers or closing doors.

(d) *Coordination with boarding platform*—(1) *Requirements.* Cars operating in stations with high platforms, or mini-high platforms, shall be coordinated with the boarding platform design such that the horizontal gap between a car at rest and the platform shall be no greater than 3 inches and the height of the car floor shall be within plus or minus ⅝ inch of the platform height. Vertical alignment may be accomplished by car air suspension, platform lifts or other devices, or any combination.

(2) *Exception.* New vehicles operating in existing stations may have a floor height within plus or minus 1½ inches of the platform height. At key stations, the horizontal gap between at least one accessible door of each such vehicle and the platform shall be no greater than 3 inches.

(3) *Exception.* Where platform setbacks do not allow the horizontal gap or vertical alignment specified in paragraph (d)(1) or (d)(2) of this section, car, platform or portable lifts complying with § 38.95(b) of this part, or car or platform ramps or bridge plates, complying with § 38.95(c) of this part, shall be provided.

(4) *Exception.* Retrofitted vehicles shall be coordinated with the platform in new and key stations such that the horizontal gap shall be no greater than 4 inches and the height of the vehicle floor, under 50% passenger load, shall be within plus or minus 2 inches of the platform height.

(e) *Signage.* The International Symbol of Accessibility shall be displaced on the exterior of all doors complying with this section unless all cars are accessible and are not marked by the access symbol (see Fig. 6). Appropriate signage shall also indicate which accessible doors are adjacent to an accessible restroom, if applicable.

§ 38.95 Mobility aid accessibility.

(a)(1) *General.* All new commuter rail cars, other than level entry cars, covered by this subpart shall provide a level-change mechanism or boarding device (e.g., lift, ramp or bridge plate) complying with either paragraph (b) or (c) of this section; sufficient clearances to permit a wheelchair or mobility aid user to reach a seating location; and at

least two wheelchair or mobility aid seating locations complying with paragraph (d) of this section.

(2) *Exception.* If portable or platform lifts, ramps or bridge plates meeting the applicable requirements of this section are provided on station platforms or other stops required to be accessible, or mini-high platforms complying with §38.93(d) are provided, the car is not required to be equipped with a car-borne device. Where each new car is compatible with a single platform-mounted access system or device, additional systems or devices are not required for each car provided that the single device could be used to provide access to each new car if passengers using wheelchairs or mobility aids could not be accommodated on a single car.

(b) *Car Lift*—(1) *Design load.* The design load of the lift shall be at least 600 pounds. Working parts, such as cables, pulleys, and shafts, which can be expected to wear, and upon which the lift depends for support of the load, shall have a safety factor of at least six, based on the ultimate strength of the material. Nonworking parts, such as platform, frame, and attachment hardware which would not be expected to wear, shall have a safety factor of at least three, based on the ultimate strength of the material.

(2) *Controls*—(i) *Requirements.* The controls shall be interlocked with the car brakes, propulsion system, or door, or shall provide other appropriate mechanisms or systems, to ensure that the car cannot be moved when the lift is not stowed and so the lift cannot be deployed unless the interlocks or systems are engaged. The lift shall deploy to all platform levels normally encountered in the operating environment. Where provided, each control for deploying, lowering, raising, and stowing the lift and lowering the roll-off barrier shall be of a monetary contact type requiring continuous manual pressure by the operator and shall not allow improper lift sequencing when the lift platform is occupied. The controls shall allow reversal of the lift operation sequence, such as raising or lowering a platform that is part way down, without allowing an occupied platform to fold or retract into the stowed position.

(ii) *Exception.* Where physical or safety constraints prevent the deployment at some stops of a lift having its long dimension perpendicular to the car axis, the transportation entity may specify a lift which is designed to deploy with its long dimension parallel to the car axis and which pivots into or out of the car while occupied (i.e., ''rotary lift''). The requirements of paragraph (b)(2)(i) of this section prohibiting the lift from being stowed while occupied shall not apply to a lift design of this type if the stowed position is within the passenger compartment and the lift is intended to be stowed while occupied.

(iii) *Exception.* The brake or propulsion system interlock requirement does not apply to a platform mounted or portable lift provided that a mechanical, electrical or other system operates to ensure that cars do not move when the lift is in use.

(3) *Emergency operation.* The lift shall incorporate an emergency method of deploying, lowering to ground or platform level with a lift occupant, and raising and stowing the empty lift if the power to the lift fails. No emergency method, manual or otherwise, shall be capable of being operated in a manner that could be hazardous to the lift occupant or to the operator when operated according to manufacturer's instructions, and shall not permit the platform to be stowed or folded when occupied, unless the lift is a rotary lift intended to be stowed while occupied.

(4) *Power or equipment failure.* Platforms stowed in a vertical position, and deployed platforms when occupied, shall have provisions to prevent their deploying, falling, or folding any faster than 12 inches/second or their dropping of an occupant in the event of a single failure of any load carrying component.

(5) *Platform barriers.* The lift platform shall be equipped with barriers to prevent any of the wheels of a wheelchair or mobility aid from rolling off the lift during its operation. A movable barrier or inherent design feature shall prevent a wheelchair or mobility aid from rolling off the edge closest to the car until the lift is in its fully raised position. Each side of the lift platform which, in its raised position, extends

beyond the car shall have a barrier a minimum 1½ inches high. Such barriers shall not interfere with maneuvering into or out of the car. The loading-edge barrier (outer barrier) which functions as a loading ramp when the lift is at ground or station platform level, shall be sufficient when raised or closed, or a supplementary system shall be provided, to prevent a power wheelchair or mobility aid from riding over or defeating it. The outer barrier of the lift shall automatically rise or close, or a supplementary system shall automatically engage, and remain raised, closed, or engaged at all times that the lift platform is more than 3 inches above the station platform and the lift is occupied. Alternatively, a barrier or system may be raised, lowered, opened, closed, engaged or disengaged by the lift operator provided an interlock or inherent design feature prevents the lift from rising unless the barrier is raised or closed or the supplementary system is engaged.

(6) *Platform surface.* The lift platform surface shall be free of any protrusions over ¼ inch high and shall be slip resistant. The lift platform shall have a minimum clear width of 28½ inches at the platform, a minimum clear width of 30 inches measured from 2 inches above the lift platform surface to 30 inches above the surface, and a minimum clear length of 48 inches measured from 2 inches above the surface of the platform to 30 inches above the surface. (See Fig. 1)

(7) *Platform gaps.* Any openings between the lift platform surface and the raised barriers shall not exceed ⅝ inch wide. When the lift is at car floor height with the inner barrier down (if applicable) or retracted, gaps between the forward lift platform edge and car floor shall not exceed ½ inch horizontally and ⅝ inch vertically.

(8) *Platform entrance ramp.* The entrance ramp, or loading-edge barrier used as a ramp, shall not exceed a slope of 1:8, when measured on level ground, for a maximum rise of 3 inches, and the transition from station platform to ramp may be vertical without edge treatment up to ¼ inch. Thresholds between ¼ inch and ½ inch high shall be beveled with a slope no greater than 1:2.

(9) *Platform deflection.* The lift platform (not including the entrance ramp) shall not deflect more than 3 degrees (exclusive of vehicle roll) in any direction between its unloaded position and its position when loaded with 600 pounds applied through a 26 inch by 26 inch test pallet at the centroid of the lift platform.

(10) *Platform movement.* No part of the platform shall move at a rate exceeding 6 inches/second during lowering and lifting an occupant, and shall not exceed 12 inches/second during deploying or stowing. This requirement does not apply to the deployment or stowage cycles of lifts that are manually deployed or stowed. The maximum platform horizontal and vertical acceleration when occupied shall be 0.3g.

(11) *Boarding direction.* The lift shall permit both inboard and outboard facing of wheelchairs and mobility aids.

(12) *Use by standees.* Lifts shall accommodate persons using walkers, crutches, canes or braces or who otherwise have difficulty using steps. The lift may be marked to indicate a preferred standing position.

(13) *Handrails.* Platforms on lifts shall be equipped with handrails, on two sides, which move in tandem with the lift which shall be graspable and provide support to standees throughout the entire lift operation. Handrails shall have a usable component at least 8 inches long with the lowest portion a minimum 30 inches above the platform and the highest portion a maximum 38 inches above the platform. The handrails shall be capable of withstanding a force of 100 pounds concentrated at any point on the handrail without permanent deformation of the rail or its supporting structure. The handrail shall have a cross-sectional diameter between 1¼ inches and 1½ inches or shall provide an equivalent grasping surface, and have eased edges with corner radii of not less than ⅛ inch. Handrails shall be placed to provide a minimum 1½ inches knuckle clearance from the nearest adjacent surface. Handrails shall not interfere with wheelchair or mobility aid maneuverability when entering or leaving the car.

(c) *Car ramp or bridge plate*—(1) *Design load.* Ramps or bridge plates 30 inches or longer shall support a load of 600

pounds, placed at the centroid of the ramp or bridge plate distributed over an area of 26 inches by 26 inches, with a safety factor of at least 3 based on the ultimate strength of the material. Ramps or bridge plates shorter than 30 inches shall support a load of 300 pounds.

(2) *Ramp surface.* The ramp or bridge plate surface shall be continuous and slip resistant, shall not have protrusions from the surface greater than ¼ inch high, shall have a clear width of 30 inches and shall accommodate both four-wheel and three-wheel mobility aids.

(3) *Ramp threshold.* The transition from station platform to the ramp or bridge plate and the transition from car floor to the ramp or bridge plate may be vertical without edge treatment up to ¼ inch. Changes in level between ¼ inch and ½ inch shall be beveled with a slope no greater than 1:2.

(4) *Ramp barriers.* Each side of the ramp or bridge plate shall have barriers at least 2 inches high to prevent mobility aid wheels from slipping off.

(5) *Slope.* Ramps or bridge plates shall have the least slope practicable. If the height of the vehicle floor, under 50% passenger load, from which the ramp is deployed is 3 inches or less above the station platform a maximum slope of 1:4 is permitted; if the height of the vehicle floor, under 50% passenger load, from which the ramp is deployed is 6 inches or less, but more than 3 inches, above the station platform a maximum slope of 1:6 is permitted; if the height of the vehicle floor, under 50% passenger load, from which the ramp is deployed is 9 inches or less, but more than 6 inches, above the station platform a maximum slope of 1:8 is permitted; if the height of the vehicle floor, under 50% passenger load, from which the ramp is deployed is greater than 9 inches above the station platform a slope of 1:12 shall be achieved. Folding or telescoping ramps are permitted provided they meet all structural requirements of this section.

(6) *Attachment*—(i) *Requirement.* When in use for boarding or alighting, the ramp or bridge plate shall be attached to the vehicle, or otherwise prevented from moving such that it is not subject to displacement when loading or unloading a heavy power mobility aid and that any gaps between vehicle and ramp or bridge plate, and station platform and ramp or bridge plate, shall not exceed ⅝ inch.

(ii) *Exception.* Ramps or bridge plates which are attached to, and deployed from, station platforms are permitted in lieu of car devices provided they meet the displacement requirements of paragraph (c)(6)(i) of this section.

(7) *Stowage.* A compartment, securement system, or other appropriate method shall be provided to ensure that stowed ramps or bridge plates, including portable ramps or bridge plates stowed in the passenger area, do not impinge on a passenger's wheelchair or mobility aid or pose any hazard to passengers in the event of a sudden stop.

(8) *Handrails.* If provided, handrails shall allow persons with disabilities to grasp them from outside the car while starting to board, and to continue to use them throughout the boarding process, and shall have the top between 30 inches and 38 inches above the ramp surface. The handrails shall be capable of withstanding a force of 100 pounds concentrated at any point on the handrail without permanent deformation of the rail or its supporting structure. The handrail shall have a cross-sectional diameter between 1¼ inches and 1½ inches or shall provide an equivalent grasping surface, and have eased edges with corner radii of not less than ⅛ inch. Handrails shall not interfere with wheelchair or mobility aid maneuverability when entering or leaving the car.

(d) *Mobility aid seating location.* Spaces for persons who wish to remain in their wheelchairs or mobility aids shall have a minimum clear floor space 48 inches by 30 inches. Such spaces shall adjoin, and may overlap, an accessible path. Not more than 6 inches of the required clear floor space may be accommodated for footrests under another seat provided there is a minimum of 9 inches from the floor to the lowest part of the seat overhanging the space. Seating spaces may have fold-down or removable seats to accommodate other passengers when a wheelchair or mobility aid user is not occupying the area, provided the seats, when folded up, do

not obstruct the clear floor space required. (See Fig. 2.)

§ 38.97 Interior circulation, handrails and stanchions.

(a) Where provided, handrails or stanchions within the passenger compartment shall be placed to permit sufficient turning and maneuvering space for wheelchairs and other mobility aids to reach a seating location, complying with § 38.95(d) of this part, from an accessible entrance. The diameter or width of the gripping surface of interior handrails and stanchions shall be 1¼ inches to 1½ inches or shall provide an equivalent gripping surface. Handrails shall be placed to provide a minimum 1½ inches knuckle clearance from the nearest adjacent surface.

(b) Where provided, handrails or stanchions shall be sufficient to permit safe boarding, on-board circulation, seating and standing assistance, and alighting by persons with disabilities.

(c) At entrances equipped with steps, handrails or stanchions shall be provided in the entrance to the car in a configuration which allows passengers to grasp such assists from outside the car while starting to board, and to continue using such assists throughout the boarding process, to the extent permitted by part 231 of this title.

§ 38.99 Floors, steps and thresholds.

(a) Floor surfaces on aisles, step treads, places for standees, and areas where wheelchair and mobility aid users are to be accommodated shall be slip-resistant.

(b) All thresholds and step edges shall have a band of color(s) running the full width of the step or threshold which contrasts from the step tread and riser or adjacent floor, either light-on-dark or dark-on-light.

§ 38.101 Lighting.

(a) Any stepwell or doorway with a lift, ramp or bridge plate shall have, when the door is open, at least 2 foot-candles of illumination measured on the step tread, ramp, bridge plate, or lift platform.

(b) The doorways of cars not operating at lighted station platforms shall have outside lights which, when the door is open, provide at least 1 foot-candle of illumination on the station platform surface for a distance of 3 feet perpendicular to all points on the bottom step tread edge. Such lights shall be shielded to protect the eyes of entering and exiting passengers.

§ 38.103 Public information system.

(a) Each car shall be equipped with an interior public address system permitting transportation system personnel, or recorded or digitized human speech messages, to announce stations and provide other passenger information. Alternative systems or devices which provide equivalent access are also permitted.

(b) [Reserved]

§ 38.105 Priority seating signs.

(a) Each car shall contain sign(s) which indicate that certain seats are priority seats for persons with disabilities and that other passengers should make such seats available to those who wish to use them.

(b) Characters on signs required by paragraph (a) shall have a width-to-height ratio between 3:5 and 1:1 and a stroke width-to-height ratio between 1:5 and 1:10, with a minimum character height (using an upper case ''X'') of ⅝ inch, with ''wide'' spacing (generally, the space between letters shall be 1/16 the height of upper case letters), and shall contrast with the background either light-on-dark or dark-on-light.

§ 38.107 Restrooms.

(a) If a restroom is provided for the general public, it shall be designed so as to allow a person using a wheelchair or mobility aid to enter and use such restroom as specified in paragraphs (a)(1) through (5) of this section.

(1) The minimum clear floor area shall be 35 inches by 60 inches. Permanently installed fixtures may overlap this area a maximum of 6 inches, if the lowest portion of the fixture is a minimum of 9 inches above the floor, and may overlap a maximum of 19 inches, if the lowest portion of the fixture is a minimum of 29 inches above the floor, provided such fixtures do not interfere with access to the water closet. Fold-down or retractable seats or shelves may overlap the clear floor space at a

lower height provided they can be easily folded up or moved out of the way.

(2) The height of the water closet shall be 17 inches to 19 inches measured to the top of the toilet seat. Seats shall not be sprung to return to a lifted position.

(3) A grab bar at least 24 inches long shall be mounted behind the water closet, and a horizontal grab bar at least 40 inches long shall be mounted on at least one side wall, with one end not more than 12 inches from the back wall, at a height between 33 inches and 36 inches above the floor.

(4) Faucets and flush controls shall be operable with one hand and shall not require tight grasping, pinching, or twisting of the wrist. The force required to activate controls shall be no greater than 5 lbf (22.2 N). Controls for flush valves shall be mounted no more than 44 inches above the floor.

(5) Doorways on the end of the enclosure, opposite the water closet, shall have a minimum clear opening width of 32 inches. Doorways on the side wall shall have a minimum clear opening width of 39 inches. Door latches and hardware shall be operable with one hand and shall not require tight grasping, pinching, or twisting of the wrist.

(b) Restrooms required to be accessible shall be in close proximity to at least one seating location for persons using mobility aids and shall be connected to such a space by an unobstructed path having a minimum width of 32 inches.

§ 38.109 Between-car barriers.

Where vehicles operate in a high-platform, level-boarding mode, and where between-car bellows are not provided, devices or systems shall be provided to prevent, deter or warn individuals from inadvertently stepping off the platform between cars. Appropriate devices include, but are not limited to, pantograph gates, chains, motion detectors or other suitable devices.

Subpart F—Intercity Rail Cars and Systems

§ 38.111 General.

(a) New, used and remanufactured intercity rail cars, to be considered accessible by regulations in part 37 of this title shall comply with this subpart to the extent required for each type of car as specified below.

(1) Single-level rail passenger coaches and food service cars (other than single-level dining cars) shall comply with §§ 38.113 through 38.123 of this part. Compliance with § 38.125 of this part shall be required only to the extent necessary to meet the requirements of paragraph (d) of this section.

(2) Single-level dining and lounge cars shall have at least one connecting doorway complying with § 38.113(a)(2) of this part connected to a car accessible to persons using wheelchairs or mobility aids, and at least one space complying with §§ 38.125(d) (2) and (3) of this part, to provide table service to a person who wishes to remain in his or her wheelchair, and space to fold and store a wheelchair for a person who wishes to transfer to an existing seat.

(3) Bi-level dining cars shall comply with §§ 38.113(a)(2), 38.115(b), 38.117(a), and 38.121 of this part.

(4) Bi-level lounge cars shall have doors on the lower level, on each side of the car from which passengers board, complying with § 38.113, a restroom complying with § 38.123, and at least one space complying with § 38.125(d) (2) and (3) to provide table service to a person who wishes to remain in his or her wheelchair and space to fold and store a wheelchair for a person who wishes to transfer to an existing seat.

(5) Restrooms, complying with § 38.123 shall be provided in single-level rail passenger coaches and food services cars adjacent to the accessible seating locations required by paragraph (d) of this section. Accessible restrooms are required in dining and lounge cars only if restrooms are provided for other passengers.

(6) Sleeper cars shall comply with §§ 38.113 (b) through (d), 38.115 through 38.121, and 38.125, of this part, and have at least one compartment which can be entered and used by a person using a wheelchair or mobility aid and complying with § 38.127 of this part.

(b)(1) If physically and operationally practicable, intercity rail cars shall comply with § 38.113(d) of this part for level boarding.

(2) Where level boarding is not structurally or operationally practicable,

intercity rail cars shall comply with § 38.125.

(c) If portions of the car are modified in a way that it affects or could affect accessibility, each such portion shall comply, to the extent practicable, with the applicable provisions of this subpart. This provision does not require that inaccessible cars be retrofitted with lifts, ramps or other boarding devices.

(d) Passenger coaches or food service cars shall have the number of spaces complying with § 38.125(d)(2) of this part and the number of spaces complying with § 38.125(d)(3) of this part, as required by § 37.91 of this title.

(e) Existing cars retrofitted to meet the seating requirements of § 37.91 of this title shall comply with § 38.113(e), § 38.123, § 38.125(d) of this part and shall have at least one door on each side from which passengers board complying with § 38.113(d) of this part. Existing cars designed and manufactured to be accessible in accordance with the Secretary of Transportation regulations implementing section 504 of the Rehabilitation Act of 1973 that were in effect before October 7, 1991, shall comply with § 38.125(a) of this part.

§ 38.113 Doorways.

(a) *Clear width.* (1) At least one doorway, on each side of the car from which passengers board, of each car required to be accessible by § 38.111(a) and where the spaces required by § 38.111(d) of this part are located, and at least one adjacent doorway into coach passenger compartments shall have a minimum clear opening width of 32 inches.

(2) Doorways at ends of cars connecting two adjacent cars, to the maximum extent practicable in accordance with regulations issued under the Federal Railroad Safety Act of 1970 (49 CFR parts 229 and 231), shall have a clear opening width of 32 inches to permit wheelchair and mobility aid users to enter into a single-level dining car, if available.

(b) *Passageway.* Doorways required to be accessible by paragraph (a) of this section shall permit access by persons using mobility aids and shall have an unobstructed passageway at least 32 inches wide leading to an accessible sleeping compartment complying with § 38.127 of this part or seating locations complying with § 38.125(d) of this part. In cars where such doorways require passage through a vestibule, such vestibule shall have a minimum width of 42 inches. (see Fig. 4)

(c) *Signals.* If doors to the platform close automatically or from a remote location, auditory and visual warning signals shall be provided to alert passengers of closing doors.

(d) *Coordination with boarding platforms.*—(1) *Requirements.* Cars which provide level-boarding in stations with high platforms shall be coordinated with the boarding platform or mini-high platform design such that the horizontal gap between a car at rest and the platform shall be no greater than 3 inches and the height of the car floor shall be within plus or minus ⅝ inch of the platform height. Vertical alignment may be accomplished by car air suspension, platform lifts or other devices, or any combination.

(2) *Exception.* New cars operating in existing stations may have a floor height within plus or minus 1½ inches of the platform height.

(3) *Exception.* Where platform setbacks do not allow the horizontal gap or vertical alignment specified in paragraph (d) (1) or (2), platform or portable lifts complying with § 38.125(b) of this part, or car or platform bridge plates, complying with § 38.125(c) of this part, may be provided.

(4) *Exception.* Retrofitted vehicles shall be coordinated with the platform in existing stations such that the horizontal gap shall be no greater than 4 inches and the height of the vehicle floor, under 50% passenger load, shall be within plus or minus 2 inches of the platform height.

(e) *Signage.* The International Symbol of Accessibility shall be displayed on the exterior of all doors complying with this section unless all cars and doors are accessible and are not marked by the access symbol (see fig. 6). Appropriate signage shall also indicate which accessible doors are adjacent to an accessible restroom, if applicable.

[56 FR 45756, Sept. 6, 1991, as amended at 58 FR 63103, Nov. 30, 1993]

§ 38.115 Interior circulation, handrails and stanchions.

(a) Where provided, handrails or stanchions within the passenger compartment shall be placed to permit sufficient turning and maneuvering space for wheelchairs and other mobility aids to reach a seating location, complying with § 38.125(d) of this part, from an accessible entrance. The diameter or width of the gripping surface of interior handrails and stanchions shall be 1¼ inches to 1½ inches or shall provide an equivalent gripping surface. Handrails shall be placed to provide a minimum 1½ inches knuckle clearance from the nearest adjacent surface.

(b) Where provided, handrails and stanchions shall be sufficient to permit safe boarding, on-board circulation, seating and standing assistance, and alighting by persons with disabilities.

(c) At entrances equipped with steps, handrails or stanchions shall be provided in the entrance to the car in a configuration which allows passengers to grasp such assists from outside the car while starting to board, and to continue using such assists throughout the boarding process, to the extent permitted by part 231 of this title.

§ 38.117 Floors, steps and thresholds.

(a) Floor surfaces on aisles, step treads and areas where wheelchair and mobility aid users are to be accommodated shall be slip-resistant.

(b) All step edges and thresholds shall have a band of color(s) running the full width of the step or threshold which contrasts from the step tread and riser or adjacent floor, either light-on-dark or dark-on-light.

§ 38.119 Lighting.

(a) Any stepwell, or doorway with a lift, ramp or bridge plate, shall have, when the door is open, at least 2 foot-candles of illumination measured on the step tread, ramp, bridge plate or lift platform.

(b) The doorways of cars not operating at lighted station platforms shall have outside lights which, when the door is open, provide at least 1 foot-candle of illumination on the station platform surface for a distance of 3 feet perpendicular to all points on the bottom step tread edge. Such lights shall be shielded to protect the eyes of entering and exiting passengers.

§ 38.121 Public information system.

(a) Each car shall be equipped with a public address system permitting transportation system personnel, or recorded or digitized human speech messages, to announce stations and provide other passenger information. Alternative systems or devices which provide equivalent access are also permitted.

(b) [Reserved]

§ 38.123 Restrooms.

(a) If a restroom is provided for the general public, and an accessible restroom is required by § 38.111 (a) and (e) of this part, it shall be designed so as to allow a person using a wheelchair or mobility aid to enter and use such restroom as specified in paragraphs (a) (1) through (5) of this section.

(1) The minimum clear floor area shall be 35 inches by 60 inches. Permanently installed fixtures may overlap this area a maximum of 6 inches, if the lowest portion of the fixture is a minimum of 9 inches above the floor, and may overlap a maximum of 19 inches, if the lowest portion of the fixture is a minimum of 29 inches above the floor. Fixtures shall not interfere with access to and use of the water closet. Fold-down or retractable seats or shelves may overlap the clear floor space at a lower height provided they can be easily folded up or moved out of the way.

(2) The height of the water closet shall be 17 inches to 19 inches measured to the top of the toilet seat. Seats shall not be sprung to return to a lifted position.

(3) A grab bar at least 24 inches long shall be mounted behind the water closet, and a horizontal grab bar at least 40 inches long shall be mounted on at least one side wall, with one end not more than 12 inches from the back wall, at a height between 33 inches and 36 inches above the floor.

(4) Faucets and flush controls shall be operable with one hand and shall not require tight grasping, pinching, or twisting of the wrist. The force required to activate controls shall be no greater than 5 lbf (22.2 N). Controls for

flush valves shall be mounted no more than 44 inches above the floor.

(5) Doorways on the end of the enclosure, opposite the water closet, shall have a minimum clear opening width of 32 inches. Doorways on the side wall shall have a minimum clear opening width of 39 inches. Door latches and hardware shall be operable with one hand and shall not require tight grasping, pinching, or twisting of the wrist.

(b) Restrooms required to be accessible shall be in close proximity to at least one seating location for persons using mobility aids complying with § 38.125(d) of this part and shall be connected to such a space by an unobstructed path having a minimum width of 32 inches.

§ 38.125 Mobility aid accessibility.

(a)(1) *General.* All intercity rail cars, other than level entry cars, required to be accessible by §§ 38.111 (a) and (e) of this subpart shall provide a level-change mechanism or boarding device (e.g., lift, ramp or bridge plate) complying with either paragraph (b) or (c) of this section and sufficient clearances to permit a wheelchair or other mobility aid user to reach a seating location complying with paragraph (d) of this section.

(2) *Exception.* If portable or platform lifts, ramps or bridge plates meeting the applicable requirements of this section are provided on station platforms or other stops required to be accessible, or mini-high platforms complying with § 38.113(d) are provided, the car is not required to be equipped with a car-borne device.

(b) *Car Lift*—(1) *Design load.* The design load of the lift shall be at least 600 pounds. Working parts, such as cables, pulleys, and shafts, which can be expected to wear, and upon which the lift depends for support of the load, shall have a safety factor of at least six, based on the ultimate strength of the material. Nonworking parts, such as platform, frame, and attachment hardware which would not be expected to wear, shall have a safety factor of at least three, based on the ultimate strength of the material.

(2) *Controls*—(i) *Requirements.* The controls shall be interlocked with the car brakes, propulsion system, or door, or shall provide other appropriate mechanisms or systems, to ensure that the car cannot be moved when the lift is not stowed and so the lift cannot be deployed unless the interlocks or systems are engaged. The lift shall deploy to all platform levels normally encountered in the operating environment. Where provided, each control for deploying, lowering, raising, and stowing the lift and lowering the roll-off barrier shall be of a monetary contact type requiring continuous manual pressure by the operator and shall not allow improper lift sequencing when the lift platform is occupied. The controls shall allow reversal of the lift operation sequence, such as raising or lowering a platform that is part way down, without allowing an occupied platform to fold or retract into the stowed position.

(ii) *Exception.* Where physical or safety constraints prevent the deployment at some stops of a lift having its long dimension perpendicular to the car axis, the transportation entity may specify a lift which is designed to deploy with its long dimension parallel to the car axis and which pivots into or out of the car while occupied (i.e., ''rotary lift''). The requirements of paragraph (b)(2)(i) of this section prohibiting the lift from being stowed while occupied shall not apply to a lift design of this type if the stowed position is within the passenger compartment and the lift is intended to be stowed while occupied.

(iii) *Exception.* The brake or propulsion system interlocks requirement does not apply to platform mounted or portable lifts provided that a mechanical, electrical or other system operates to ensure that cars do not move when the lift is in use.

(3) *Emergency operation.* The lift shall incorporate an emergency method of deploying, lowering to ground or station platform level with a lift occupant, and raising and stowing the empty lift if the power to the lift fails. No emergency method, manual or otherwise, shall be capable of being operated in a manner that could be hazardous to the lift occupant or to the operator when operated according to manufacturer's instructions, and shall not permit the platform to be stowed

or folded when occupied, unless the lift is a rotary lift and is intended to be stowed while occupied.

(4) *Power or equipment failure.* Platforms stowed in a vertical position, and deployed platforms when occupied, shall have provisions to prevent their deploying, falling, or folding any faster than 12 inches/second or their dropping of an occupant in the event of a single failure of any load carrying component.

(5) *Platform barriers.* The lift platform shall be equipped with barriers to prevent any of the wheels of a wheelchair or mobility aid from rolling off the lift during its operation. A movable barrier or inherent design feature shall prevent a wheelchair or mobility aid from rolling off the edge closest to the car until the lift is in its fully raised position. Each side of the lift platform which, in its raised position, extends beyond the car shall have a barrier a minimum 1½ inches high. Such barriers shall not interfere with maneuvering into or out of the car. The loading-edge barrier (outer barrier) which functions as a loading ramp when the lift is at ground or station platform level, shall be sufficient when raised or closed, or a supplementary system shall be provided, to prevent a power wheelchair or mobility aid from riding over or defeating it. The outer barrier of the lift shall automatically rise or close, or a supplementary system shall automatically engage, and remain raised, closed, or engaged at all times that the lift platform is more than 3 inches above the station platform and the lift is occupied. Alternatively, a barrier or system may be raised, lowered, opened, closed, engaged or disengaged by the lift operator provided an interlock or inherent design feature prevents the lift from rising unless the barrier is raised or closed or the supplementary system is engaged.

(6) *Platform surface.* The lift platform surface shall be free of any protrusions over ¼ inch high and shall be slip resistant. The lift platform shall have a minimum clear width of 28½ inches at the platform, a minimum clear width of 30 inches measured from 2 inches above the lift platform surface to 30 inches above the surface, and a minimum clear length of 48 inches measured from 2 inches above the surface of the platform to 30 inches above the surface. (See Fig. 1.)

(7) *Platform gaps.* Any openings between the lift platform surface and the raised barriers shall not exceed ⅝ inch wide. When the lift is at car floor height with the inner barrier (if applicable) down or retracted, gaps between the forward lift platform edge and car floor shall not exceed ½ inch horizontally and ⅝ inch vertically.

(8) *Platform entrance ramp.* The entrance ramp, or loading-edge barrier used as a ramp, shall not exceed a slope of 1:8, when measured on level ground, for a maximum rise of 3 inches, and the transition from station platform to ramp may be vertical without edge treatment up to ¼ inch. Thresholds between ¼ inch and ½ inch high shall be beveled with a slope no greater than 1:2.

(9) *Platform deflection.* The lift platform (not including the entrance ramp) shall not deflect more than 3 degrees (exclusive of car roll) in any direction between its unloaded position and its position when loaded with 600 pounds applied through a 26 inch by 26 inch test pallet at the centroid of the lift platform.

(10) *Platform movement.* No part of the platform shall move at a rate exceeding 6 inches/second during lowering and lifting an occupant, and shall not exceed 12 inches/second during deploying or stowing. This requirement does not apply to the deployment or stowage cycles of lifts that are manually deployed or stowed. The maximum platform horizontal and vertical acceleration when occupied shall be 0.3g.

(11) *Boarding direction.* The lift shall permit both inboard and outboard facing of wheelchairs and mobility aids.

(12) *Use by standees.* Lifts shall accommodate persons using walkers, crutches, canes or braces or who otherwise have difficulty using steps. The lift may be marked to indicate a preferred standing position.

(13) *Handrails.* Platforms on lifts shall be equipped with handrails, on two sides, which move in tandem with the lift, and which shall be graspable and provide support to standees throughout the entire lift operation.

Handrails shall have a usable component at least 8 inches long with the lowest portion a minimum 30 inches above the platform and the highest portion a maximum 38 inches above the platform. The handrails shall be capable of withstanding a force of 100 pounds concentrated at any point on the handrail without permanent deformation of the rail or its supporting structure. The handrail shall have a cross-sectional diameter between 1¼ inches and 1½ inches or shall provide an equivalent grasping surface, and have eased edges with corner radii of not less than ⅛ inch. Handrails shall be placed to provide a minimum 1½ inches knuckle clearance from the nearest adjacent surface. Handrails shall not interfere with wheelchair or mobility aid maneuverability when entering or leaving the car.

(c) *Car ramp or bridge plate*—(1) *Design load.* Ramps or bridge plates 30 inches or longer shall support a load of 600 pounds, placed at the centroid of the ramp or bridge plate distributed over an area of 26 inches by 26 inches, with a safety factor of at least 3 based on the ultimate strength of the material. Ramps or bridge plates shorter than 30 inches shall support a load of 300 pounds.

(2) *Ramp surface.* The ramp or bridge plate surface shall be continuous and slip resistant, shall not have protrusions from the surface greater than ¼ inch high, shall have a clear width of 30 inches and shall accommodate both four-wheel and three-wheel mobility aids.

(3) *Ramp threshold.* The transition from station platform to the ramp or bridge plate and the transition from car floor to the ramp or bridge plate may be vertical without edge treatment up to ¼ inch. Changes in level between ¼ inch and ½ inch shall be beveled with a slope no greater than 1:2.

(4) *Ramp barriers.* Each side of the ramp or bridge plate shall have barriers at least 2 inches high to prevent mobility aid wheels from slipping off.

(5) *Slope.* Ramps or bridge plates shall have the least slope practicable. If the height of the vehicle floor, under 50% passenger load, from which the ramp is deployed is 3 inches or less above the station platform a maximum slope of 1:4 is permitted; if the height of the vehicle floor, under 50% passenger load, from which the ramp is deployed is 6 inches or less, but more than 3 inches, above the station platform a maximum slope of 1:6 is permitted; if the height of the vehicle floor, under 50% passenger load, from which the ramp is deployed is 9 inches or less, but more than 6 inches, above the station platform a maximum slope of 1:8 is permitted; if the height of the vehicle floor, under 50% passenger load, from which the ramp is deployed is greater than 9 inches above the station platform a slope of 1:12 shall be achieved. Folding or telescoping ramps are permitted provided they meet all structural requirements of this section.

(6) *Attachment*—(i) *Requirement.* When in use for boarding or alighting, the ramp or bridge plate shall be attached to the vehicle, or otherwise prevented from moving such that it is not subject to displacement when loading or unloading a heavy power mobility aid and that any gaps between vehicle and ramp or bridge plate, and station platform and ramp or bridge plate, shall not exceed ⅝ inch.

(ii) *Exception.* Ramps or bridge plates which are attached to, and deployed from, station platforms are permitted in lieu of car devices provided they meet the displacement requirements of paragraph (c)(6)(i) of this section.

(7) *Stowage.* A compartment, securement system, or other appropriate method shall be provided to ensure that stowed ramps or bridge plates, including portable ramps or bridge plates stowed in the passenger area, do not impinge on a passenger's wheelchair or mobility aid or pose any hazard to passengers in the event of a sudden stop.

(8) *Handrails.* If provided, handrails shall allow persons with disabilities to grasp them from outside the car while starting to board, and to continue to use them throughout the boarding process, and shall have the top between 30 inches and 38 inches above the ramp surface. The handrails shall be capable of withstanding a force of 100 pounds concentrated at any point on the handrail without permanent deformation of the rail or its supporting structure. The handrail shall have a cross-sectional diameter between 1¼ inches and

1½ inches or shall provide an equivalent grasping surface, and have eased edges with corner radii of not less than ⅛ inch. Handrails shall not interfere with wheelchair or mobility aid maneuverability when entering or leaving the car.

(d) *Seating*—(1) *Requirements.* All intercity rail cars required to be accessible by §§ 38.111 (a) and (e) of this subpart shall provide at least one, but not more than two, mobility aid seating location(s) complying with paragraph (d)(2) of this section; and at least one, but not more than two, seating location(s) complying with paragraph (d)(3) of this section which adjoin or overlap an accessible route with a minimum clear width of 32 inches.

(2) *Wheelchair or mobility aid spaces.* Spaces for persons who wish to remain in their wheelchairs or mobility aids shall have a minimum clear floor space 48 inches by 30 inches. Such spaces shall adjoin, and may overlap, an accessible path. Not more than 6 inches of the required clear floor space may be accommodated for footrests under another seat provided there is a minimum of 9 inches from the floor to the lowest part of the seat overhanging the space. Seating spaces may have fold-down or removable seats to accommodate other passengers when a wheelchair or mobility aid user is not occupying the area, provided the seats, when folded up, do not obstruct the clear floor space provided (See Fig. 2).

(3) *Other spaces.* Spaces for individuals who wish to transfer shall include a regular coach seat or dining car booth or table seat and space to fold and store the passenger's wheelchair.

[56 FR 45756, Sept. 6, 1991, as amended at 58 FR 63103, Nov. 30, 1993]

§ 38.127 Sleeping compartments.

(a) Sleeping compartments required to be accessible shall be designed so as to allow a person using a wheelchair or mobility aid to enter, maneuver within and approach and use each element within such compartment. (See Fig. 5.)

(b) Each accessible compartment shall contain a restroom complying with § 38.123(a) which can be entered directly from such compartment.

(c) Controls and operating mechanisms (e.g., heating and air conditioning controls, lighting controls, call buttons, electrical outlets, etc.) shall be mounted no more than 48 inches, and no less than 15 inches, above the floor and shall have a clear floor area directly in front a minimum of 30 inches by 48 inches. Controls and operating mechanisms shall be operable with one hand and shall not require tight grasping, pinching, or twisting of the wrist.

Subpart G—Over-the-Road Buses and Systems

§ 38.151 General.

(a) New, used and remanufactured over-the-road buses, to be considered accessible by regulations in part 37 of this title, shall comply with this subpart.

(b) Over-the-road buses covered by § 37.7 (c) of this title shall comply with § 38.23 and this subpart.

§ 38.153 Doors, steps and thresholds.

(a) Floor surfaces on aisles, step treads and areas where wheelchair and mobility aid users are to be accommodated shall be slip-resistant.

(b) All step edges shall have a band of color(s) running the full width of the step which contrasts from the step tread and riser, either dark-on-light or light-on-dark.

(c)(1) Doors shall have a minimum clear width when open of 30 inches (760 mm), measured from the lowest step to a height of at least 48 inches (1220 mm), from which point they may taper to a minimum width of 18 inches (457 mm). The clear width may be reduced by a maximum of 4 inches (100 mm) by protrusions of hinges or other operating mechanisms.

(2) *Exception.* Where compliance with the door width requirement of paragraph (c)(1) of this section is not feasible, the minimum door width shall be 27 in (685 mm).

(d) The overhead clearance between the top of the lift door opening and the sill shall be the maximum practicable but not less than 65 inches (1651 mm).

[56 FR 45756, Sept. 6, 1991, as amended at 63 FR 51698, 51702, Sept. 28, 1998]

§ 38.155 Interior circulation, handrails and stanchions.

(a) Handrails and stanchions shall be provided in the entrance to the vehicle in a configuration which allows passengers to grasp such assists from outside the vehicle while starting to board, and to continue using such handrails or stanchions throughout the boarding process. Handrails shall have a cross-sectional diameter between 1¼ inches and 1½ inches or shall provide an equivalent grasping surface, and have eased edges with corner radii of not less than ⅛ inch. Handrails shall be placed to provide a minimum 1½ inches knuckle clearance from the nearest adjacent surface. Where on-board fare collection devices are used, a horizontal passenger assist shall be located between boarding passengers and the fare collection device and shall prevent passengers from sustaining injuries on the fare collection device or windshield in the event of a sudden deceleration. Without restricting the vestibule space, the assist shall provide support for a boarding passenger from the door through the boarding procedure. Passengers shall be able to lean against the assist for security while paying fares.

(b) Where provided within passenger compartments, handrails or stanchions shall be sufficient to permit safe on-board circulation, seating and standing assistance, and alighting by persons with disabilities.

§ 38.157 Lighting.

(a) Any stepwell or doorway immediately adjacent to the driver shall have, when the door is open, at least 2 foot-candles of illumination measured on the step tread.

(b) The vehicle doorway shall have outside light(s) which, when the door is open, provide at least 1 foot-candle of illumination on the pathway to the door for a distance of 3 feet (915 mm) to the bottom step tread or lift outer edge. Such light(s) shall be shielded to protect the eyes of entering and exiting passengers.

[56 FR 45756, Sept. 6, 1991, as amended at 63 FR 51698, 51702, Sept. 28, 1998]

§ 38.159 Mobility aid accessibility.

(a)(1) *General.* All vehicles covered by this subpart shall provide a level-change mechanism or boarding device (e.g., lift or ramp) complying with paragraph (b) or (c) of this section and sufficient clearances to permit a wheelchair or other mobility aid user to reach a securement location. At least two securement locations and devices, complying with paragraph (d) of this section, shall be provided.

(2) *Exception.* If portable or station-based lifts, ramps or bridge plates meeting the applicable requirements of this section are provided at stations or other stops required to be accessible under regulations issued by the Department of Transportation, the bus is not required to be equipped with a vehicle-borne device.

(b) *Vehicle lift*—(1) *Design load.* The design load of the lift shall be at least 600 pounds (2665 N). Working parts, such as cables, pulleys, and shafts, which can be expected to wear, and upon which the lift depends for support of the load, shall have a safety factor of at least six, based on the ultimate strength of the material. Nonworking parts, such as platform, frame and attachment hardware which would not be expected to wear, shall have a safety factor of at least three, based on the ultimate strength of the material.

(2) *Controls*—(i) *Requirements.* The controls shall be interlocked with the vehicle brakes, transmission, or door, or shall provide other appropriate mechanisms or systems, to ensure that the vehicle cannot be moved when the lift is not stowed and so the lift cannot be deployed unless the interlocks or systems are engaged. The lift shall deploy to all levels (i.e., ground, curb, and intermediate positions) normally encountered in the operating environment. Where provided, each control for deploying, lowering, raising, and stowing the lift and lowering the roll-off barrier shall be of a momentary contact type requiring continuous manual pressure by the operator and shall not allow improper lift sequencing when the lift platform is occupied. The controls shall allow reversal of the lift operation sequence, such as raising or lowering a platform that is part way down, without allowing an occupied

platform to fold or retract into the stowed position.

(ii) *Exception.* Where the lift is designed to deploy with its long dimension parallel to the vehicle axis and which pivots into or out of the vehicle while occupied (i.e., ''rotary lift''), the requirements of this paragraph (b)(2) prohibiting the lift from being stowed while occupied shall not apply if the stowed position is within the passenger compartment and the lift is intended to be stowed while occupied.

(3) *Emergency operation.* The lift shall incorporate an emergency method of deploying, lowering to ground level with a lift occupant, and raising and stowing the empty lift if the power to the lift fails. No emergency method, manual or otherwise, shall be capable of being operated in a manner that could be hazardous to the lift occupant or to the operator when operated according to manufacturer's instructions, and shall not permit the platform to be stowed or folded when occupied, unless the lift is a rotary lift and is intended to be stowed while occupied.

(4) *Power or equipment failure.* Platforms stowed in a vertical position, and deployed platforms when occupied, shall have provisions to prevent their deploying, falling, or folding any faster than 12 inches/second (305 mm/sec) or their dropping of an occupant in the event of a single failure of any load carrying component.

(5) *Platform barriers.* The lift platform shall be equipped with barriers to prevent any of the wheels of a wheelchair or mobility aid from rolling off the platform during its operation. A movable barrier or inherent design feature shall prevent a wheelchair or mobility aid from rolling off the edge closest to the vehicle until the platform is in its fully raised position. Each side of the lift platform which extends beyond the vehicle in its raised position shall have a barrier a minimum 1½ inches (13 mm) high. Such barriers shall not interfere with maneuvering into or out of the aisle. The loading-edge barrier (outer barrier) which functions as a loading ramp when the lift is at ground level, shall be sufficient when raised or closed, or a supplementary system shall be provided, to prevent a power wheelchair or mobility aid from riding over or defeating it. The outer barrier of the lift shall automatically raise or close, or a supplementary system shall automatically engage, and remain raised, closed, or engaged at all times that the platform is more than 3 inches (75 mm) above the roadway or sidewalk and the platform is occupied. Alternatively, a barrier or system may be raised, lowered, opened, closed, engaged, or disengaged by the lift operator, provided an interlock or inherent design feature prevents the lift from rising unless the barrier is raised or closed or the supplementary system is engaged.

(6) *Platform surface.* The platform surface shall be free of any protrusions of ¼ inch (6.5 mm) high and shall be slip resistant. The platform shall have a minimum clear width of 28½ inches (725 mm) at the platform, a minimum clear width of 30 inches (760 mm) measured from 2 inches (50 mm) above the platform surface to 30 inches (760 mm) above the platform, and a minimum clear length of 48 inches (1220 mm) measured from 2 inches (50 mm) above the surface of the platform to 30 inches (760 mm) above the surface of the platform. (See Figure 1 to this part.)

(7) *Platform gaps.* Any openings between the platform surface and the raised barriers shall not exceed ⅝ inch (16 mm) in width. When the platform is at vehicle floor height with the inner barrier (if applicable) down or retracted, gaps between the forward lift platform edge and the vehicle floor shall not exceed ½ inch (13 mm) horizontally and ⅝ inch (16 mm) vertically. Platforms on semi-automatic lifts may have a hand hold not exceeding 1½ inches (28 mm) by 4½ inches (113 mm) located between the edge barriers.

(8) *Platform entrance ramp.* The entrance ramp, or loading-edge barrier used as a ramp, shall not exceed a slope of 1:8, measured on level ground, for a maximum rise of 3 inches (75 mm), and the transition from roadway or sidewalk to ramp may be vertical without edge treatment up to ¼ inch (6.5 mm) . Thresholds between ¼ inch (6.5 mm) and ½ inch (13 mm) high shall be beveled with a slope no greater than 1:2.

(9) *Platform deflection.* The lift platform (not including the entrance ramp) shall not deflect more than 3 degrees

(exclusive of vehicle roll or pitch) in any direction between its unloaded position and its position when loaded with 600 pounds (2665 N) applied through a 26 inch (660 mm) by 26 inch test pallet at the centroid of the platform.

(10) *Platform movement.* No part of the platform shall move at a rate exceeding 6 inches/second (150 mm/sec) during lowering and lifting an occupant, and shall not exceed 12 inches/second (300 mm/sec) during deploying or stowing. This requirement does not apply to the deployment or stowage cycles of lifts that are manually deployed or stowed. The maximum platform horizontal and vertical acceleration when occupied shall be 0.3g.

(11) *Boarding direction.* The lift shall permit both inboard and outboard facing of wheelchair and mobility aid users.

(12) *Use by standees.* Lifts shall accommodate persons using walkers, crutches, canes or braces or who otherwise have difficulty using steps. The platform may be marked to indicate a preferred standing position.

(13) *Handrails.* Platforms on lifts shall be equipped with handrails on two sides, which move in tandem with the lift, and which shall be graspable and provide support to standees throughout the entire lift operation. Handrails shall have a usable component at least 8 inches (200 mm) long with the lowest portion a minimum 30 inches (760 mm) above the platform and the highest portion a maximum 38 inches (965 mm) above the platform. The handrails shall be capable of withstanding a force of 100 pounds (445 N) concentrated at any point on the handrail without permanent deformation of the rail or its supporting structure. The handrail shall have a cross-sectional diameter between 1¼ inches (32 mm) and 1½ inches (38 mm) or shall provide an equivalent grasping surface, and have eased edges with corner radii of not less than ⅝ inch (3.5 mm). Handrails shall be placed to provide a minimum 1½ inches (38 mm) knuckle clearance from the nearest adjacent surface. Handrails shall not interfere with wheelchair or mobility aid maneuverability when entering or leaving the vehicle.

(c) *Vehicle ramp*—(1) *Design load.* Ramps 30 inches (760 mm) or longer shall support a load of 600 pounds (2665 N), placed at the centroid of the ramp distributed over an area of 26 inches by 26 inches (660 mm by 660 mm), with a safety factor of at least 3 based on the ultimate strength of the material. Ramps shorter than 30 inches (760 mm) shall support a load of 300 pounds (1332 N).

(2) *Ramp surface.* The ramp surface shall be continuous and slip resistant; shall not have protrusions from the surface greater than ¼ inch (6.5 mm) high; shall have a clear width of 30 inches (760 mm); and shall accommodate both four-wheel and three-wheel mobility aids.

(3) *Ramp threshold.* The transition from roadway or sidewalk and the transition from vehicle floor to the ramp may be vertical without edge treatment up to ¼ inch (6.5 mm). Changes in level between ¼ inch (6.5 mm) and ½ inch (13 mm) shall be beveled with a slope no greater than 1:2.

(4) *Ramp barriers.* Each side of the ramp shall have barriers at least 2 inches (50 mm) high to prevent mobility aid wheels from slipping off.

(5) *Slope.* Ramps shall have the least slope practicable and shall not exceed 1:4 when deployed to ground level. If the height of the vehicle floor from which the ramp is deployed is 3 inches (75 mm) or less above a 6 inch (150 mm) curb, a maximum slope of 1:4 is permitted; if the height of the vehicle floor from which the ramp is deployed is 6 inches (150 mm) or less, but greater than 3 inches (75 mm), above a 6 inch (150 mm) curb, a maximum slope of 1:6 is permitted; if the height of the vehicle floor from which the ramp is deployed is 9 inches (225 mm) or less, but greater than 6 inches (150 mm), above a 6 inch curb, a maximum slope of 1:8 is permitted; if the height of the vehicle floor from which the ramp is deployed is greater than 9 inches (225 mm) above a 6 inch (150 mm) curb, a slope of 1:12 shall be achieved. Folding or telescoping ramps are permitted provided they meet all structural requirements of this section.

(6) *Attachment.* When in use for boarding or alighting, the ramp shall be firmly attached to the vehicle so that

it is not subject to displacement when loading or unloading a heavy power mobility aid and that no gap between vehicle and ramp exceeds ⅝ inch (16 mm).

(7) *Stowage.* A compartment, securement system, or other appropriate method shall be provided to ensure that stowed ramps, including portable ramps stowed in the passenger area, do not impinge on a passenger's wheelchair or mobility aid or pose any hazard to passengers in the event of a sudden stop or maneuver.

(8) *Handrails.* If provided, handrails shall allow persons with disabilities to grasp them from outside the vehicle while starting to board, and to continue to use them throughout the boarding process, and shall have the top between 30 inches (760 mm) above the ramp surface. The handrails shall be capable of withstanding a force of 100 pounds (445 N) concentrated at any point on the handrail without permanent deformation of the rail or its supporting structure. The handrail shall have a cross-sectional diameter between 1¼ inches (32 mm) and 1½ inches (38 mm) or shall provide an equivalent grasping surface, and have eased edges with corner radii of not less than ⅛ inch (3.5 mm). Handrails shall not interfere with wheelchair or mobility aid maneuverability when entering or leaving the vehicle.

(d) *Securement devices*—(1) *Design load.* Securement systems, and their attachments to vehicles, shall restrain a force in the forward longitudinal direction of up to 2,000 pounds (8,880 N) per securement leg or clamping mechanism and a minimum of 4,000 pounds (17,760 N) for each mobility aid.

(2) *Location and size.* The securement system shall be placed as near to the accessible entrance as practicable and shall have a clear floor area of 30 inches (760 mm) by 48 inches (1220 mm). Such space shall adjoin, and may overlap, an access path. Not more than 6 inches (150 mm) of the required clear floor space may be accommodated for footrests under another seat, modesty panel, or other fixed element provided there is a minimum of 9 inches (230 mm) from the floor to the lowest part of the seat overhanging the space. Securement areas may have fold-down seats to accommodate other passengers when a wheelchair or mobility aid is not occupying the area, provided the seats, when folded up, do not obstruct the clear floor space required. (See Figure 2 to this part.)

(3) *Mobility aids accommodated.* The securement system shall secure common wheelchairs and mobility aids and shall either be automatic or easily attached by a person familiar with the system and mobility aid and having average dexterity.

(4) *Orientation.* At least one securement device or system required by paragraph (a) of this section shall secure the wheelchair or mobility aid facing toward the front of the vehicle. Additional securement devices or systems shall secure the wheelchair or mobility aid facing forward or rearward. Where the wheelchair or mobility aid is secured facing the rear of the vehicle, a padded barrier shall be provided. The padded barrier shall extend from a height of 38 inches (965 mm) from the vehicle floor to a height of 56 inches (1420 mm) from the vehicle floor with a width of 18 inches (455 mm), laterally centered immediately in back of the seated individual. Such barriers need not be solid provided equivalent protection is afforded.

(5) *Movement.* When the wheelchair or mobility aid is secured in accordance with manufacturer's instructions, the securement system shall limit the movement of an occupied wheelchair or mobility aid to no more than 2 inches (50 mm) in any direction under normal vehicle operating conditions.

(6) *Stowage.* When not being used for securement, or when the securement area can be used by standees, the securement system shall not interfere with passenger movement, shall not present any hazardous condition, shall be reasonably protected from vandalism, and shall be readily accessed when needed for use.

(7) *Seat belt and shoulder harness.* For each wheelchair or mobility aid securement device provided, a passenger seat belt and shoulder harness, complying with all applicable provisions of the Federal Motor Vehicle Safety Standards (49 CFR part 571), shall also be provided for use by wheelchair or mobility aid users. Such seat belts and

shoulder harnesses shall not be used in lieu of a device which secures the wheelchair or mobility aid itself.

[63 FR 51698, 51703, Sept. 28, 1998]

§ 38.161 Moveable aisle armrests.

A minimum of 50% of aisle seats, including all moveable or removable seats at wheelchair or mobility aide securement locations, shall have an armrest on the aisle side which can be raised, removed, or retracted to permit easy entry or exit.

[63 FR 51700, 51703, Sept. 28, 1998]

Subpart H—Other Vehicles and Systems

§ 38.171 General.

(a) New, used and remanufactured vehicles and conveyances for systems not covered by other subparts of this part, to be considered accessible by regulations in part 37 of this title shall comply with this subpart.

(b) If portions of the vehicle or conveyance are modified in a way that affects or could affect accessibility, each such portion shall comply, to the extent practicable, with the applicable provisions of this subpart. This provision does not require that inaccessible vehicles be retrofitted with lifts, ramps or other boarding devices.

(c) Requirements for vehicles and systems not covered by this part shall be determined on a case-by-case basis by the Department of Transportation in consultation with the U.S. Architectural and Transportation Barriers Compliance Board (Access Board).

§ 38.173 Automated guideway transit vehicles and systems.

(a) Automated Guideway Transit (AGT) vehicles and systems, sometimes called ''people movers'', operated in airports and other areas where AGT vehicles travel at slow speed (i.e., at a speed of no more than 20 miles per hour at any location on their route during normal operation), shall comply with the provisions of § 38.53 (a) through (c), and §§ 38.55 through 38.61 of this part for rapid rail vehicles and systems.

(b) Where the vehicle covered by paragraph (a) will operate in an accessible station, the design of vehicles shall be coordinated with the boarding platform design such that the horizontal gap between a vehicle door at rest and the platform shall be no greater than 1 inch and the height of the vehicle floor shall be within plus or minus ½ inch of the platform height under all normal passenger load conditions. Vertical alignment may be accomplished by vehicle air suspension or other suitable means of meeting the requirement.

(c) In stations where open platforms are not protected by platform screens, a suitable device or system shall be provided to prevent, deter or warn individuals from stepping off the platform between cars. Acceptable devices include, but are not limited to, pantograph gates, chains, motion detectors or other appropriate devices.

(d) Light rail and rapid rail AGT vehicles and systems shall comply with subparts D and C of this part, respectively. AGT systems whose vehicles travel at a speed of more than 20 miles per hour at any location on their route during normal operation are covered under this paragraph rather than under paragraph (a) of this section.

[56 FR 45756, Sept. 6, 1991, as amended at 61 FR 25416, May 21, 1996]

§ 38.175 High-speed rail cars, monorails and systems.

(a) All cars for high-speed rail systems, including but not limited to those using ''maglev'' or high speed steel-wheel-on-steel rail technology, and monorail systems operating primarily on dedicated rail (i.e., not used by freight trains) or guideway, in which stations are constructed in accordance with part 37, subpart C of this title, shall be designed for high-platform, level boarding and shall comply with § 38.111(a) of this part for each type of car which is similar to intercity rail, §§ 38.111(d), 38.113 (a) through (c) and (e), 38.115 (a) and (b), 38.117 (a) and (b), 38.121 through 38.123, 38.125(d), and 38.127 (if applicable) of this part. The design of cars shall be coordinated with the boarding platform design such that the horizontal gap between a car door at rest and the platform shall be no greater than 3 inches and the height of the car floor shall be within plus or minus ⅝ inch of the platform height

under all normal passenger load conditions. Vertical alignment may be accomplished by car air suspension or other suitable means of meeting the requirement. All doorways shall have, when the door is open, at least 2 footcandles of illumination measured on the door threshold.

(b) All other high-speed rail cars shall comply with the similar provisions of subpart F of this part.

§ 38.177 Ferries, excursion boats and other vessels. [Reserved]

§ 38.179 Trams, and similar vehicles, and systems

(a) New and used trams consisting of a tractor unit, with or without passenger accommodations, and one or more passenger trailer units, including but not limited to vehicles providing shuttle service to remote parking areas, between hotels and other public accommodations, and between and within amusement parks and other recreation areas, shall comply with this section. For purposes of determining applicability of 49 CFR 37.101, 37.103, or 37.105 the capacity of such a vehicle or ''train'' shall consist of the total combined seating capacity of all units, plus the driver, prior to any modification for accessibility.

(b) Each tractor unit which accommodates passengers and each trailer unit shall comply with § 38.25 and § 38.29 of this part. In addition, each such unit shall comply with § 38.23 (b) or (c) and shall provide at least one space for wheelchair or mobility aid users complying with § 38.23(d) of this part unless the complete operating unit consisting of tractor and one or more trailers can already accommodate at least two wheelchair or mobility aid users.

FIGURES TO PART 38

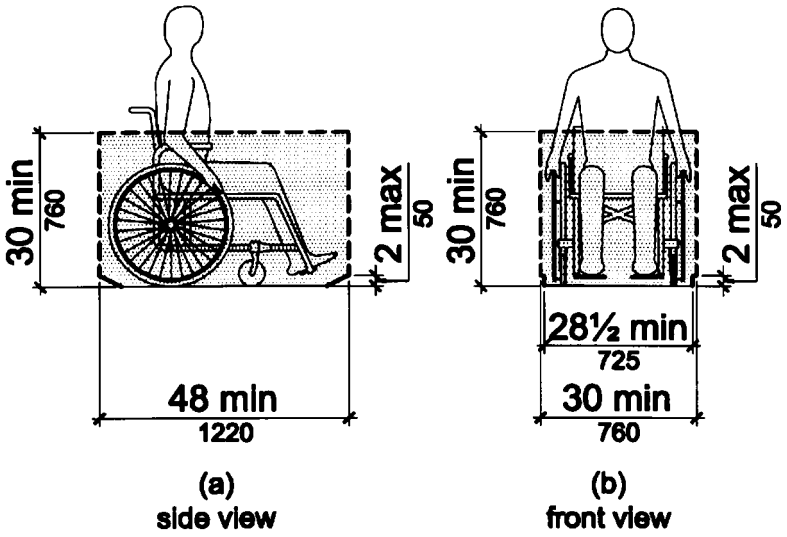

Figure 1
Wheelchair or Mobility Aid Envelope

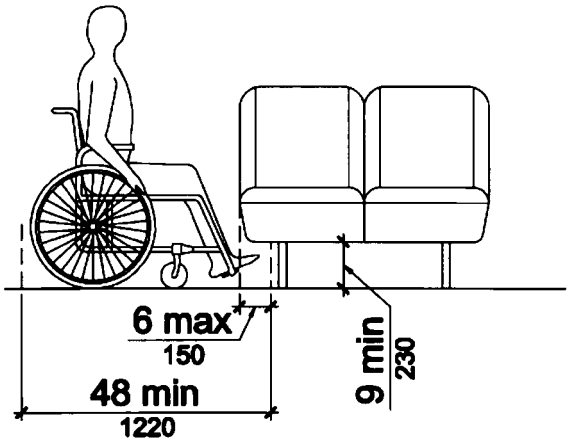

Figure 2
Toe Clearance Under a Fixed Element

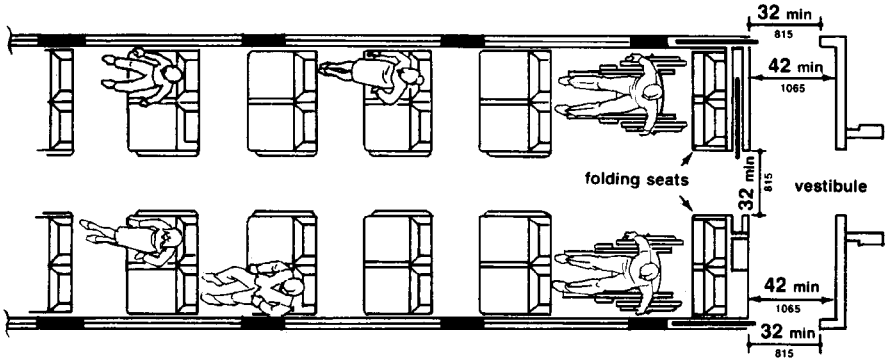

Fig. 3
Commuter Rail Car (without restrooms)

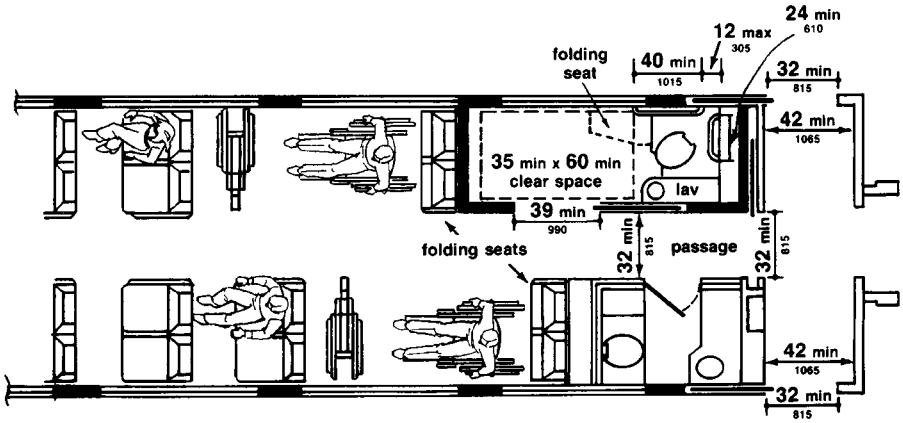

Fig. 4
Intercity Rail Car (with accessible restroom)

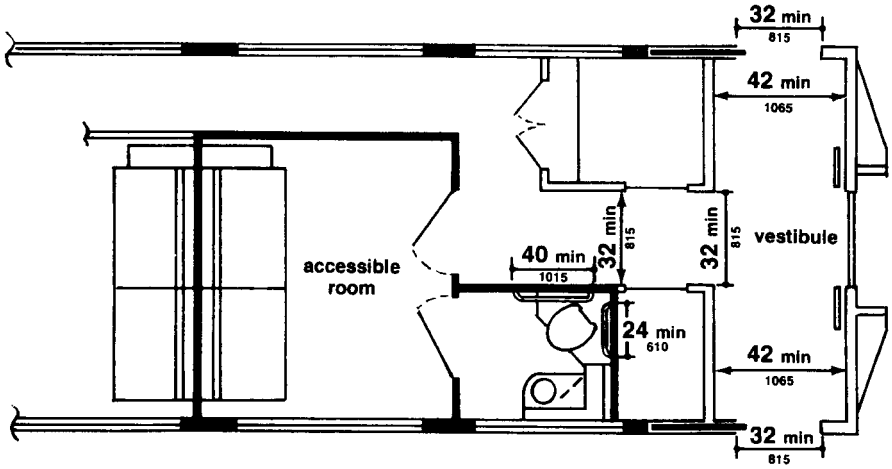

Fig. 5
Intercity Rail Car (with accessible sleeping compartment)

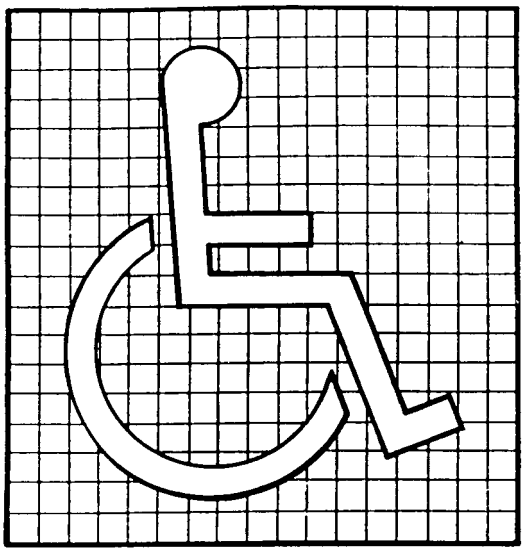

(a)
Proportions

(b)
Display Conditions

Fig. 6
International Symbol of Accessibility

[56 FR 45756, Sept. 6, 1991, as amended at 63 FR 51700, 51703, Sept. 28, 1998]

APPENDIX TO PART 38—GUIDANCE MATERIAL

This appendix contains materials of an advisory nature and provides additional information that should help the reader to understand the minimum requirements of the standards or to design vehicles for greater accessibility. Each entry is applicable to all subparts of this part except where noted. Nothing in this appendix shall in any way obviate any obligation to comply with the requirements of the standards themselves.

I. SLIP RESISTANT SURFACE—AISLES, STEPS, FLOOR AREAS WHERE PEOPLE WALK, FLOOR AREAS IN SECUREMENT LOCATIONS, LIFT PLATFORMS, RAMPS

Slip resistance is based on the frictional force necessary to keep a shoe heel or crutch tip from slipping on a walking surface under conditions likely to be found on the surface. While the dynamic coefficient of friction during walking varies in a complex and nonuniform way, the static coefficient of friction, which can be measured in several ways,

provides a close approximation of the slip resistance of a surface. Contrary to popular belief, some slippage is necessary to walking, especially for persons with restricted gaits; a truly ''non-slip'' surface could not be negotiated.

The Occupational Safety and Health Administration recommends that walking surfaces have a static coefficient of friction of 0.5. A research project sponsored by the Architectural and Transportation Barriers Compliance Board (Access Board) conducted tests with persons with disabilities and concluded that a higher coefficient of friction was needed by such persons. A static coefficient of friction of 0.6 is recommended for steps, floors, and lift platforms and 0.8 for ramps.

It is recognized that the coefficient of friction varies considerably due to the presence of contaminants, water, floor finishes, and other factors not under the control of transit providers and may be difficult to measure. Nevertheless, many common materials suitable for flooring are now labeled with information on the static coefficient of friction. While it may not be possible to compare one product directly with another, or to guarantee a constant measure, transit operators or vehicle designers and manufacturers are encouraged to specify materials with appropriate values. As more products include information on slip resistance, improved uniformity in measurement and specification is likely. The Access Board's advisory guidelines on Slip Resistant Surfaces provides additional information on this subject.

II. Color Contrast—Step Edges, Lift Platform Edges

The material used to provide contrast should contrast by at least 70%. Contrast in percent is determined by:

Contrast=[B · B)/B]×100

Where B=light reflectance value (LRV) of the lighter area

and B=light reflectance value (LRV) of the darker area.

Note that in any application both white and black are never absolute; thus, B never equals 100 and B is always greater than 0.

III. Handrails and Stanchions

In addition to the requirements for handrails and stanchions for rapid, light, and commuter rail vehicles, consideration should be given to the proximity of handrails or stanchions to the area in which wheelchair or mobility aid users may position themselves. When identifying the clear floor space where a wheelchair or mobility aid user can be accommodated, it is suggested that at least one such area be adjacent or in close proximity to a handrail or stanchion. Of course, such a handrail or stanchion cannot encroach upon the required 32 inch width required for the doorway or the route leading to the clear floor space which must be at least 30 by 48 inches in size.

IV. Priority Seating Signs and Other Signage

A. *Finish and Contrast.* The characters and background of signs should be eggshell, matte, or other non-glare finish. An eggshell finish (11 to 19 degree gloss on 60 degree glossimeter) is recommended. Characters and symbols shall contrast with their background—either light characters on a dark background or dark characters on a light background. Research indicates that signs are more legible for persons with low vision when characters contrast with their background by at least 70 percent. Contrast in percent shall be determined by:

Contrast=[B · B)/B]×100

Where B=light reflectance value (LRV) of the lighter area

and B=light reflectance value (LRV) of the darker area.

Note that in any application both white and black are never absolute; thus, B never equals 100 and B is always greater than 0.

The greatest readability is usually achieved through the use of light-colored characters or symbols on a dark background.

B. *Destination and Route Signs.* (The following specifications, which are required for buses (§ 38.39), are recommended for other types of vehicles, particularly light rail vehicles, were appropriate.)

1. Where destination or route information is displayed on the exterior of a vehicle, each vehicle shall have illuminated signs on the front and boarding side of the vehicle.

2. Characters on signs required by paragraph IV.B.1 of this appendix shall have a width-to-height ratio between 3:5 and 1:1 and a stroke width-to-height ratio between 1:5 and 1:10, with a minimum character height (using an upper case ''X'') of 1 inch for signs on the boarding side and a minimum character height of 2 inches for front ''headsigns,'' with ''wide'' spacing (generally, the space between letters shall be 1/16 the height of upper case letters), and shall contrast with the background, either dark-on-light or light-on-dark, or as recommended above.

C. *Designation of Accessible Vehicles.* The International Symbol of Accessibility should be displayed as shown in Figure 6.

V. Public Information Systems

This section has been reserved and there currently is no requirement that vehicles be equipped with an information system which is capable of providing the same or equivalent information to persons with hearing loss. While the Department assesses available and soon-to-be available technology during a study to be conducted during Fiscal Year 1992, entities are encouraged to employ

whatever services, signage or alternative systems or devices that provide equivalent access and are available. Two possible types of devices are visual display systems and listening systems. However, it should be noted that while visual display systems accommodate persons who are deaf or are hearing impaired, assistive listening systems aid only those with a partial loss of hearing.

A. *Visual Display Systems.* Announcements may be provided in a visual format by the use of electronic message boards or video monitors.

Electronic message boards using a light emitting diode (LED) or ''flip-dot'' display are currently provided in some transit stations and terminals and may be usable in vehicles. These devices may be used to provide real time or pre-programmed messages; however, real time message displays require the availability of an employee for keyboard entry of the information to be announced.

Video monitor systems, such as visual paging systems provided in some airports (e.g., Baltimore-Washington International Airport), are another alternative. The Architectural and Transportation Barriers Compliance Board (Access Board) can provide technical assistance and information on these systems (''Airport TDD Access: Two Case Studies,'' (1990)).

B. *Assistive Listening Systems.* Assistive listening systems (ALS) are intended to augment standard public address and audio systems by providing signals which can be received directly by persons with special receivers or their own hearing aids and which eliminate or filter background noise. Magnetic induction loops, infra-red and radio frequency systems are types of listening systems which are appropriate for various applications.

An assistive listening system appropriate for transit vehicles, where a group of persons or where the specific individuals are not known in advance, may be different from the system appropriate for a particular individual provided as an auxiliary aid or as part of a reasonable accommodation. The appropriate device for an individual is the type that individual can use, whereas the appropriate system for a station or vehicle will necessarily be geared toward the ''average'' or aggregate needs of various individuals. Earphone jacks with variable volume controls can benefit only people who have slight hearing loss and do not help people who use hearing aids. At the present time, magnetic induction loops are the most feasible type of listening system for people who use hearing aids equipped with ''T-coils'', but people without hearing aids or those with hearing aids not equipped with inductive pick-ups cannot use them without special receivers. Radio frequency systems can be extremely effective and inexpensive. People without hearing aids can use them, but people with hearing aids need a special receiver to use them as they are presently designed. If hearing aids had a jack to allow a by-pass of microphones, then radio frequency systems would be suitable for people with and without hearing aids. Some listening systems may be subject to interference from other equipment and feedback from hearing aids of people who are using the systems. Such interference can be controlled by careful engineering design that anticipates feedback sources in the surrounding area.

The Architectural and Transportation Barriers Compliance Board (Access Board) has published a pamphlet on Assistive Listening Systems which lists demonstration centers across the country where technical assistance can be obtained in selecting and installing appropriate systems. The State of New York has also adopted a detailed technical specification which may be useful.

VI. Over-the-Road Buses

A. *Door Width.* Achieving a 30 inch wide front door on an over-the-road bus is considered not feasible if doing so would necessitate reduction of the bus approach angle, relocating the front axle rearward, or increasing the bus overall length.

B. *Restrooms.* The following is provided to assist manufacturers and designers to create restrooms which can be used by people with disabilities. These specifications are derived from requirements for rail vehicles and represent compromises between space needed for use and constraints imposed by vehicle dimensions. As a result, some persons with disabilities cannot use a restroom which meets these specifications and operators who do provide such restrooms should provide passengers with disabilities sufficient advance information about design so that those passengers can assess their ability to use them. Designers should provide additional space beyond these minimum specifications whenever possible.

(1) If an accessible restroom is provided, it should be designed so as to allow a person using a wheelchair or mobility aid to enter and use such restroom as specified in paragraphs (1)(a) through (e) of section VI.B of this appendix.

(a) The minimum clear floor area should be 35 inches (890 mm) by 60 inches (1525 mm). Permanently installed fixtures may overlap this area a maximum of 6 inches (150 mm), if the lowest portion of the fixture is a minimum of 9 inches (230 mm) above the floor, and may overlap a maximum of 19 inches (485 mm), if the lowest portion of the fixture is a minimum of 29 inches (740 mm) above the floor, provided such fixtures do not interfere with access to the water closet. Fold-down or retractable seats or shelves may overlap the clear floor space at a lower height provided they can be easily folded up or moved out of the way.

(b) The height of the water closet should be 17 inches (430 mm) to 19 inches (485 mm) measured to the top of the toilet seat. Seats should not be sprung to return to a lifted position.

(c) A grab bar at least 24 inches (610 mm) long should be mounted behind the water closet, and a horizontal grab bar at least 40 inches (1015 mm) long should be mounted on at least one side wall, with one end not more than 12 inches (305 mm) from the back wall, at a height between 33 inches (840 mm) and 36 inches (915 mm) above the floor.

(d) Faucets and flush controls should be operable with one hand and should not require tight grasping, pinching, or twisting of the wrist. The force required to activate controls should be no greater than 5 lbs (22.2 N). Controls for flush valves should be mounted no more than 44 inches (1120 mm) above the floor.

(e) Doorways on the end of the enclosure, opposite the water closet, should have a minimum clear opening width of 32 inches (815 mm). Door latches and hardware should be operable with one hand and should not require tight grasping, pinching, or twisting of the wrist.

(2) Accessible restrooms should be in close proximity to at least one seating location for persons using mobility aids and should be connected to such a space by an unobstructed path having a minimum width of 32 inches (815 mm).

C. *Visibility Through a Window*. Care should be taken so that the lift does not obscure the vision of the person occupying the securement position.

[56 FR 45756, Sept. 6, 1991, as amended at 63 FR 51702, 51703, Sept. 28, 1998]

PART 40—PROCEDURES FOR TRANSPORTATION WORKPLACE DRUG TESTING PROGRAMS

Subpart A—General

Sec.
40.1 Applicability.
40.3 Definitions.
40.5–40.19 [Reserved]

Subpart B—Drug Testing

40.21 The drugs.
40.23 Preparation for testing.
40.25 Specimen collection procedures.
40.27 Laboratory personnel.
40.29 Laboratory analysis procedures.
40.31 Quality assurance and quality control.
40.33 Reporting and review of results.
40.35 Protection of employee records.
40.37 Individual access to test and laboratory certification results.
40.39 Use of certified laboratories.

Subpart C—Alcohol Testing

40.51 The breath alcohol technician.
40.53 Devices to be used for breath alcohol tests.
40.55 Quality assurance plans for EBTs.
40.57 Locations for breath alcohol testing.
40.59 The breath alcohol testing form.
40.61 Preparation for breath alcohol testing.
40.63 Procedures for screening tests.
40.65 Procedures for confirmation tests.
40.67 Refusals to test and uncompleted tests.
40.69 Inability to provide an adequate amount of breath.
40.71–40.77 [Reserved]
40.79 Invalid tests.
40.81 Availability and disclosure of alcohol testing information about individual employees.
40.83 Maintenance and disclosure of records concerning EBTs and BATs.

Subpart D—Non-Evidential Alcohol Screening Devices

40.91 Authorization for use of non-evidential alcohol screening devices.
40.93 The screening test technician.
40.95 Quality assurance plans for non-evidential screening devices.
40.97 Locations for non-evidential alcohol screening tests.
40.99 Testing forms.
40.101 Screening test procedure.
40.103 Refusals to test and uncompleted tests.
40.105 Inability to provide an adequate amount of breath or saliva.
40.107 Invalid tests.
40.109 Availability and disclosure of alcohol testing information about individual employees.
40.111 Maintenance and disclosure of records concerning non-evidential testing devices and STTs.
APPENDIX A TO PART 40—FEDERAL DRUG TESTING CUSTODY AND CONTROL FORM
APPENDIX B TO PART 40—THE BREATH ALCOHOL TESTING FORM

AUTHORITY: 49 U.S.C. 102, 301, 322, 5331, 20140, 31306, 45101–45106.

SOURCE: 54 FR 49866, Dec. 1, 1989, unless otherwise noted.

Subpart A—General

SOURCE: 59 FR 7354, Feb. 15, 1994, unless otherwise noted.

§40.1 Applicability.

This part applies, through regulations that reference it issued by agencies of the Department of Transportation, to transportation employers, including self-employed individuals, required to conduct drug and/or alcohol testing programs by DOT agency regulations and to such transportation employers' officers, employees, agents and contractors (including, but not limited to, consortia). Employers are responsible for the compliance of their officers, employees, agents, consortia and/or contractors with the requirements of this part.

§40.3 Definitions.

The following definitions apply to this part:

Air blank. A reading by an EBT of ambient air containing no alcohol. (In EBTs using gas chromatography technology, a reading of the device's internal standard.)

Alcohol. The intoxicating agent in beverage alcohol, ethyl alcohol or other low molecular weight alcohols including methyl or isopropyl alcohol.

Alcohol concentration. The alcohol in a volume of breath expressed in terms of grams of alcohol per 210 liters of breath as indicated by a breath test under this part.

Alcohol use. The consumption of any beverage, mixture or preparation, including any medication, containing alcohol.

Aliquot. A portion of a specimen used for testing.

Blind sample or blind performance test specimen. A urine specimen submitted to a laboratory for quality control testing purposes, with a fictitious identifier, so that the laboratory cannot distinguish it from employee specimens, and which is spiked with known quantities of specific drugs or which is blank, containing no drugs.

Breath Alcohol Technician (BAT). An individual who instructs and assists individuals in the alcohol testing process and operates an EBT.

Canceled or invalid test. In drug testing, a drug test that has been declared invalid by a Medical Review Officer. A canceled test is neither a positive nor a negative test. For purposes of this part, a sample that has been rejected for testing by a laboratory is treated the same as a canceled test. In alcohol testing, a test that is deemed to be invalid under §40.79. It is neither a positive nor a negative test.

Chain of custody. Procedures to account for the integrity of each urine or blood specimen by tracking its handling and storage from point of specimen collection to final disposition of the specimen. With respect to drug testing, these procedures shall require that an appropriate drug testing custody form (see §40.23(a)) be used from time of collection to receipt by the laboratory and that upon receipt by the laboratory an appropriate laboratory chain of custody form(s) account(s) for the sample or sample aliquots within the laboratory.

Collection container. A container into which the employee urinates to provide the urine sample used for a drug test.

Collection site. A place designated by the employer where individuals present themselves for the purpose of providing a specimen of their urine to be analyzed for the presence of drugs.

Collection site person. A person who instructs and assists individuals at a collection site and who receives and makes a screening examination of the urine specimen provided by those individuals.

Confirmation (or confirmatory) test. In drug testing, a second analytical procedure to identify the presence of a specific drug or metabolite that is independent of the screening test and that uses a different technique and chemical principle from that of the screening test in order to ensure reliability and accuracy. (Gas chromatography/mass spectrometry (GC/MS) is the only authorized confirmation method for cocaine, marijuana, opiates, amphetamines, and phencyclidine.) In alcohol testing, a second test, following a screening test with a result of 0.02 or greater, that provides quantitative data of alcohol concentration.

DHHS. The Department of Health and Human Services or any designee of the Secretary, Department of Health and Human Services.

DOT agency. An agency of the United States Department of Transportation administering regulations related to drug or alcohol testing, including the

United States Coast Guard (for drug testing purposes only), the Federal Aviation Administration, the Federal Railroad Administration, the Federal Highway Administration, the Federal Transit Administration, the Research and Special Programs Administration, and the Office of the Secretary.

Employee. An individual designated in a DOT agency regulation as subject to drug testing and/or alcohol testing. As used in this part ''employee'' includes an applicant for employment. ''Employee'' and ''individual'' or ''individual to be tested'' have the same meaning for purposes of this part.

Employer. An entity employing one or more employees that is subject to DOT agency regulations requiring compliance with this part. As used in this part, *employer* includes an industry consortium or joint enterprise comprised of two or more employing entities.

EBT (or evidential breath testing device). An EBT approved by the National Highway Traffic Safety Administration (NHTSA) for the evidential testing of breath and placed on NHTSA's ''Conforming Products List of Evidential Breath Measurement Devices'' (CPL), and identified on the CPL as conforming with the model specifications available from the National Highway Traffic Safety Administration, Office of Alcohol and State Programs.

Medical Review Officer (MRO). A licensed physician (medical doctor or doctor of osteopathy) responsible for receiving laboratory results generated by an employer's drug testing program who has knowledge of substance abuse disorders and has appropriate medical training to interpret and evaluate an individual's confirmed positive test result together with his or her medical history and any other relevant biomedical information.

Screening test (or initial test). In drug testing, an immunoassay screen to eliminate ''negative'' urine specimens from further analysis. In alcohol testing, an analytic procedure to determine whether an employee may have a prohibited concentration of alcohol in a breath specimen.

Secretary. The Secretary of Transportation or the Secretary's designee.

Shipping container. A container capable of being secured with a tamper-evident seal that is used for transfer of one or more urine specimen bottle(s) and associated documentation from the collection site to the laboratory.

Specimen bottle. The bottle that, after being labeled and sealed according to the procedures in this part, is used to transmit a urine sample to the laboratory.

Substance abuse professional. A licensed physician (Medical Doctor or Doctor of Osteopathy); or a licensed or certified psychologist, social worker, or employee assistance professional; or an addiction counselor (certified by the National Association of Alcoholism and Drug Abuse Counselors Certification Commission or by the International Certification Reciprocity Consortium/Alcohol & Other Drug Abuse). All must have knowledge of and clinical experience in the diagnosis and treatment of alcohol and controlled substances-related disorders.

[59 FR 7354, Feb. 15, 1994, as amended at 59 FR 43000, Aug. 19, 1994; 61 FR 37224, July 17, 1996]

§§ 40.5–40.19 [Reserved]

Subpart B—Drug Testing

§ 40.21 The drugs.

(a) DOT agency drug testing programs require that employers test for marijuana, cocaine, opiates, amphetamines and phencyclidine.

(b) An employer may include in its testing protocols other controlled substances or alcohol only pursuant to a DOT agency approval, if testing for those substances is authorized under agency regulations and if the DHHS has established an approved testing protocol and positive threshold for each such substance.

(c) Urine specimens collected under DOT agency regulations requiring compliance with this part may only be used to test for controlled substances designated or approved for testing as described in this section and shall not be used to conduct any other analysis or test unless otherwise specifically authorized by DOT agency regulations.

(d) This section does not prohibit procedures reasonably incident to analysis of the specimen for controlled substances (e.g., determination of pH or tests for specific gravity, creatinine concentration or presence of adulterants).

§40.23 Preparation for testing.

The employer and certified laboratory shall develop and maintain a clear and well-documented procedure for collection, shipment, and accessioning of urine specimens under this part. Such a procedure shall include, at a minimum, the following:

(a)(1) Except as provided in paragraph (a)(2) of this section, use of the drug testing form prescribed under this part.

(i) This form is found in appendix A to this part.

(ii) Employers and other participants in the DOT drug testing program may not modify or revise this form, except that the drug testing custody and control form may include such additional information as may be required for billing or other legitimate purposes necessary to the collection, provided that personal identifying information on the donor (other than the social security number or other employee ID number) may not be provided to the laboratory.

(iii) Donor medical information may appear only on the copy provided the donor.

(2) Notwithstanding the requirement of paragraph (a)(1)(ii) of this section, employers and other participants may use existing forms that were in use in the DOT drug testing program prior to February 16, 1995, until June 1, 1995.

(b)(1) Use of a clean, single-use specimen bottle that is securely wrapped until filled with the specimen. A clean, single-use collection container (e.g., disposable cup or sterile urinal) that is securely wrapped until used may also be employed. *If urination is directly into the specimen bottle,* the specimen bottle shall be provided to the employee still sealed in its wrapper or shall be unwrapped in the employee's presence immediately prior to its being provided. *If a separate collection container is used for urination,* the collection container shall be provided to the employee still sealed in its wrapper or shall be unwrapped in the employee's presence immediately prior to its being provided; and the collection site person shall unwrap the specimen bottle in the presence of the employee at the time the urine specimen is presented.

(2) Use of a tamperproof sealing system, designed in a manner such to ensure against undetected opening. The specimen bottle shall be identified with a unique identifying number identical to that appearing on the urine custody and control form, and space shall be provided to initial the bottle affirming its identity. For purposes of clarity, this part assumes use of a system made up of one or more preprinted labels and seals (or a unitary label/seal), but use of other, equally effective technologies is authorized.

(c) Use of a shipping container in which the specimen and associated paperwork may be transferred and which can be sealed and initialled to prevent undetected tampering. If the split specimen option is exercised, the split specimen and associated paperwork shall be sealed in a shipping (or storage) container and initialled to prevent undetected tampering.

(d) Written procedures, instructions and training shall be provided as follows:

(1) Employer collection procedures and training shall clearly emphasize that the collection site person is responsible for maintaining the integrity of the specimen collection and transfer process, carefully ensuring the modesty and privacy of the donor, and is to avoid any conduct or remarks that might be construed as accusatorial or otherwise offensive or inappropriate.

(2) A collection site person shall have successfully completed training to carry out this function or shall be a licensed medical professional or technician who is provided instructions for collection under this part and certifies completion as required in this part

(i) A non-medical collection site person shall receive training in compliance with this part and shall demonstrate proficiency in the application

of this part prior to serving as a collection site person. A medical professional, technologist or technician licensed or otherwise approved to practice in the jurisdiction in which the collection takes place is not required to receive such training if that person is provided instructions described in this part and performs collections in accordance with those instructions.

(ii) Collection site persons shall be provided with detailed, clear instructions on the collection of specimens in compliance with this part. Employer representatives and donors subject to testing shall also be provided standard written instructions setting forth their responsibilities.

(3) Unless it is impracticable for any other individual to perform this function, a direct supervisor of an employee shall not serve as the collection site person for a test of the employee. If the rules of a DOT agency are more stringent than this provision regarding the use of supervisors as collection site personnel, the DOT agency rules shall prevail with respect to testing to which they apply.

(4) In any case where a collection is monitored by non-medical personnel or is directly observed, the collection site person shall be of the same gender as the donor. A collection is monitored for this purpose if the enclosure provides less than complete privacy for the donor (e.g., if a restroom stall is used and the collection site person remains in the restroom, or if the collection site person is expected to listen for use of unsecured sources of water.)

[54 FR 49866, Dec. 1, 1989, as amended at 60 FR 19536, Apr. 19, 1995]

§ 40.25 Specimen collection procedures.

(a) *Designation of collection site.* (1) Each employer drug testing program shall have one or more designated collection sites which have all necessary personnel, materials, equipment, facilities and supervision to provide for the collection, security, temporary storage, and shipping or transportation of urine specimens to a certified drug testing laboratory. An independent medical facility may also be utilized as a collection site provided the other applicable requirements of this part are met.

(2) A designated collection site may be any suitable location where a specimen can be collected under conditions set forth in this part, including a properly equipped mobile facility. A designated collection site shall be a location having an enclosure within which private urination can occur, a toilet for completion of urination (unless a single-use collector is used with sufficient capacity to contain the void), and a suitable clean surface for writing. The site must also have a source of water for washing hands, which, if practicable, should be external to the enclosure where urination occurs.

(b) *Security.* The purpose of this paragraph is to prevent unauthorized access which could compromise the integrity of the collection process or the specimen.

(1) Procedures shall provide for the designated collection site to be secure. If a collection site facility is dedicated solely to urine collection, it shall be secure at all times. If a facility cannot be dedicated solely to drug testing, the portion of the facility used for testing shall be secured during drug testing.

(2) A facility normally used for other purposes, such as a public rest room or hospital examining room, may be secured by visual inspection to ensure other persons are not present and undetected access (e.g., through a rear door not in the view of the collection site person) is not possible. Security during collection may be maintained by effective restriction of access to collection materials and specimens. In the case of a public rest room, the facility must be posted against access during the entire collection procedure to avoid embarrassment to the employee or distraction of the collection site person.

(3) If it is impractical to maintain continuous physical security of a collection site from the time the specimen is presented until the sealed mailer is transferred for shipment, the following minimum procedures shall apply. The specimen shall remain under the direct control of the collection site person from delivery to its being sealed in the mailer. The mailer shall be immediately mailed, maintained in secure storage, or remain until mailed under

the personal control of the collection site person.

(c) *Chain of custody*. The chain of custody block of the drug testing custody and control form shall be properly executed by authorized collection site personnel upon receipt of specimens. Handling and transportation of urine specimens from one authorized individual or place to another shall always be accomplished through chain of custody procedures. Since specimens and documentation are sealed in shipping containers that would indicate any tampering during transit to the laboratory and couriers, express carriers, and postal service personnel do not have access to the chain of custody forms, there is no requirement that such personnel document chain of custody for the shipping container during transit. Nor is there a requirement that there be a chain of custody entry when a specimen which is sealed in such a shipping container is put into or taken out of secure storage at the collection site prior to pickup by such personnel. This means that the chain of custody is not broken, and a test shall not be canceled, because couriers, express carriers, postal service personnel, or similar persons involved solely with the transportation of a specimen to a laboratory, have not documented their participation in the chain of custody documentation or because the chain of custody does not contain entries related to putting the specimen into or removing it from secure temporary storage at the collection site. Every effort shall be made to minimize the number of persons handling specimens.

(d) *Access to authorized personnel only*. No unauthorized personnel shall be permitted in any part of the designated collection site where urine specimens are collected or stored. Only the collection site person may handle specimens prior to their securement in the mailing container or monitor or observe specimen collection (under the conditions specified in this part). In order to promote security of specimens, avoid distraction of the collection site person and ensure against any confusion in the identification of specimens, the collection site person shall have only one donor under his or her supervision at any time. For this purpose, a collection procedure is complete when the urine bottle has been sealed and initialled, the drug testing custody and control form has been executed, and the employee has departed the site (or, in the case of an employee who was unable to provide a complete specimen, has entered a waiting area).

(e) *Privacy*. (1) Procedures for collecting urine specimens shall allow individual privacy unless there is a reason to believe that a particular individual may alter or substitute the specimen to be provided, as further described in this paragraph.

(2) For purposes of this part, the following circumstances are the exclusive grounds constituting a reason to believe that the individual may alter or substitute the specimen:

(i) The employee has presented a urine specimen that falls outside the normal temperature range (32°–38° C/ 90°–100° F), and

(A) The employee declines to provide a measurement of body temperature (taken by a means other than use of a rectal thermometer), as provided in paragraph (f)(14) of the part; or

(B) Body temperature varies by more than 1°C/1.8°F from the temperature of the specimen;

(ii) The last urine specimen provided by the employee (i.e., on a previous occasion) was determined by the laboratory to have a specific gravity of less than 1.003 and a creatinine concentration below .2g/L;

(iii) The collection site person observes conduct clearly and unequivocally indicating an attempt to substitute or adulterate the sample (e.g., substitute urine in plain view, blue dye in specimen presented, etc.); or

(iv) The employee has previously been determined to have used a controlled substance without medical authorization and the particular test was being conducted under a DOT agency regulation providing for follow-up testing upon or after return to service.

(3) A higher-level supervisor of the collection site person, or a designated employer representative, shall review and concur in advance with any decision by a collection site person to obtain a specimen under the direct observation of a same gender collection site person based upon the circumstances

described in subparagraph (2) of this paragraph.

(f) *Integrity and identity of specimen.* Employers shall take precautions to ensure that a urine specimen is not adulterated or diluted during the collection procedure and that information on the urine bottle and on the urine custody and control form can identify the individual from whom the specimen was collected. The following minimum precautions shall be taken to ensure that unadulterated specimens are obtained and correctly identified:

(1) To deter the dilution of specimens at the collection site, toilet bluing agents shall be placed in toilet tanks wherever possible, so the reservoir of water in the toilet bowl always remains blue. Where practicable, there shall be no other source of water (e.g., shower or sink) in the enclosure where urination occurs. If there is another source of water in the enclosure it shall be effectively secured or monitored to ensure it is not used as a source for diluting the specimen.

(2) When an individual arrives at the collection site, the collection site person shall ensure that the individual is positively identified as the employee selected for testing (e.g., through presentation of photo identification or identification by the employer's representative). If the individual's identity cannot be established, the collection site person shall not proceed with the collection. If the employee requests, the collection site person shall show his/her identification to the employee.

(3) If the individual fails to arrive at the assigned time, the collection site person shall contact the appropriate authority to obtain guidance on the action to be taken.

(4) The collection site person shall ask the individual to remove any unnecessary outer garments such as a coat or jacket that might conceal items or substances that could be used to tamper with or adulterate the individual's urine specimen. The collection site person shall ensure that all personal belongings such as a purse or briefcase remain with the outer garments. The individual may retain his or her wallet. If the employee requests it, the collection site personnel shall provide the employee a receipt for any personal belongings.

(5) The individual shall be instructed to wash and dry his or her hands prior to urination.

(6) After washing hands, the individual shall remain in the presence of the collection site person and shall not have access to any water fountain, faucet, soap dispenser, cleaning agent or any other materials which could be used to adulterate the specimen.

(7) The individual may provide his/her specimen in the privacy of a stall or otherwise partitioned area that allows for individual privacy. The collection site person shall provide the individual with a specimen bottle or collection container, if applicable, for this purpose.

(8) The collection site person shall note any unusual behavior or appearance on the urine custody and control form.

(9) In the exceptional event that an employer-designated collection site is not accessible and there is an immediate requirement for specimen collection (e.g., circumstances require a post-accident test), a public rest room may be used according to the following procedures: A collection site person of the same gender as the individual shall accompany the individual into the public rest room which shall be made secure during the collection procedure. If possible, a toilet bluing agent shall be placed in the bowl and any accessible toilet tank. The collection site person shall remain in the rest room, but outside the stall, until the specimen is collected. If no bluing agent is available to deter specimen dilution, the collection site person shall instruct the individual not to flush the toilet until the specimen is delivered to the collection site person. After the collection site person has possession of the specimen, the individual will be instructed to flush the toilet and to participate with the collection site person in completing the chain of custody procedures.

(10) The collection site person shall instruct the employee to provide at least 45 ml of urine under the split sample method of collection or 30 ml of urine under the single sample method of collection.

(i)(A) Employers with employees subject to drug testing only under the drug testing rules of the Research and Special Programs Administration and/or Coast Guard may use the ''split sample'' method of collection or may collect a single sample for those employees.

(B) Employers with employees subject to drug testing under the drug testing rules of the Federal Highway Administration, Federal Railroad Administration, Federal Transit Administration, or Federal Aviation Administration shall use the ''split sample'' method of collection for those employees.

(ii) Employers using the split sample method of collection shall follow the procedures in this paragraph (f)(10)(ii):

(A) The donor shall urinate into a collection container or a specimen bottle capable of holding at least 60 ml.

(B)(*1*) If a collection container is used, the collection site person, in the presence of the donor, pours the urine into two specimen bottles. Thirty (30) ml shall be poured into one specimen bottle, to be used as the primary specimen. At least 15 ml shall be poured into the other bottle, to be used as the split specimen.

(*2*) If a single specimen bottle is used as a collection container, the collection site person, in the presence of the donor, shall pour 15 ml of urine from the specimen bottle into a second specimen bottle (to be used as the split specimen) and retain the remainder (at least 30 ml) in the collection bottle (to be used as the primary specimen).

(C) Nothing in this section precludes the use of a collection method or system that does not involve the physical pouring of urine from one container or bottle to another by the collection site person, provided that the method or system results in the subdivision of the specimen into a primary (30 ml) and a split (at least 15 ml) specimen that can be transmitted to the laboratory and tested in accordance with the requirements of this Subpart.

(D) Both bottles shall be shipped in a single shipping container, together with copies 1,2, and the split specimen copy of the chain of custody form, to the laboratory.

(E) If the test result of the primary specimen is positive, the employee may request that the MRO direct that the split specimen be tested in a different DHHS-certified laboratory for presence of the drug(s) for which a positive result was obtained in the test of the primary specimen. The MRO shall honor such a request if it is made within 72 hours of the employee having been notified of a verified positive test result.

(F) When the MRO informs the laboratory in writing that the employee has requested a test of the split specimen, the laboratory shall forward, to a different DHHS-approved laboratory, the split specimen bottle, with seal intact, a copy of the MRO request, and the split specimen copy of the chain of custody form with appropriate chain of custody entries.

(G) The result of the test of the split specimen is transmitted by the second laboratory to the MRO.

(H) Action required by DOT agency regulations as the result of a positive drug test (e.g., removal from performing a safety-sensitive function) is not stayed pending the result of the test of the split specimen.

(I) If the result of the test of the split specimen fails to reconfirm the presence of the drug(s) or drug metabolite(s) found in the primary specimen, the MRO shall cancel the test, and report the cancellation and the reasons for it to the DOT, the employer, and the employee.

(iii) Employers using the single sample collection method shall follow the procedures in paragraph:

(A) The collector may choose to direct the employee to urinate either directly into a specimen bottle or into a separate collection container.

(B) If a separate collection container is used, the collection site person shall pour at least 30 ml of the urine from the collection container into the specimen bottle in the presence of the employee.

(iv)(A)(*1*) In either collection methodology, upon receiving the specimen from the individual, the collection site person shall determine if the specimen has at least 30 milliliters of urine for a single specimen collection or 45 milliliters of urine for a split specimen collection.

(*2*) If the individual has not provided the required quantity of urine, the specimen shall be discarded. The collection site person shall direct the individual to drink up to 40 ounces of fluid, distributed reasonably through a period of up to three hours, or until the individual has provided a new urine specimen, whichever occurs first. If the employee refuses to drink fluids as directed or to provide a new urine specimen, the collection site person shall terminate the collection and notify the employer that the employee has refused to submit to testing.

(*3*) If the employee has not provided a sufficient specimen within three hours of the first unsuccessful attempt to provide the specimen, the collection site person shall discontinue the collection and notify the employer.

(B) The employer shall direct any employee who does not provide a sufficient urine specimen (see paragraph (f)(10)(iv)(A)(*3*) of this section) to obtain, as soon as possible after the attempted provision of urine, an evaluation from a licensed physician who is acceptable to the employer concerning the employee's ability to provide an adequate amount of urine.

(*1*) If the physician determines, in his or her reasonable medical judgment, that a medical condition has, or with a high degree of probability, could have, precluded the employee from providing an adequate amount of urine, the employee's failure to provide an adequate amount of urine shall not be deemed a refusal to take a test. For purposes of this paragraph, a medical condition includes an ascertainable physiological condition (e.g., a urinary system dysfunction) or a documented pre-existing psychological disorder, but does not include unsupported assertions of ''situational anxiety'' or dehydration. The physician shall provide to the MRO a brief written statement setting forth his or her conclusion and the basis for it, which shall not include detailed information on the medical condition of the employee. Upon receipt of this statement, the MRO shall report his or her conclusions to the employer in writing.

(*2*) If the physician, in his or her reasonable medical judgment, is unable to make the determination set forth in paragraph (f)(10)(iv)(B)(*1*) of this section, the employee's failure to provide an adequate amount of urine shall be regarded as a refusal to take a test. The physician shall provide to the MRO a brief written statement setting forth his or her conclusion and the basis for it, which shall not include detailed information on the medical condition of the employee. Upon receipt of this statement, the MRO shall report his or her conclusions to the employer in writing.

(11) After the specimen has been provided and submitted to the collection site person, the individual shall be allowed to wash his or her hands.

(12) Immediately after the specimen is collected, the collection site person shall measure the temperature of the specimen. The temperature measuring device used must accurately reflect the temperature of the specimen and not contaminate the specimen. The time from urination to temperature measure is critical and in no case shall exceed 4 minutes.

(13) A specimen temperature outside the range of 32°–38° C/90°–100° F constitutes a reason to believe that the individual has altered or substituted the specimen (see paragraph (e)(2)(i) of this section). In such cases, the individual supplying the specimen may volunteer to have his or her oral temperature taken to provide evidence to counter the reason to believe the individual may have altered or substituted the specimen.

(14) Immediately after the specimen is collected, the collection site person shall also inspect the specimen to determine its color and look for any signs of contaminants. Any unusual findings shall be noted on the urine custody and control form.

(15) All specimens suspected of being adulterated shall be forwarded to the laboratory for testing.

(16) Whenever there is reason to believe that a particular individual has altered or substituted the specimen as described in paragraph (e)(2) (i) or (iii) of this section, a second specimen shall be obtained as soon as possible under the direct observation of a same gender collection site person.

(17) Both the individual being tested and the collection site person shall

keep the specimen in view at all times prior to its being sealed and labeled. As provided below, the specimen shall be sealed (by placement of a tamperproof seal over the bottle cap and down the sides of the bottle) and labeled in the presence of the employee. If the specimen is transferred to a second bottle, the collection site person shall request the individual to observe the transfer of the specimen and the placement of the tamperproof seal over the bottle cap and down the sides of the bottle.

(18) The collection site person and the individual being tested shall be present at the same time during procedures outlined in paragraphs (f)(19)–(f)(22) of this section.

(19) The collection site person shall place securely on the bottle an identification label which contains the date, the individual's specimen number, and any other identifying information provided or required by the employer. If separate from the label, the tamperproof seal shall also be applied.

(20) The individual shall initial the identification label on the specimen bottle for the purpose of certifying that it is the specimen collected from him or her.

(21) The collection site person shall enter on the drug testing custody and control form all information identifying the specimen. The collection site person shall sign the drug testing custody and control form certifying that the collection was accomplished according to the applicable Federal requirements.

(22)(i) The individual shall be asked to read and sign a statement on the drug testing custody and control form certifying that the specimen identified as having been collected from him or her is in fact the specimen he or she provided.

(ii) When specified by DOT agency regulation or required by the collection site (other than an employer site) or by the laboratory, the employee may be required to sign a consent or release form authorizing the collection of the specimen, analysis of the specimen for designated controlled substances, and release of the results to the employer. The employee may not be required to waive liability with respect to negligence on the part of any person participating in the collection, handling or analysis of the specimen or to indemnify any person for the negligence of others.

(23) The collection site person shall complete the chain of custody portion of the drug testing custody and control form to indicate receipt of the specimen from the employee and shall certify proper completion of the collection.

(24) The urine specimen and chain of custody form are now ready for shipment. If the specimen is not immediately prepared for shipment, the collection site person shall ensure that it is appropriately safeguarded during temporary storage.

(25)(i) While any part of the above chain of custody procedures is being performed, it is essential that the urine specimen and custody documents be under the control of the involved collection site person. If the involved collection site person leaves his or her work station momentarily, the collection site person shall take the specimen and drug testing custody and control form with him or her or shall secure them. After the collection site person returns to the work station, the custody process will continue. If the collection site person is leaving for an extended period of time, he or she shall package the specimen for mailing before leaving the site.

(ii) The collection site person shall not leave the collection site in the interval between presentation of the specimen by the employee and securement of the sample with an identifying label bearing the employee's specimen identification number (shown on the urine custody and control form) and seal initialed by the employee. If it becomes necessary for the collection site person to leave the site during this interval, the collection shall be nullified and (at the election of the employer) a new collection begun.

(g) *Collection control.* To the maximum extent possible, collection site personnel shall keep the individual's specimen bottle within sight both before and after the individual has urinated. After the specimen is collected, it shall be properly sealed and labeled.

(h) *Transportation to laboratory.* Collection site personnel shall arrange to

ship the collected specimen to the drug testing laboratory. The specimens shall be placed in shipping containers designed to minimize the possibility of damage during shipment (e.g., specimen boxes and/or padded mailers); and those containers shall be securely sealed to eliminate the possibility of undetected tampering with the specimen and/or the form. On the tape sealing the shipping container, the collection site person shall sign and enter the date specimens were sealed in the shipping container for shipment. The collection site person shall ensure that the chain of custody documentation is enclosed in each container sealed for shipment to the drug testing laboratory. Since specimens and documentation are sealed in shipping containers that would indicate any tampering during transit to the laboratory and couriers, express carriers, and postal service personnel do not have access to the chain of custody forms, there is no requirement that such personnel document chain of custody for the shipping container during transit. Nor is there a requirement that there be a chain of custody entry when a specimen which is sealed in such a shipping container is put into or taken out of secure storage at the collection site prior to pickup by such personnel. This means that the chain of custody is not broken, and a test shall not be canceled, because couriers, express carriers, postal service personnel, or similar persons involved solely with the transportation of a specimen to a laboratory, have not documented their participation in the chain of custody documentation or because the chain of custody does not contain entries related to putting the specimen into or removing it from secure temporary storage at the collection site.

(i) *Failure to cooperate.* If the employee refuses to cooperate with the collection process, the collection site person shall inform the employer representative and shall document the non-cooperation on the drug testing custody and control form.

(j) *Employee requiring medical attention.* If the sample is being collected from an employee in need of medical attention (e.g., as part of a post-accident test given in an emergency medical facility), necessary medical attention shall not be delayed in order to collect the specimen.

(k) *Use of chain of custody form.* A chain of custody form (and a laboratory internal chain of custody document, where applicable), shall be used for maintaining control and accountability of each specimen from the point of collection to final disposition of the specimen. The date and purpose shall be documented on the form each time a specimen is handled or transferred and every individual in the chain of custody shall be identified. Since specimens and documentation are sealed in shipping containers that would indicate any tampering during transit to the laboratory and couriers, express carriers, and postal service personnel do not have access to the chain of custody forms, there is no requirement that such personnel document chain of custody for the shipping container during transit. Nor is there a requirement that there be a chain of custody entry when a specimen which is sealed in such a shipping container is put into or taken out of secure storage at the collection site prior to pickup by such personnel. This means that the chain of custody is not broken, and a test shall not be canceled, because couriers, express carriers, postal service personnel, or similar persons involved solely with the transportation of a specimen to a laboratory, have not documented their participation in the chain of custody documentation or because the chain of custody does not contain entries related to putting the specimen into or removing it from secure temporary storage at the collection site. Every effort shall be made to minimize the number of persons handling specimens.

[54 FR 49866, Dec. 1, 1989, as amended at 59 FR 7355, Feb. 15, 1994; 59 FR 43000, Aug. 19, 1994; 61 FR 37699, July 19, 1996]

§ 40.27 Laboratory personnel.

(a) *Day-to-day management.* (1) The laboratory shall have a qualified individual to assume professional, organizational, educational, and administrative responsibility for the laboratory's urine drug testing facility.

(2) This individual shall have documented scientific qualifications in analytical forensic toxicology. Minimum qualifications are:

(i) Certification as a laboratory director by a State in forensic or clinical laboratory toxicology; or

(ii) A Ph.D. in one of the natural sciences with an adequate undergraduate and graduate education in biology, chemistry, and pharmacology or toxicology; or

(iii) Training and experience comparable to a Ph.D. in one of the natural sciences, such as a medical or scientific degree with additional training and laboratory/research experience in biology, chemistry, and pharmacology or toxicology; and

(iv) In addition to the requirements in paragraph (a)(2) (i), (ii), or (iii) of this section, minimum qualifications also require:

(A) Appropriate experience in analytical forensic toxicology including experience with the analysis of biological material for drugs of abuse, and

(B) Appropriate training and/or experience in forensic applications of analytical toxicology, e.g., publications, court testimony, research concerning analytical toxicology of drugs of abuse, or other factors which qualify the individual as an expert witness in forensic toxicology.

(3) This individual shall be engaged in and responsible for the day-to-day management of the drug testing laboratory even where another individual has overall responsibility for an entire multi-specialty laboratory.

(4) This individual shall be responsible for ensuring that there are enough personnel with adequate training and experience to supervise and conduct the work of the drug testing laboratory. He or she shall assure the continued competency of laboratory personnel by documenting their in-service training, reviewing their work performance, and verifying their skills.

(5) This individual shall be responsible for the laboratory's having a procedure manual which is complete, up-to-date, available for personnel performing tests, and followed by those personnel. The procedure manual shall be reviewed, signed, and dated by this responsible individual whenever procedures are first placed into use or changed or when a new individual assumes responsibility for management of the drug testing laboratory. Copies of all procedures and dates on which they are in effect shall be maintained. (Specific contents of the procedure manual are described in §40.29(n)(1).)

(6) This individual shall be responsible for maintaining a quality assurance program to assure the proper performance and reporting of all test results; for maintaining acceptable analytical performance for all controls and standards; for maintaining quality control testing; and for assuring and documenting the validity, reliability, accuracy, precision, and performance characteristics of each test and test system.

(7) This individual shall be responsible for taking all remedial actions necessary to maintain satisfactory operation and performance of the laboratory in response to quality control systems not being within performance specifications, errors in result reporting or in analysis of performance testing results. This individual shall ensure that sample results are not reported until all corrective actions have been taken and he or she can assure that the tests results provided are accurate and reliable.

(b) *Test validation.* The laboratory's urine drug testing facility shall have a qualified individual(s) who reviews all pertinent data and quality control results in order to attest to the validity of the laboratory's test reports. A laboratory may designate more than one person to perform this function. This individual(s) may be any employee who is qualified to be responsible for day-to-day management or operation of the drug testing laboratory.

(c) *Day-to-day operations and supervision of analysts.* The laboratory's urine drug testing facility shall have an individual to be responsible for day-to-day operations and to supervise the technical analysts. This individual(s) shall have at least a bachelor's degree in the chemical or biological sciences or medical technology or equivalent. He or she shall have training and experience in the theory and practice of the

procedures used in the laboratory, resulting in his or her thorough understanding of quality control practices and procedures; the review, interpretation, and reporting of test results; maintenance of chain of custody; and proper remedial actions to be taken in response to test systems being out of control limits or detecting aberrant test or quality control results.

(d) *Other personnel.* Other technicians or nontechnical staff shall have the necessary training and skills for the tasks assigned.

(e) *Training.* The laboratory's urine drug testing program shall make available continuing education programs to meet the needs of laboratory personnel.

(f) *Files.* Laboratory personnel files shall include: resume of training and experience, certification or license if any; references; job descriptions; records of performance evaluation and advancement; incident reports; and results of tests which establish employee competency for the position he or she holds, such as a test for color blindness, if appropriate.

§ 40.29 Laboratory analysis procedures.

(a) *Security and chain of custody.* (1) Drug testing laboratories shall be secure at all times. They shall have in place sufficient security measures to control access to the premises and to ensure that no unauthorized personnel handle specimens or gain access to the laboratory process or to areas where records are stored. Access to these secured areas shall be limited to specifically authorized individuals whose authorization is documented. With the exception of personnel authorized to conduct inspections on behalf of Federal agencies for which the laboratory is engaged in urine testing or on behalf of DHHS, all authorized visitors and maintenance and service personnel shall be escorted at all times. Documentation of individuals accessing these areas, dates, and time of entry and purpose of entry must be maintained.

(2) Laboratories shall use chain of custody procedures to maintain control and accountability of specimens from receipt through completion of testing, reporting of results during storage, and continuing until final disposition of specimens. The date and purpose shall be documented on an appropriate chain of custody form each time a specimen is handled or transferred and every individual in the chain shall be identified. Accordingly, authorized technicians shall be responsible for each urine specimen or aliquot in their possession and shall sign and complete chain of custody forms for those specimens or aliquots as they are received.

(b) *Receiving.* (1)(i) When a shipment of specimens is received, laboratory personnel shall inspect each package for evidence of possible tampering and compare information on specimen bottles within each package to the information on the accompanying chain of custody forms. Any direct evidence of tampering or discrepancies in the information on specimen bottles and the employer's chain of custody forms attached to the shipment shall be immediately reported to the employer and shall be noted on the laboratory's chain of custody form which shall accompany the specimens while they are in the laboratory's possession.

(ii) Where the employer has used the split sample method, and the laboratory observes that the split specimen is untestable, inadequate, or unavailable for testing, the laboratory shall nevertheless test the primary specimen. The laboratory does not inform the MRO or the employer of the untestability, inadequacy, or unavailability of the split specimen until and unless the primary specimen is a verified positive test and the MRO has informed the laboratory that the employee has requested a test of the split specimen.

(2) In situations where the employer uses the split sample collection method, the laboratory shall log in the split specimen, with the split specimen bottle seal remaining intact. The laboratory shall store this sample securely (see paragraph (c) of this section). If the result of the test of the primary specimen is negative, the laboratory may discard the split specimen. If the result of the test of the primary specimen is positive, the laboratory shall retain the split specimen in frozen storage for 60 days from the date on which the laboratory acquires it (see

paragraph (h) of this section). Following the end of the 60-day period, if not informed by the MRO that the employee has requested a test of the split specimen, the laboratory may discard the split specimen.

(3) When directed in writing by the MRO to forward the split specimen to another DHHS-certified laboratory for analysis, the second laboratory shall analyze the split specimen by GC/MS to reconfirm the presence of the drug(s) or drug metabolite(s) found in the primary specimen. Such GC/MS confirmation shall be conducted without regard to the cutoff levels of §40.29(f). The split specimen shall be retained in long-term storage for one year by the laboratory conducting the analysis of the split specimen (or longer if litigation concerning the test is pending).

(c) *Short-term refrigerated storage.* Specimens that do not receive an initial test within 7 days of arrival at the laboratory shall be placed in secure refrigeration units. Temperatures shall not exceed 6°C. Emergency power equipment shall be available in case of prolonged power failure.

(d) *Specimen processing.* Laboratory facilities for urine drug testing will normally process specimens by grouping them into batches. The number of specimens in each batch may vary significantly depending on the size of the laboratory and its workload. When conducting either initial or confirmatory tests, every batch shall contain an appropriate number of standards for calibrating the instrumentation and a minimum of 10 percent controls. Both quality control and blind performance test samples shall appear as ordinary samples to laboratory analysts.

(e) *Initial test.* (1) The initial test shall use an immunoassay which meets the requirements of the Food and Drug Administration for commercial distribution. The following initial cutoff levels shall be used when screening specimens to determine whether they are negative for these five drugs or classes of drugs:

	Initial test cutoff levels (ng/ml)
Marijuana metabolites	50
Cocaine metabolites	300
Opiate metabolites	2000
Phencyclidine	25
Amphetamines	1,000

(2) These cutoff levels are subject to change by the Department of Health and Human Services as advances in technology or other considerations warrant identification of these substances at other concentrations.

(f) *Confirmatory test.* (1) All specimens identified as positive on the initial test shall be confirmed using gas chromatography/mass spectrometry (GC/MS) techniques at the cutoff levels listed in this paragraph for each drug. All confirmations shall be by quantitative analysis. Concentrations that exceed the linear region of the standard curve shall be documented in the laboratory record as ''greater than highest standard curve value.''

	Confirmatory test cutoff levels (ng/ml)
Marijuana metabolite [1]	15
Cocaine metabolite [2]	150
Opiates	
Morphine	2000
Codeine	2000
6-Acetylmorphine [4]	10 ng/ml.
Phencyclidine	25
Amphetamines:	
Amphetamine	500
Methamphetamine [3]	500

[1] Delta-9-tetrahydrocannabinol-9-carboxylic acid.
[2] Benzoylecgonine.
[3] Specimen must also contain amphetamine at a concentration greater than or equal to 200 ng/ml.
[4] Test for 6–AM when morphine concentration exceeds 2,000 ng/ml.

(2) These cutoff levels are subject to change by the Department of Health and Human Services as advances in technology or other considerations warrant identification of these substances at other concentrations.

(g) *Reporting results.* (1) The laboratory shall report test results to the employer's Medical Review Officer within an average of 5 working days after receipt of the specimen by the laboratory. Before any test result is reported (the results of initial tests, confirmatory tests, or quality control data), it shall be reviewed and the test certified as an accurate report by the responsible individual. The report shall identify the drugs/metabolites tested for,

whether positive or negative, the specimen number assigned by the employer, and the drug testing laboratory specimen identification number (accession number).

(2) The laboratory shall report as negative all specimens that are negative on the initial test or negative on the confirmatory test. Only specimens confirmed positive shall be reported positive for a specific drug.

(3) The Medical Review Officer may request from the laboratory and the laboratory shall provide quantitation of test results. The MRO shall report whether the test is positive or negative, and may report the drug(s) for which there was a positive test, but shall not disclose the quantitation of test results to the employer. *Provided*, that the MRO may reveal the quantitation of a positive test result to the employer, the employee, or the decision-maker in a lawsuit, grievance, or other proceeding initiated by or on behalf of the employee and arising from a verified positive drug test.

(4) The laboratory may transmit results to the Medical Review Officer by various electronic means (for example, teleprinters, facsimile, or computer) in a manner designed to ensure confidentiality of the information. Results may not be provided verbally by telephone. The laboratory and employer must ensure the security of the data transmission and limit access to any data transmission, storage, and retrieval system.

(5) The laboratory shall send only to the Medical Review Officer the original or a certified true copy of the drug testing custody and control form (part 2), which, in the case of a report positive for drug use, shall be signed (after the required certification block) by the individual responsible for day-to-day management of the drug testing laboratory or the individual responsible for attesting to the validity of the test reports, and attached to which shall be a copy of the test report.

(6) The laboratory shall provide the employer an aggregate quarterly statistical summary of urinalysis testing of the employer's employees. Laboratories may provide the report to a consortium provided that the laboratory provides employer-specific data and the consortium forwards the employer-specific data to the respective employers within 14 days of receipt of the laboratory report. The laboratory shall provide the report to the employer or consortium not more than 14 calendar days after the end of the quarter covered by the summary. Laboratory confirmation data only shall be included from test results reported within that quarter. The summary shall contain only the following information:

(i) Number of specimens received for testing;

(ii) Number of specimens confirmed positive for—

(A) Marijuana metabolite

(B) Cocaine metabolite

(C) Opiates;

(D) Phencyclidine;

(E) Amphetamines;

(iii) Number of specimens for which a test was not performed.

Quarterly reports shall not contain personal identifying information or other data from which it is reasonably likely that information about individuals' tests can be readily inferred. If necessary, in order to prevent disclosure of such data, the laboratory shall not send such a report until data are sufficiently aggregated to make such an inference unlikely. In any quarter in which a report is withheld for this reason, or because no testing was conducted, the laboratory shall so inform the consortium/employer in writing.

(7) The laboratory shall make available copies of all analytical results for employer drug testing programs when requested by DOT or any DOT agency with regulatory authority over the employer.

(8) Unless otherwise instructed by the employer in writing, all records pertaining to a given urine specimen shall be retained by the drug testing laboratory for a minimum of 2 years.

(h) *Long-term storage.* Long-term frozen storage (· 20°C or less) ensures that positive urine specimens will be available for any necessary retest during administrative or disciplinary proceedings. Drug testing laboratories shall retain and place in properly secured long-term frozen storage for a minimum of 1 year all specimens confirmed positive, in their original labeled specimen bottles. Within this 1-

year period, an employer (or other person designated in a DOT agency regulation) may request the laboratory to retain the specimen for an additional period of time, but if no such request is received the laboratory may discard the specimen after the end of 1 year, except that the laboratory shall be required to maintain any specimens known to be under legal challenge for an indefinite period.

(i) *Retesting specimens.* Because some analytes deteriorate or are lost during freezing and/or storage, quantitation for a retest is not subject to a specific cutoff requirement but must provide data sufficient to confirm the presence of the drug or metabolite.

(j) *Subcontracting.* Drug testing laboratories shall not subcontract and shall perform all work with their own personnel and equipment. The laboratory must be capable of performing testing for the five classes of drugs (marijuana, cocaine, opiates, phencyclidine and amphetamines) using the initial immunoassay and confirmatory GC/MS methods specified in this part. This paragraph does not prohibit subcontracting of laboratory analysis if specimens are sent directly from the collection site to the subcontractor, the subcontractor is a laboratory certified by DHHS as required in this part, the subcontractor performs all analysis and provides storage required under this part, and the subcontractor is responsible to the employer for compliance with this part and applicable DOT agency regulations as if it were the prime contractor.

(k) *Laboratory facilities.* (1) Laboratory facilities shall comply with applicable provisions of any State licensing requirements.

(2) Laboratories certified in accordance with DHHS Guidelines shall have the capability, at the same laboratory premises, of performing initial and confirmatory tests for each drug or metabolite for which service is offered.

(l) *Inspections.* The Secretary, a DOT agency, any employer utilizing the laboratory, DHHS or any organization performing laboratory certification on behalf of DHHS reserves the right to inspect the laboratory at any time. Employer contracts with laboratories for drug testing, as well as contracts for collection site services, shall permit the employer and the DOT agency of jurisdiction (directly or through an agent) to conduct unannounced inspections.

(m) *Documentation.* The drug testing laboratories shall maintain and make available for at least 2 years documentation of all aspects of the testing process. This 2 year period may be extended upon written notification by a DOT agency or by any employer for which laboratory services are being provided. The required documentation shall include personnel files on all individuals authorized to have access to specimens; chain of custody documents; quality assurance/quality control records; procedure manuals; all test data (including calibration curves and any calculations used in determining test results); reports; performance records on performance testing; performance on certification inspections; and hard copies of computer-generated data. The laboratory shall maintain documents for any specimen known to be under legal challenge for an indefinite period.

(n) *Additional requirements for certified laboratories.*—(1) *Procedure manual.* Each laboratory shall have a procedure manual which includes the principles of each test preparation of reagents, standards and controls, calibration procedures, derivation of results, linearity of methods, sensitivity of methods, cutoff values, mechanisms for reporting results, controls criteria for unacceptable specimens and results, remedial actions to be taken when the test systems are outside of acceptable limits, reagents and expiration dates, and references. Copies of all procedures and dates on which they are in effect shall be maintained as part of the manual.

(2) *Standards and controls.* Laboratory standards shall be prepared with pure drug standards which are properly labeled as to content and concentration. The standards shall be labeled with the following dates: when received; when prepared or opened; when placed in service; and expiration date.

(3) *Instruments and equipment.* (i) Volumetric pipettes and measuring devices shall be certified for accuracy or

be checked by gravimetric, colorimetric, or other verification procedure. Automatic pipettes and dilutors shall be checked for accuracy and reproducibility before being placed in service and checked periodically thereafter.

(ii) There shall be written procedures for instrument set-up and normal operation, a schedule for checking critical operating characteristics for all instruments, tolerance limits for acceptable function checks and instructions for major trouble shooting and repair. Records shall be available on preventive maintenance.

(4) *Remedial actions.* There shall be written procedures for the actions to be taken when systems are out of acceptable limits or errors are detected. There shall be documentation that these procedures are followed and that all necessary corrective actions are taken. There shall also be in place systems to verify all stages of testing and reporting and documentation that these procedures are followed.

(5) *Personnel available to testify at proceedings.* A laboratory shall have qualified personnel available to testify in an administrative or disciplinary proceeding against an employee when that proceeding is based on positive urinalysis results reported by the laboratory.

(6) The laboratory shall not enter into any relationship with an employer's MRO that may be construed as a potential conflict of interest or derive any financial benefit by having an employer use a specific MRO.

[54 FR 49866, Dec. 1, 1989, as amended at 59 FR 7356, Feb. 15, 1994; 59 FR 43001, Aug. 19, 1994; 63 FR 65129, Nov. 25, 1998]

§ 40.31 Quality assurance and quality control.

(a) *General.* Drug testing laboratories shall have a quality assurance program which encompasses all aspects of the testing process including but not limited to specimen acquisition, chain of custody security and reporting of results, initial and confirmatory testing and validation of analytical procedures. Quality assurance procedures shall be designed, implemented and reviewed to monitor the conduct of each step of the process of testing for drugs.

(b) *Laboratory quality control requirements for initial tests.* Each analytical run of specimens to be screened shall include:

(1) Urine specimens certified to contain no drug;

(2) Urine specimens fortified with known standards; and

(3) Positive controls with the drug or metabolite at or near the cutoff level.

In addition, with each batch of samples a sufficient number of standards shall be included to ensure and document the linearity of the assay method over time in the concentration area of the cutoff. After acceptable values are obtained for the known standards, those values will be used to calculate sample data. Implementation of procedures to ensure the carryover does not contaminate the testing of an individual's specimen shall be documented. A minimum of 10 percent of all test samples shall be quality control specimens. Laboratory quality control samples, prepared from spiked urine samples of determined concentration shall be included in the run and should appear as normal samples to laboratory analysts. One percent of each run, with a minimum of at least one sample, shall be the laboratory's own quality control samples.

(c) *Laboratory quality control requirements for confirmation tests.* Each analytical run of specimens to be confirmed shall include:

(1) Urine specimens certified to contain no drug;

(2) Urine specimens fortified with known standards; and

(3) Positive controls with the drug or metabolite at or near the cutoff level.

The linearity and precision of the method shall be periodically documented. Implementation of procedures to ensure that carryover does not contaminate the testing of an individual's specimen shall also be documented.

(d) *Employer blind performance test procedures.* (1) Each employer covered by DOT agency drug testing regulations shall use blind testing quality control procedures as provided in this paragraph.

(2) Each employer shall submit three blind performance test specimens for each 100 employee specimens it submits, up to a maximum of 100 blind performance test specimens submitted per quarter. A DOT agency may increase

this per quarter maximum number of samples if doing so is necessary to ensure adequate quality control of employers or consortiums with very large numbers of employees.

(3) For employers with 2000 or more covered employees, approximately 80 percent of the blind performance test samples shall be blank (i.e., containing no drug or otherwise as approved by a DOT agency) and the remaining samples shall be positive for one or more drugs per sample in a distribution such that all the drugs to be tested are included in approximately equal frequencies of challenge. The positive samples shall be spiked only with those drugs for which the employer is testing. This paragraph shall not be construed to prohibit spiking of other (potentially interfering) compounds, as technically appropriate, in order to verify the specificity of a particular assay.

(4) Employers with fewer than 2000 covered employees may submit blind performance test specimens as provided in paragraph (d)(3) of this section. Such employers may also submit only blank samples or may submit two separately labeled portions of a specimen from the same non-covered employee.

(5) Consortiums shall be responsible for the submission of blind samples on behalf of their members. The blind sampling rate shall apply to the total number of samples submitted by the consortium.

(6) The DOT agency concerned shall investigate, or shall refer to DHHS for investigation, any unsatisfactory performance testing result and, based on this investigation, the laboratory shall take action to correct the cause of the unsatisfactory performance test result. A record shall be made of the investigative findings and the corrective action taken by the laboratory, and that record shall be dated and signed by the individual responsible for the day-to-day management and operation of the drug testing laboratory. Then the DOT agency shall send the document to the employer as a report of the unsatisfactory performance testing incident. The DOT agency shall ensure notification of the finding to DHHS.

(7) Should a false positive error occur on a blind performance test specimen and the error is determined to be an administrative error (clerical, sample mixup, etc.), the employer shall promptly notify the DOT agency concerned. The DOT agency and the employer shall require the laboratory to take corrective action to minimize the occurrence of the particular error in the future, and, if there is reason to believe the error could have been systemic, the DOT agency may also require review and reanalysis of previously run specimens.

(8) Should a false positive error occur on a blind performance test specimen and the error is determined to be a technical or methodological error, the employer shall instruct the laboratory to submit all quality control data from the batch of specimens which included the false positive specimen to the DOT agency concerned. In addition, the laboratory shall retest all specimens analyzed positive for that drug or metabolite from the time of final resolution of the error back to the time of the last satisfactory performance test cycle. This retesting shall be documented by a statement signed by the individual responsible for day-to-day management of the laboratory's urine drug testing. The DOT agency concerned may require an on-site review of the laboratory which may be conducted unannounced during any hours of operation of the laboratory. Based on information provided by the DOT agency, DHHS has the option of revoking or suspending the laboratory's certification or recommending that no further action be taken if the case is one of less serious error in which corrective action has already been taken, thus reasonably assuring that the error will not occur again.

§40.33 Reporting and review of results.

(a) *Medical review officer shall review confirmed positive results.* (1) An essential part of the drug testing program is the final review of confirmed positive results from the laboratory. A positive test result does not automatically identify an employee/applicant as having used drugs in violation of a DOT agency regulation. An individual with

a detailed knowledge of possible alternate medical explanations is essential to the review of results. This review shall be performed by the Medical Review Officer (MRO) prior to the transmission of the results to employer administrative officials. The MRO review shall include review of the chain of custody to ensure that it is complete and sufficient on its face.

(2) The duties of the MRO with respect to negative results are purely administrative.

(b) *Medical review officer—qualifications and responsibilities.* (1) The MRO shall be a licensed physician with knowledge of substance abuse disorders and may be an employee of a transportation employer or a private physician retained for this purpose.

(2) [Reserved]

(3) The role of the MRO is to review and interpret confirmed positive test results obtained through the employer's testing program. In carrying out this responsibility, the MRO shall examine alternate medical explanations for any positive test result. This action may include conducting a medical interview and review of the individual's medical history, or review of any other relevant biomedical factors. The MRO shall review all medical records made available by the tested individual when a confirmed positive test could have resulted from legally prescribed medication. The MRO shall not, however, consider the results or urine samples that are not obtained or processed in accordance with this part.

(c) *Positive test result.* (1) Prior to making a final decision to verify a positive test result for an individual, the MRO shall give the individual an opportunity to discuss the test result with him or her.

(2) The MRO shall contact the individual directly, on a confidential basis, to determine whether the employee wishes to discuss the test result. A staff person under the MRO's supervision may make the initial contact, and a medically licensed or certified staff person may gather information from the employee. Except as provided in paragraph (c)(5) of this section, the MRO shall talk directly with the employee before verifying a test as positive.

(3) If, after making all reasonable efforts and documenting them, the MRO is unable to reach the individual directly, the MRO shall contact a designated management official who shall direct the individual to contact the MRO as soon as possible. If it becomes necessary to reach the individual through the designated management official, the designated management official shall employ procedures that ensure, to the maximum extent practicable, the requirement that the employee contact the MRO is held in confidence.

(4) If, after making all reasonable efforts, the designated management official is unable to contact the employee, the employer may place the employee on temporary medically unqualified status or medical leave.

(5) The MRO may verify a test as positive without having communicated directly with the employee about the test in three circumstances:

(i) The employee expressly declines the opportunity to discuss the test;

(ii) Neither the MRO nor the designated employer representative, after making all reasonable efforts, has been able to contact the employee within 14 days of the date on which the MRO receives the confirmed positive test result from the laboratory;

(iii) The designated employer representative has successfully made and documented a contact with the employee and instructed the employee to contact the MRO (see paragraphs (c)(3) and (c)(4) of this section), and more than five days have passed since the date the employee was successfully contacted by the designated employer representative.

(6) If a test is verified positive under the circumstances specified in paragraph (c)(5) (ii) or (iii) of this section, the employee may present to the MRO information documenting that serious illness, injury, or other circumstances unavoidably prevented the employee from being contacted by the MRO or designated employer representative (paragraph (c)(5)(ii) of this section) or from contacting the MRO (paragraph (c)(5)(iii) of this section) within the times provided. The MRO, on the basis of such information, may reopen the verification, allowing the employee to

present information concerning a legitimate explanation for the confirmed positive test. If the MRO concludes that there is a legitimate explanation, the MRO declares the test to be negative.

(7) Following verification of a positive test result, the MRO shall, as provided in the employer's policy, refer the case to the employer's employee assistance or rehabilitation program, if applicable, to the management official empowered to recommend or take administrative action (or the official's designated agent), or both.

(d) *Verification for opiates; review for prescription medication.* Before the MRO verifies a confirmed positive result for opiates, he or she shall determine that there is clinical evidence—in addition to the urine test—of unauthorized use of any opium, opiate, or opium derivative (e.g., morphine/codeine). (This requirement does not apply if the employer's GC/MS confirmation testing for opiates confirms the presence of 6-monoacetylmorphine.)

(e) In a situation in which the employer has used the single sample method of collection, the MRO shall notify each employee who has a confirmed positive test that the employee has 72 hours in which to request a reanalysis of the original specimen, if the test is verified positive. If requested to do so by the employee within 72 hours of the employee's having been informed of a verified positive test, the Medical Review Officer shall direct, in writing, a reanalysis of the original sample. The MRO may also direct, in writing, such a reanalysis if the MRO questions the accuracy or validity of any test result. Only the MRO may authorize such a reanalysis, and such a reanalysis may take place only at laboratories certified by DHHS. If the reanalysis fails to reconfirm the presence of the drug or drug metabolite, the MRO shall cancel the test and report the cancellation and the reasons for it to the DOT, the employer and the employee.

(f)(1) In situations in which the employer uses the split sample method of collection, the MRO shall notify each employee who has a confirmed positive test that the employee has 72 hours in which to request a test of the split specimen, if the test is verified as positive. If the employee requests an analysis of the split specimen within 72 hours of having been informed of a verified positive test, the MRO shall direct, in writing, the laboratory to provide the split specimen to another DHHS-certified laboratory for analysis. If the analysis of the split specimen fails to reconfirm the presence of the drug(s) or drug metabolite(s) found in the primary specimen, or if the split specimen is unavailable, inadequate for testing or untestable, the MRO shall cancel the test and report cancellation and the reasons for it to the DOT, the employer, and the employee.

(2) If the analysis of the split specimen is reconfirmed by the second laboratory for the presence of the drug(s) or drug metabolites(s), the MRO shall notify the employer and employee of the results of the test.

(g) If an employee has not contacted the MRO within 72 hours, as provided in paragraphs (e) and (f) of this section, the employee may present to the MRO information documenting that serious illness, injury, inability to contact the MRO, lack of actual notice of the verified positive test, or other circumstances unavoidably prevented the employee from timely contacting the MRO. If the MRO concludes that there is a legitimate explanation for the employee's failure to contact the MRO within 72 hours, the MRO shall direct that the reanalysis of the primary specimen or analysis of the split specimen, as applicable, be performed.

(h) When the employer uses the split sample method of collection, the employee is not authorized to request a reanalysis of the primary specimen as provided in paragraph (e) of this section.

(i) *Disclosure of information.* Except as provided in this paragraph, the MRO shall not disclose to any third party medical information provided by the individual to the MRO as a part of the testing verification process.

(1) The MRO may disclose such information to the employer, a DOT agency or other Federal safety agency, or a physician responsible for determining the medical qualification of the employee under an applicable DOT agency regulation, as applicable, only if—

(i) An applicable DOT regulation permits or requires such disclosure;

(ii) In the MRO's reasonable medical judgment, the information could result in the employee being determined to be medically unqualified under an applicable DOT agency rule; or

(iii) In the MRO's reasonable medical judgment, in a situation in which there is no DOT agency rule establishing physical qualification standards applicable to the employee, the information indicates that continued performance by the employee of his or her safety-sensitive function could pose a significant safety risk.

(2) Before obtaining medical information from the employee as part of the verification process, the MRO shall inform the employee that information may be disclosed to third parties as provided in this paragraph and the identity of any parties to whom information may be disclosed.

[54 FR 49866, Dec. 1, 1989, as amended at 59 FR 7356, Feb. 15, 1994; 61 FR 37699, July 19, 1996]

§ 40.35 Protection of employee records.

Employer contracts with laboratories shall require that the laboratory maintain employee test records in confidence, as provided in DOT agency regulations. The contracts shall provide that the laboratory shall disclose information related to a positive drug test of an individual to the individual, the employer, or the decisionmaker in a lawsuit, grievance, or other proceeding initiated by or on behalf of the individual and arising from a certified positive drug test.

§ 40.37 Individual access to test and laboratory certification results.

Any employee who is the subject of a drug test conducted under this part shall, upon written request, have access to any records relating to his or her drug test and any records relating to the results of any relevant certification, review, or revocation-of-certification proceedings.

§ 40.39 Use of certified laboratories.

(a) Except as provided in paragraph (b) of this section, employers subject to this part shall use only laboratories certified under the DHHS ''Mandatory Guidelines for Federal Workplace Drug Testing Programs,'' April 11, 1988, and subsequent amendments thereto.

(b) Employers subject to this part may also use laboratories located outside the United States if—

(1) The Department of Transportation, based on a written recommendation from DHHS, has certified the laboratory as meeting DHHS laboratory certification standards or deemed the laboratory fully equivalent to a laboratory meeting DHHS laboratory certification standards; or

(2) The Department of Transportation, based on a written recommendation from DHHS, has recognized a foreign certifying organization as having equivalent laboratory certification standards and procedures to those of DHHS, and the foreign certifying organization has certified the laboratory, pursuant to those equivalent standards and procedures.

[61 FR 37016, July 16, 1996]

Subpart C—Alcohol Testing

SOURCE: 59 FR 7357, Feb. 15, 1994, unless otherwise noted.

§ 40.51 The breath alcohol technician.

(a) The breath alcohol technician (BAT) shall be trained to proficiency in the operation of the EBT he or she is using and in the alcohol testing procedures of this part.

(1) Proficiency shall be demonstrated by successful completion of a course of instruction which, at a minimum, provides training in the principles of EBT methodology, operation, and calibration checks; the fundamentals of breath analysis for alcohol content; and the procedures required in this part for obtaining a breath sample, and interpreting and recording EBT results.

(2) Only courses of instruction for operation of EBTs that are equivalent to the Department of Transportation model course, as determined by the National Highway Traffic Safety Administration (NHTSA), may be used to train BATs to proficiency. On request, NHTSA will review a BAT instruction course for equivalency.

(3) The course of instruction shall provide documentation that the BAT has demonstrated competence in the operation of the specific EBT(s) he/she will use.

(4) Any BAT who will perform an external calibration check of an EBT shall be trained to proficiency in conducting the check on the particular model of EBT, to include practical experience and demonstrated competence in preparing the breath alcohol simulator or alcohol standard, and in maintenance and calibration of the EBT.

(5) The BAT shall receive additional training, as needed, to ensure proficiency, concerning new or additional devices or changes in technology that he or she will use.

(6) The employer or its agent shall establish documentation of the training and proficiency test of each BAT it uses to test employees, and maintain the documentation as provided in §40.83.

(b) A BAT-qualified supervisor of an employee may conduct the alcohol test for that employee only if another BAT is unavailable to perform the test in a timely manner. A supervisor shall not serve as a BAT for the employee in any circumstance prohibited by a DOT operating administration regulation.

(c) Law enforcement officers who have been certified by state or local governments to conduct breath alcohol testing are deemed to be qualified as BATs. In order for a test conducted by such an officer to be accepted under Department of Transportation alcohol testing requirements, the officer must have been certified by a state or local government to use the EBT or non-evidential alcohol screening device that was used for the test.

[59 FR 7357, Feb. 15, 1994, as amended at 60 FR 19679, Apr. 20, 1995]

§40.53 Devices to be used for breath alcohol tests.

(a) For screening tests, employers shall use only EBTs. When the employer uses for a screening test an EBT that does not meet the requirements of paragraphs (b) (1) through (3) of this section, the employer shall use a log book in conjunction with the EBT (see §40.59(c)).

(b) For confirmation tests, employers shall use EBTs that meet the following requirements:

(1) EBTs shall have the capability of providing, independently or by direct link to a separate printer, a printed result in triplicate (or three consecutive identical copies) of each breath test and of the operations specified in paragraphs (b) (2) and (3) of this section.

(2) EBTs shall be capable of assigning a unique and sequential number to each completed test, with the number capable of being read by the BAT and the employee before each test and being printed out on each copy of the result.

(3) EBTs shall be capable of printing out, on each copy of the result, the manufacturer's name for the device, the device's serial number, and the time of the test.

(4) EBTs shall be able to distinguish alcohol from acetone at the 0.02 alcohol concentration level.

(5) EBTs shall be capable of the following operations:

(i) Testing an air blank prior to each collection of breath; and

(ii) Performing an external calibration check.

§40.55 Quality assurance plans for EBTs.

(a) In order to be used in either screening or confirmation alcohol testing subject to this part, an EBT shall have a quality assurance plan (QAP) developed by the manufacturer.

(1) The plan shall designate the method or methods to be used to perform external calibration checks of the device, using only calibration devices on the NHTSA ''Conforming Products List of Calibrating Units for Breath Alcohol Tests.''

(2) The plan shall specify the minimum intervals for performing external calibration checks of the device. Intervals shall be specified for different frequencies of use, environmental conditions (*e.g.*, temperature, altitude, humidity), and contexts of operation (*e.g.*, stationary or mobile use).

(3) The plan shall specify the tolerances on an external calibration check within which the EBT is regarded to be in proper calibration.

(4) The plan shall specify inspection, maintenance, and calibration requirements and intervals for the device.

(5) For a plan to be regarded as valid, the manufacturer shall have submitted the plan to NHTSA for review and have received NHTSA approval of the plan.

(b) The employer shall comply with the NHTSA-approved quality assurance plan for each EBT it uses for alcohol screening or confirmation testing subject to this part.

(1) The employer shall ensure that external calibration checks of each EBT are performed as provided in the QAP.

(2) The employer shall take an EBT out of service if any external calibration check results in a reading outside the tolerances for the EBT set forth in the QAP. The EBT shall not again be used for alcohol testing under this part until it has been serviced and has had an external calibration check resulting in a reading within the tolerances for the EBT.

(3) The employer shall ensure that inspection, maintenance, and calibration of each EBT are performed by the manufacturer or a maintenance representative certified by the device's manufacturer or a state health agency or other appropriate state agency. The employer shall also ensure that each BAT or other individual who performs an external calibration check of an EBT used for alcohol testing subject to this part has demonstrated proficiency in conducting such a check of the model of EBT in question.

(4) The employer shall maintain records of the external calibration checks of EBTs as provided in § 40.83.

(c) When the employer is not using the EBT at an alcohol testing site, the employer shall store the EBT in a secure space.

§ 40.57 Locations for breath alcohol testing.

(a) Each employer shall conduct alcohol testing in a location that affords visual and aural privacy to the individual being tested, sufficient to prevent unauthorized persons from seeing or hearing test results. All necessary equipment, personnel, and materials for breath testing shall be provided at the location where testing is conducted.

(b) An employer may use a mobile collection facility (*e.g.*, a van equipped for alcohol testing) that meets the requirements of paragraph (a) of this section.

(c) No unauthorized persons shall be permitted access to the testing location when the EBT remains unsecured or, in order to prevent such persons from seeing or hearing a testing result, at any time when testing is being conducted.

(d) In unusual circumstances (*e.g.*, when it is essential to conduct a test outdoors at the scene of an accident), a test may be conducted at a location that does not fully meet the requirements of paragraph (a) of this section. In such a case, the employer or BAT shall provide visual and aural privacy to the employee to the greatest extent practicable.

(e) The BAT shall supervise only one employee's use of the EBT at a time. The BAT shall not leave the alcohol testing location while the testing procedure for a given employee (see §§ 40.61 through 40.65) is in progress.

§ 40.59 The breath alcohol testing form.

(a) Each employer shall use the breath alcohol testing form prescribed under this part. The form is found in appendix A to this subpart. Employers may not modify or revise this form, except that a form directly generated by an EBT may omit the space for affixing a separate printed result to the form.

(b) The form shall provide triplicate (or three consecutive identical) copies. Copy 1 (white) shall be transmitted to the employer. Copy 2 (green) shall be provided to the employee. Copy 3 (blue) shall be retained by the BAT. Except for a form generated by an EBT, the form shall be 8½ by 11 inches in size.

[59 FR 7357, Feb. 15, 1994, as amended at 59 FR 43001, Aug. 19, 1994; 60 FR 19679, Apr. 20, 1995]

§ 40.61 Preparation for breath alcohol testing.

(a) When the employee enters the alcohol testing location, the BAT will require him or her to provide positive identification (*e.g.*, through use of a

photo I.D. card or identification by an employer representative). On request by the employee, the BAT shall provide positive identification to the employee.

(b) The BAT shall explain the testing procedure to the employee.

§40.63 Procedures for screening tests.

(a) The BAT shall complete Step 1 on the Breath Alcohol Testing Form. The employee shall then complete Step 2 on the form, signing the certification. Refusal by the employee to sign this certification shall be regarded as a refusal to take the test.

(b) An individually-sealed mouthpiece shall be opened in view of the employee and BAT and attached to the EBT in accordance with the manufacturer's instructions.

(c) The BAT shall instruct the employee to blow forcefully into the mouthpiece for at least 6 seconds or until the EBT indicates that an adequate amount of breath has been obtained.

(d)(1) If the EBT does not meet the requirements of §40.53(b) (1) through (3), the BAT shall ensure, before a screening test is administered to each employee, that he or she and the employee read the sequential test number displayed on the EBT. The BAT shall record the displayed result, test number, testing device, serial number of the testing device, and time in Step # of the form.

(2) If the EBT does not meet the requirements of §40.53(b)(1) through (3), the BAT and the employee shall take the following steps:

(i) Show the employee the result displayed on the EBT. The BAT shall record the displayed result, test number, testing device, serial number of the testing device, time and quantified result in Step 3 of the form.

(ii) Record the test number, date of the test, name of the BAT, location, and quantified test result in the log book. The employee shall initial the log book entry.

(3) If the EBT provides a printed result, but does not print the results directly onto the form, the BAT shall show the employee the result displayed on the EBT. The BAT shall then affix the test result printout to the breath alcohol test form in the designated space, using a method that will provide clear evidence of removal (*e.g.*, tamper-evident tape).

(4) If the EBT prints the test results directly onto the form, the BAT shall show the employee the result displayed on the EBT.

(e)(1) In any case in which the result of the screening test is a breath alcohol concentration of less than 0.02, the BAT shall date the form and sign the certification in Step 3 of the form. The employee shall sign the certification and fill in the date in Step 4 of the form.

(2) No further testing is authorized. The BAT shall transmit the result of less than 0.02 to the employer in a confidential manner, and the employer shall receive and store the information so as to ensure that confidentiality is maintained as required by §40.81.

(3) If the employee does not sign the certification in Step 4 of the form for a test, it shall not be considered a refusal to be tested. In this event, the BAT shall note the employee's failure to sign in the ''Remarks'' section of the form.

(4) If a test result printed by the EBT (see paragraph (d)(3) or (d)(4) of this section) does not match the displayed result, or if a sequential test number printed by the EBT does not match the sequential test number displayed by the EBT prior to the screening test (see paragraph (d)(1) of this section), the BAT shall note the disparity in the ''Remarks'' section. Both the employee and the BAT shall initial and sign the notation. In accordance with §40.79, the test is invalid and the employee shall be so advised.

(f) If the result of the screening test is an alcohol concentration of 0.02 or greater, a confirmation test shall be performed as provided in §40.65.

(g) If the confirmation test will be conducted by a different BAT, the BAT who conducts the screening test shall complete and sign the form and log book entry. The BAT will provide the employee with Copy 2 of the form.

(h) If the confirmation test will be conducted at a different site from the screening test, the employer or its agent shall ensure that—

(1) The employee is advised against taking any of the actions mentioned in

the first sentence of § 40.65(b) of this part;

(2) The employee is advised that he or she must not drive, perform safety-sensitive duties, or operate heavy equipment, as noted in Block 4 of the alcohol testing form; and

(3) The employee is under observation of a BAT, STT, or other employer personnel while in transit from the screening test site to the confirmation test site.

[59 FR 7357, Feb. 15, 1994, as amended at 59 FR 43001, Aug. 19, 1994; 60 FR 19679, Apr. 20, 1995]

§ 40.65 Procedures for confirmation tests.

(a) If a BAT other than the one who conducted the screening test is conducting the confirmation test, the new BAT shall follow the procedures of § 40.61.

(b) The BAT shall instruct the employee not to eat, drink, put any object or substance in his or her mouth, and, to the extent possible, not belch during a waiting period before the confirmation test. This time period begins with the completion of the screening test, and shall not be less than 15 minutes. The confirmation test shall be conducted within 30 minutes of the completion of the screening test. The BAT shall explain to the employee the reason for this requirement (*i.e.,* to prevent any accumulation of mouth alcohol leading to an artificially high reading) and the fact that it is for the employee's benefit. The BAT shall also explain that the test will be conducted at the end of the waiting period, even if the employee has disregarded the instruction. If the BAT becomes aware that the employee has not complied with this instruction, the BAT shall so note in the ''Remarks'' section of the form. If the BAT conducts the confirmation test more than 30 minutes after the result of the screening test has been obtained, the BAT shall note in the ''Remarks'' section of the form the time that elapsed between the screening and confirmation tests and the reason why the confirmation test could not be conducted within 30 minutes of the screening test.

(c)(1) If a BAT other than the one who conducted the screening test is conducting the confirmation test, the new BAT shall initiate a new Breath Alcohol Testing form. The BAT shall complete Step 1 on the form. The employee shall then complete Step 2 on the form, signing the certification. Refusal by the employee to sign this certification shall be regarded as a refusal to take the test. The BAT shall note in the ''Remarks'' section of the form that a different BAT conducted the screening test.

(2) In all cases, the procedures of § 40.63 (a), (b), and (c) shall be followed. A new mouthpiece shall be used for the confirmation test.

(d) Before the confirmation test is administered for each employee, the BAT shall ensure that the EBT registers 0.00 on an air blank. If the reading is greater than 0.00, the BAT shall conduct one more air blank. If the reading is greater than 0.00, testing shall not proceed using that instrument, which shall be taken out of service. However, testing may proceed on another instrument. Any EBT taken out of service because of failure to perform an air blank accurately shall not be used for testing until a check of external calibration is completed and the EBT is found to be within tolerance limits.

(e) Before the confirmation test is administered for each employee, the BAT shall ensure that he or she and the employee read the sequential test number displayed by the EBT.

(f) In the event that the screening and confirmation test results are not identical, the confirmation test result is deemed to be the final result upon which any action under operating administration rules shall be based.

(g)(1) If the EBT provides a printed result, but does not print the results directly onto the form, the BAT shall show the employee the result displayed on the EBT. The BAT shall then affix the test result printout to the breath alcohol test form in the designated space, using a method that will provide clear evidence of removal (*e.g.,* tamper-evident tape).

(2) If the EBT prints the test results directly onto the form, the BAT shall show the employee the result displayed on the EBT.

(h)(1) Following the completion of the test, the BAT shall date the form and sign the certification in Step 3 of the form. The employee shall sign the certification and fill in the date in Step 4 of the form.

(2) If the employee does not sign the certification in Step 4 of the form, it shall not be considered a refusal to be tested. In this event, the BAT shall note the employee's failure to sign in the ''Remarks'' section.

(3) If a test result printed by the EBT (see paragraph (g)(1) or (g)(2) of this section) does not match the displayed result, or if a sequential test number printed by the EBT does not match the sequential test number displayed by the EBT prior to the confirmation test (see paragraph (e) of this section), the BAT shall note the disparity in the ''Remarks'' section. Both the employee and the BAT shall initial and sign the notation. In accordance with §40.79, the test is invalid and the employee shall be so advised.

(i) The BAT shall transmit all results to the employer in a confidential manner.

(1) Each employer shall designate one or more employer representatives for the purpose of receiving and handling alcohol testing results in a confidential manner. All communications by BATs to the employer concerning the alcohol testing results of employees shall be to a designated employer representative.

(2) Such transmission may be in writing (the employer copy (Copy 1) of the breath alcohol testing form), in person or by telephone or electronic means, but the BAT shall ensure immediate transmission to the employer of results that require the employer to prevent the employee from performing a safety-sensitive function.

(3) If the initial transmission is not in writing (e.g., by telephone), the employer shall establish a mechanism to verify the identity of the BAT providing the information.

(4) If the initial transmission is not in writing, the BAT shall follow the initial transmission by providing to the employer the employer's copy of the breath alcohol testing form. The employer shall store the information so as to ensure that confidentiality is maintained as required by §40.81.

[59 FR 7357, Feb. 15, 1994, as amended at 59 FR 43002, Aug. 19, 1994; 60 FR 19679, Apr. 20, 1995]

§40.67 Refusals to test and uncompleted tests.

(a) Refusal by an employee to complete and sign the breath alcohol testing form (Step 2), to provide breath, to provide an adequate amount of breath, or otherwise to cooperate with the testing process in a way that prevents the completion of the test, shall be noted by the BAT in the remarks section of the form. The testing process shall be terminated and the BAT shall immediately notify the employer.

(b) If a screening or confirmation test cannot be completed, or if an event occurs that would invalidate the test, the BAT shall, if practicable, begin a new screening or confirmation test, as applicable, using a new breath alcohol testing form with a new sequential test number (in the case of a screening test conducted on an EBT that meets the requirements of §40.53(b) or in the case of a confirmation test).

§40.69 Inability to provide an adequate amount of breath.

(a) This section sets forth procedures to be followed in any case in which an employee is unable, or alleges that he or she is unable, to provide an amount of breath sufficient to permit a valid breath test because of a medical condition.

(b) The BAT shall again instruct the employee to attempt to provide an adequate amount of breath. If the employee refuses to make the attempt, the BAT shall immediately inform the employer.

(c) If the employee attempts and fails to provide an adequate amount of breath, the BAT shall so note in the ''Remarks'' section of the breath alcohol testing form and immediately inform the employer.

(d) If the employee attempts and fails to provide an adequate amount of breath, the employer shall proceed as follows:

(1) [Reserved]

(2) The employer shall direct the employee to obtain, as soon as practical

after the attempted provision of breath, an evaluation from a licensed physician who is acceptable to the employer concerning the employee's medical ability to provide an adequate amount of breath.

(i) If the physician determines, in his or her reasonable medical judgment, that a medical condition has, or with a high degree of probability, could have, precluded the employee from providing an adequate amount of breath, the employee's failure to provide an adequate amount of breath shall not be deemed a refusal to take a test. The physician shall provide to the employer a written statement of the basis for his or her conclusion.

(ii) If the licensed physician, in his or her reasonable medical judgment, is unable to make the determination set forth in paragraph (d)(2)(i) of this section the employee's failure to provide an adequate amount of breath shall be regarded as a refusal to take a test. The licensed physician shall provide a written statement of the basis for his or her conclusion to the employer.

§§ 40.71–40.77 [Reserved]

§ 40.79 Invalid tests.

(a) A breath alcohol test shall be invalid under the following circumstances:

(1) The next external calibration check of an EBT produces a result that differs by more than the tolerance stated in the QAP from the known value of the test standard. In this event, every test result of 0.02 or above obtained on the device since the last valid external calibration check shall be invalid;

(2) The BAT does not observe the minimum 15-minute waiting period prior to the confirmation test, as provided in § 40.65(b);

(3) The BAT does not perform an air blank of the EBT before a confirmation test, or an air blank does not result in a reading of 0.00 prior to the administration of the test, as provided in § 40.65;

(4) The BAT does not sign the form as required by §§ 40.63 and 40.65;

(5) The BAT has failed to note on the remarks section of the form that the employee has failed or refused to sign the form following the recording or printing on or attachment to the form of the test result;

(6) An EBT fails to print a confirmation test result; or

(7) On a confirmation test and, where applicable, on a screening test, the sequential test number or alcohol concentration displayed on the EBT is not the same as the sequential test number or alcohol concentration on the printed result.

(b) [Reserved]

[59 FR 7357, Feb. 15, 1994, as amended at 59 FR 43002, Aug. 19, 1994]

§ 40.81 Availability and disclosure of alcohol testing information about individual employees.

(a) Employers shall maintain records in a secure manner, so that disclosure of information to unauthorized persons does not occur.

(b) Except as required by law or expressly authorized or required in this section, no employer shall release covered employee information that is contained in the records required to be maintained by this part or by DOT agency alcohol misuse rules.

(c) An employee subject to testing is entitled, upon written request, to obtain copies of any records pertaining to the employee's use of alcohol, including any records pertaining to his or her alcohol tests. The employer shall promptly provide the records requested by the employee. Access to an employee's records shall not be contingent upon payment for records other than those specifically requested.

(d) Each employer shall permit access to all facilities utilized in complying with the requirements of this part and DOT agency alcohol misuse rules to the Secretary of Transportation, any DOT agency with regulatory authority over the employer, or a state agency with regulatory authority over the employer (as authorized by DOT agency regulations).

(e) When requested by the Secretary of Transportation, any DOT agency with regulatory authority over the employer, or a state agency with regulatory authority over the employer (as authorized by DOT agency regulations), each employer shall make available copies of all results for employer

alcohol testing conducted under the requirements of this part and any other information pertaining to the employer's alcohol misuse prevention program. The information shall include name-specific alcohol test results, records and reports.

(f) When requested by the National Transportation Safety Board as part of an accident investigation, an employer shall disclose information related to the employer's administration of any post-accident alcohol tests administered following the accident under investigation.

(g) An employer shall make records available to a subsequent employer upon receipt of a written request from a covered employee. Disclosure by the subsequent employer is permitted only as expressly authorized by the terms of the employee's written request.

(h) An employer may disclose information required to be maintained under this part pertaining to a covered employee to that employee or to the decisionmaker in a lawsuit, grievance, or other proceeding initiated by or on behalf of the individual, and arising from the results of an alcohol test administered under the requirements of this part, or from the employer's determination that the employee engaged in conduct prohibited by a DOT agency alcohol misuse regulation (including, but not limited to, a worker's compensation, unemployment compensation, or other proceeding relating to a benefit sought by the employee).

(i) An employer shall release information regarding a covered employee's records as directed by the specific, written consent of the employee authorizing release of the information to an identified person. Release of such information is permitted only in accordance with the terms of the employee's consent.

§40.83 Maintenance and disclosure of records concerning EBTs and BATs.

(a) Each employer or its agent shall maintain the following records for two years:

(1) Records of the inspection and maintenance of each EBT used in employee testing;

(2) Documentation of the employer's compliance with the QAP for each EBT it uses for alcohol testing under this part;

(3) Records of the training and proficiency testing of each BAT used in employee testing;

(4) The log books required by §40.59(c).

(b) Each employer or its agent shall maintain for five years records pertaining to the calibration of each EBT used in alcohol testing under this part, including records of the results of external calibration checks.

(c) Records required to be maintained by this section shall be disclosed on the same basis as provided in §40.81.

Subpart D—Non-Evidential Alcohol Screening Devices

SOURCE: 60 FR 19679, Apr. 20, 1995, unless otherwise noted.

§40.91 Authorization for use of non-evidential alcohol screening devices.

Non-evidential alcohol screening tests, performed using screening devices included by the National Highway Traffic Safety Administration on its conforming products list for non-evidential screening devices, may be used in lieu of EBTs to perform screening tests required by operating administrations' alcohol testing regulations. Non-evidential screening devices may not be used for confirmation alcohol tests, which must be conducted using EBTs as provided in subpart C of this part.

§40.93 The screening test technician.

(a) Anyone meeting the requirements of this part to be a BAT may act as a screening test technician (STT), provided that the individual has demonstrated proficiency in the operation of the non-evidential screening device he or she is using.

(b) Any other individual may act as an STT if he or she successfully completes a course of instruction concerning the procedures required by this part for conducting alcohol screening tests. Only the Department of Transportation model course, or a course of instruction determined by the Department of Transportation's Office of Drug Enforcement and Program Compliance to be equivalent to it, may be used for this purpose.

(c) With respect to any non-evidential screening device involving changes, contrasts, or other readings that are indicated on the device in terms of color, STTs shall, in order to be regarded as proficient, be able to discern correctly these changes, contrasts or readings.

(d) The STT shall receive additional training, as needed, to ensure proficiency, concerning new or additional devices or changes in technology that he or she will use.

(e) The employer or its agent shall document the training and proficiency of each STT it uses to test employees and maintain the documentation as provided in § 40.83.

(f) The provisions of § 40.51(b) and (c); § 40.57; § 40.59; § 40.61; § 40.63 (e)(1)–(2), (f), (g), and (h); § 40.69; and § 40.81; and other provisions, as applicable, of this part apply to STTs as well as to BATs.

§ 40.95 Quality assurance plans for non-evidential screening devices.

(a) In order to be used for alcohol screening tests subject to this part, a non-evidential screening device shall have an approved quality assurance plan (QAP) developed by the manufacturer and approved by the National Highway Traffic Safety Administration (NHTSA).

(1) The plan shall designate the method or methods to be used to perform quality control checks; the temperatures at which the non-evidential screening device shall be stored and used, as well as other environmental conditions (*e.g.*, altitude, humidity) that may affect the performance of the device; and, where relevant, the shelf life of the device.

(2) The QAP shall prohibit the use of any device that does not pass the specified quality control checks or that has passed its expiration date.

(b) The manufacturers' instructions on or included in the package for each saliva testing device shall include directions on the proper use of the device, the time frame within which the device must be read and the manner in which the reading is made.

(c) The employer and its agents shall comply with the QAP and manufacturer's instructions for each non-evidential screening device it uses for alcohol screening tests subject to this Part.

§ 40.97 Locations for non-evidential alcohol screening tests.

(a) Locations for non-evidential alcohol screening tests shall meet the same requirements set forth for breath alcohol testing in § 40.57 of this part.

(b) The STT shall supervise only one employee's use of a non-evidential screening device at a time. The STT shall not leave the alcohol testing location while the screening test procedure for a given employee is in progress.

§ 40.99 Testing forms.

STTs conducting tests using a non-evidential screening device shall use the alcohol testing form as provided in § 40.59 and appendix B of this part for the screening test.

§ 40.101 Screening test procedure.

(a) The steps for preparation for testing shall be the same as provided for breath alcohol testing in § 40.61 of this part.

(b) The STT shall complete Step 1 on the form required by § 40.99. The employee shall then complete Step 2 on the form, signing the certification. Refusal by the employee to sign this certification shall be regarded as a refusal to take the test.

(c) If the employer is using a non-evidential breath testing device, the STT shall follow the same steps outlined for screening tests using EBTs in § 40.63.

(d) If the employer is using a saliva testing device, the STT shall take the following steps:

(1) The STT shall explain the testing procedure to the employee.

(2) The STT shall check the expiration date of the saliva testing device, show the date to the employee, and shall not use a device at any time subsequent to the expiration date.

(3) The STT shall open an individually sealed package containing the device in the presence of the employee.

(4) The STT shall offer the employee the opportunity to use the swab. If the employee chooses to use the swab, the STT shall instruct the employee to insert the absorbent end of the swab into

the employee's mouth, moving it actively throughout the mouth for a sufficient time to ensure that it is completely saturated, as provided in the manufacturer's instructions for the device.

(5) If the employee chooses not to use the swab, or in all cases in which a new test is necessary because the device did not activate (see paragraph (d)(8) of this section), the STT shall insert the absorbent end of the swab into the employee's mouth, moving it actively throughout the mouth for a sufficient time to ensure that it is completely saturated, as provided in the manufacturer's instructions for the device. The STT shall wear a surgical grade glove while doing so.

(6) The STT shall place the device on a flat surface or otherwise in a position in which the swab can be firmly placed into the opening provided in the device for this purpose. The STT shall insert the swab into this opening and maintain firm pressure on the device until the device indicates that it is activated.

(7) If the procedures of paragraph (d)(3)–(d)(5) of this section are not followed successfully (e.g., the swab breaks, the STT drops the swab on the floor or another surface, the swab is removed or falls from the device before the device is activated), the STT shall discard the device and swab and conduct a new test using a new device. The new device shall be one that has been under the control of the employer or STT prior to the test. The STT shall note in the remarks section of the form the reason for the new test. In this case, the STT shall offer the employee the choice of using the swab himself or herself or having the STT use the swab. If the procedures of paragraph (d)(3)–(d)(5) of this section are not followed successfully on the new test, the collection shall be terminated and an explanation provided in the remarks section of the form. A new test shall then be conducted, using an EBT for both the screening and confirmation tests.

(8) If the procedures of paragraph (d)(3)–(d)(5) of this section are followed successfully, but the device is not activated, the STT shall discard the device and swab and conduct a new test, in the same manner as provided in paragraph (d)(7) of this section. In this case, the STT shall place the swab into the employee's mouth to collect saliva for the new test.

(9) The STT shall read the result displayed on the device two minutes after inserting the swab into the device. The STT shall show the device and its reading to the employee and enter the result on the form.

(10) Devices, swabs, gloves and other materials used in saliva testing shall not be reused, and shall be disposed of in a sanitary manner following their use, consistent with applicable requirements.

(e) In the case of any screening test performed under this section, the STT, after determining the alcohol concentration result, shall follow the applicable provisions of §40.63 (e)(1)–(2), (f), (g), and (h). The STT shall also enter, in the ''Remarks'' section of the form, a notation that the screening test was performed using a non-evidential breath testing device or a saliva device, as applicable. Following completion of the screening test, the STT shall date the form and sign the certification in Step 3 of the form.

§40.103 Refusals to test and uncompleted tests.

(a) Refusal by an employee to complete and sign the alcohol testing form required by §40.99 (Step 2), to provide a breath or saliva sample, to provide an adequate amount of breath, or otherwise to cooperate in a way that prevents the completion of the testing process, shall be noted by the STT in the remarks section of the form. This constitutes a refusal to test. The testing process shall be terminated and the STT shall immediately notify the employer.

(b) If the screening test cannot be completed, for reasons other than a refusal by the employee, or if an event occurs that would invalidate the test, the STT shall, if practicable, immediately begin a new screening test, using a new testing form and, in the case of a test using a saliva screening device, a new device.

§ 40.105 Inability to provide an adequate amount of breath or saliva.

(a) If an employee is unable to provide sufficient breath to complete a test on a non-evidential breath testing device, the procedures of § 40.69 apply.

(b) If an employee is unable to provide sufficient saliva to complete a test on a saliva screening device (e.g., the employee does not provide sufficient saliva to activate the device), the STT, as provided in § 40.101 of this part, shall conduct a new test using a new device. If the employee refuses to complete the new test, the STT shall terminate testing and immediately inform the employer. This constitutes a refusal to test.

(c) If the new test is completed, but there is an insufficient amount of saliva to activate the device, STT shall immediately inform the employer, which shall immediately cause an alcohol test to be administered to the employee using an EBT.

§ 40.107 Invalid tests.

An alcohol test using a non-evidential screening device shall be invalid under the following circumstances:

(a) With respect to a test conducted on a saliva device—

(1) The result is read before two minutes or after 15 minutes from the time the swab is inserted into the device;

(2) The device does not activate;

(3) The device is used for a test after the expiration date printed on its package; or

(4) The STT fails to note in the remarks section of the form that the screening test was conducted using a saliva device;

(b) With respect to a test conducted on any non-evidential alcohol testing device, the STT has failed to note on the remarks section of the form that the employee has failed or refused to sign the form following the recording on the form of the test result.

§ 40.109 Availability and disclosure of alcohol testing information about individual employees.

The provisions of § 40.81 apply to records of non-evidential alcohol screening tests.

§ 40.111 Maintenance and disclosure of records concerning non-evidential testing devices and STTs.

Records concerning STTs and non-evidential testing devices shall be maintained and disclosed following the same requirements applicable to BATs and EBTs under § 40.81 of this part.

APPENDIX A TO PART 40—FEDERAL DRUG TESTING CUSTODY AND CONTROL FORM

FEDERAL DRUG TESTING CUSTODY AND CONTROL FORM

SPECIMEN ID NO. 0000000 A LABORATORY ACCESSION NO.

▶ STEP 1: TO BE COMPLETED BY COLLECTOR OR EMPLOYER REPRESENTATIVE

A. Employer Name, Address and I.D. No. B. MRO Name and Address

C. Donor SSN or Employee I.D. No. _____

D. Reason for Test: ☐ Pre-employment ☐ Random ☐ Reasonable Suspicion/Cause ☐ Post Accident ☐ Return to Duty ☐ Follow-up ☐ Other (specify) _____

E. Tests to be Performed: ☐ THC, Cocaine, PCP, Opiates and Amphetamines ☐ Only THC and Cocaine ☐ OTHER (specify) _____

▶ STEP 2: TO BE COMPLETED BY COLLECTOR - Specimen temperature must be read within 4 minutes of collection.

Specimen temperature within range: ☐ Yes, 90° - 100°F/32° - 38°C ☐ No, Record specimen temperature here _____

▶ STEP 3: TO BE COMPLETED BY COLLECTOR AND DONOR - Collector affixes bottle seal(s) to bottle(s). Collector dates seal(s). Donor initials seal(s).

▶ STEP 4: TO BE COMPLETED BY DONOR - Go to copy 4 (pink page); STEP 4

▶ STEP 5: TO BE COMPLETED BY COLLECTOR

COLLECTION SITE LOCATION:

Collection Facility ( ) Collector's Business Phone No.

SPLIT SPECIMEN COLLECTION ☐ YES ☐ NO

Address City State Zip

REMARKS _____

I certify that the specimen identified on this form is the specimen presented to me by the donor providing the certification on Copy 4 of this form, that it bears the same specimen identification number as that set forth above, and that it has been collected, labelled and sealed as in accordance with applicable Federal requirements

(PRINT) Collector's Name (First, MI, Last) X Signature of Collector Date (Mo./Day/Yr.) Time AM PM

▶ STEP 6: TO BE INITIATED BY THE COLLECTOR AND COMPLETED AS NECESSARY THEREAFTER

DATE MO. DAY YR	SPECIMEN RELEASED BY	SPECIMEN RECEIVED BY	PURPOSE OF CHANGE
/ /	DONOR - NO SIGNATURE	Signature Name	PROVIDE SPECIMEN FOR TESTING
/ /	Signature Name	Signature Name	
/ /	Signature Name	Signature Name	
/ /	Signature Name	Signature Name	

STEP 7: TO BE COMPLETED BY THE LABORATORY - Specimen Bottle Seal(s) Intact: ☐ YES ☐ NO, Explain in Remarks Below.

THE RESULTS FOR THE ABOVE IDENTIFIED SPECIMEN ARE IN ACCORDANCE WITH THE APPLICABLE INITIAL TEST AND CONFIRMATORY TEST CUTOFF LEVELS ESTABLISHED BY THE HHS *MANDATORY GUIDELINES FOR FEDERAL WORKPLACE DRUG TESTING PROGRAMS*

☐ NEGATIVE ☐ POSITIVE, for the following: ☐ CANNABINOIDS as Carboxy-THC ☐ COCAINE METABOLITES as Benzoylecgonine ☐ PHENCYCLIDINE

☐ TEST NOT PERFORMED ☐ OPIATES: ☐ codeine ☐ morphine ☐ AMPHETAMINES: ☐ amphetamine ☐ methamphetamine ☐ OTHER _____

REMARKS _____

TEST LAB (if different from above) _____ NAME ADDRESS ( ) PHONE NO.

I certify that the specimen identified by the laboratory accession number on this form is the same specimen that bears the specimen identification number set forth above, that the specimen has been examined upon receipt, handled and analyzed in accordance with applicable Federal requirements, and that the results set forth are for that specimen

(PRINT) Certifying Scientist's Name (First, MI, Last) Signature of Certifying Scientist Date (Mo. / Day / Yr.)

STEP 8: TO BE COMPLETED BY THE MEDICAL REVIEW OFFICER

I have reviewed the laboratory results for the specimen identified by this form in accordance with applicable Federal requirements. My determination/verification is:

☐ Negative ☐ Positive ☐ Test Not Performed ☐ Test Cancelled

REMARKS _____

(PRINT) Medical Review Officer's Name (First, MI, Last) Signature of Medical Review Officer Date (Mo. / Day / Yr.)

COPY 1 - ORIGINAL - MUST ACCOMPANY SPECIMEN TO LABORATORY

SPECIMEN BOTTLE SEALS

SPECIMEN ID NO. 0000000 A

SPECIMEN ID NO. 0000000 B (SPLIT)

PLACE OVER CAP

PLACE OVER CAP

Donor's Initials

Date (Mo. Day Yr.)

Donor's Initials

Date (Mo. Day Yr.)

SHIPPING CONTAINER SEAL

Date (Mo. Day Yr.)

Collector's Initials

Paperwork Reduction Act Notice (as required by 5 CFR 1320.21)

Public reporting burden for this collection of information, including the time for reviewing instructions, gathering and maintaining the data needed, and completing and reviewing the collection of information is estimated for each respondent to average: 5 minutes/donor; 4 minutes/collector; 3 minutes/laboratory; and 3 minutes/Medical Review Officer. Federal employees may send comments regarding these burden estimates, or any other aspect of this collection of information, including suggestions for reducing the burden, to Public Health Service Reports Clearance Officer, Attn: PRA, Hubert H. Humphrey Building, Rm 721-B, 200 Independence Ave. S.W., Washington, D.C. 20201. Individuals from the private sector may send comments/suggestions to: Department of Transportation, Drug Enforcement and Program Compliance, Rm 9404, 400 Seventh St. S.W., Washington, D.C. 20590. In addition, copies of all comments/suggestions may be sent to: Office of Management and Budget, Paperwork Reduction Project, Rm 3001, 725 Seventeenth St. N.W., Washington, D.C. 20503.

Back of Copy 1, 2, 3, 4, and 6.

FEDERAL DRUG TESTING CUSTODY AND CONTROL FORM

SPECIMEN ID NO. LABORATORY ACCESSION NO.

STEP 1: TO BE COMPLETED BY COLLECTOR OR EMPLOYER REPRESENTATIVE

A. Employer Name, Address and I.D. No. B. MRO Name and Address

C. Donor SSN or Employee I.D. No. _____

D. Reason for Test: ☐ Pre-employment ☐ Random ☐ Reasonable Suspicion/Cause ☐ Post Accident ☐ Return to Duty ☐ Follow-up ☐ Other (specify) _____

E. Tests to be Performed: ☐ THC, Cocaine, PCP, Opiates and Amphetamines ☐ Only THC and Cocaine ☐ OTHER (specify) _____

STEP 2: TO BE COMPLETED BY COLLECTOR - Specimen temperature must be read within 4 minutes of collection.

Specimen temperature within range: ☐ Yes, 90° - 100°F/32° - 38°C ☐ No, Record specimen temperature here _____

STEP 3: TO BE COMPLETED BY COLLECTOR AND DONOR - Collector affixes bottle seal(s) to bottle(s). Collector dates seal(s). Donor initials seal(s).

STEP 4: TO BE COMPLETED BY DONOR - Go to copy 4 (pink page); STEP 4

STEP 5: TO BE COMPLETED BY COLLECTOR

COLLECTION SITE LOCATION:

Collection Facility _____ ( ) Collector's Business Phone No. _____

SPLIT SPECIMEN COLLECTION ☐ YES ☐ NO

Address _____ City _____ State _____ Zip _____

REMARKS: _____

I certify that the specimen identified on this form is the specimen presented to me by the donor providing the certification on Copy 4 of this form, that it bears the same specimen identification number as that set forth above, and that it has been collected, labelled and sealed as in accordance with applicable Federal requirements.

(PRINT) Collector's Name (First, MI, Last) _____ Signature of Collector _____ Date (Mo./Day/Yr.) / / _____ Time AM PM

STEP 6: TO BE INITIATED BY THE COLLECTOR AND COMPLETED AS NECESSARY THEREAFTER

DATE MO. DAY YR.	SPECIMEN RELEASED BY	SPECIMEN RECEIVED BY	PURPOSE OF CHANGE
/ /	DONOR - NO SIGNATURE	Signature Name	PROVIDE SPECIMEN FOR TESTING
/ /	Signature Name	Signature Name	
/ /	Signature Name	Signature Name	
/ /	Signature Name	Signature Name	

STEP 7: TO BE COMPLETED BY THE LABORATORY - Specimen Bottle Seal(s) intact: ☐ YES ☐ NO, Explain in Remarks Below.

THE RESULTS FOR THE ABOVE IDENTIFIED SPECIMEN ARE IN ACCORDANCE WITH THE APPLICABLE INITIAL TEST AND CONFIRMATORY TEST CUTOFF LEVELS ESTABLISHED BY THE HHS *MANDATORY GUIDELINES FOR FEDERAL WORKPLACE DRUG TESTING PROGRAMS*

☐ NEGATIVE ☐ POSITIVE, for the following: ☐ CANNABINOIDS as Carboxy—THC ☐ COCAINE METABOLITES as Benzoylecgonine ☐ PHENCYCLIDINE

☐ TEST NOT PERFORMED ☐ OPIATES: ☐ codeine ☐ morphine ☐ AMPHETAMINES: ☐ amphetamine ☐ methamphetamine ☐ OTHER _____

REMARKS _____

TEST LAB (if different from above) _____ NAME _____ ADDRESS _____ ( ) PHONE NO.

I certify that the specimen identified by the laboratory accession number on this form is the same specimen that bears the specimen identification number set forth above, that the specimen has been examined upon receipt, handled and analyzed in accordance with applicable Federal requirements, and that the results set forth are for that specimen.

(PRINT) Certifying Scientist's Name (First, MI, Last) _____ Signature of Certifying Scientist _____ Date (Mo. / Day / Yr.) / / _____

STEP 8: TO BE COMPLETED BY THE MEDICAL REVIEW OFFICER

I have reviewed the laboratory results for the specimen identified by this form in accordance with applicable Federal requirements. My determination/verification is:

☐ Negative ☐ Positive ☐ Test Not Performed ☐ Test Cancelled

REMARKS _____

(PRINT) Medical Review Officer's Name (First, MI, Last) _____ Signature of Medical Review Officer _____ Date (Mo. / Day / Yr.) / / _____

COPY 2 - 2nd ORIGINAL - MUST ACCOMPANY SPECIMEN TO LABORATORY

FEDERAL DRUG TESTING CUSTODY AND CONTROL FORM

SPECIMEN ID NO. **-B** LABORATORY ACCESSION NO.

STEP 1: TO BE COMPLETED BY COLLECTOR OR EMPLOYER REPRESENTATIVE

A. Employer Name, Address and I.D. No.

B. MRO Name and Address

C. Donor SSN or Employee I.D. No. _____

D. Reason for Test: ☐ Pre-employment ☐ Random ☐ Reasonable Suspicion/Cause ☐ Post Accident ☐ Return to Duty ☐ Follow-up ☐ Other (specify) _____

E. Tests to be Performed: ☐ THC, Cocaine, PCP, Opiates and Amphetamines ☐ Only THC and Cocaine ☐ OTHER (specify) _____

STEP 2: TO BE COMPLETED BY COLLECTOR - Specimen temperature must be read within 4 minutes of collection.

Specimen temperature within range: ☐ Yes, 90° - 100°F/32° - 38°C ☐ No, Record specimen temperature here _____

STEP 3: TO BE COMPLETED BY COLLECTOR AND DONOR - Collector affixes bottle seal(s) to bottle(s). Collector dates seal(s). Donor initials seal(s).

STEP 4: TO BE COMPLETED BY DONOR - Go to copy 4 (pink page); STEP 4

STEP 5: TO BE COMPLETED BY COLLECTOR

COLLECTION SITE LOCATION:

SPLIT SPECIMEN COLLECTION ☐ YES ☐ NO

Collection Facility ( ) Collector's Business Phone No.

Address City State Zip

REMARKS: _____

I certify that the specimen identified on this form is the specimen presented to me by the donor providing the certification on Copy 4 of this form, that it bears the same specimen identification number as that set forth above, and that it has been collected, labelled and sealed as in accordance with applicable Federal requirements.

(PRINT) Collector's Name (First, MI, Last) Signature of Collector Date (Mo./Day/Yr.) / / Time AM PM

STEP 6: TO BE INITIATED BY THE COLLECTOR AND COMPLETED AS NECESSARY THEREAFTER

DATE MO. DAY YR.	SPECIMEN RELEASED BY	SPECIMEN RECEIVED BY	PURPOSE OF CHANGE
/ /	DONOR - NO SIGNATURE	Signature Name	PROVIDE SPECIMEN FOR TESTING
/ /	Signature Name	Signature Name	
/ /	Signature Name	Signature Name	
/ /	Signature Name	Signature Name	

STEP 7: TO BE COMPLETED BY THE LABORATORY - Specimen Bottle Seal(s) Intact: ☐ YES ☐ NO, Explain in Remarks Below.

THE RESULTS FOR THE ABOVE IDENTIFIED SPECIMEN ARE IN ACCORDANCE WITH THE APPLICABLE PROCEDURES ESTABLISHED BY THE HHS MANDATORY *GUIDELINES FOR FEDERAL WORKPLACE DRUG TESTING PROGRAMS*

☐ RECONFIRMED for the following: ☐ CANNABINOIDS as Carboxy—THC ☐ COCAINE METABOLITES as Benzoylecgonine ☐ PHENCYCLIDINE
☐ FAILED TO RECONFIRM ☐ OPIATES: ☐ codeine ☐ morphine ☐ AMPHETAMINES: ☐ amphetamine ☐ methamphetamine ☐ OTHER _____
☐ TEST NOT PERFORMED

REMARKS _____

TEST LAB (if different from above) _____ NAME ADDRESS ( ) PHONE NO.

I certify that the specimen identified by the laboratory accession number on this form is the same specimen that bears the specimen identification number set forth above, that the specimen has been examined upon receipt, handled and analyzed in accordance with applicable Federal requirements, and that the results set forth are for that specimen.

(PRINT) Certifying Scientist's Name (First, MI, Last) Signature of Certifying Scientist Date (Mo. / Day / Yr.) / /

STEP 8: TO BE COMPLETED BY THE MEDICAL REVIEW OFFICER

I have reviewed the laboratory results for the specimen identified by this form in accordance with applicable Federal requirements. My determination/verification is:

☐ Reconfirmed ☐ Failed to reconfirm- Both tests cancelled ☐ Test not performed Both tests cancelled REMARKS _____

(PRINT) Medical Review Officer's Name (First, MI, Last) Signature of Medical Review Officer Date (Mo. / Day / Yr.) / /

COPY 3 - SPLIT SPECIMEN MUST ACCOMPANY SPLIT SPECIMEN TO LABORATORY

FEDERAL DRUG TESTING CUSTODY AND CONTROL FORM

SPECIMEN ID NO. LABORATORY ACCESSION NO.

STEP 1: TO BE COMPLETED BY COLLECTOR OR EMPLOYER REPRESENTATIVE

A. Employer Name, Address and I.D. No. B. MRO Name and Address

C. Donor SSN or Employee I.D. No. _____

D. Reason for Test: ☐ Pre-employment ☐ Random ☐ Reasonable Suspicion/Cause ☐ Post Accident ☐ Return to Duty ☐ Follow-up ☐ Other (specify) _____

E. Tests to be Performed: ☐ THC, Cocaine, PCP, Opiates and Amphetamines ☐ Only THC and Cocaine ☐ OTHER (specify) _____

STEP 2: TO BE COMPLETED BY COLLECTOR - Specimen temperature must be read within 4 minutes of collection.

Specimen temperature within range: ☐ Yes, 90° - 100°F/32° - 38°C ☐ No, Record specimen temperature here _____

STEP 3: TO BE COMPLETED BY COLLECTOR AND DONOR - Collector affixes bottle seal(s) to bottle(s). Collector dates seal(s). Donor initials seal(s).

▶ **STEP 4: SEE BELOW**

STEP 5: TO BE COMPLETED BY COLLECTOR - RETURN TO COPY 1

COLLECTION SITE LOCATION:

Collection Facility ( ) Collector's Business Phone No.

SPLIT SPECIMEN COLLECTION ☐ YES ☐ NO

Address City State Zip

REMARKS: _____

I certify that the specimen identified on this form is the specimen presented to me by the donor providing the certification on Copy 4 of this form, that it bears the same specimen identification number as that set forth above, and that it has been collected, labelled and sealed as in accordance with applicable Federal requirements.

(PRINT) Collector's Name (First, MI, Last) Signature of Collector Date (Mo./Day/Yr.) Time AM PM

STEP 6: TO BE INITIATED BY THE COLLECTOR AND COMPLETED AS NECESSARY THEREAFTER

DATE MO DAY YR.	SPECIMEN RELEASED BY	SPECIMEN RECEIVED BY	PURPOSE OF CHANGE
/ /	DONOR - NO SIGNATURE	Signature Name	PROVIDE SPECIMEN FOR TESTING
/ /	Signature Name	Signature Name	
/ /	Signature Name	Signature Name	
/ /	Signature Name	Signature Name	

▶ **STEP 4: TO BE COMPLETED BY DONOR**

Daytime Phone No. ( ) Evening Phone No ( ) Date of Birth / / Mo. Day Yr.

I certify that I provided my urine specimen to the collector; that I have not adulterated it in any manner; that each specimen bottle used was sealed with a tamper-evident seal in my presence and that the information provided on this form and on the label affixed to each specimen bottle is correct.

(PRINT) Donor's Name (First, MI, Last) X Signature of Donor Date (Mo. / Day / Yr.)

Should the results of the laboratory tests for the specimen identified by this form be confirmed positive, the Medical Review Officer will contact you to ask about prescriptions and over-the-counter medications you may have taken. Therefore, you may want to make a list of those medications as a "memory jogger." THIS LIST IS NOT NECESSARY. If you choose to make a list, do so either on a separate piece of paper or on the back of your copy (Copy 5).—DO NOT LIST ON THE BACK OF ANY OTHER COPY OF THE FORM. TAKE COPY 5 WITH YOU.

STEP 8: TO BE COMPLETED BY THE MEDICAL REVIEW OFFICER

I have reviewed the laboratory results for the specimen identified by this form in accordance with applicable Federal requirements. My determination/verification is:

☐ Negative ☐ Positive ☐ Test Not Performed ☐ Test Cancelled

REMARKS _____

(PRINT) Medical Review Officer's Name (First, MI, Last) Signature of Medical Review Officer Date (Mo. / Day / Yr.)

COPY 4 - SEND DIRECTLY TO MEDICAL REVIEW OFFICER - DO NOT SEND TO LABORATORY

FEDERAL DRUG TESTING CUSTODY AND CONTROL FORM

SPECIMEN ID NO. LABORATORY ACCESSION NO.

STEP 1: TO BE COMPLETED BY COLLECTOR OR EMPLOYER REPRESENTATIVE

A. Employer Name, Address and I.D. No. B. MRO Name and Address

C. Donor SSN or Employee I.D. No. _____

D. Reason for Test: ☐ Pre-employment ☐ Random ☐ Reasonable Suspicion/Cause ☐ Post Accident ☐ Return to Duty ☐ Follow-up ☐ Other (specify) _____

E. Tests to be Performed: ☐ THC, Cocaine, PCP, Opiates and Amphetamines ☐ Only THC and Cocaine ☐ OTHER (specify) _____

STEP 2: TO BE COMPLETED BY COLLECTOR - Specimen temperature must be read within 4 minutes of collection.

Specimen temperature within range: ☐ Yes, 90° - 100°F/32° - 38°C ☐ No, Record specimen temperature here _____

STEP 3: TO BE COMPLETED BY COLLECTOR AND DONOR - Collector affixes bottle seal(s) to bottle(s). Collector dates seal(s). Donor initials seal(s).

STEP 4: SEE BELOW

STEP 5: TO BE COMPLETED BY COLLECTOR - RETURN TO COPY 1

COLLECTION SITE LOCATION:

Collection Facility ( ) Collector's Business Phone No.

SPLIT SPECIMEN COLLECTION ☐ YES ☐ NO

Address City State Zip

REMARKS: _____

I certify that the specimen identified on this form is the specimen presented to me by the donor providing the certification on Copy 4 of this form, that it bears the same specimen identification number as that set forth above, and that it has been collected, labelled and sealed as in accordance with applicable Federal requirements.

(PRINT) Collector's Name (First, MI, Last) Signature of Collector Date (Mo./Day/Yr.) / / Time AM PM

STEP 6: TO BE INITIATED BY THE COLLECTOR AND COMPLETED AS NECESSARY THEREAFTER

DATE MO. DAY YR.	SPECIMEN RELEASED BY	SPECIMEN RECEIVED BY	PURPOSE OF CHANGE
/ /	DONOR - NO SIGNATURE	Signature Name	PROVIDE SPECIMEN FOR TESTING
/ /	Signature Name	Signature Name	
/ /	Signature Name	Signature Name	
/ /	Signature Name	Signature Name	

STEP 4: TO BE COMPLETED BY DONOR

Daytime Phone No. ( ) Evening Phone No. ( ) Date of Birth / / Mo. Day Yr.

I certify that I provided my urine specimen to the collector; that I have not adulterated it in any manner; that each specimen bottle used was sealed with a tamper-evident seal in my presence and that the information provided on this form and on the label affixed to each specimen bottle is correct.

(PRINT) Donor's Name (First, MI, Last) X Signature of Donor Date (Mo. / Day / Yr.) / /

Should the results of the laboratory tests for the specimen identified by this form be confirmed positive, the Medical Review Officer will contact you to ask about prescriptions and over-the-counter medications you may have taken. Therefore, you may want to make a list of those medications as a "memory jogger." THIS LIST IS NOT NECESSARY. If you choose to make a list, do so either on a separate piece of paper or on the back of your copy (Copy 5).—DO NOT LIST ON THE BACK OF ANY OTHER COPY OF THE FORM. TAKE COPY 5 WITH YOU.

STEP 8: TO BE COMPLETED BY THE MEDICAL REVIEW OFFICER

I have reviewed the laboratory results for the specimen identified by this form in accordance with applicable Federal requirements. My determination/verification is:

☐ Negative ☐ Positive ☐ Test Not Performed ☐ Test Cancelled

REMARKS _____

(PRINT) Medical Review Officer's Name (First, MI, Last) Signature of Medical Review Officer Date (Mo. / Day / Yr.) / /

COPY 5 - GIVE TO DONOR DO NOT SEND TO LABORATORY

Privacy Act Statement: (For Federal Employees Only)

Submission of the information on the attached form is voluntary. However, incomplete submission of the information, refusal to provide a urine specimen, or substitution or adulteration of a specimen may result in delay or denial of your application for employment/appointment or may result in removal from the Federal service or other disciplinary action.

The authority for obtaining the urine specimen and identifying information contained herein is Executive Order 12564 ("Drug-Free Federal Workplace"), 5 U.S.C. § 3301 (2), 5 U.S.C. § 7301 and Section 503 of Public Law 100-71, 5 U.S.C. § 7301 note. Under provisions of Executive Order 12564 and 5 U.S.C. 7301, test results may only be disclosed to agency officials on a need-to-know basis. This may include the agency Medical Review Officer, the administrator of the Employee Assistance Program, and a supervisor with authority to take adverse personnel action. This information may also be disclosed to a court where necessary to defend against a challenge to an adverse personnel action.

Submission of your SSN is not required by law and is voluntary. Your refusal to furnish your number will not result in the denial of any right, benefit, or privilege provided by law. Your SSN is solicited, pursuant to Executive Order 9397, for purposes of associating information in agency files relating to you and for purposes of identifying the specimen provided for urinalysis testing for illegal drugs. If you refuse to indicate your SSN, a substitute number or other identifier will be assigned, as required, to process the specimen.

In the event laboratory analysis determines the presence of one or more illegal drugs in the specimen you provide, you will be contacted by an agency Medical Review Officer (MRO). The MRO will determine whether there is a legitimate medical explanation for the drug(s) identified by urinalysis.

Paperwork Reduction Act Notice (as required by 5 CFR 1320.21)

Public reporting burden for this collection of information, including the time for reviewing instructions, gathering and maintaining the data needed, and completing and reviewing the collection of information is estimated for each respondent to average: 5 minutes/donor; 4 minutes/collector; 3 minutes/laboratory; and 3 minutes/Medical Review Officer. Federal employees may send comments regarding these burden estimates, or any other aspect of this collection of information, including suggestions for reducing the burden, to Public Health Service Reports Clearance Officer, Attn: PRA, Hubert H. Humphrey Building, Rm 721-B, 200 Independence Ave. S.W., Washington, D.C. 20201. Individuals from the private sector may send comments/suggestions to: Department of Transportation, Drug Enforcement and Program Compliance, Rm 9404, 400 Seventh St. S.W., Washington, D.C. 20590. In addition, copies of all comments/suggestions may be sent to: Office of Management and Budget, Paperwork Reduction Project, Rm 3001, 725 Seventeenth St. N.W., Washington, D.C. 20503.

Back of Copy 5.

FEDERAL DRUG TESTING CUSTODY AND CONTROL FORM

SPECIMEN ID NO. LABORATORY ACCESSION NO.

STEP 1: TO BE COMPLETED BY COLLECTOR OR EMPLOYER REPRESENTATIVE

A. Employer Name, Address and I.D. No. B. MRO Name and Address

C. Donor SSN or Employee I.D. No. _____

D. Reason for Test: ☐ Pre-employment ☐ Random ☐ Reasonable Suspicion/Cause ☐ Post Accident ☐ Return to Duty ☐ Follow-up ☐ Other (specify) _____

E. Tests to be Performed: ☐ THC, Cocaine, PCP, Opiates and Amphetamines ☐ Only THC and Cocaine ☐ OTHER (specify) _____

STEP 2: TO BE COMPLETED BY COLLECTOR - Specimen temperature must be read within 4 minutes of collection.

Specimen temperature within range: ☐ Yes, 90° - 100°F/32° - 38°C ☐ No, Record specimen temperature here _____

STEP 3: TO BE COMPLETED BY COLLECTOR AND DONOR - Collector affixes bottle seal(s) to bottle(s). Collector dates seal(s). Donor initials seal(s).

STEP 4: SEE BELOW

STEP 5: TO BE COMPLETED BY COLLECTOR - RETURN TO COPY 1

COLLECTION SITE LOCATION:

Collection Facility ( ) Collector's Business Phone No.

SPLIT SPECIMEN COLLECTION ☐ YES ☐ NO

Address City State Zip

REMARKS: _____

I certify that the specimen identified on this form is the specimen presented to me by the donor providing the certification on Copy 4 of this form, that it bears the same specimen identification number as that set forth above, and that it has been collected, labelled and sealed as in accordance with applicable Federal requirements.

(PRINT) Collector's Name (First, MI, Last) Signature of Collector Date (Mo./Day/Yr.) Time AM PM

STEP 6: TO BE INITIATED BY THE COLLECTOR AND COMPLETED AS NECESSARY THEREAFTER

DATE MO. DAY YR.	SPECIMEN RELEASED BY	SPECIMEN RECEIVED BY	PURPOSE OF CHANGE
/ /	DONOR - NO SIGNATURE	Signature Name	PROVIDE SPECIMEN FOR TESTING
/ /	Signature Name	Signature Name	
/ /	Signature Name	Signature Name	
/ /	Signature Name	Signature Name	

STEP 4: TO BE COMPLETED BY DONOR

Daytime Phone No. Evening Phone No. Date of Birth / / Mo. Day Yr.

I certify that I provided my urine specimen to the collector; that I have not adulterated it in any manner; that each specimen bottle used was sealed with a tamper-evident seal in my presence and that the information provided on this form and on the label affixed to each specimen bottle is correct.

(PRINT) Donor's Name (First, MI, Last) Signature of Donor Date (Mo. / Day / Yr.)

Should the results of the laboratory tests for the specimen identified by this form be confirmed positive, the Medical Review Officer will contact you to ask about prescriptions and over-the-counter medications you may have taken. Therefore, you may want to make a list of those medications as a "memory jogger." THIS LIST IS NOT NECESSARY. If you choose to make a list, do so either on a separate piece of paper or on the back of your copy (Copy 5).—DO NOT LIST ON THE BACK OF ANY OTHER COPY OF THE FORM. TAKE COPY 5 WITH YOU.

STEP 8: TO BE COMPLETED BY THE MEDICAL REVIEW OFFICER

I have reviewed the laboratory results for the specimen identified by this form in accordance with applicable Federal requirements. My determination/verification is:

☐ Negative ☐ Positive ☐ Test Not Performed ☐ Test Cancelled

REMARKS _____

(PRINT) Medical Review Officer's Name (First, MI, Last) Signature of Medical Review Officer Date (Mo. / Day / Yr.)

COPY 6 COLLECTOR RETAINS DO NOT SEND TO LABORATORY

FEDERAL DRUG TESTING CUSTODY AND CONTROL FORM

SPECIMEN ID NO. LABORATORY ACCESSION NO.

STEP 1: TO BE COMPLETED BY COLLECTOR OR EMPLOYER REPRESENTATIVE

A. Employer Name, Address and I.D. No. B. MRO Name and Address

C. Donor SSN or Employee I.D. No. _____

D. Reason for Test: ☐ Pre-employment ☐ Random ☐ Reasonable Suspicion/Cause ☐ Post Accident ☐ Return to Duty ☐ Follow-up ☐ Other (specify) _____

E. Tests to be Performed: ☐ THC, Cocaine, PCP, Opiates and Amphetamines ☐ Only THC and Cocaine ☐ OTHER (specify) _____

STEP 2: TO BE COMPLETED BY COLLECTOR - Specimen temperature must be read within 4 minutes of collection.

Specimen temperature within range: ☐ Yes, 90° - 100°F/32° - 38°C ☐ No, Record specimen temperature here _____

STEP 3: TO BE COMPLETED BY COLLECTOR AND DONOR - Collector affixes bottle seal(s) to bottle(s). Collector dates seal(s). Donor initials seal(s).

STEP 4: SEE BELOW

STEP 5: TO BE COMPLETED BY COLLECTOR - RETURN TO COPY 1

COLLECTION SITE LOCATION:

Collection Facility ( ) Collector's Business Phone No.

SPLIT SPECIMEN COLLECTION ☐ YES ☐ NO

Address City State Zip

REMARKS: _____

I certify that the specimen identified on this form is the specimen presented to me by the donor providing the certification on Copy 4 of this form, that it bears the same specimen identification number as that set forth above, and that it has been collected, labelled and sealed as in accordance with applicable Federal requirements.

(PRINT) Collector's Name (First, MI, Last) Signature of Collector Date (Mo./Day/Yr.) Time AM PM

STEP 6: TO BE INITIATED BY THE COLLECTOR AND COMPLETED AS NECESSARY THEREAFTER

DATE MO. DAY YR.	SPECIMEN RELEASED BY	SPECIMEN RECEIVED BY	PURPOSE OF CHANGE
/ /	DONOR - NO SIGNATURE	Signature Name	PROVIDE SPECIMEN FOR TESTING
/ /	Signature Name	Signature Name	
/ /	Signature Name	Signature Name	
/ /	Signature Name	Signature Name	

STEP 4: TO BE COMPLETED BY DONOR

Daytime Phone No. Evening Phone No. Date of Birth / / Mo. Day Yr.

I certify that I provided my urine specimen to the collector; that I have not adulterated it in any manner; that each specimen bottle used was sealed with a tamper-evident seal in my presence and that the information provided on this form and on the label affixed to each specimen bottle is correct.

(PRINT) Donor's Name (First, MI, Last) Signature of Donor Date (Mo. / Day / Yr.)

Should the results of the laboratory tests for the specimen identified by this form be confirmed positive, the Medical Review Officer will contact you to ask about prescriptions and over-the-counter medications you may have taken. Therefore, you may want to make a list of those medications as a "memory jogger." THIS LIST IS NOT NECESSARY. If you choose to make a list, do so either on a separate piece of paper or on the back of your copy (Copy 5).—DO NOT LIST ON THE BACK OF ANY OTHER COPY OF THE FORM. TAKE COPY 5 WITH YOU.

STEP 8: TO BE COMPLETED BY THE MEDICAL REVIEW OFFICER

I have reviewed the laboratory results for the specimen identified by this form in accordance with applicable Federal requirements. My determination/verification is:

☐ Negative ☐ Positive ☐ Test Not Performed ☐ Test Cancelled

REMARKS _____

(PRINT) Medical Review Officer's Name (First, MI, Last) Signature of Medical Review Officer Date (Mo. / Day / Yr.)

COPY 7 FORWARD TO EMPLOYER - DO NOT SEND TO LABORATORY

INSTRUCTION FOR COMPLETING DRUG TESTING CUSTODY AND CONTROL FORM

The following instructions are in accordance with procedures established by the Department of Health and Human Services and the Department of Transportation mandatory guidelines for federal and transportation workplace drug testing programs.

NOTE: Use ballpoint pen, press hard, and check all copies for legibility

STEP 1

If the information in STEP 1 has not been completed, collector (not donor) completes STEP 1 (A-E).

NOTE: Donor refusal to provide SSN or Employee I.D. number must be annotated in STEP 5, collector's REMARKS section.

STEP 2.

Upon receiving specimen from donor, check specimen temperature. This must be accomplished within 4 minutes.

Check block marked "Yes" if temperature is within range.

If specimen temperature is not within range, check block marked "No" and record specimen temperature.

STEP 3. FOR SPLIT SPECIMEN COLLECTIONS ONLY

Secure caps on both specimen bottles and affix specimen bottle seal labeled A over the cap and down the sides of the primary specimen (bottle containing at least 30ml of urine).

Affix specimen bottle seal labeled B (split) on the split specimen (bottle containing at least 15ml of urine) in the same manner.

Record date on both specimen bottle seals.

FOR SINGLE SPECIMEN COLLECTION ONLY

Secure cap on specimen bottle (containing at least 30ml of urine) and affix specimen bottle seal labeled A over the cap and down the sides of the specimen bottle.

Record date on specimen bottle seal.

Instruct donor to initial the specimen bottle seal.

STEP 4.

Turn to Copy 4 (pink page), STEP 4.

Instruct donor to complete STEP 4.

Ensure donor provides his/her daytime and evening phone number and date of birth.

Instruct donor to read certification statement. Ensure donor prints his/her name and signs and dates the certification statement.

NOTE: Donor refusal to sign must be annotated in STEP 5, collector's remarks section.

Upon completion, check donor entries, return to Copy 1.

STEP 5.

After returning to Copy 1, go to STEP 5.

Complete the name and address of the facility at which the collection is taking place.

List a business telephone number where collector can be reached.

Place a check in the box indicating whether or not a split specimen was collected.

Record any unusual occurrences concerning the collection (e.g. donor refusal to provide information/sign certification statement, specimen collected under direct observation, suspected adulteration) in the remarks section.

Collector completes collection certification section by printing and signing his/her name, recording the date and time of collection. Be sure to circle A.M. or P.M.

STEP 6. CHAIN OF CUSTODY SECTION

NOTE: Each time the specimen is handled, transferred, or placed into storage prior to being packaged for shipment, every individual must be identified (including a direct observer, if required) and the date and purpose of change recorded. The following instructions pertain to a collection in which the donor provides a specimen directly to the collector who seals, packages, and ships the specimen to the laboratory.

Record date of collection.

In the "Specimen Received By" column, sign and print your name indicating that you have received the specimen from the donor.

The "Purpose of Change" entry in the next column is pre-printed (Provide Specimen for Testing) and explains the transfer of the specimen from the donor to the collector.

On the next line, record the date the specimen was released by you.

Complete the "Specimen Released By" block by signing and printing your name.

If you are preparing the specimen for shipment to the laboratory complete the "Specimen Received By" block by printing the carrier or shipment provider name only. (See Example)

Complete the "Purpose of Change" block explaining the transfer of the specimen from the collector to the carrier or shipment provider (e.g. Ship Specimen to Lab).

DATE MO. DAY YR.	SPECIMEN RELEASED BY	SPECIMEN RECEIVED BY	PURPOSE OF CHANGE
8 / 15 / 94	DONOR - NO SIGNATURE	Signature Connie Collector Name Connie Collector	PROVIDE SPECIMEN FOR TESTING
8 / 15 / 94	Signature Connie Collector Name Connie Collector	Signature Name ABC Courier Service	SHIP SPECIMEN TO LAB
/ /	Signature Name	Signature Name	
/ /	Signature Name	Signature Name	

COMPLETING THE COLLECTION PROCESS

Upon completing Step 6, give donor his/her copy, Copy 5, (green page) of the Drug Testing Custody and Control Form.

Donor may leave the collection site at this point.

If a split specimen collection was performed, place both specimen bottles and Copies 1, 2, and 3 of the Drug Testing Custody and Control Form in the shipping container.

If a single collection was performed, place the specimen bottle and Copies 1 and 2 of the Drug Testing Custody and Control Form in the shipping container. Discard Copy 3.

Secure the shipping container. On the shipping container seal, record your initials and the date.

Send Copy 4 (pink page) directly to the Medical Review Officer. Do not send to laboratory.

Retain Copy 6 (yellow page) for your records.

Forward Copy 7 (blue page) to the employer. Do not send to laboratory.

[59 FR 43002, Aug. 19, 1994, as amended at 60 FR 19537, Apr. 19, 1995]

APPENDIX B TO PART 40—THE BREATH ALCOHOL TESTING FORM

U.S. Department of Transportation (DOT) Breath Alcohol Testing Form

[THE INSTRUCTIONS FOR COMPLETING THIS FORM ARE ON THE BACK OF COPY 3]

▸ STEP 1: TO BE COMPLETED BY BREATH ALCOHOL TECHNICIAN

A. Employee Name _____
(PRINT) (First, M.I., Last)

B. SSN or Employee ID No. _____

C. Employer Name, Address, & Telephone No. _____

_____

_____ ( ) _____
Telephone Number

D. Reason for Test: ☐ Pre-employment ☐ Random ☐ Reasonable Suspicion/Cause ☐ Post-accident ☐ Return to Duty ☐ Follow-up

▸ STEP 2: TO BE COMPLETED BY EMPLOYEE

I certify that I am about to submit to breath alcohol testing required by U.S. Department of Transportation regulations and that the identifying information provided on this form is true and correct.

_____ Signature of Employee — Date ___/___/___ Month Day Year

▸ STEP 3: TO BE COMPLETED BY BREATH ALCOHOL TECHNICIAN

I certify that I have conducted breath alcohol testing on the above named individual in accordance with the procedures established in the U.S. Department of Transportation regulation, 49 CFR Part 40, that I am qualified to operate the testing devices identified, and that the results are as recorded.

Screening test: Complete **only if** the testing device is not designed to **print** the following.

Test No.	Testing Device Name	Testing Device Serial Number	Time	AM PM	Result

Confirmation test: Confirmation test results MUST be affixed to the back of each copy of this form.

Remarks: _____

_____

_____

(PRINT) Breath Alcohol Technician's Name (First, M.I., Last) — Signature of Breath Alcohol Technician — Date ___/___/___ Month Day Year

▸ STEP 4: TO BE COMPLETED BY EMPLOYEE

*I certify that I have submitted to the breath alcohol test the results of which are accurately recorded on this form. I understand that I must not drive, perform safety-sensitive duties, or operate heavy equipment if the results are **0.02 or greater**.*

_____ Signature of Employee — Date ___/___/___ Month Day Year

COPY 1 - ORIGINAL - FORWARD TO THE EMPLOYER

OMB No. 2105-0529
Exp. Date: 2/28/97

AFFIX SCREENING TEST RESULTS HERE (IF APPLICABLE) USE TAMPER-EVIDENT TAPE	AFFIX CONFIRMATION TEST RESULTS HERE USE TAMPER-EVIDENT TAPE

PAPERWORK REDUCTION ACT NOTICE (as required by 5 CFR 1320.21)

Public reporting burden for this collection of information is estimated for each respondent to average: 1 minute/employee, 4 minutes/Breath Alcohol Technician. Individuals may send comments regarding these burden estimates, or any other aspect of this collection of information, including suggestions for reducing the burden, to U.S. Department of Transportation, Drug Enforcement and Program Compliance, Room 9404, 400 Seventh St., SW, Washington, D.C. 20590 or Office of Management and Budget, Paperwork Reduction Project, Room 3001, 725 Seventeenth St., NW, Washington, D.C. 20503.

COPY 1 - ORIGINAL - FORWARD TO THE EMPLOYER

OMB No. 2105-0529
Exp. Date: 2/28/97

U.S. Department of Transportation (DOT) Breath Alcohol Testing Form

[THE INSTRUCTIONS FOR COMPLETING THIS FORM ARE ON THE BACK OF COPY 3]

▸ STEP 1: TO BE COMPLETED BY BREATH ALCOHOL TECHNICIAN

A. Employee Name _____
(PRINT) (First, M.I., Last)

B. SSN or Employee ID No. _____

C. Employer Name, Address, & Telephone No. _____

_____

_____ ( ) _____
Telephone Number

D. Reason for Test: ☐ Pre-employment ☐ Random ☐ Reasonable Suspicion/Cause ☐ Post-accident ☐ Return to Duty ☐ Follow-up

▸ STEP 2: TO BE COMPLETED BY EMPLOYEE

I certify that I am about to submit to breath alcohol testing required by U.S. Department of Transportation regulations and that the identifying information provided on this form is true and correct.

_____ Signature of Employee — Date ___/___/___ Month Day Year

▸ STEP 3: TO BE COMPLETED BY BREATH ALCOHOL TECHNICIAN

I certify that I have conducted breath alcohol testing on the above named individual in accordance with the procedures established in the U.S. Department of Transportation regulation, 49 CFR Part 40, that I am qualified to operate the testing devices identified, and that the results are as recorded.

Screening test: Complete **only** if the testing device is not designed to **print** the following.

Test No.	Testing Device Name	Testing Device Serial Number	Time AM PM	Result

Confirmation test: Confirmation test results **MUST** be affixed to the back of each copy of this form.

Remarks: _____

_____

_____

(PRINT) Breath Alcohol Technician's Name (First, M.I., Last) _____ Signature of Breath Alcohol Technician _____ Date ___/___/___ Month Day Year

▸ STEP 4: TO BE COMPLETED BY EMPLOYEE

*I certify that I have submitted to the breath alcohol test the results of which are accurately recorded on this form. I understand that I must not drive, perform safety-sensitive duties, or operate heavy equipment if the results are **0.02 or greater.***

_____ Signature of Employee — Date ___/___/___ Month Day Year

COPY 2 - EMPLOYEE RETAINS

OMB No. 2105-0529
Exp. Date: 2/28/97

AFFIX SCREENING TEST RESULTS HERE (IF APPLICABLE) USE TAMPER-EVIDENT TAPE	AFFIX CONFIRMATION TEST RESULTS HERE USE TAMPER-EVIDENT TAPE

Privacy Act Statement

(applicable in those cases where completed Breath Alcohol Testing Forms are retained in a Federal Privacy Act system of records)

Except for your Social Security Number (SSN), submission of the information on the front side of this form is mandatory. Incomplete submission of the information, failure to provide an adequate breath specimen for testing without a valid medical explanation, engaging in conduct that clearly obstructs the testing process, or failure to sign the certification statements on the front side of this form may result in delay or denial of your application for employment/appointment, your inability to resume performing safety-sensitive duties, removal from a safety-sensitive position, or other disciplinary action.

The authority for obtaining the breath specimen required by the U.S. Department of Transportation is the Omnibus Transportation Employee Testing Act of 1991, Pub. L. 102-143, Title V. The principal purpose for which the information sought is to be used is to ensure that you have submitted to breath alcohol testing and to ensure that you are promptly notified in the event of noncompliance with the U.S. Department of Transportation breath alcohol testing requirements.

Submission of your SSN is not required by law and is voluntary. If you object to the use of your SSN in this form, you will not be denied any right, benefit, or privilege provided by law; a substitute number or other identifier will be assigned.

The information provided in this form may be disclosed, as a routine use, to a Federal, State, or local agency for authorized investigative or enforcement purposes or to a court or an administrative tribunal when the Government or one of its agencies is a party to a judicial proceeding before the court or involved in administrative proceedings before the tribunal.

PAPERWORK REDUCTION ACT NOTICE (as required by 5 CFR 1320.21)

Public reporting burden for this collection of information is estimated for each respondent to average: 1 minute/employee, 4 minutes/Breath Alcohol Technician. Individuals may send comments regarding these burden estimates, or any other aspect of this collection of information, including suggestions for reducing the burden, to U.S. Department of Transportation, Drug Enforcement and Program Compliance, Room 9404, 400 Seventh St., SW, Washington, D.C. 20590 or Office of Management and Budget, Paperwork Reduction Project, Room 3001, 725 Seventeenth St., NW, Washington, D.C. 20503.

COPY 2 - EMPLOYEE RETAINS

OMB No. 2105-0529
Exp. Date: 2/28/97

U.S. Department of Transportation (DOT) Breath Alcohol Testing Form

[THE INSTRUCTIONS FOR COMPLETING THIS FORM ARE ON THE BACK OF COPY 3]

▸ STEP 1: TO BE COMPLETED BY BREATH ALCOHOL TECHNICIAN

A. Employee Name _____
(PRINT) (First, M.I., Last)

B. SSN or Employee ID No. _____

C. Employer Name, Address, & Telephone No. _____

_____

_____ ( ) _____
Telephone Number

D. Reason for Test: ☐ Pre-employment ☐ Random ☐ Reasonable Suspicion/Cause ☐ Post-accident ☐ Return to Duty ☐ Follow-up

▸ STEP 2: TO BE COMPLETED BY EMPLOYEE

I certify that I am about to submit to breath alcohol testing required by U.S. Department of Transportation regulations and that the identifying information provided on this form is true and correct.

_____ Date ___/___/___
Signature of Employee Month Day Year

▸ STEP 3: TO BE COMPLETED BY BREATH ALCOHOL TECHNICIAN

I certify that I have conducted breath alcohol testing on the above named individual in accordance with the procedures established in the U.S. Department of Transportation regulation, 49 CFR Part 40, that I am qualified to operate the testing devices identified, and that the results are as recorded.

Screening test: Complete **only if** the testing device is not designed to **print** the following.

Test No.	Testing Device Name	Testing Device Serial Number	Time AM PM	Result

Confirmation test: Confirmation test results **MUST** be affixed to the back of each copy of this form.

Remarks: _____

_____

_____

_____ _____ Date ___/___/___
(PRINT) Breath Alcohol Technician's Name (First, M.I., Last) Signature of Breath Alcohol Technician Month Day Year

▸ STEP 4: TO BE COMPLETED BY EMPLOYEE

I certify that I have submitted to the breath alcohol test the results of which are accurately recorded on this form. I understand that I must not drive, perform safety-sensitive duties, or operate heavy equipment if the results are 0.02 or greater.

_____ Date ___/___/___
Signature of Employee Month Day Year

COPY 3 - BREATH ALCOHOL TECHNICIAN RETAINS

OMB No. 2105-0529
Exp. Date: 2/28/97

AFFIX SCREENING TEST RESULTS HERE (IF APPLICABLE) USE TAMPER-EVIDENT TAPE	AFFIX CONFIRMATION TEST RESULTS HERE USE TAMPER-EVIDENT TAPE

INSTRUCTIONS FOR COMPLETING THE U.S. DEPARTMENT OF TRANSPORTATION BREATH ALCOHOL TESTING FORM

NOTE: Use a ballpoint pen, press hard, and check all copies for legibility.

STEP 1 The Breath Alcohol Technician (BAT) completes the information required in this step. Be sure to print the employee's name and check the box identifying the reason for the test.

NOTE: If the employee refuses to provide SSN or I.D. number, be sure to indicate this in the remarks section in STEP 3. Proceed with STEP 2.

STEP 2 Instruct the employee to read, sign, and date the employee certification statement in STEP 2.

NOTE: If the employee refuses to sign the certification statement, do not proceed with the alcohol test. Contact the designated employer representative.

STEP 3 The Breath Alcohol Technician (BAT) completes the information required in this step. After conducting the alcohol screening test, do the following (as appropriate):

If the breath testing device used in conducting the screening test is not capable of printing the screening test information located on the front of this form (test number, testing device name, testing device serial number, time of test and results), complete this information in the space provided on the front of this form,

NOTE: Be sure to enter the result of the test exactly as it is indicated on the breath testing device, i.e., 0.00, 0.02, 0.04, etc.

OR, If the breath testing device used in conducting the screening test is capable of printing the screening test information located on the front of this form, affix the printed information in the space provided above. Be sure to use tamper-evident tape.

If the results of the screening test are less than 0.02, print, sign your name, and enter today's date in the space provided. Go to STEP 4.

If the results of the screening test are 0.02 or greater, a confirmation test must be administered in accordance with DOT regulations. An EVIDENTIAL BREATH TESTING device that is capable of printing confirmation test information must be used in conducting this test.

After conducting the alcohol confirmation test, affix the printed information in the space provided above. Be sure to use tamper-evident tape.

Print, sign your name, and enter the date in the space provided. Go to STEP 4.

STEP 4 Instruct the employee to read, sign, and date the employee certification statement in STEP 4.

NOTE: If the employee refuses to sign the certification statement in STEP 4, be sure to indicate this in the remarks section in STEP 3.

Forward Copy 1 (white page) to the employer.
Give Copy 2 (green page) to the employee.
Retain Copy 3 (blue page) for BAT records.

PAPERWORK REDUCTION ACT NOTICE (as required by 5 CFR 1320.21)

Public reporting burden for this collection of information is estimated for each respondent to average: 1 minute/employee, 4 minutes/Breath Alcohol Technician. Individuals may send comments regarding these burden estimates, or any other aspect of this collection of information, including suggestions for reducing the burden, to U.S. Department of Transportation, Drug Enforcement and Program Compliance, Room 9404, 400 Seventh St., SW, Washington, D.C. 20590 or Office of Management and Budget, Paperwork Reduction Project, Room 3001, 725 Seventeenth St., NW, Washington, D.C. 20503.

COPY 3 - BREATH ALCOHOL TECHNICIAN RETAINS

OMB No. 2105-0529
Exp. Date: 2/28/97

[59 FR 43013, Aug. 19, 1994]

PART 41—SEISMIC SAFETY

Sec.
41.100 Purpose and applicability.
41.105 Definitions.
41.110 New DOT owned buildings and additions to buildings.
41.115 New buildings to be leased for DOT occupancy.
41.117 Buildings built with Federal assistance.
41.119 DOT regulated buildings.
41.120 Acceptable model codes.
41.125 Judicial review.

AUTHORITY: 42 U.S.C. 7701 *et seq.*; 49 U.S.C. 322; E.O. 12699, 3 CFR, 1990 Comp., p. 269.

SOURCE: 58 FR 32871, June 14, 1993, unless otherwise noted.

§41.100 Purpose and applicability.

(a) This part implements the provisions of 49 U.S.C. 7701 *et seq.* and Executive Order (E.O.) 12699, ''Seismic Safety of Federal and Federally-Assisted or Regulated New Building Construction'' (3 CFR, 1990 Comp., p. 269). Under the Executive Order the DOT is given the responsibility for developing and implementing its own mission-appropriate and cost-effective regulations governing seismic safety.

(b) This part applies to new DOT owned buildings and to new DOT leased, assisted and regulated buildings. The purpose of this part is to reduce risk to lives of the building occupants, improve the capabilities of essential buildings to function during or after an earthquake, and to reduce earthquake losses of public buildings and investments.

(c) This part may be further implemented by the DOT Operating Administrations.

§41.105 Definitions.

As used in this part—

Operating Administration includes the Office of the Secretary.

DOT means the U.S. Department of Transportation.

§41.110 New DOT owned buildings and additions to buildings.

(a) DOT Operating Administrations responsible for the design and construction of new DOT Federally owned buildings will ensure that each building is designed and constructed in accord with the seismic design and construction standards set out in §41.120 of this part.

(b) This section pertains to all building projects for which development of detailed plans and specifications was initiated after January 5, 1990. It applies to additions to existing buildings as well as to new buildings. It applies worldwide.

(c) For DOT Federally owned buildings, a certification of compliance with the seismic design and construction requirements of this part is required prior to the acceptance of the building. Such statements of compliance may include the engineer's and architect's authenticated verifications of seismic design codes, standards, and practices used in the design and construction of the building, construction observation reports, local or state building department plan review documents, or other documents deemed appropriate by the DOT Operating Administration.

§41.115 New buildings to be leased for DOT occupancy.

(a) DOT Operating Administrations responsible for the design and construction of new buildings to be leased for DOT occupancy or use will ensure that each building is designed and constructed in accord with the seismic design and construction standards set out in §41.120 of this part.

(b) This section pertains to all new building projects for which the agreement covering development of detailed plans and specifications was executed after January 5, 1990.

(c) For new Federally leased buildings, a certification of compliance with the seismic design and construction requirements of this part is required prior to the acceptance of the building. Such statements of compliance may include the engineer's and architect's authenticated verifications of seismic design codes, standards, and practices used in the design and construction of the building, construction observation reports, local or state building department plan review documents, or other documents deemed appropriate by the DOT Operating Administration.

§ 41.117 Buildings built with Federal assistance.

(a) Each DOT Operating Administration assisting in the financing, through Federal grants or loans, or guaranteeing the financing, through loan or mortgage insurance programs, of newly constructed buildings will ensure that any building constructed with such assistance is constructed in accord with seismic standards set out in § 41.120 of this part.

(b) This section applies to new buildings and additions to existing buildings financed in whole or in part through Federal grants or loans administered by DOT Operating Administrations, or through guaranteed financing through loan or mortgage insurance programs administered by DOT Operating Administrations.

(c) Any building constructed with Federal financial assistance, after July 14, 1993 must be designed and constructed in accord with seismic standards approved by the DOT operating Administration under § 41.120 of this part in order to be eligible for Federal financial assistance.

(d) For buildings built with Federal financial assistance, a certification of compliance with the seismic design and construction requirements of this part is required prior to the furnishing of such assistance. Such statements of compliance may include the engineer's and architect's authenticated verifications of seismic design codes, standards, and practices used in the design and construction of the building, construction observation reports, local or state building department plan review documents, or other documents deemed appropriate by the DOT Operating Administration.

§ 41.119 DOT regulated buildings.

(a) Each DOT Operating Administration with responsibility for regulating the structural safety of buildings and additions to existing buildings will ensure that each DOT regulated building is designed and constructed in accord with seismic design and construction standards as provided by this part.

(b) This section pertains to all new building projects for which development of detailed plans and specifications begin after July 14, 1993.

(c) Any building for which a DOT Operating Administration responsible for regulating the structural safety must comply with the seismic design and construction standards in this part.

(d) For DOT regulated buildings a certification of compliance with the seismic design and construction requirements of this part is required prior to the acceptance of the building. Such statements of compliance may include the engineer's and architect's authenticated verification of seismic design codes, standards, and practices used in the design and construction of the building, construction observation reports, local or state building department plan review documents, or other documents deemed appropriate by the DOT Operating Administration.

§ 41.120 Acceptable model codes.

(a) This section describes the standards that must be used to meet the seismic design and construction requirements of this part.

(b)(1) The following are model codes which have been found to provide a level of seismic safety substantially equivalent to that provided by use of the 1988 National Earthquake Hazards Reduction Program (NEHRP) Recommended Provisions (Copies are available from the Office of Earthquakes and Natural Hazards, Federal Emergency Management Agency, 500 C Street, SW., Washington, DC 20472.):

(i) The 1991 International Conference of Building Officials (ICBO) Uniform Building Code, published by the International Conference of Building Officials, 5360 South Workman Mill Rd., Whittier, Cal. 90601;

(ii) The 1992 Supplement to the Building Officials and Code Administrators International (BOCA) National Building Code, published by the Building Officials and Code Administrators, 4051 West Flossmoor Rd., Country Club Hills, Ill. 60478–5795; and

(iii) The 1992 Amendments to the Southern Building Code Congress (SBCC) Standard Building Code, published by the Southern Building Code Congress International, 900 Montclair Rd., Birmingham, Ala. 35213–1206.

(2) Versions of the NEHRP seismic maps have been adopted along with the NEHRP Recommended Provisions into

the BOCA National and SBCC Standard building codes. The seismic zone map in the ICBO Uniform Building Code is also based on one of the USGS maps of horizontal ground acceleration. However, the ICBO map should be used only with the ICBO code. Also, it is not appropriate to use the NEHRP maps with the ICBO Uniform Building Code, because the design requirements of building codes are keyed to the numerical values of the map they reference.

(c) Revisions to the model codes listed in paragraph (b) of this section that are substantially equivalent to or exceed the then current or immediately preceding edition of the NEHRP recommended provisions, as it is updated, may be approved by a DOT Operating Administration to meet the requirements in this part.

(d) State, county, local, or other jurisdictional building ordinances adopting and enforcing the model codes, listed in paragraph (b) of this section, in their entirety, without significant revisions or changes in the direction of less seismic safety, meet the requirements in this part. For ordinances that do not adopt the model codes listed in paragraph (b) of this section, substantial equivalency of the ordinances to the seismic safety level contained in the NEHRP recommended provisions must be determined by the DOT Operating Administration before the ordinances may be used to meet the requirements of this part.

(e) DOT Operating Administrations that, as of January 5, 1990, required seismic safety levels higher than those imposed by this part in new building construction programs will continue to maintain such levels in force.

(f) Emergencies. Nothing in this part applies to assistance provided for emergency work or for assistance essential to save lives and protect property and public health and safety performed pursuant to sections 402, 403, 502, and 503 of the Robert T. Stafford Disaster Relief and Emergency Assistance Act (Stafford Act), 42 U.S.C. 5170a, 5170b, 5192, and 5193, or for temporary housing assistance programs and individual and family grants performed pursuant to Sections 408 and 411 of the Stafford Act, 42 U.S.C. 5174 and 5178. However, this part applies to other provisions of the Stafford Act after a Presidentially declared major disaster or emergency when assistance actions involve new construction or total replacement of a building.

§41.125 Judicial review.

Nothing in this part is intended to create any right or benefit, substantive or procedural, enforceable at law by a party against the DOT, its Operating Administrations, its officers, or any person.

PART 71—STANDARD TIME ZONE BOUNDARIES

Sec.
71.1 Limits defined; exceptions authorized for certain rail operating purposes only.
71.2 Annual advancement of standard time.
71.3 Atlantic zone.
71.4 Eastern zone.
71.5 Boundary line between eastern and central zones.
71.6 Central zone.
71.7 Boundary line between central and mountain zones.
71.8 Mountain zone.
71.9 Boundary line between mountain and Pacific zones.
71.10 Pacific zone.
71.11 Alaska zone.
71.12 Hawaii-Aleutian zone.
71.13 Samoa zone.

AUTHORITY: Secs. 1–4, 40 Stat. 450, as amended; sec. 1, 41 Stat. 1446, as amended; secs. 2–7, 80 Stat. 107, as amended; 100 Stat. 764; Act of Mar. 19, 1918, as amended by the Uniform Time Act of 1966 and Pub. L. 97–449, 15 U.S.C. 260–267; Pub. L. 99–359; 49 CFR 1.59(a), unless otherwise noted.

SOURCE: Amdt. 71–11, 35 FR 12318, Aug. 1, 1970, unless otherwise noted.

§71.1 Limits defined; exceptions authorized for certain rail operating purposes only.

(a) This part prescribes the geographic limits of each of the eight standard time zones established by section 1 of the Standard Time Act, as amended by section 4 of the Uniform Time Act of 1966 (15 U.S.C. 261). It also contains lists of operating exceptions granted for specified rail carriers, whose operations cross the time zone boundaries prescribed by this part, authorizing them to carry the standard of time on which the major portion of a

particular operation is conducted into an adjoining time zone.

(b) Any rail carrier whose operations cross a time zone boundary prescribed by this part may apply for an operating exception to the General Counsel, Department of Transportation, Washington, DC 20590. However, each rail carrier for which an operating exception is granted shall, in its advertisements, time cards, station bulletin boards, and other publications, show arrival and departure times in terms of the standard time for the place concerned.

(c) The time zones established by the Standard Time Zone Act, as amended by the Uniform Time Act of 1966, are Atlantic, eastern, central, mountain, Pacific, Alaska, Hawaii-Aleutian, and Samoa.

[Amdt. 71–11, 35 FR 12318, Aug. 1, 1970, as amended by Amdt. 71–21, 52 FR 41631, Nov. 18, 1986]

§ 71.2 Annual advancement of standard time.

(a) The Uniform Time Act of 1966 (15 U.S.C. 260a(a)), as amended, requires that the standard time of each State observing Daylight Saving Time shall be advanced 1 hour beginning at 2:00 a.m. on the first Sunday in April of each year and ending on the last Sunday in October. This advanced time shall be the standard time of each zone during such period. The Act authorizes any State to exempt itself from this requirement. States in two or more time zones may exempt the easternmost time zone portion from this requirement.

(b) Section 3(b) of the Uniform Time Act of 1966 (15 U.S.C. 260a(b)) provides that ''it is the express intent of Congress * * * to supersede any and all laws of the States or political subdivisions thereof insofar as they may now or hereafter provide for advances in time or changeover dates different from those specified in [section 3(a) of that Act]'', which are those specified in paragraph (a) of this section.

[Amdt. 71–11, 35 FR 12318, Aug. 1, 1970, as amended by Amdt. 71–21, 52 FR 41631, Nov. 18, 1986]

§ 71.3 Atlantic zone.

The first zone, the Atlantic standard time zone, includes that part of the United States that is between 52°30″ W. longitude and 67°30″ W. longitude and that part of the Commonwealth of Puerto Rico that is west of 67°30″ W. longitude, but does not include any part of the State of Maine.

§ 71.4 Eastern zone.

The second zone, the eastern standard time zone, includes that part of the United States that is west of 67°30″ W. longitude and east of the boundary line described in § 71.5, and includes all of the State of Maine, but does not include any part of the Commonwealth of Puerto Rico.

§ 71.5 Boundary line between eastern and central zones.

(a) *Minnesota-Michigan-Wisconsin.* From the junction of the western boundary of the State of Michigan with the boundary between the United States and Canada northerly and easterly along the west line of Gogebic County to the west line of Ontonagon County; thence south along the west line of Ontonagon County to the north line of Gogebic County; thence southerly and easterly along the north line of Gogebic County to the west line of Iron County; thence north along the west line of Iron County to the north line of Iron County; thence east along the north line of Iron County to the east line of Iron County; thence south along the east line of Iron County to the north line of Dickinson County; thence east along the north line of Dickinson County to the east line of Dickinson County; thence south along the east line of Dickinson County to the north line of Menominee County; thence east along the north line of Menominee County to the east line of Menominee County; thence southerly and easterly along the east line of Menominee County to Lake Michigan; thence east to the western boundary of the State of Michigan; thence southerly and easterly along the western boundary of the State of Michigan to a point in the middle of Lake Michigan opposite the main channel of Green Bay; thence southerly along the western boundary of the State of Michigan to

its junction with the southern boundary thereof and the northern boundary of the State of Indiana.

(b) *Indiana-Illinois.* From the junction of the western boundary of the State of Michigan with the northern boundary of the State of Indiana easterly along the northern boundary of the State of Indiana to the east line of LaPorte County; thence southerly along the east line of LaPorte County to the north line of Starke County; thence west along the north line of Starke County to the west line of Starke County; thence South along the west line of Starke County to the south line of Starke County; thence west along the south line of Starke County to the east line of Jasper County; thence south along the east line of Jasper County to the south line of Jasper County; thence west along the south lines of Jasper and Newton Counties to the western boundary of the State of Indiana; thence south along the western boundary of the State of Indiana to the north line of Gibson County; thence easterly and southerly along the north line of Gibson County to the east line of Gibson County; thence south along the east line of Gibson County to the north line of Warrick County; thence easterly and southerly along the north lines of Warrick and Spencer Counties to the east line of Spencer County; thence southerly along the east line of Spencer County to the Indiana-Kentucky boundary.

(c) *Kentucky.* From the junction of the east line of Spencer County, Ind., with the Indiana-Kentucky boundary easterly along that boundary to the west line of Meade County, Ky.; thence southeasterly and southwesterly along the west lines of Meade and Hardin Counties to the southwest corner of Hardin County; thence along the south lines of Hardin and Larue Counties to the northwest corner of Taylor County; thence southeasterly along the west (southwest) line of Taylor County and northeasterly along the east (southeast) line of Taylor County to the west line of Casey County; and thence southerly along the west and south lines of Casey, Pulaski, and McCreary Counties to the Kentucky-Tennessee boundary.

(d) *Tennessee.* From the junction of the west line of McCreary County, Ky., with the Kentucky-Tennessee boundary westerly along that boundary to the west line of Scott County, Tenn.; thence southerly along the west line of Scott County, the north and west lines of Morgan County, and the north line of Roane County to the north line of Rhea County; thence northwesterly along the north line of Rhea County; and thence southwesterly along the west lines of Rhea and Hamilton Counties to the Tennessee-Georgia boundary.

(e) *Georgia-Alabama.* From the junction of the west line of Hamilton County, Tenn., with the Tennessee-Georgia boundary westerly along that boundary to its junction with the Alabama-Georgia boundary; thence southerly along that boundary and the Florida-Georgia boundary to the southwest corner of the State of Georgia.

(f) *Florida.* From the southwest corner of the State of Georgia to the midpoint of the Apalachicola River on the downstream side of Jim Woodruff Dam; thence southerly along the middle of the main channel of the Apalachicola River to its intersection with the Jackson River; thence westerly along the center of the Jackson River to its intersection with the Intracoastal Waterway; thence westerly along the center of the Intracoastal Waterway to the west line of Gulf County; thence southerly along the west line of Gulf County to the Gulf of Mexico.

(g) [Reserved]

(h) *Municipalities on boundary line.* All municipalities located upon the zone boundary line described in this section are in the central standard time zone.

[Amdt. 71–11, 35 FR 12318, Aug. 1, 1970, as amended by Amdt. 71–12, 37 FR 11972, June 16, 1972; Amdt. 71–13, 38 FR 9229, Apr. 12, 1973; Amdt. 71–14, 38 FR 13725, May 25, 1973; Amdt. 77–13, 42 FR 56610, Oct. 27, 1977; Amdt. 91–17, 56 FR 52003, Oct. 17, 1991]

§71.6 Central zone.

The third zone, the central standard time zone, includes that part of the United States that is west of the boundary line between the eastern and central standard time zones described in §71.5 and east of the boundary line

between the central and mountain standard time zones described in § 71.7.

§ 71.7 Boundary line between central and mountain zones.

(a) *Montana-North Dakota.* Beginning at the junction of the Montana-North Dakota boundary with the boundary of the United States and Canada southerly along the Montana-North Dakota boundary to the Missouri River; thence southerly and easterly along the middle of that river to the midpoint of the confluence of the Missouri and Yellowstone Rivers; thence southerly and easterly along the middle of the Yellowstone River to the north boundary of T. 150 N., R. 104 W.; thence east to the northwest corner of T. 150 N., R. 102 W.; thence south to the southwest corner of T. 149 N., R. 102 W.; thence east to the northwest corner of T. 148 N., R. 102 W.; thence south to the northwest corner of 147 N., R. 102 W.; thence east to the southwest corner of T. 148 N., R. 101 W., thence south to the middle of the Little Missouri; thence easterly and northerly along the middle of that river to the midpoint of its confluence with the Missouri River; thence southerly and easterly along the middle of the Missouri River to the midpoint of its confluence with the northern land boundary of Oliver County; thence west along the northern county line to the northwest boundary; thence south along the western county line to the southwest boundary; thence east along the southern county line to the northwest corner of T. 140 N., R. 83 W.; thence south to the southwest corner of T. 140 N., R. 82 W.; thence east to the southeast corner of T. 140 N., R. 83 W.; thence south to the middle of the Heart River; thence easterly and northerly along the middle of that river to the southern boundary of T. 139 N., R. 82 W.; thence east to the middle of the Heart River; thence southerly and easterly along the middle of that river to the midpoint of the confluence of the Heart and Missouri Rivers; thence southerly and easterly along the middle of the Missouri River to the northern boundary of T. 130 N., R. 80 W.; thence west to the northwest corner of T. 130 N., R. 80 W.; thence south to the North Dakota-South Dakota boundary; thence easterly along that boundary to the middle of the Missouri River.

(b) *South Dakota.* From the junction of the North Dakota-South Dakota boundary with the Missouri River southerly along the main channel of that river to the crossing of the Chicago & North Western Railway near Pierre; thence southwesterly to the northeast corner of T. 1 S., R. 28 E. in Jones County; thence south along the range line between Rs. 28 and 29 E. to the north line of Mellette County; thence east along the north line of Mellette County to the west line of Tripp County; thence south along the west line of Tripp County to the South Dakota-Nebraska boundary.

(c) *Nebraska.* From the junction of the west line of Tripp County, South Dakota with the South Dakota-Nebraska boundary west along that boundary to the west line of R. 30 W.; thence south along the range line between Rs. 30 and 31 W. to the southwest corner of sec. 19, T. 33 N., R. 30 W.; thence easterly along section lines to the northeast corner of sec. 29, T. 33 N., R. 30 W.; thence southerly along section lines with their offsets to the northeast corner of sec. 17, T. 32 N., R. 30 W.; thence westerly along section lines to the northwest corner of sec. 18, T. 32 N., R. 30 W.; thence southerly along the range line to the southwest corner of T. 31 N., R. 30 W.; thence easterly along the township line to the northeast corner of T. 30 N., R. 30 W.; thence southerly along the range line to the southwest corner of T. 29 N., R. 29 W.; thence westerly along the township line to the northwest corner of sec. 4, T. 28 N., R. 30 W.; thence southerly along section lines to the southwest corner of sec. 33, T. 28 N., R. 30 W.; thence easterly along the township line to the northeast corner of sec. 4, T. 27 N., R. 30 W.; thence southerly along section lines to the southwest corner of sec. 22, T. 26 N., R. 30 W.; thence easterly along section lines to the southeast corner of sec. 24, T. 26 N., R. 30 W.; thence southerly along the range line to the north line of Thomas County; thence westerly along the north line of Thomas County to the west line of Thomas County; thence south along the west line of Thomas County to the north line of McPherson County;

thence west along the north line of McPherson County to the west line of McPherson County; thence south along the west line of McPherson County to the north line of Keith County; thence east along the north line of Keith County to the west line of Lincoln County; thence south along the west line of Lincoln County to the north line of Hayes County; thence west along the north lines of Hayes County to the west line of Hayes County; thence south along the west line of Hayes and Hitchcock Counties to the Nebraska-Kansas boundary.

(d) *Kansas-Colorado.* From the junction of the west line of Hitchcock County, Nebraska, with the Nebraska-Kansas boundary westerly along that boundary to the northwest corner of the State of Kansas; thence southerly along Kansas-Colorado boundary to the north line of Sherman County, Kansas; thence easterly along the north line of Sherman County to the east line of Sherman County; thence southerly along the east line of Sherman County to the north line of Logan County; thence westerly along the north line of Logan County to the east line of Wallace County; thence southerly along the east line of Wallace County to the north line Wichita County; thence westerly along the north line of Wichita County; thence westerly along the north line of Wichita County to the east line of Greeley County; thence southerly along the east lines of Greeley County and Hamilton Counties; thence westerly along the south line of Hamilton County to the Kansas-Colorado boundary; thence southerly along the Kansas Colorado boundary to the junction of that boundary with the north boundary of the State of Oklahoma.

(e) *Oklahoma-Texas-New Mexico.* From the junction of the Kansas-Colorado boundary with the northern boundary of the State of Oklahoma westerly along the Colorado-Oklahoma boundary to the northwest corner of the State of Oklahoma; thence southerly along the west boundary of the State of Oklahoma and the west boundary of the State of Texas to the southeast corner of the State of New Mexico; thence westerly along the Texas-New Mexico boundary to the east line of Hudspeth County, Tex.; thence southerly along the east line of Hudspeth County, Tex., to the boundary between the United States and Mexico.

(f) [Reserved]

(g) *Points on boundary line.* All municipalities located upon the zone boundary line described in this section are in the mountain standard time zone, except Murdo, S. Dak., which is in the central standard time zone.

[Amdt. 71–11, 35 FR 12318, Aug. 1, 1970, as amended by Amdt. 71–14, 38 FR 13725, May 25, 1973; Amdt. 71–16, 43 FR 42763, Sept. 21, 1978; 55 FR 30914, July 30, 1990; 57 FR 48339, Oct. 23, 1992]

§71.8 Mountain zone.

The fourth zone, the mountain standard time zone, includes that part of the United States that is west of the boundary line between the central and mountain standard time zones described in §71.7 and east of the boundary line between the mountain and Pacific standard time zones described in §71.9.

§71.9 Boundary line between mountain and Pacific zones.

(a) *Montana-Idaho-Oregon.* From the junction of the Idaho-Montana boundary with the boundary between the United States and Canada southerly along the Idaho-Montana boundary to the boundary line between Idaho County, Idaho, and Lemhi County, Idaho; thence southwesterly along the boundary line between those two counties to the main channel of the Salmon River; thence westerly along the main channel of the Salmon River to the Idaho-Oregon boundary; thence southerly along that boundary to the boundary line between Baker County, Oreg., and Malheur County, Oreg.; thence westerly along the north line of Malheur County to the northwest corner of Malheur County; thence southerly along the west line of Malheur County to the southwest corner of T. 35 S., R. 37 E.; thence east to the Idaho-Oregon boundary; thence south along that boundary to the southwest corner of the State of Idaho; thence easterly along the Idaho-Nevada boundary to the northeast corner of the State of Nevada.

(b) *Utah-Nevada-Arizona-California.* From the northeast corner of the State of Nevada southerly along the Utah-Nevada boundary, the Nevada-Arizona boundary, and the Arizona-California boundary to the boundary between the United States and Mexico.

(c) [Reserved]

(d) *Points on boundary line.* All municipalities located upon the zone boundary line described in this section are in the mountain standard time zone.

[Amdt. 71–11, 35 FR 12318, Aug. 1, 1970, as amended by Amdt. 71–14, 38 FR 13725, May 25, 1973]

§ 71.10 Pacific zone.

The fifth zone, the Pacific standard time zone, includes that part of the continental United States that is west of the boundary line between the mountain and Pacific standard time zones described in § 71.9, but does not include any part of the State of Alaska.

(Act of March 19, 1918, as amended by the Uniform Time Act of 1966 and Pub. L. 97–449, 15 U.S.C. 260–264; 49 CFR 1.59(a)).

[Amdt. 71–19, 48 FR 43281, Sept. 22, 1983]

§ 71.11 Alaska zone.

The sixth zone, the Alaska standard time zone, includes the entire State of Alaska, except as provided in § 71.12 of this title.

(Act of March 19, 1918, as amended by the Uniform Time Act of 1966 and Pub. L. 97–449, 15 U.S.C. 260–264; 49 CFR 1.59(a)).

[Amdt. 71–19, 48 FR 43281, Sept. 22, 1983, as amended by Amdt. 71–20, 48 FR 55289, Dec. 12, 1983]

§ 71.12 Hawaii–Aleutian zone.

The seventh zone, the Hawaii–Aleutian standard time zone, includes the entire State of Hawaii and, in the State of Alaska, that part of the Aleutian Islands that is west of 169 degrees 30 minutes west longitude.

(Act of March 19, 1918, as amended by the Uniform Time Act of 1966 and Pub. L. 97–449, 15 U.S.C. 260–264; 49 CFR 1.59(a)).

[Amdt. 71–19, 48 FR 43281, Sept. 22, 1983, as amended by Amdt. 71–20, 48 FR 55289, Dec. 12, 1983]

§ 71.13 Samoa zone.

The eighth zone, the Samoa standard time zone, includes that part of the United States that is between 169 degrees 30 minutes west longitude and 172 degrees 30 minutes west longitude, but does not include any part of the States of Hawaii and Alaska.

(Act of March 19, 1918, as amended by the Uniform Time Act of 1966 and Pub. L. 97–449, 15 U.S.C. 260–264; 49 CFR 1.59(a)).

[Amdt. 71–19, 48 FR 43281, Sept. 22, 1983, as amended by Amdt. 71–20, 48 FR 55289, Dec. 12, 1983]

PART 79—MEDALS OF HONOR

Sec.
79.1 Scope.
79.3 Application.
79.5 Investigation.
79.7 Award.
79.9 Design.

AUTHORITY: 49 U.S.C. 80504.

SOURCE: 61 FR 17578, Apr. 22, 1996, unless otherwise noted.

§ 79.1 Scope.

(a) This part implements 49 U.S.C. 80504, which authorizes the President of the United States to award a bronze medal for bravery to any person who, by extreme daring, risks his/her life in trying to prevent, or to save the life of a person in, a grave accident/incident in the United States that involves an interstate rail carrier or a motor vehicle being operated on public highways.

(b) The actions for which the medal may be awarded must reflect such unusual daring and bravery that a person would not normally be expected to perform them as a regular part of his/her regular work or vocation.

§ 79.3 Application.

(a) Any person may apply for the award of the medal described in § 79.1, but only on behalf of another person, by writing to the Secretary of Transportation, Attention: Medals of Honor, within two (2) years of the action that is the subject of the application.

(b) Although no application form is required, the following information must be provided:

(1) Name, address, and telephone number of the person submitting the application.

(2) Name, address, and telephone number of the person on whose behalf the application is submitted.

(3) Date, time, place, and weather conditions of the action that is the subject of the application.

(4) Identification of rail or motor carrier involved, or of operator of motor vehicles involved.

(5) Identification of any public or private authority that investigated the accident/incident involved.

(6) Name, address, and telephone number of any witness to the action that is the subject of the application.

(7) Detailed description of the action that is the subject of the application, including why the person submitting the application thinks that the action merits the extraordinary recognition embodied in the Medal of Honor.

(c) An application and any documentary or other evidence supporting it must be supported by oath or affirmation, or by the signer's acknowledgment that a knowingly false statement is punishable as perjury.

§ 79.5 Investigation.

The Department of Transportation may make any investigation of an application that it deems appropriate, including the taking of testimony under oath or affirmation.

§ 79.7 Award.

If the Secretary of Transportation decides that it is warranted, the Secretary shall award the Medal on behalf of and in the name of the President of the United States.

§ 79.9 Design.

The Department is authorized to adopt and revise the existing designs for the award, rosette, and ribbon provided for by statute.

PART 80—CREDIT ASSISTANCE FOR SURFACE TRANSPORTATION PROJECTS

Sec.

80.1 Purpose.
80.3 Definitions.
80.5 Limitations on assistance.
80.7 Application process.
80.9 Federal requirements.
80.11 Investment-grade ratings.
80.13 Threshold criteria.
80.15 Selection criteria.
80.17 Charges.
80.19 Reporting requirements.

AUTHORITY: secs. 1501 *et seq.*, Pub. L. 105–178, 112 Stat. 107, 241, as amended; 23 U.S.C. 181–189 and 315; 49 CFR 1.48, 1.49, and 1.51.

SOURCE: 64 FR 29750, June 2, 1999, unless otherwise noted.

§ 80.1 Purpose.

This part implements a Federal credit assistance program for surface transportation projects.

§ 80.3 Definitions.

The following definitions apply to this part:

Conditional term sheet means a contractual agreement between the U.S. Department of Transportation (DOT) and the project sponsor (and the lender, if applicable) by which the DOT reserves TIFIA funding for a specific project and commits to providing Federal credit assistance to that project at a future point in time upon satisfaction of specified conditions and subject to the future availability of obligation authority. The DOT will not legally obligate budget authority until those conditions are met. Upon satisfaction of those conditions, the conditional term sheet can be amended and/or restated to trigger an obligation of funds.

Credit agreement means a contractual agreement between the DOT and the project sponsor (and the lender, if applicable) that formalizes the terms and conditions established in the term sheet (or conditional term sheet) and authorizes the execution of a secured loan, loan guarantee, or line of credit.

Eligible project costs mean amounts substantially all of which are paid by, or for the account of, an obligor in connection with a project, including the cost of:

(1) Development phase activities, including planning, feasibility analysis, revenue forecasting, environmental review, permitting, preliminary engineering and design work, and other pre-construction activities;

(2) Construction, reconstruction, rehabilitation, replacement, and acquisition of real property (including land related to the project and improvements to land), environmental mitigation, construction contingencies, and acquisition of equipment; and

(3) Capitalized interest necessary to meet market requirements, reasonably required reserve funds, capital issuance expenses, and other carrying costs during construction.

Federal credit instrument means a secured loan, loan guarantee, or line of credit authorized to be made available under this subchapter with respect to a project.

Investment-grade rating means a rating category of BBB minus, Baa3, or higher assigned by a rating agency to project obligations offered into the capital markets.

Lender means any non-Federal qualified institutional buyer (as defined in 17 CFR 230.144A(a)), known as Rule 144A(a) of the Securities and Exchange Commission and issued under the Securities Act of 1933 (15 U.S.C. 77a *et seq.*), including:

(1) A qualified retirement plan (as defined in section 4974(c) of the Internal Revenue Code of 1986, 26 U.S.C. 4974(c)) that is a qualified institutional buyer; and

(2) A governmental plan (as defined in section 414(d) of the Internal Revenue Code of 1986, 26 U.S.C. 414(d)) that is a qualified institutional buyer.

Line of credit means an agreement entered into by the Secretary with an obligor under section 184 of title 23 to provide a direct loan at a future date upon the occurrence of certain events.

Loan guarantee means any guarantee or other pledge by the Secretary to pay all or part of the principal of and interest on a loan or other debt obligation issued by an obligor and funded by a lender.

Local servicer means:

(1) A State infrastructure bank established under title 23; or

(2) A State or local government or any agency of a State or local government that is responsible for servicing a Federal credit instrument on behalf of the Secretary.

Obligor means a party primarily liable for payment of the principal of or interest on a Federal credit instrument, which party may be a corporation, partnership, joint venture, trust, or governmental entity, agency, or instrumentality.

Project means:

(1) Any surface transportation project eligible for Federal assistance under title 23 or chapter 53 of title 49;

(2) A project for an international bridge or tunnel for which an international entity authorized under Federal or State law is responsible;

(3) A project for intercity passenger bus or rail facilities and vehicles, including facilities and vehicles owned by the National Railroad Passenger Corporation, and components of magnetic levitation transportation systems; and

(4) A project for publicly owned intermodal surface freight transfer facilities, other than seaports and airports, if the facilities are located on or adjacent to National Highway System routes or connections to the National Highway System.

Project obligation means any note, bond, debenture, or other debt obligation issued by an obligor in connection with the financing of a project, other than a Federal credit instrument.

Project sponsor, for the purposes of this part, means an applicant for TIFIA assistance or an obligor, as appropriate.

Rating agency means a bond rating agency identified by the Securities and Exchange Commission as a Nationally Recognized Statistical Rating Organization.

Secured loan means a direct loan or other debt obligation issued by an obligor and funded by the Secretary in connection with the financing of a project under section 183 of title 23.

State means any one of the fifty states, the District of Columbia, or Puerto Rico.

Subsidy amount means the amount of budget authority sufficient to cover the estimated long-term cost to the Federal Government of a Federal credit instrument, calculated on a net present value basis, excluding administrative costs and any incidental effects on governmental receipts or outlays in accordance with the provisions of the

Federal Credit Reform Act of 1990 (2 U.S.C. 661 *et seq.*).

Substantial completion means the opening of a project to vehicular or passenger traffic or a comparable event as determined by the Secretary and specified in the credit agreement.

Term sheet means a contractual agreement between the DOT and the project sponsor (and the lender, if applicable) that sets forth the key business terms and conditions of a Federal credit instrument. Execution of this document represents a legal obligation of budget authority.

TIFIA means the Transportation Infrastructure Finance and Innovation Act of 1998, Pub. L. 105–178, 112 Stat. 107, 241 (1998).

§ 80.5 Limitations on assistance.

(a) The total amount of credit assistance offered to any project under this part shall not exceed 33 percent of the anticipated eligible project costs, as measured on an aggregate cash (year-of-expenditure) basis.

(b) Costs incurred prior to a project sponsor's submission of an application for credit assistance may be considered in calculating eligible project costs only upon approval of the Secretary. In addition, applicants shall not include application charges or any other expenses associated with the application process (such as charges associated with obtaining the required preliminary rating opinion letter) among the eligible project costs.

(c) No costs financed internally or with interim funding may be refinanced under this part later than a year following substantial completion of the project.

(d)(1) Within the overall credit assistance limitation of 33 percent of eligible project costs, the Secretary may consider making future-year or multi-year contingent commitments of budget authority and associated credit assistance for projects temporarily lacking certain requirements or with extended construction periods and financing needs. The TIFIA's effectiveness in stimulating private investment in transportation infrastructure depends, in large part, on investor recognition that TIFIA credit instruments represent solid and reliable Federal commitments. Therefore, the Secretary shall make any future-year or multi-year contingent commitment of funds for a project using a conditional term sheet. The conditional term sheet will resemble the standard term sheet that enables the obligation of budget authority, but will also specify the additional actions necessary to trigger subsequent obligation(s). The conditional term sheet will include fixed dates by which any requirements must be met in order for the reserved funding to be obligated.

(2) Upon execution of the conditional term sheet, the Secretary shall reserve budget authority attributable to the appropriate year(s). This reservation will ensure that a project with a conditional commitment will have a priority claim (along with that of any other projects receiving such contingent commitments) on budget authority becoming available in the specified year(s), provided that the project sponsor satisfies each condition outlined in the conditional term sheet. The Secretary will limit such reservations to not more than 50 percent of the budget authority becoming available in the applicable year(s). If a multi-year contingent commitment is made, each year's loan will be tied to distinct, clearly identified project segments or stages or other milestones as specified in the credit agreement.

(e) The obligor may draw upon the line of credit only if net project revenues (including, among other sources, any debt service reserve fund) are insufficient to pay costs specified in 23 U.S.C. 184(a)(2) under the line of credit, including debt service costs. Debt service costs include direct payments of principal and interest as well as reimbursements for such payments in the form of legally required deposits to a debt service reserve fund.

(f) The Secretary shall not obligate funds in favor of a project that has not received an environmental Categorical Exclusion, Finding of No Significant Impact, or Record of Decision.

§ 80.7 Application process.

(a) Public and private applicants for credit assistance under this part will be required to submit applications to

the DOT in order to be considered for approval by the Secretary.

(b) At a minimum, such applications shall provide:

(1) Documentation sufficient to demonstrate that the project satisfies each of the threshold criteria in § 80.13 and describe the extent to which the project satisfies each of the selection criteria in § 80.15;

(2) Background information on the project for which assistance is sought, such as the project's description, status of environmental and other major governmental permits and approvals, and construction schedule;

(3) Background information on the applicant (project sponsor);

(4) Historical information, if applicable, concerning the applicant's financial condition, including, for example, independently audited financial statements and certifications concerning bankruptcies or delinquencies on other debt; and

(5) Current financial information concerning both the project and the applicant, such as sources and uses of funds for the project and a forecast of cash flows available to service all debt instruments.

(c) An application for a project located in or sponsored by more than one State or other entity shall be submitted to the DOT by just one State or entity. The sponsoring States or entities shall designate a single obligor for purposes of applying for, receiving, and repaying TIFIA credit assistance.

(d) Each fiscal year for which Federal assistance is available under this part, the DOT shall publish a FEDERAL REGISTER notice to solicit applications for credit assistance. Such notice will specify the relevant due dates, the estimated amount of funding available to support TIFIA credit instruments for the current and future fiscal years, contact name(s), and other details for that year's application submissions and funding approvals.

§ 80.9 Federal requirements.

All projects receiving credit assistance under this part shall comply with:

(a) The relevant requirements of title 23, U.S.C., for highway projects, chapter 53 of title 49, U.S.C., for transit projects, and section 5333(a) of title 49 for rail projects, as appropriate;

(b) Title VI of the Civil Rights Act of 1964 (42 U.S.C. 2000d *et seq.*);

(c) The National Environmental Policy Act of 1969 (42 U.S.C. 4321 *et seq.*);

(d) The Uniform Relocation Assistance and Real Property Acquisition Policies Act of 1970 (42 U.S.C. 4601 *et seq.*); and

(e) Other Federal and compliance requirements as may be applicable.

§ 80.11 Investment-grade ratings.

(a) At the time a project sponsor submits an application, the DOT shall require a preliminary rating opinion letter. This letter is a conditional credit assessment from a rating agency that provides a preliminary indication of the project's overall creditworthiness and that specifically addresses the potential of the project's senior debt obligations to achieve an investment-grade rating. However, the DOT shall disburse funds under a secured (direct) loan or line of credit or extend a loan guarantee only after a formal credit agreement has been executed and the project's senior obligations have obtained a formal investment-grade rating.

(b) The full funding of a secured (direct) loan, loan guarantee, or line of credit shall be contingent on the assignment of an investment-grade rating by a nationally recognized bond rating agency to all project obligations that have a lien senior to that of the Federal credit instrument on the pledged security.

(c) Neither the preliminary rating opinion letter nor the formal credit rating should reflect the effect of bond insurance, unless that insurance provides credit enhancement that secures the TIFIA obligation.

§ 80.13 Threshold criteria.

(a) To be eligible to receive Federal credit assistance under this part, a project shall meet the following five threshold criteria:

(1) The project shall be consistent with the State transportation plan, if located in a metropolitan area shall be included in that area's metropolitan transportation plan, and shall appear in an approved State transportation

improvement program before the DOT and the project sponsor execute a term sheet or credit agreement that results in the obligation of funds;

(2) The State, local servicer, or other entity undertaking the project shall submit a project application to the Secretary of Transportation;

(3) A project shall have eligible project costs that are reasonably anticipated to equal or exceed the lesser of $100 million or 50 percent of the amount of Federal-aid highway funds apportioned for the most recently completed fiscal year to the State in which the project is located (in the case of a project principally involving the installation of Intelligent Transportation Systems (ITS), eligible project costs shall be reasonably anticipated to equal or exceed $30 million);

(4) Project financing shall be repayable, in whole or in part, from tolls, user fees or other dedicated revenue sources; and

(5) In the case of a project that is undertaken by an entity that is not a State or local government or an agency or instrumentality of a State or local government, the project that the entity is undertaking shall be included in the State transportation plan and an approved State Transportation Improvement Program as provided in paragraph (a)(1) of this section.

(b) With respect to paragraph (a)(3) of this section, for a project located in more than one State, the minimum cost threshold size shall be the lesser of $100 million or 50 percent of the amount of Federal-aid highway funds apportioned for the most recently completed fiscal year to the participating State that receives the least amount of such funds.

(c) With respect to paragraph (a)(4) of this section, the Secretary may accept general obligation pledges or general corporate promissory pledges and will determine the acceptability of other pledges and forms of collateral as dedicated revenue sources on a case-by-case basis. The Secretary shall not accept a pledge of Federal funds, regardless of source, as security for the TIFIA credit instrument.

§ 80.15 Selection criteria.

(a) The Secretary shall consider the following eight criteria in evaluating and selecting among eligible projects to receive credit assistance:

(1) The extent to which the project is nationally or regionally significant, in terms of generating economic benefits, supporting international commerce, or otherwise enhancing the national transportation system;

(2) The creditworthiness of the project, including a determination by the Secretary that any financing for the project has appropriate security features, such as a rate covenant, to ensure repayment;

(3) The extent to which such assistance would foster innovative public-private partnerships and attract private debt or equity investment;

(4) The likelihood that such assistance would enable the project to proceed at an earlier date than the project would otherwise be able to proceed;

(5) The extent to which the project uses new technologies, including Intelligent Transportation Systems (ITS), that enhance the efficiency of the project;

(6) The amount of budget authority required to fund the Federal credit instrument made available;

(7) The extent to which the project helps maintain or protect the environment; and

(8) The extent to which such assistance would reduce the contribution of Federal grant assistance to the project.

(b) In addition, 23 U.S.C. 182(b)(2)(B) conditions a project's approval for credit assistance on receipt of a preliminary rating opinion letter indicating that the project's senior debt obligations have the potential to attain an investment-grade rating.

(c) The Secretary shall evaluate each project's distinct public benefits and contribution to program goals according to each of the selection criteria specified in this section.

(d) In considering the selection criterion in paragraph (a)(8) of this section, the Secretary will give preference to projects for which the applicant's use of TIFIA credit assistance would reduce the applicant's degree of reliance on Federal grant assistance.

(e) The Secretary may also give preference to applications for loan guarantees rather than other forms of Federal credit assistance. This preference is consistent with Federal policy that, when Federal credit assistance is necessary to meet a Federal objective, loan guarantees should be favored over direct loans, unless attaining the Federal objective requires a subsidy, as defined by the Federal Credit Reform Act of 1990 (2 U.S.C. 661 *et seq.*), deeper than can be provided by a loan guarantee.

§ 80.17 Charges.

(a) The DOT will require a non-refundable application initiation charge for each project applying for credit assistance under TIFIA. The DOT may also require an additional credit processing charge for projects selected to receive assistance. Any required application initiation or credit processing charge must be paid by the project sponsor applying for TIFIA assistance and cannot be paid by another party on behalf of the project sponsor. The proceeds of any such charges will equal a portion of the costs to the Federal Government of soliciting and evaluating applications, selecting projects to receive assistance, and negotiating credit agreements. For fiscal year 1999, the DOT will require an application initiation charge of $5,000 for each project applying for credit assistance under TIFIA. The DOT will not require any credit processing charges for fiscal year 1999. For each application and approval cycle in fiscal year 2000 and beyond, the DOT may adjust the amount of the application initiation charge and will determine the appropriate amount of the credit processing charge on the basis of its program implementation experience. The DOT will publish these amounts in each FEDERAL REGISTER solicitation for applications.

(b) Applicants shall not include application initiation or credit processing charges or any other expenses associated with the application process (such as charges associated with obtaining the required preliminary rating opinion letter) among eligible project costs for the purpose of calculating the maximum 33 percent credit amount referenced in § 80.5(a).

(c) If, in any given year, there is insufficient budget authority to fund the credit instrument for a qualified project that has been selected to receive assistance under TIFIA, the DOT and the approved applicant may agree upon a supplemental charge to be paid by or on behalf of the approved applicant at the time of execution of the term sheet to reduce the subsidy cost of that project. No such charge may be included among eligible project costs for the purpose of calculating the maximum 33 percent credit amount referenced in § 80.5(a).

§ 80.19 Reporting requirements.

At a minimum, any recipient of Federal credit under this part shall submit an annual project performance report and audited financial statements to the DOT within 120 days following the recipient's fiscal year-end for each year during which the recipient's obligation to the Federal Government remains in effect. The DOT may conduct periodic financial and compliance audits of the recipient of credit assistance, as determined necessary by the Secretary. The specific credit agreement between the recipient of credit assistance and the DOT may contain additional reporting requirements.

PART 89—IMPLEMENTATION OF THE FEDERAL CLAIMS COLLECTION ACT

Subpart A—General

Sec.
89.1 Purpose.
89.3 Applicability.
89.5 Delegations of authority.
89.7 Exceptions to delegated authority.
89.9 Redelegation.
89.11 Standards for exercise of delegated authority.
89.13 Documentary evidence of compromise.
89.15 Regulations, reports, and supporting documentation.

Subpart B—Collection of Claims

89.21 Administrative collection.
89.23 Interest, late payment penalties, and collection charges.
89.25 Collection by administrative offset.
89.27 Referral for litigation.
89.29 Disclosure to commercial credit bureaus and consumer reporting agencies.
89.31 Use of professional debt collection agencies.

89.33 [Reserved]

Subpart C—Referral of Debts to IRS for Tax Refund Offset

89.37 Applicability and scope.
89.39 Administrative charges.
89.41 Notice requirement before offset.
89.43 Review within the Department.
89.45 Department determination.
89.47 Stay of offset.

AUTHORITY: Pub. L. 89–508; Pub. L. 89–365, secs. 3, 10, 11, 13(b), 31 U.S.C. 3701–3720A; Pub. L. 98–167; Pub. L. 98–369; Pub. L. 99–578; Pub. L. 101–552, 31 U.S.C. 3711(a)(2).

SOURCE: 53 FR 51238, Dec. 21, 1988, unless otherwise noted.

Subpart A—General

§89.1 Purpose.

This part implements the Federal Claims Collection Act of 1966, 31 U.S.C. 3701–3720 A, as amended primarily by the Debt Collection Act of 1982 (Pub. L. 97–365, 96 Stat. 1749) and the Debt Collection Amendments of 1986 (Pub. L. 99–578, 100 Stat. 3305). It supplements the Federal Claims Collection Standards (FCCS), 4 CFR parts 101–105, issued jointly by the Comptroller General of the United States and the Attorney General of the United States under 31 U.S.C. 3711(e)(2). Pursuant to the Federal Claims Collection Act, as amended, and the FCCS, this part sets forth procedures by which the Department of Transportation (DOT) and its operating elements (see 49 CFR 1.3) through designated officials:

(a) Collect claims owed to the United States arising from activities under its jurisdiction;

(b) Determine and collect interest and other charges on those claims;

(c) Compromise claims; and

(d) Refer unpaid claims for litigation.

§89.3 Applicability.

(a) The part applies to collection of all claims due the United States under the Federal Claims Collection Act of 1966 as amended by the Debt Collection Act of 1982 and the Debt Collection Amendments of 1986 (Pub. L. 99–578), arising from activities under the jurisdiction of DOT including amounts due the United States from fees, overpayments, fines, civil penalties, loans, damages, interest, and other sources.

(b) This part does not apply to collection, settlement or compromise of debts owed the United States pursuant to authority other than Title 31, Chapter 37, Subchapter II: for example, application of this part to the enforcement of contracts under 46 U.S.C. 1117, delegated to the DOT Maritime Administration, is not required.

(c) Section 89.23 (interest, late payment penalties, and collection charges) and §89.25 (collection by administrative offset) of this part do not apply to debts which other United States government agencies or state governments or units of general local government owe the Department (see 31 U.S.C. 3701(c)); however, other statutory or common law may provide legal authority. Neither does the proposed rule apply to recovery of debts owed by current or former employees of the United States governed by 5 U.S.C. 5514.

(d) Claims arising out of contracts that contain specific provisions relating to claims are governed by those specific provisions to the extent that those provisions comply with existing law and with 4 CFR chapter II.

(e) As used in this part, the terms debt and claims are interchangeable and have the meaning defined in 4 CFR 101.2(a). A debtor's liability arising out of a particular incident or adjudication exclusive of interest, administrative costs, and late payment penalties, is a single claim.

(f) Except as provided in paragraphs (b), (c) and (d) of this section the provisions of this part shall apply to the collection of all debts and claims owed to any DOT operating element. A claim arising from the assessment of civil penalty or fine is not subject to the procedures of this subpart until the claim has been reduced to a liquidated debt by a signed settlement agreement, a court order or judgment, or a final administrative determination.

§89.5 Delegations of authority.

The functions, powers, and duties of the Secretary of Transportation to attempt collection of claims, to compromise claims of the United States not exceeding $100,000 (excluding interest) and to suspend and terminate action to collect such claims are delegated to:

(a) The Assistant Secretary for Administration with respect to claims arising out of the activities of, or referred to, the Office of the Secretary; and

(b) The heads of other DOT operating elements with respect to claims arising out of the activities of, or referred to, their organizations.

[53 FR 51238, Dec. 21, 1988, as amended at 58 FR 6898, Feb. 3, 1993]

§ 89.7 Exceptions to delegated authority.

The authority delegated under § 89.5 does not apply to any claim:

(a) As to which there is an indication of (1) fraud; (2) the presentation of a false claim; or (3) misrepresentation on the part of the debtor or any other party having an interest in the claim;

(b) Based on tax statutes; or

(c) Arising from an exception made by the General Accounting Office in the account of an accountable officer.

§ 89.9 Redelegation.

Each officer to whom authority is delegated under § 89.5 may redelegate and authorize successive redelegations of the authority within the organization under his or her jurisdiction.

§ 89.11 Standards for exercise of delegated authority.

The authority delegated under § 89.5 shall be exercised in accordance with the standards for the collection and compromise of claims and for the suspension and termination of action to collect claims promulgated by the United States General Accounting Office and the United States Department of Justice, and published at 4 CFR chapter II, as those standards may be amended.

§ 89.13 Documentary evidence of compromise.

A compromise of any claim is not final or binding on the United States unless it is in writing, signed by an officer or employee authorized to compromise that claim.

§ 89.15 Regulations, reports, and supporting documentation.

(a) Each officer to whom authority is delegated under § 89.5 may promulgate regulations for the exercise of that authority within his or her organization. These regulations shall be revised, as necessary, to conform to any amendments to this part.

(b) Each officer to whom authority is delegated under § 89.5 shall furnish the following information to the Assistant Secretary for Administration:

(1) A copy of each redelegation of that authority.

(2) A semiannual report listing those claims compromised or with respect to which collection action has been suspended or terminated, specifying the name of the debtors, the amount of the claim, the nature of the claim, the type of action taken, and the general basis for the action taken.

(3) A copy of any implementing regulations governing the exercise of the authority delegated under § 89.5, and any amendments to those regulations.

(c) Each officer or employee to whom the Secretary's authority has been delegated or redelegated, before exercising such authority, shall acquire sufficient documentation to demonstrate that the action taken is in the best interests of the United States. This documentation will be retained with and treated as part of the file concerning the debt.

(d) The failure of any officer or employee to comply with this section does not limit or impair his or her exercise of authority.

Subpart B—Collection of Claims

§ 89.21 Administrative collection.

Except as provided differently by the DOT operating elements pursuant to § 89.3:

(a) DOT shall send a debtor a total of three progressively stronger written demands at not more than 30-day intervals, unless a response to the first or second demand indicates that a further demand would be futile or the debtor's response does not require rebuttal, or other pertinent information indicates that additional written demands would be unnecessary.

(b) The initial written demand for payment (and the notice of offset under § 89.25) shall inform the debtor of:

(1) The basis for the indebtedness and the debtor's right to obtain review (see §89.21(f) for details on review).

(2) The amount of the claim;

(3) That domestic and overseas payment in excess of ten thousand dollars or more shall be made by wire transfer through the Federal Reserve communications, commonly known as Fedwire, to the account of the U.S. Treasury in accordance with the instructions provided in the demand letter; payments originating in foreign countries shall be made by wire transfer to the extent practicable.

(4) The delinquency date, or the date by which payment is to be made (30 days from the date of mailing or hand delivery of the initial demand letter);

(5) The standard for interest, penalties, and administrative charges in accordance with 31 U.S.C. 3717, if payment is not received by the due date (see §89.23 for details regarding interest, collection charges, and late payment penalty charges);

(6) Where a notice of offset is concerned, the right to make voluntary payment before collection by offset begins (see §89.25).

(7) The possible reporting of the claim to commercial credit bureaus and consumer reporting agencies; however a notice of offset should not include this warning.

(8) The possibility that DOT will forward the claim to a collection agency, the General Accounting Office, the Department of Justice, or private counsel contracting with the Department of Justice for collection; however a notice of offset should not include this warning.

(c) If the debtor fails to respond to the demands for payment by the due date specified in the notice, the Department may take further action under this part or the FCCS under 4 CFR parts 101 through 105, pursuant to 31 U.S.C. 3701–3720A. These actions may include reports to commercial credit bureaus, consumer reporting agencies, contracts with commercial collection agencies, revocation of licenses, or the use of administrative offset, as authorized in 31 U.S.C. 3701–3720A.

(d) DOT may collect by administrative offset, (see §89.25, Collection by administrative offset), if the debtor:

(1) Has not made payment by the payment due date;

(2) Has not requested a review of the claim within the agency as set out in paragraph (f) of this section; or

(3) Has not made an arrangement for payment by the payment due date;

(e) Except for information that may properly be withheld under 49 CFR part 7, the debtor may inspect and copy the records of the agency related to the claim. Any reasonable costs associated with the copying and inspection of the records shall be borne by the debtor. (Payment of cost is governed by 49 CFR part 7, subpart I.) The debtor shall give reasonable notice in advance to the agency of the date on which it intends to inspect and copy the records involved;

(f)(1) Except for debts established by settlement agreement, court order or judgment, or final administrative decision, the debtor may request review of the validity or amount of a claim. To do so, the debtor shall make a request in writing for review of the claim prior to it becoming delinquent. (*See* 4 CFR 101.2 for definition of when a debt is considered delinquent.) The debtor's written response shall state the basis for the dispute, and provide all factual information, documents, citation to authority, argument and any other matters to be considered. If only part of the claim is disputed, the undisputed portion shall be paid by the delinquency date stated in the initial demand. During the period that the claim is being reviewed, the amount of the debt is owed, but the accrual of interest and accrual of time to delinquency may be suspended on the disputed portion of the debt.

(2) Review of claims shall be based upon the written record unless an oral hearing is required by 4 CFR 102.3(c). Upon completion of review, within 30 days whenever feasible, the Department shall advise the debtor whether the debt has been found to be valid in any amount, or that collection will be terminated. If the claim is found to be valid in any amount, the accrual of interest and time to delinquency shall commence 15 days after mailing of the notification of the review results. The

notification of the review may also include notice of a specific collection action to be undertaken if payment is not received.

(g) The debtor may offer to make a written agreement to pay the amount of the claim. The acceptance of such an agreement is discretionary with DOT. If the debtor requests an installment payment arrangement because a lump sum payment would create a financial hardship, DOT may agree to a written installment payment schedule with the debtor (see 4 CFR 102.11(a)). The debtor shall execute a confess-judgment note which specifies all of the terms of the arrangement and includes a provision accelerating the debt in the event the debtor defaults. The size and frequency of installment payments shall bear a reasonable relation to the size of the debt and the debtor's ability to pay. Interest shall be provided in the note (see § 89.23). The debtor shall be provided with a written explanation of the consequences of signing a confess-judgment note. The debtor shall sign a statement acknowledging receipt of the written explanation, which shall recite that the statement was read and understood before execution of the note and that the note is being signed knowingly and voluntarily. Evidence of these facts shall be maintained in DOT's file on the debtor in accordance with the practice of the DOT operating element.

§ 89.23 Interest, late payment penalties, and collection charges.

(a) DOT shall charge interest on an outstanding debt at the Treasury Current Value of Funds Rate published by the Secretary of the Treasury in accordance with 31 U.S.C. 3717 and 4 CFR 102.13(c), unless DOT determines that a higher rate is necessary to protect the interests of the United States. DOT shall charge a late payment penalty at a rate of six percent a year on any portion of a debt that is more than 90 days past due. DOT shall also assess administrative charges to cover additional cost incurred in processing and handling the debt beyond the payment due date. The imposition of interest, collection charges, and late payment penalty charges shall be made in accordance with 31 U.S.C. 3717, 4 CFR 102.13 (see § 89.3(c) regarding payment of such charges by Federal, state and local government agencies).

(b) Interest on debt shall begin to accrue on the date on which the debtor is mailed or delivered notice of the debt and the interest requirements or, in the case of advance billings, on the calendar day following the specified due date of the debt, provided the advance billing gives notice of the interest requirements for late payment. Interest on the debt shall continue to accrue until payment is received. Interest shall be calculated only on the principal of the debt (simple interest). The rate of interest assessed shall be the rate in effect on the date from which interest begins to accrue, and will remain fixed for the duration of the indebtedness. The rate of interest assessed will generally be the Treasury Current Value of Funds Rate.

(c) The Department shall waive interest on debt that is paid within 30 calendar days after the date on which interest began to accrue.

(d) Collection charges on debt shall be computed to cover the cost of processing and handling the delinquent debt. It shall be either the actual cost to process the particular delinquent debt to which it is applied, or operating elements may set the amount of such monthly charge by cost analysis establishing the average of actual additional costs incurred by the operating element in processing similar debts. Collection charges may also include the expense of obtaining credit reports and of using a professional debt collection contractor.

(e) DOT may waive interest, collection charges, or late payment penalty charges if it finds that:

(1) The debtor would be eligible for compromise under standards set forth in 4 CFR 103.2 with regard to the amount of the debt;

(2) Collection of interest, administrative charges, or penalties will jeopardize collection of the principal of the debt; or

(3) It is otherwise in the best interests of the United States, including the situation in which an offset or installment payment agreement is in effect.

§89.25 Collection by administrative offset.

(a) Whenever feasible, after a debtor fails to pay a claim, request a review of a claim, or make an arrangement for payment following a demand made in accordance with §89.21, DOT shall collect claims under this part by means of administrative offset against obligations of the United States to the debtor pursuant to 31 U.S.C. 3716 and 4 CFR 102.3. Salary offset against present or former employees of the United States is not governed by this part (see 49 CFR part 92).

(b) The Department shall notify the debtor in writing in conformance with 31 U.S.C. 3716 and the FCCS of its intent to collect the debt by offset, unless the debtor pays the debt in full, including all interest, administrative charges, and penalties, or executes an agreement to pay the debt by installment at terms acceptable to DOT.

(c) In making collection by administrative offset under 31 U.S.C. 3716, DOT must do so in accordance with the requirements set forth in §89.21(b)(1–6). (See also procedures for recovery of debts to the United States by salary offset, 49 CFR part 92.)

§89.27 Referral for litigation.

Claims that are not settled or for which collection action is not compromised, suspended or terminated under 4 CFR parts 103 and 104 or collected by collection agencies shall be referred to the General Accounting Office or the Department of Justice for litigation in accordance with the procedures in 4 CFR part 105.

§89.29 Disclosure to commercial credit bureaus and consumer reporting agencies.

(a) Data on all delinquent commercial and consumer debts may be reported to commercial credit bureaus and consumer reporting agencies (see 31 U.S.C. 3701(a)(3)). Sixty days prior to release of information to a consumer reporting agency, the debtor shall be notified, in writing, of the intent to disclose the existence of the debt to a consumer reporting agency. Such notice of intent may be by separate correspondence or included in correspondence demanding direct payment. The notice shall be in conformance with 31 U.S.C. 3711(f) and the Federal Claims Collection Standards.

(b) The information that may be disclosed is the debtor's name, address, social security number or taxpayer identification number, and any other information to establish the identity and location of the individual, the amount of the claim, status and history of the claim, and the program under which the claim arose.

§89.31 Use of professional debt collection agencies.

Debts over 90 days delinquent (see §89.21(b)(4)) may be turned over to professional debt collection agencies except for those debts owed by State and local governments, other Federal agencies, current employees, and other debts prohibited by statute from being turned over to commercial collection agencies.

§89.33 [Reserved]

Subpart C—Referral of Debts to IRS for Tax Refund Offset

SOURCE: 54 FR 28681, July 7, 1989, unless otherwise noted.

§89.37 Applicability and scope.

(a) This subpart implements 31 U.S.C. 3720A which authorizes the IRS to reduce a tax refund by the amount of a past-due legally enforceable debt owed to the United States.

(b) For purposes of this subpart, a past-due legally enforceable debt referable to the IRS is:

(1) A debt which:

(i) Is owed to the United States;

(ii) Is at least $25.00;

(iii) Except in the case of a judgment debt, has been delinquent for at least three months but has not been delinquent for more than ten years at the time the offset is made;

(iv) Cannot be currently collected pursuant to the salary offset provisions of 5 U.S.C. 5514(a)(1);

(v) Is ineligible for administrative offset under 31 U.S.C. 3716(a) by reason of 31 U.S.C. 3716(c)(2) or cannot be collected by administrative offset under 31 U.S.C. 3716(a) by the Department

against amounts payable to or on behalf of the debtor by or on behalf of the Department;

(vi) Has been disclosed by the Department to a consumer reporting agency as authorized by 31 U.S.C. 3711(f), unless a consumer reporting agency would be prohibited from using such information by 15 U.S.C. 1681c, or unless the amount of the debt does not exceed $100.00; and

(2) A debt for which the Department has:

(i) Notified or has made reasonable attempt to notify the taxpayer that the debt is past-due and, that the debt, unless repaid within 60 days thereafter, will be referred to the IRS for offset against any overpayment of tax;

(ii) Given the debtor at least 60 days from the date of notification to present information that all or part of the debt is not past-due or legally enforceable, has considered information presented by such debtor, and has determined that an amount of debt is past-due and legally enforceable;

§ 89.39 Administrative charges.

In accordance with 4 CFR 102.13, all administrative charges incurred in connection with the referral of the debt to the IRS shall be added to the debt and thus increase the amount of the offset.

§ 89.41 Notice requirement before offset.

A request for offset from an IRS tax refund will be made only after the Department has made a determination that an amount is owed and past-due and provides the debtor with 60 days written notice. The Department's notice of intention to collect by IRS tax refund offset (Notice of Intent) includes:

(a) The amount of the debt;

(b) That unless the debt is repaid within 60 days from the date of the Department's Notice of Intent, the Department will refer the debt to the IRS for offset against any amount due the debtor as a tax refund;

(c) That the debtor has a right to present information that all or part of the debt is not past-due or legally enforceable; and

(d) A mailing address for forwarding any written correspondence and a contact name and telephone number for any questions.

§ 89.43 Review within the Department.

(a) *Notification by debtor.* A debtor who receives a Notice of Intent may present, for 60 days from the date of the Notice of Intent, information that all or part of the debt is not past-due or legally enforceable. (However, this does not extend the regulatory period for submitting written statements or for requesting an administrative hearing on the merits of an alleged violation, nor does it extend the period to appeal an assessed civil penalty.) To comply with this procedure, the debtor must:

(1) Send a written request for a review of the information to the address provided in the notice.

(2) State in the request the amount disputed and the reasons why the debtor believes that the debt is not past-due or legally enforceable.

(3) Include in the request any documents which the debtor wishes to be considered or state that additional information will be submitted within the remainder of the 60 day period.

(b) *Submission of information.* The debtor may submit information showing that all or part of the debt is not past-due or not legally enforceable along with the notification required by paragraph (a) of this section. Failure to submit the information within the remainder of the 60 day period will be interpreted as there is no additional information for consideration.

(c) *Review of the information.* The Department considers all available information related to the issue of whether the debt is past-due and the issue of whether the debt is legally enforceable. After a decision has been reached, the Department notifies the debtor whether the Department has sustained amended, or cancelled its determination that the debt is past-due and legally enforceable.

§ 89.45 Department determination.

(a) Following review of the information, the Department notifies the debtor with a written decision that includes the supporting rationale.

(b) If the Department either sustains or amends its determination, it shall notify the debtor that the debt is being referred to the IRS for offset against the debtor's Federal income tax refund. If the Department determines that there is no legally enforceable debt or that full payment has been made, the case will be closed.

§89.47 Stay of offset.

If the debtor timely notifies the Department that he or she is complying with the procedures in §89.43(a) of this subpart and timely submits additional information in accordance with §89.43(b) of this subpart, the debt will not be referred to the IRS while the matter is under review by the Department. Referral will not be made until the issuance of a written decision, in accordance with §89.45 of this subpart, which sustains or amends the Department's original determination.

PART 91—INTERNATIONAL AIR TRANSPORTATION FAIR COMPETITIVE PRACTICES

Sec.

91.1 Purpose.
91.3 Investigations.
91.5 Findings and recommendations.
91.7 Determination of compensatory charges.
91.9 Distribution of compensatory funds.
91.11 Standards.
91.13 Refunds.

AUTHORITY: Secs. 2–3, 88 Stat. 2103, 49 U.S.C. 1159a and 1159b, Pub. L. 93–623.

SOURCE: 41 FR 54770, Dec. 15, 1976, unless otherwise noted.

§91.1 Purpose.

The purpose of this part is to prescribe the Secretary's role in executing his responsibilities under sections 2 and 3 of the International Air Transportation Fair Competitive Practices Act of 1974 to the end that U.S. flag air carriers operating in foreign air transportation are protected from all forms of discrimination or unfair competitive practices and are compensated for excessive or otherwise discriminatory charges levied by foreign governments or other foreign entities for the use of airport or airway property.

§91.3 Investigations.

The Assistant Secretary for Policy, Plans and International Affairs (Assistant Secretary), in coordination with the General Counsel and the Federal Aviation Administrator (Administrator), on complaint of any U.S. flag air carrier or on their own initiative, shall investigate: (a) Instances of alleged excessive or otherwise discriminatory user charges or (b) discriminatory or unfair competitive practices to which U.S. flag air carriers are subjected by a foreign government or other foreign entity. Excessive or otherwise discriminatory charges include, but are not limited to, unreasonable landing fees, unreasonable monopoly ground handling fees and unreasonable air navigation charges. Discriminatory or unfair competitive practices include, but are not limited to, unreasonably differentiated fuel allocations, cargo, charter or currency restrictions and inferior monopoly ground handling services.

§91.5 Findings and recommendations.

(a) Upon finding that a foreign government or entity imposes excessive or otherwise discriminatory charges against U.S. flag air carriers or causes such carriers to be subjected to discriminatory or unfair competitive practices, the Assistant Secretary, in coordination with the General Counsel and the Administrator, shall determine the extent of the discrimination or unfair competitive practices.

(b) Where the matter involves excessive or otherwise discriminatory charges, the Assistant Secretary shall prepare a report and recommend that the Secretary promptly submit a report of the case to the Secretary of State and the Civil Aeronautics Board in accordance with section 11 of the International Aviation Facilities Act, 49 U.S.C. 1159a.

(c) Where the matter involves discrimination or unfair competitive practices other than user charges, the Assistant Secretary shall prepare a report and recommend that the Secretary take such other action within the jurisdiction of the Department as is appropriate under the circumstances in accordance with 49 U.S.C. 1159b.

(d) If the Secretary determines, after review of the report and recommendations made under paragraph (b) of this section, that unreasonably excessive or otherwise discriminatory charges exist, the Secretary will submit a report on the matter to the Secretary of State and the Chairman of the Civil Aeronautics Board in accordance with 49 U.S.C. 1159a.

(e) If the Secretary determines, after review of the report and recommendations made under paragraph (c) of this section, that discriminatory or unfair competitive practices exist, the Secretary will commence all appropriate action within his jurisdiction in accordance with 49 U.S.C. 1159b.

§ 91.7 Determination of compensatory charges.

(a) Upon indication by the Secretary of State that the excessive or otherwise discriminatory user charges have not been reduced or eliminated, the Secretary will direct the Assistant Secretary to compute the appropriate amount of compensatory charges.

(b) Upon approving the amount of compensatory charges computed under paragraph (a) of this section, the Secretary will notify the Secretary of State and the Secretary of the Treasury of his determination.

§ 91.9 Distribution of compensatory funds.

(a) On or after January 1 and July 1 of each year, each U.S. flag air carrier which has been subjected to excessive or otherwise discriminatory charges for which compensatory charges have been collected shall, upon compliance with paragraph (c) of this section, be entitled to pro rata reimbursement for excessive or otherwise discriminatory charges incurred to date, not to exceed the amount of such charges actually paid by that carrier.

(b) The Secretary will publish in the FEDERAL REGISTER, at least 30 days before a U.S. flag air carrier becomes entitled to reimbursement, a notice setting forth the procedures to be followed in making claims for reimbursement. This notice will specify the form in which application shall be made and the specific items of proof, if any, to be submitted.

(c) On or after January 1 and July 1 of each year, each U.S. flag carrier claiming a right to reimbursement shall apply for such reimbursement in accordance with the FEDERAL REGISTER notice referred to in paragraph (b) of this section.

(d) The Assistant Secretary shall, on the basis of the application and such other data as may be available, compute the amount to which such carrier is entitled.

(e) Subject to the provisions of § 91.13(b), upon approving the computation made by the Assistant Secretary, the Secretary shall issue such certificate as will entitle each such carrier to payment from the account maintained by the Secretary of the Treasury for this purpose.

§ 91.11 Standards.

(a) To minimize the burden of implementing this part on the United States, on U.S. flag air carriers and on foreign air carriers, estimates and periodic adjustments will be used to determine the amount of discrimination and compensatory charges therefor.

(b) For the purpose of determining the amount of excessive or otherwise discriminatory charges imposed upon U.S. flag air carriers by an entity:

(1) A service or use of airport or airway property includes, but is not limited to, fueling, food service, ticketing, baggage handling, runways, ramps, parking areas, navigational aids, communications facilities or any other service necessary and incidental to the conduct of a flight.

(2) An excessive or otherwise discriminatory charge includes, but is not limited to, a charge substantially above the cost of providing a service or any charge for a service that is substantially inferior to that which the U.S. flag air carrier could have provided for itself, at the same cost, by contract or otherwise (*see also* § 91.3).

(c) In determining the amount of compensatory charge:

(1) The total amount of excessive or otherwise discriminatory charges levied against U.S. flag air carriers will be estimated in dollars.

(2) The total volume of operations to the United States by air carriers of the

nation concerned will be estimated for the succeeding six-month period.

(3) The total amount of excessive or otherwise discriminatory charges in paragraph (c)(1) of this section will be divided by the total volume of operations in paragraph (c)(2) of this section, and

(4) The quotient thus computed (which may be adjusted to reflect the type of aircraft) will constitute the compensatory charge to be collected as a condition to acceptance of the general declaration at the time of landing or takeoff of such air carriers of the nation concerned.

§91.13 Refunds.

(a) Where, in his discretion, the Secretary finds that good cause has been shown, the Secretary may authorize a refund of collected compensatory charges. For purposes of this section, good cause includes, but is not limited to, an error of fact, a miscalculation, or a determination that an original conclusion of entitlement was insufficient, invalid, erroneous or invalidated by subsequent events.

(b) Notwithstanding the provisions of §91.9(e) the Secretary may suspend for a reasonable time the issuance of a certificate of entitlement upon a showing by a payor of compensatory charges that there is a substantial likelihood that the payor will make a showing of good cause under §91.13(a).

(c) Notwithstanding the provisions of paragraphs (a) and (b) of this section, the issuance of a certificate of entitlement under §91.9(e) or the distribution to U.S. flag air carriers of funds collected under this part shall be with prejudice to any claim for refund under this section.

PART 92—RECOVERING DEBTS TO THE UNITED STATES BY SALARY OFFSET

Sec.

92.1 Purpose.
92.3 Scope.
92.5 Definitions.
92.7 Notice, hearing, written response and decision.
92.9 Exceptions to notice, hearing, written response, and final decision.
92.11 Demand for payment.
92.13 Request for hearing.
92.15 Request for hearing after time expires.
92.17 Form of hearings and written decisions.
92.19 Obtaining the services of a hearing official.
92.21 Deduction from pay.
92.23 Collection.
92.25 Source of deductions.
92.27 Duration of deductions.
92.29 Limitation on amount of deductions.
92.31 Liquidation from final payment.
92.33 Recovery from other payments due a separated employee.
92.35 Interest, penalties and administrative costs.
92.37 Non-waiver of rights by payment.
92.39 Refunds.
92.41 Requesting recovery when the Department is not the paying agency.
92.43 Requests for recovery when the Department is the paying agency.
92.45 Other debt collections.

AUTHORITY: 5 U.S.C. 5514, as amended; 5 CFR part 550, subpart K; 4 CFR parts 101–105.

SOURCE: 53 FR 4171, Feb. 12, 1988, unless otherwise noted.

§92.1 Purpose.

This part implements 5 U.S.C. 5514 (Installment Deduction for Indebtedness to the United States), as amended by the Debt Collection Act of 1982 (Pub. L. 97–365, 96 Stat. 1749, 1751). It supplements 5 CFR part 550, subpart K, and the Federal Claims Collections Standards (4 CFR parts 101–105) issued jointly by the Comptroller General of the United States and the Attorney General of the United States under 31 U.S.C. 3711(e)(2). It sets forth the procedures by which the Department of Transportation (DOT), including its operating elements (see 49 CFR 1.3):

(a) Collects debts owed to the United States by current and former DOT employees;

(b) Determines and collects interest and other charges on that indebtedness.

(c) Offsets the salary of DOT employees to collect debts owed to the United States by those employees; and,

(d) Obtains salary offset to collect debts owed to the United States by employees of other agencies under programs administered by DOT.

§92.3 Scope.

The provisions of this part are applicable to the indebtedness of a current or former employee of DOT incurred

under any program administered by DOT. The provisions of this part do not apply to the collection of indebtedness by authority other than 5 U.S.C. 5514.

§ 92.5 Definitions.

As used in this part:

(a) *Agency* means an Executive Agency as defined by section 105 of title 5, United States Code, the U.S. Postal Service, the U.S. Postal Rate Commission, a Military Department as defined by section 102 of title 5, United States Code, an agency or court in the judicial branch, an agency of the legislative branch, and any other independent establishments which are entities of the Federal Government. In DOT each operating element will act for the agency in collecting debts under this rule.

(b) *Creditor agency* means the agency to which the debt is owed.

(c) *Debt* means an amount owed to the United States from sources which include, but are not necessarily limited to, erronerous payments made to employees, overpayments of benefits, salary or other allowances, loans insured or guaranteed by the United States and all other amounts due the United States from fees, leases, rents, royalties, services, sales of real or personal property, overpayments, penalties, damages, interest, fines and forfeitures (except those arising under the Uniform Code of Military Justice) and all other similar sources. This term does not include a Government claim arising under the Internal Revenue Code of 1954 (26 U.S.C. 1–9602) as amended; the Social Security Act (42 U.S.C. 301–1397f); the tariff laws of the United States; or any case where collection of a debt by salary offset is explicitly provided for or prohibited by another statute (e.g., emergency and travel advances under 5 U.S.C. 5522, 5705 or 5724 and employee training expenses under 5 U.S.C. 4108).

(d) *Debt Claim Form* means the form used by DOT when requesting that an agency, other than DOT, assist in the recovery of funds.

(e) *Delinquent debt* means a debt which has not been paid by the date specified in the agency's initial written notification or applicable contractual agreement, unless other satisfactory payment arrangements have been made by that date, or if, at any time thereafter, the debtor fails to satisfy obligations under a payment agreement with the creditor agency.

(f) *Disposable pay* means that part of current basic pay, special pay, incentive pay, retired pay, retainer pay, or in the case of an employee not entitled to basic pay, other authorized pay remaining after the deduction of any amount required by law to be withheld. (See 5 CFR 581.105 (b) through (f) for items required by law to be withheld, and therefore excluded from disposable pay for the purposes of this regulation).

(g) *DOT operating element* (see 49 CFR 1.3) means a DOT Operating Administration including—

(1) U.S. Coast Guard.

(2) Federal Aviation Administration.

(3) Federal Highway Administration.

(4) Federal Railroad Administration.

(5) National Highway Traffic Safety Administration.

(6) Urban Mass Transportation Administration.

(7) St. Lawrence Seaway Development Corporation.

(8) Maritime Administration.

(9) Research and Special Program Administration.

(10) The Office of the Secretary.

(h) *Employee* means a current or former employee of a Federal agency, including a member of the Armed Forces (including retired members) or a Reserve of the Armed Forces (Reserves). However, employees paid from non-appropriated funds are not included.

(i) *FCCS* means the Federal Claims Collection Standards, 4 CFR Ch. II, jointly published by the Department of Justice and the General Accounting Office.

(j) *Hearing* means an informal conference before a hearing official in which the employee and the DOT operating element are given an opportunity to present evidence, witnesses, and argument. The hearing official shall be either an administrative law judge or an individual not under the supervision or control of the Department.

(k) *Paying agency* means the agency authorizing the payment of the employee's current pay.

(l) *Salary offset* means an administrative offset to collect a debt under 5 U.S.C. 5514 by deduction(s) at one or more officially established pay intervals from the current pay account of a present or former employee with or without his or her consent. It includes a single offset from the final salary of an employee whose employment ends.

(m) *Waiver* means the cancellation, remission, forgiveness or non-recovery of a debt allegedly owed by an employee to an agency as permitted or required by 5 U.S.C. 5584, 5 U.S.C. 8346(b), 10 U.S.C. 2774, or 32 U.S.C. 716, or any other law.

§92.7 Notice, hearing, written response and decision.

(a) Except as provided in §92.9 of this part, each employee from whom the department proposes to offset a debt against the Federal pay of an employee who is indebted to the United States under a program administrated by DOT under these regulations is entitled to receive a minimum of 30 days written notice as described in §92.11 of this part (see also §92.21(a)).

(b) Each employee owing a debt to the United States which will be collected by salary offset is entitled to petition for a hearing before collection starts. This petition shall be filed directly with the accounting or finance office of the DOT creditor operating element which shall make appropriate hearing arrangements consistent with law and regulations. The DOT creditor operating element shall provide an explanation of the rights of the employee. If a hearing is provided, the following issues shall be heard:

(1) The determination of the DOT creditor operating element concerning the existence and amount of the debt; and

(2) The terms of the repayment schedule, if not previously established by written agreement between the employee and the DOT creditor operating element. (See §92.21(c) regarding copy of written decision by hearing officer describing method and amount of salary offset).

§92.9 Exceptions to notice, hearing, written response, and final decision.

(a) *Exceptions.* The procedural requirements of 5 U.S.C. 5514 do not apply to recovery by way of retroactive deductions for administrative adjustments associated with the Federal benefits program. In such cases the content of the notification to employees is stated in §92.9(b).

(b) *Simplified procedures to be followed.* In the event that a retroactive deduction from pay or allowances is required to recover an insufficiency of deductions arising through normal processing delays, and those insufficient deductions did not occur in more than four pay periods, rather than following the specific procedures required by 5 U.S.C. 5514(a)(2), and set forth in §92.11 through §92.17 of this part, the DOT creditor operating element shall issue in advance of the collection a simplified notice to the employee that:

(1) Because of the employee's election for changes in voluntary payroll deduction, corresponding deductions shall be imposed on the employee's salary to cover the period between the effective date of the election and the first regular withholding. The employee may dispute the amount of the retroactive collection by notifying his or her accounting or finance officer; or

(2) Due to a normal ministerial adjustment in pay or allowances which could not be placed into effect immediately, future pay will be reduced to permit the DOT creditor operating element to recover any excess pay or allowances received by the employee. The employee may dispute the amount of the retroactive collection by notifying his or her accounting or finance officer.

(c) *Limitation on exceptions.* The exceptions described in paragraph (a) of this section shall not include a recovery required to be made for any reason other than routine processing delays in putting the change into effect, even if the period of time for which the amounts must be retroactively recovered is less than four pay periods. If normal processing delays exceed four pay periods, then the full procedures prescribed under 5 U.S.C. 5514 and

§§ 92.11 through 92.17 of this part will be extended to the employee.

[53 FR 4171, Feb. 12, 1988, as amended at 53 FR 51279, Dec. 21, 1988]

§ 92.11 Demand for payment.

(a) The DOT creditor operating element shall send a debtor a total of three progressively stronger written demands at not more than 30-day intervals, unless a response to the first or second demand indicates that a further demand would be futile and the debtor's response does not require rebuttal (see also § 92.21(a)). Other information may also indicate that additional written demands are unnecessary.

(b) The initial written demand for payment shall inform the debtor of:

(1) The basis for the indebtedness;

(2) The amount of the claim;

(3) The date by which payment is to be made:

(4) The debtor's liability for interest, penalties and administrative charges in accordance with 31 U.S.C. 3717 and § 92.35 of this part, if payment is not received within 30 days of the due date (see § 92.35 for details regarding interest, penalties and administrative costs);

(5) The intent of the agency to collect by salary offset, including asking the assistance of other Federal agencies to help in the offset whenever possible, if the debtor:

(i) Has not made payment by the payment due date;

(ii) Has not requested a review of the claim within the agency as set out in paragraph (b)(8) of this section; or

(iii) Has not made an arrangement for payment by the payment due date:

(6) The possible submission of claims to a collection agency or referral to the General Accounting Office or the Department of Justice for litigation in accordance with the procedures in 4 CFR part 105.

(7) The right of the debtor to inspect and copy the records of the agency related to the claim. Any reasonable costs associated with the inspection and copying of these records shall be borne by the debtor. The debtor shall give reasonable notice in advance to the agency of the date upon which he or she intends to inspect and copy the records involved.

(8) The right of the debtor to a review of the claim within the agency. If the claim is disputed in full or in part, the debtor shall respond to the demand by making a request in writing for a review of the claim within the agency by the payment due date stated in the demand. The debtor's written response shall state the basis for the dispute. If only part of the claim is disputed, the undisputed portion shall be paid by the due date. The DOT creditor operating element shall acknowledge receipt of the request for a review, and upon completion of consideration shall notify the debtor whether its determination has been sustained, amended, or canceled within 15 days of the receipt of the request for a review. If the DOT operating element either sustains or amends its determination, it shall notify the debtor of its intent to collect by salary offset unless payment is received within 15 days of the mailing of the notification of its decision following a review of the claim.

(9) The right of the debtor to offer to make a written agreement to repay the amount of the claim (see § 92.23). The acceptance of such an agreement is discretionary with the agency. If the debtor requests a repayment arrangement because a payment of the amount due would create a financial hardship, the DOT creditor operating element will analyze the debtor's financial condition. Depending on its evaluation of the financial strength of the debtor, the DOT operating element may agree to a written installment repayment schedule with the debtor. The debtor shall execute a confession of judgment note which specifies all of the terms of the arrangement. The size and frequency of installment payments should bear a reasonable relation to the size of the debt and the debtor's ability to pay. Interest, penalties and administrative charges shall be provided in the note (see § 92.35). The debtor shall be provided with a written explanation of the consequences of signing a confession of judgment note. The debtor shall sign a statement acknowledging receipt of the written explanation which shall recite that the statement was read and understood before execution of the note and that the note is being signed knowingly and voluntarily.

Some form of evidence of these facts shall be maintained in the agency's file on the debtor.

(10) The right to an oral hearing or a hearing based on written submissions conducted by an administrative law judge or by a hearing official not under the control of the head of the Department in accordance with §92.13 of this part.

(11) The consequences of any knowingly false statements, representations, or evidence provided by the employee, which may include:

(i) Disciplinary procedures under 5 U.S.C. chapter 75, 5 CFR part 752, or any other applicable statutes or regulations;

(ii) Criminal penalties under 18 U.S.C. 286, 287, 1001 and 1002, or any other applicable statute; or,

(iii) Penalties under the False Claims Act, 31 U.S.C. 3729, *et seq.*, or any other applicable statute.

(12) Proceedings under any other statutory authority for the collection of claims of the DOT operating element.

(13) The fact that amounts paid on or deducted from the debt which are later waived or found not owed to the United States will be promptly refunded to the employee unless there are applicable contractual or statutory provisions to the contrary.

(14) The name, address, and telephone number of the accounting or finance officer who may be contacted if the employee wishes to review the records or to obtain information.

§92.13 Request for hearing.

(a) The employee shall be advised in the notification that a hearing may be requested by filing a written petition within 15 calendar days of receipt of the notification, addressed to the chief of the paying agency's accounting or finance office.

(b) The petition shall state the grounds upon which the employee disputes the proposed collection of the alleged debt. The petition shall identify and explain with reasonable specificity the facts, evidence which, and witnesses who the employee believes support his or her position.

(c) The timely filing of a petition for hearing shall stay any further collection proceedings. A decision by the administrative law judge or other hearing official (see §92.5(j)) will be issued at the earliest practical date, but no later than 60 days after the filing of a petition for hearing, unless a delay is granted at the request of the employee.

§92.15 Request for hearing after time expires.

The Department may accept late requests for a hearing if the employee can show that delay in requesting a hearing beyond the period provided in the notice described in §92.11 of this part was caused by circumstances beyond his or her control or because of failure to receive notice of the time limit (unless he or she was otherwise aware of it) or because of new information.

§92.17 Form of hearings and written decisions.

(a) Hearings shall consist of informal conferences before an administrative law judge or other hearing official (see §92.5(j)) in which the employee and the DOT creditor operating element are given full opportunity to present evidence, witnesses, and argument. The DOT operating element will maintain a summary record of a hearing provided under these procedures.

(b) Written decisions provided after a request for hearing shall, at a minimum, summarize the evidence alleged to substantiate the nature and origin of the alleged debt; the administrative law judge's or other hearing official's analysis, findings, and conclusions; the amount and validity of the alleged debt; and, where applicable, the repayment schedule.

(c) A copy of the administrative law judge's or other hearing official's final decision shall be provided to the employee as well as the chief of the office authorized to collect debts by deduction from salary.

(d) The decision of the administrative law judge or other hearing official shall be final and binding on the parties.

§ 92.19 Obtaining the services of a hearing official.

(a) Where a DOT operating element is the creditor agency, the chief of the appropriate accounting or finance office shall schedule a hearing before an administrative law judge or other hearing official.

(b) If another (non-DOT) agency is the creditor agency, then it is the responsibility of that agency to arrange for a hearing if one is requested.

(c) Agents for the paying agency are designated in appendix A to 5 CFR part 581. (This appendix lists the agents designated to accept legal process for the executive branch, the U.S. Postal Service, the Postal Rate Commission, the District of Columbia, American Samoa, Guam, the Virgin Islands, and the Smithsonian Institution.)

§ 92.21 Deduction from pay.

(a) After other, less severe collection actions have failed, the DOT operating element (see § 92.5(g)) may implement steps to obtain collection by salary offset. The method and the amount of the salary offset shall be the method and amount stated in the creditor agency's demand letter (see § 92.11) or notice (see § 92.7), or, if applicable, in the decision of an administrative law judge or other hearing official after an employee-requested hearing on the matter. If a DOT operating element is the creditor, the procedures stated in § 92.11 shall be followed.

(b) Before a collection by salary offset may be made, the chief of the accounting or finance office of the paying DOT operating element shall be furnished with certified documentation by the creditor agency indicating that the creditor agency has sent the employee a demand letter pursuant to § 92.11 of this part stating as a minimum:

(1) The nature and amount of the indebtedness and the intention of the agency to initiate, at the expiration of thirty days, a proceeding to collect the debt by salary offset; and an explanation of the rights of the employee under this subsection;

(2) That the employee has the opportunity to inspect and copy Government records relating to the debt;

(3) That the employee has an opportunity to enter into a written agreement with the agency to establish a schedule for the repayment of the debt;

(4) That the employee has an opportunity for a hearing on the determination of the agency concerning the existence or the amount of the debt, and in the case of an individual whose repayment schedule is established other than by a written agreement as described in paragraph (b)(3) of this section concerning the terms of the repayment schedule; and

(5) That the creditor agency's regulations implementing 5 U.S.C. 5514 have been approved by OPM (see 5 CFR 550.1108(a)).

(c) Where a hearing has been held, a copy of the decision of the administrative law judge or other hearing official must be furnished to the chief of the accounting or finance office of the paying DOT operating element before collection of the indebtedness by salary offset may be initiated. The method and amount of the offset will be as stated in the decision.

§ 92.23 Collection.

(a) A debt shall be collected in a lump sum or by installment deductions at officially established pay intervals from an employee's current pay account, unless the employee and the DOT operating element agree to alternative arrangements for payment (see § 92.11(b)(9) describing such voluntary repayment arrangements). The alternative arrangement shall be in writing, signed by both the employee and the chief of the appropriate accounting or finance office, and shall be documented in the DOT operating element's files.

(b) Under 31 U.S.C. 3716 and 4 CFR 102.3(b)(3), agencies may not initiate offset to collect a debt more than 10 years after the Government's right to collect the debt accrued, unless facts material to the Government's rights to collect the debt were not known by the DOT operating element's official or officials charged with the responsibility to discover and collect the debt.

§ 92.25 Source of deductions.

Except as provided in § 92.31 and § 92.33 of this part (with respect to separated employees), the paying DOT operating element will make deductions only from disposable pay (see § 92.5(f)).

§92.27 Duration of deductions.

Debts shall be collected in one lump sum where possible. However, if the employee is financially unable to pay in one lump sum or the amount of the debt exceeds 15 percent of disposable pay payable in one pay period, collection will be made in installments. Such installment deductions will be made over a period not greater than the anticipated period of employment or active duty, as the case may be, except as provided in §§92.29, 92.31, and 92.33 of this part.

§92.29 Limitation on amount of deductions.

The size and frequency of installment deductions shall bear a reasonable relation to the size of the debt and the employee's ability to pay. However, the amount deducted for any period may not exceed 15 percent of the disposable pay from which the deduction is made, unless the employee has agreed in writing to the deduction of a greater amount.

§92.31 Liquidation from final payment.

If the employee retires, resigns his or her employment, is terminated, or the employment or period of active duty ends before collection of the debt is completed, there shall be an offset from subsequent payments of any nature (e.g., final salary, lump sum leave, etc.) due the employee from the DOT operating element on the date of separation to the extent necessary to liquidate the debt.

§92.33 Recovery from other payments due a separated employee.

If the debt cannot be liquidated by offset from any final payment due the employee as of the date of separation, the DOT operating element shall liquidate the debt by administrative offset pursuant to 31 U.S.C. 3716 from later payments of any kind due the former employee from the United States, where appropriate (see §92.41(b)(2)(ii)).

§92.35 Interest, penalties and administrative costs.

(a) Where a DOT creditor operating element (see §92.5(g)) is the creditor, it shall charge interest on an outstanding debt at the rate published by the Secretary of the Treasury in accordance with 31 U.S.C. 3717. The rate of interest assessed shall be the rate of the current value of funds to the United States Treasury (i.e., the Treasury tax and loan account rate), as prescribed and published by the Secretary of the Treasury in the FEDERAL REGISTER and the Treasury Financial Manual Bulletins annually or quarterly, in accordance with 31 U.S.C. 3717. The DOT creditor operating element shall charge a penalty of six percent a year, in addition to interest, on any portion of a debt that is more than 90 days past due. It shall assess administrative charges to cover additional costs incurred in processing and handling the debt beyond the payment due date. The imposition of interest, penalties and administrative charges is made in accordance with 31 U.S.C. 3717 and 4 CFR 102.13.

(b) Interest on debt shall begin to accrue on the date on which the debtor is first sent or delivered notice of the debt and of the interest requirements or, in the case of advance billings, on the calendar date following the specified due date of the debt provided the advance billing gives notice of the interest requirements for late payment. Interest on the debt shall continue to accrue until payment is received. Interest shall be calculated only on the principal of the debt (simple interest). The rate of interest charged shall be the rate in effect on the date from which interest begins to accrue, and shall remain fixed for the duration of the indebtedness.

(c) A DOT creditor operating element shall waive the monthly interest on debt that is paid within 30 calendar days after the date on which interest began to accrue.

(d) A DOT creditor operating element may waive interest, penalties and/or administrative charges if it finds that:

(1) The debtor is unable to pay any significant sum toward the claim within a reasonable period of time;

(2) Collection of interest, penalties or administrative charges will jeopardize collection of the principal of the debt; or

(3) It is otherwise in the best interest of the United States, including the situation where an offset or installment payment agreement is in effect.

§ 92.37 Non-waiver of rights by payment.

An employee's payment or agreement to pay, whether voluntary or involuntary, of all or any portion of an alleged debt being collected pursuant to these procedures shall not be construed as a waiver of any rights which the employee may have under this part to the extent of such payment or agreement.

§ 92.39 Refunds.

(a) Amounts paid or deducted from the account of a current or former employee of the United States Government, pursuant to this part, for a debt which is found not owing to the United States shall be promptly refunded to the employee.

(b) Amounts which are waived shall, after proper application, be promptly returned after approval of the application.

§ 92.41 Requesting recovery when the Department is not the paying agency.

(a) *Format of the request for recovery*. (1) Where the DOT operating element is the creditor agency and another agency is the paying agency, the chief of the accounting of finance office of the appropriate DOT operating element (see § 92.5(g)) shall complete and certify the ''Debt Claim Form'' (see Attachment 1), and attach a copy of the demand letter sent to the employee pursuant to § 92.11 with a statement of the employee's response thereto, or, if a hearing was held pursuant to § 92.13, attach a copy of the decision of the administrative law judge or other hearing official. The DOT creditor operating element shall certify that the employee owes the debt, the amount and basis of the debt, the date on which payment is due, the date the Government's right to collect the debt accrued, and that the Departmental regulations implementing 5 U.S.C. 5514 have been approved by the Office of Personnel Management.

(2) If the collection is to be made in voluntary or involuntary installments (see Attachment 1), the DOT creditor operating element shall also advise the paying agency of the amount of the installments and, if a date for the beginning of payments other than the next officially established pay period is required, the date of the first installment.

(3) Unless the employee has voluntarily agreed to the salary offset in writing or, in the absence of such agreement, has signed a statement acknowledging receipt of the procedures required by 5 U.S.C. 5514(a)(2) and the writing or statement is attached to the debt claim form, the DOT creditor operating element shall also indicate the action(s) taken under 5 U.S.C. 5514 and give the date(s) the action(s) were taken.

(b) *Submitting the request for recovery*—(1) *Current employees.* The DOT creditor operating element shall submit the ''Debt Claim Form'' (Attachment 1) to the employee's paying agency.

(2) *Employees who are separating or have separated* —(i) *Employees who are in the processs of separating.* If the employee is in the process of separating, the DOT creditor operating element shall submit its debt claim (Attachment 1) to the employee's paying agency for collection as provided in § 92.31 of this part. The paying agency is required to certify the total amount of its collection made or to be made prior to separation and notify the DOT creditor operating element and the employee as provided in § 92.41 (b)(2)(iii). If the paying agency is aware that the employee is entitled to payments from the Civil Service Retirement and Disability Fund, or other similar payments, it shall advise the DOT operating element and send a copy of the debt claim and certification to the agency responsible for making such payments as notice that a debt is outstanding.

(ii) *Employees who have already separated.* If the employee has already separated and all payments due from his or her former paying agency have been paid, the DOT operating element may request, unless otherwise prohibited for example by court order, that monies

which are due and payable to the employee from the Civil Service Retirement and Disability Fund (5 CFR 831.1801 et seq.) or other similar funds, be administratively offset in order to collect the debt (see 31 U.S.C. 3716 and the FCCS).

(iii) *Employees who transfer from one paying agency to another.* If, after the DOT creditor operating element has submitted the debt claim to the employee's paying agency, the employee transfers to a position served by a different paying agency before the debt is collected in full, the paying agency from which the employee separates shall certify the total amount of the collection made on the debt. One copy of the certification shall be furnished to the employee and another to the DOT operating element along with notice of the employee's transfer. The original of the debt claim form shall be inserted in the employee's official personnel folder along with a copy of the certification of the amount which has been collected. Upon receiving the official personnel folder, the new paying agency shall, in accordnce with the DOT operating element's properly certified claim, resume the collection from the employee's current pay account and notify the employee and the DOT creditor operating element of the resumption. The DOT operating element is not required to repeat the required collection procedures from the beginning in order to resume the collection. However, it shall be the responsibility of the DOT creditor operating element to review the debt upon receiving the former paying agency's notice of the employee's transfer to make sure the collection is resumed by the new paying agency.

§92.43 Requests for recovery when the Department is the paying agency.

(a) *Incomplete request for recovery.* If the request for recovery received by the chief of the accounting or finance office of the appropriate DOT operating element is incomplete in any respect (see §92.21(b)) including, but not limited to, the failure to certify in writing that the employee owes the debt, the amount and basis of the debt, the date on which payment(s) is due, the date the creditor agency's right to collect the debt first accrued, and that the creditor agency's regulations implementing 5 U.S.C. 5514 were approved by OPM, the request shall be returned to the creditor agency with a statement of the deficiency. No action to implement salary offset may be initiated until a complete request has been received.

(b) *Complete request for recovery.* If a complete request for recovery is received by the chief of the accounting or finance office of the appropriate DOT operating element, a copy of the request and any supporting documentation shall be transmitted to the appropriate payroll office, and deductions shall be scheduled to begin at the next officially established pay interval. A copy of the request and any supporting documentation shall be provided to the debtor, along with a notice of the date deductions will begin.

(c) The DOT operating element may not review the merits of the creditor agency's determination with respect to the amount or validity of the debt as stated in the request for recovery.

§92.45 Other debt collections.

Separate rules exist for general collection of debts owed the United States under 31 U.S.C. 3711, 3716–18; 4 CFR Ch. II.

Attachment 1

DEBT CLAIM FORM

1. Paying agency identification	2. Employee identification
a. Name	a. Name
b. Address	b. Address
	c. DOB d. SSN

To liquidate a debt to the United States, the named creditor agency asks that the debt be collected as shown from the current pay of the employee identified above. Notices and inquiries concerning the debt should be sent to the address shown below.

3. Debt information

a. Reason for debt:		
b. Date right to collect accrued	c. Debt identification number, if any	
d. Original debt: amount $	e. Number of installments @	Amount $
f. Interest due (if none, show N/A $		$
g. Penalty due (if none, show N/A $		$
h. Administrative cost (if none, show N/A $		$
i. Total collection to be made $	j. Commence deductions on (date)	

4. Due process: / / date actions taken: or attach / / acknowledgement / / consent

Creditor agency 30-day salary offset notice	Hearing held	
Employee did not respond (consent assumed)	Decision for creditor agency	
Employee requested a hearing	Other -	

I certify the following: (1) the debt identified above is properly due the United States from the named employee in the amount shown; (2) this agency's regulations implementing 5 U.S.C. 5514 have been approved by the Office of Personnel Management, and (3) the information concerning this agency's and the employee's actions is correct as stated.

5. Creditor agency information

a. Name	b. Appropriation/fund (title/symbol #)
c. Address	d. Disbursing officer (name/symbol #)
e. Signature of certifying official	f. Date
g. Title	h. Telephone number

PART 93—AIRCRAFT ALLOCATION

Sec.
93.1 Issuance of aircraft allocations.
93.3 Reporting requirements.

AUTHORITY: Sec. 9, 80 Stat. 944; 49 U.S.C. 1657.

§93.1 Issuance of aircraft allocations.

From time to time, the Director, Office of Emergency Transportation, issues planning orders allocating aircraft to the Department of Defense, identified by FAA registration number, for the Civil Reserve Air Fleet Program, or as a reserve fleet for use in certain contingencies in the Civil Reserve Air Fleet Program of the Department of Defense. The current listing of aircraft allocations may be obtained upon request from the Director, Office of Emergency Transportation, Department of Transportation, Washington, DC 20590.

[32 FR 20778, Dec. 23, 1967, as amended by Amdt. 93–1, 33 FR 7821, May 29, 1968]

§93.3 Reporting requirements.

In the event any aircraft identified in the allocations in effect:

(a) Is destroyed or suffers major damage the owner or operator, or both, shall give immediate notice thereof to the Director, Office of Emergency Transportation; or

(b) Is sold, leased, or otherwise transferred, the transferor or owner, or both, shall give immediate notice thereof to the Director, Office of Emergency Transportation, together with full information concerning the identity of the transferee, the date and place of transfer, and the terms and conditions of the transfer.

[32 FR 20778, Dec. 23, 1967]

PART 95—ADVISORY COMMITTEES

Sec.
95.1 Applicability.
95.3 Definitions.
95.5 Use of advisory committees generally.
95.7 Industry advisory committees: Membership.
95.9 Meetings; other than industry advisory committees.
95.11 Meetings; industry advisory committees.
95.13 Antitrust laws.
95.15 Conflicts of interest statutes, orders, and regulations.

AUTHORITY: Sec. 9, 80 Stat. 944 (49 U.S.C. 1657); E.O. 11007, 3 CFR, 1959–1963 Comp., p. 573.

SOURCE: 33 FR 467, Jan. 12, 1968, unless otherwise noted.

§95.1 Applicability.

(a) This part prescribes uniform regulations governing the formation and use of advisory committees by the Office of the Secretary of Transportation, the U.S. Coast Guard, the Federal Aviation Administration, the Federal Highway Administration, the Federal Railroad Administration, the Urban Mass Transportation Administration, the National Highway Traffic Safety Administration, and the St. Lawrence Seaway Development Corporation. It does not apply to the National Transportation Safety Board.

(b) This part applies to advisory committees formed or used by the organizations named in paragraph (a) of this section. It also applies to those organizations whenever they affiliate with, participate in, or use similar advisory committees formed or used by other departments or agencies of the Executive Branch of the Government, unless specifically exempted under paragraph (c) of this section. Advisory committees whose membership includes ''consultants and advisers'' are subject to this part regardless of whether those members are considered to be Government employees on the days they attend committee meetings.

(c) This part does not apply to:

(1) Any advisory committee the purpose, composition, and operation of which is specified by statute, unless and to the extent that statute authorizes the President to prescribe regulations for the committee's formation and use.

(2) Any advisory committee composed wholly of representatives of State or local agencies or of charitable, religious, educational, civic, social welfare, or similar nonprofit organizations.

(3) Any local, regional, or national committee whose only function is to disseminate information for public agencies, or any local civil committee whose primary function is to perform a

public service, other than giving advice or making recommendations to the Government.

[33 FR 467, Jan. 12, 1968, as amended by Amdt. 95–2, 35 FR 5331, Mar. 31, 1970; Amdt. 95–3, 36 FR 431, Jan. 13, 1971]

§ 95.3 Definitions.

For the purposes of this part:

(a) *Advisory committee* includes any committee, board, commission, council, conference, panel, task force, or other similar group, or any subcommittee, or other subgroup thereof, which is formed within the Department in the interest of obtaining advice or recommendations, or for any other purpose, and which is not composed wholly of officers or employees of the Government. It also includes any committee, board, commission, council, conference, panel, task force, or other similar group, or any subcommittee or subgroup thereof, which is not formed within the Department, but only during the period it is being used by the Department in the same manner as a Government-formed advisory committee.

(b) *Industry advisory committee* includes any advisory committee composed predominately of members or representatives of a single industry or group of related industries, or any subdivision of a single industry, made on a geographic, service, or product basis.

(c) *Department* means Department of Transportation.

(d) *Secretary* means the Secretary of Transportation.

§ 95.5 Use of advisory committees generally.

(a) Advisory committees are formed to provide a means of obtaining advice, views, and recommendations of benefit to the operations of the Government from industrialists, businessmen, scientists, engineers, educators, and other public and private citizens whose experience and talents would not otherwise be available to the Department. An advisory committee may be used when its counsel is desired on matters under consideration by any part of the Department. Unless specifically authorized by law to the contrary, no advisory committee may be used for functions which are not solely advisory. Determinations of action to be taken with respect to matters upon which an advisory committee advises or recommends may be made only by a full-time, salaried officer or employee of the Government.

(b) An advisory committee may be established to serve the Department as a whole, the Office of the Secretary, any operating administration, any combination of the Office of the Secretary and the operating administrations, or the operating administrations collectively. However, no advisory committee may be formed or used unless (1) the committee is specifically authorized by law, or (2) the committee is specifically approved, in writing, by the Secretary or his designee, to be in the public interest in connection with the performance of duties imposed on the Department or any part of it.

§ 95.7 Industry advisory committees: Membership.

Each industry advisory committee must be reasonably representative of the group of industries, the single industry, or the product segment thereof to which it relates, taking into account the size and function of business enterprises in the industry or industries and their location, affiliation, and competitive status among other factors. Selection of industry members shall, unless otherwise provided by statute, be limited to persons actively engaged in operations in the particular industry, industries, or segments concerned, except in cases in which the Secretary or his designee considers that such a limitation would interfere with effective committee operations.

§ 95.9 Meetings; other than industry advisory committees.

(a) Meetings of an advisory committee, other than an industry advisory committee, may be held only at the call, or with the advance approval, of a full-time, salaried officer or employee of the Department, with an agenda formulated or approved by that officer or employee.

(b) Each meeting shall be chaired by, or be conducted in the presence of, a full-time, salaried officer or employee of the Government who is required to

adjourn the meeting whenever he considers it to be in the public interest.

(c) Minutes shall be kept of each meeting. As a minimum, the minutes must contain a record of the persons present, a description of the matter discussed and conclusions reached, and a copy of any report received, issued, or approved by the committee. The accuracy of all minutes must be certified by a full-time, salaried officer or employee of the Government who was present during the meeting to which the minutes pertain.

(d) The Secretary or his designee may waive any requirement of this section in any case in which he determines that:

(1) Compliance with that requirement would interfere with the proper functioning of the committee or would be impracticable;

(2) Adequate provisions are made to assure otherwise that the operation of the committee is subject to Government control and purpose; and

(3) The waiver is in the public interest.

§95.11 Meetings; industry advisory committees.

(a) Meetings of an industry advisory committee may be held only at the call of a full-time, salaried officer or employee of the Department, with an agenda formulated by that officer or employee.

(b) Each meeting shall be chaired by a full-time, salaried officer or employee of the Government who is required to adjourn the meeting whenever he considers it to be in the public interest. The Secretary or his designee may waive the requirements of this paragraph in any case in which he determines that:

(1) Compliance with that requirement would interfere with the proper functioning of the committee or would be impracticable;

(2) Adequate provisions are made to assure otherwise that the operation of the committee is subject to Government control and purpose;

(3) The waiver is in the public interest; and

(4) The meeting will be conducted in the presence of a full-time, salaried officer or employee of the Government who is required to adjourn the meeting whenever he considers it to be in the public interest.

(c) A verbatim transcript shall be kept of the proceedings at each meeting, including the name of each person present, his affiliation, and the capacity in which he attended, except in any case in which the Secretary or his designee determines that a verbatim transcript would interfere with the proper functioning of the committee or would be impracticable and therefore waives the requirement as being in the public interest. In such a case the procedure prescribed in §95.9(c) applies.

(d) No industry advisory committee may receive, compile, or discuss data or reports showing the current or projected commercial operations of any identified business enterprise.

[33 FR 467, Jan. 12, 1968, as amended by Amdt. 95–1, 33 FR 6913, May 3, 1968]

§95.13 Antitrust laws.

The activities of advisory committees are subject to the antitrust laws and committee members are not immune from prosecution under those laws. The Department of Justice takes the position that it retains complete freedom to institute proceedings, either civil or criminal, or both, in the event that any particular plan or course of action is used to accomplish unlawful private ends, and to institute civil actions to enjoin continuance of any act or practices found not to be in the public interest and persisted in after notice to desist. This part is intended to minimize the possibility of violating the antitrust laws. Industry representatives and Government personnel officially connected with advisory committees should be advised of the antitrust aspects of the committee activity.

§95.15 Conflicts of interest statutes, orders, and regulations.

There is a body of statutes, orders, and regulations prescribed by the President, the Secretary, and other authorities, dealing with conflicts of interest and designed to prevent any conflict between the official duties and

status of Government officers and employees and their private interest. Government officers and employees are required to comply with all applicable laws, orders, and regulations. Part 99 of this chapter sets forth a comprehensive list of the conflicts of interest statutes and guidelines for the employees of the Department to follow in the application of these statutes to part-time advisers and consultants to the Government. Any officer or employee appointed to serve on an advisory committee who has any doubt or question respecting a possible conflict of interest shall seek specific legal advice on his individual situation.

PART 98—ENFORCEMENT OF RESTRICTIONS ON POST–EMPLOYMENT ACTIVITIES

Subpart A—Administration of Enforcement Proceedings

Sec.
98.1 Purpose.
98.2 Definitions.
98.3 Reports of apparent violations.
98.4 Initiation of administrative disciplinary proceeding.
98.5 Former employee response to notice.
98.6 Examiner.
98.7 Hearing.
98.8 Decision by examiner.
98.9 Decision if hearing waived.
98.10 Appeal.
98.11 Final administrative decision.

Subpart B—Administrative Sanctions

98.12 Administrative sanctions.

Subpart C—Judicial Review

98.13 Judicial review.

AUTHORITY: 18 U.S.C. 207; Pub. L. 96–28.

SOURCE: 48 FR 12383, Mar. 24, 1983, unless otherwise noted.

Subpart A—Administration of Enforcement Proceedings

§ 98.1 Purpose.

The purpose of this part is to set forth the administrative enforcement procedures that the Department of Transportation will follow when there is an allegation that a former employee of the Department has violated 18 U.S.C. 207.

§ 98.2 Definitions.

For the purposes of this part, the following definitions apply:

(a) *Administration* means each of the following:

(1) The United States Coast Guard.

(2) The Federal Aviation Administration.

(3) The Federal Highway Administration.

(4) The Federal Railroad Administration.

(5) The National Highway Traffic Safety Administration.

(6) The Urban Mass Transportation Administration.

(7) The Saint Lawrence Seaway Development Corporation.

(8) The Research and Special Programs Administration.

(9) The Maritime Administration.

(b) *Department* means the Department of Transportation.

(c) *18 U.S.C. 207* means 18 U.S.C. 207 (a), (b), or (c) or any regulations issued under 18 U.S.C. 207.

(d) *Secretary* means the Secretary of Transportation.

§ 98.3 Reports of apparent violations.

Any person may report, to the Assistant General Counsel for Environmental, Civil Rights and General Law, an apparent violation by a former employee of the Department of 18 U.S.C. 207.

§ 98.4 Initiation of administrative disciplinary proceeding.

(a) Whenever the Assistant General Counsel for Environmental, Civil Rights and General Law has determined that there is reasonable cause to believe that a former Departmental employee has violated 18 U.S.C. 207, the Assistant General Counsel for Environmental, Civil Rights, and General Law:

(1) Shall expeditiously provide that information to the Director, Office of Government Ethics, and to the Criminal Division, Department of Justice; and

(2) After coordinating any proceeding with the Criminal Division, Department of Justice, to avoid prejudicing criminal proceedings, may institute an administrative disciplinary proceeding in accordance with this part.

(b) The person who shall provide for the prosecution of the alleged violation in an administrative disciplinary proceeding under this part (hereinafter referred to as the ''Departmental counsel'') is:

(1) In a case where the last Departmental employer of the alleged violator is the Office of the Secretary, the Assistant General Counsel for Environmental, Civil Rights and General Law, or his or her designee; or

(2) In a case where the last Departmental employer of the alleged violator is an administration, the Chief Counsel, or his or her designee, for that administration.

(c) Before beginning an administrative disciplinary proceeding, the Departmental counsel shall provide the former employee with actual notice of the institution of a proceeding. This notice must include:

(1) A statement of allegations and the basis for those allegations, which statement must be sufficiently detailed to enable the former employee to prepare an adequate defense;

(2) Notification of the right to a hearing;

(3) An explanation of the method by which a hearing may be requested; and

(4) A statement of the possible sanctions that may be imposed if a violation by the former employee is found to have occurred.

§98.5 Former employee response to notice.

(a) Within 30 working days after service of a notice pursuant to §98.4(c), the former employee may submit to the Departmental counsel in writing:

(1) A request for a hearing, which, if not all issues are disputed by the former employee, should specify those issues that are;

(2) Any evidence and arguments in lieu of a hearing or

(3) A statement that the allegations are true and set forth any factors that should be considered in determining the administrative sanction to be imposed.

(b) The Department shall deem the right to a hearing to have been waived by the former employee if the former employee does not submit a request under paragraph (b)(1) of this section within 30 working days after service of notice pursuant to §98.4(c).

§98.6 Examiner.

(a) The presiding official at a hearing held under this part and the deciding official under §98.9 of this part (hereinafter referred to as the ''examiner'') shall be designated by the Secretary.

(b) The examiner shall not have been involved in any of the events specified in the allegations, shall not have been involved in the investigation of the allegations and the institution of the proceedings under this part, and shall not be or have been employed by the administration, or the Office of the Secretary if applicable, in which the alleged violation occurred.

§98.7 Hearing.

(a) The examiner shall, within 30 working days of a request for a hearing under §98.5(b), schedule the hearing for a reasonable time, date, and place. The examiner shall grant any delays or continuances that the examiner determines to be necessary and appropriate for fair resolution of the case, with due regard to the former employee's need for adequate time to prepare a defense and for expeditious resolution of allegations that may be damaging to that former employee's reputation.

(b) The following rights shall be granted to a former employee who requests a hearing under §98.5(b):

(1) To represent oneself or to be represented by counsel.

(2) To introduce and examine witnesses and to submit physical evidence.

(3) To confront and cross-examine adverse witnesses.

(4) To present oral argument.

(5) To obtain a transcript or recording of the hearing on request from the official reporter upon payment of the fees fixed therefor.

(c) In a hearing under this part, the Federal Rules of Civil Procedure and Evidence do not apply. However, the examiner may make such orders and determinations regarding discovery, admissibility of evidence, conduct of examination and cross-examination, and similar matters the examiner deems necessary or appropriate to ensure orderliness in the proceedings and fundamental fairness to the parties.

§ 98.8 Decision by examiner.

(a) In a hearing under § 98.7 of this part, the Departmental counsel must establish a violation by a preponderance of the evidence.

(b) The examiner shall make a decision exclusively on matters of record in the proceeding and shall set forth in the decision:

(1) All findings of fact relevant to the matters at issue;

(2) All conclusions of law relevant to the matters at issue; and

(3) The sanction to be imposed, if any.

§ 98.9 Decision if hearing waived.

(a) If the former employee waives or, in accordance wth § 98.5(b) of this part, is deemed to have waived a hearing under this part, the examiner shall, after review of the record as it exists, make a decision as to whether the former employee is in violation of 18 U.S.C. 207.

(b) In a decision under paragraph (a) of this section, the requirements of § 98.8 of this part apply.

§ 98.10 Appeal.

(a) Within 30 working days after receipt of a decision issued under § 98.8 or § 98.9 of this part, either the Departmental counsel or the former employee may appeal the decision to the Secretary.

(b) In making a decision on an appeal, the Secretary shall consider only the evidence admitted during the prior proceeding and contained in the record of that proceeding.

(c) If the Secretary modifies or reverses the initial decision, the Secretary shall specify the findings of fact and conclusions of law that are different from those of the examiner.

§ 98.11 Final administrative decision.

The final administrative decision under this part shall be:

(a) The decision of the examiner under § 98.8(b), if there is no appeal under § 98.10;

(b) The decision by the examiner under § 98.9, if a hearing is waived or is deemed to have been waived and there is no appeal under § 98.10; or

(c) The decision of the Secretary on an appeal under § 98.10.

Subpart B—Administrative Sanctions

§ 98.12 Administrative sanctions.

(a) The Secretary, in decisions under § 98.10 of this part, and the examiner, in decisions under § 98.8 and § 98.9 of this part, may impose an administrative sanction against a former employee who, after a final administrative decision under this part, is found to be in violation of 18 U.S.C. 207.

(b) The administrative sanctions that may be imposed under subsection (a) of this section are:

(1) Prohibiting the former employee from making, on behalf of any other person except the United States, any formal or informal appearance before, or, with the intent to influence, any oral or written communication to, the Department of any of its administrations on any matter of business for a period not to exceed five years; or

(2) Taking other appropriate disciplinary action, such as a reprimand or suspension from participation in a particular matter or matters before the Department.

Subpart C—Judicial Review

§ 98.13 Judicial review.

Any former employee found to have violated 18 U.S.C. 207 by a final administrative decision under this part may seek judicial review of disciplinary action imposed under this part.

PART 99—EMPLOYEE RESPONSIBILITIES AND CONDUCT

Subpart A—General

Sec.
99.735–1 Cross-reference to ethical conduct standards and financial disclosure regulations.

Subparts B–E [Reserved]

Subpart F—Responsibilities of the Government Employee and Special Government Employee Following Departure From Government Service

99.735–80 Applicability.
99.735–81 Post-employment duties and responsibilities.

APPENDIX A—CATEGORIES OF FINANCIAL INTERESTS EXEMPTED FROM THE PROHIBITIONS OF SECTION 208(A) OF TITLE 18, UNITED STATES CODE
APPENDIX B–D [RESERVED]
APPENDIX E—STATUTES REGULATING POST-EMPLOYMENT RESPONSIBILITIES OF GOVERNMENT AND SPECIAL GOVERNMENT EMPLOYEES

AUTHORITY: 49 U.S.C. 322; E.O. 12674, 54 FR 15159, 3 CFR, 1989 Comp., p. 215, as modified by E.O. 12731, 55 FR 42547, 3 CFR, 1990 Comp., p. 306.

SOURCE: Amdt. 99–10, 42 FR 3119, Jan. 14, 1977, unless otherwise noted.

Subpart A—General

§ 99.735–1 Cross-reference to ethical conduct standards and financial disclosure regulations.

Employees of the Department of Transportation are subject to the executive branch-wide Standards of Ethical Conduct at 5 CFR part 2635, the Department of Transportation regulations at 5 CFR part 6001 which supplement the executive branch-wide standards and the executive branch-wide financial disclosure regulations at 5 CFR part 2634.

[61 FR 39904, July 31, 1996]

Subparts B–E [Reserved]

Subpart F—Responsibilities of the Government Employee and Special Government Employee Following Departure From Government Service

§ 99.735–80 Applicability.

The provisions of this subpart apply only to employees who terminated government service before January 1, 1991.

[58 FR 7995, Feb. 11, 1993]

§ 99.735–81 Post-employment duties and responsibilities.

The duties and obligations of a Government employee (or a special Government employee) do not end when government service terminates by retirement, resignation, or for any other reason. In fact the U.S. Code sets forth specific criminal penalties for certain activities by former Government employees. To summarize broadly, section 207 of title 18, U.S. Code, prohibits a former Government employee from acting as agent or attorney in various types of proceedings and matters on behalf of a non-Government party when the employee was involved in the subject matter while working for the Government. The duration and nature of the prohibitions depend in part on the depth of the employee's involvement in the matter while in Government service. Section 208 of the same title relates to activities performed while a Government employee that benefit an employee's prospective private employer. All Government employees and special Government employees should become familiar with the provisions of the two statutory sections cited, which have been made a part of this regulation as appendix E, so that they will be aware of the restrictions which might affect them upon their termination from the Government service.

APPENDIX A—CATEGORIES OF FINANCIAL INTERESTS EXEMPTED FROM THE PROHIBITIONS OF SECTION 208(A) OF TITLE 18, UNITED STATES CODE

I. (a) Pursuant to the authority of section 208(b) of title 18, United States Code, the following are exempted from the prohibitions of section 208(a) of title 18, United States Code, because they are too remote or too inconsequential to affect the integrity of an employee's services in any matter in which he may act in his governmental capacity.

(1) Any holding in a widely held mutual fund, or regulated investment company, which does not specialize in an industry in which the possibility of conflict arise.

(2) Continued participation in a bona fide pension, retirement, group life, health, or accident insurance plan or other employee welfare or benefit plan that is maintained by a business or nonprofit organization by which the employee was formerly employed, to the extent that the employee's rights in the plans are vested and require no additional services by him or further payments to the plans by the organization with respect to the services of the employee. In addition, to the extent that the welfare or benefit plan is a profit sharing or stock bonus plan, this exemption does not apply and the procedures prescribed in § 99.735–15c (c) through (e) will apply to the interest of that employee in the plan.

(3) Participation in an air carrier frequent flyers or substantially similar program that is available to the general public on the same terms and conditions and involves no direct financial interest in the carrier, such

as stockholdings or similar types of investment interests.

[Amdt.99–10, 42 FR 3119, Jan. 14, 1977, as amended by Amdt. 99–14, 53 FR 16414, May 9, 1988]

APPENDIX B–D [RESERVED]

APPENDIX E—STATUTES REGULATING POST-EMPLOYMENT RESPONSIBILITIES OF GOVERNMENT AND SPECIAL GOVERNMENT EMPLOYEES

NOTE: This appendix applies only to employees who terminated government service before January 1, 1991.

§ 207 *Disqualification of former officers and employees in matters connected with former duties or offical responsibilities; disqualification of partners.*

(a) Whoever, having been an officer or employee of the executive branch of the United States Government, of any independent agency of the United States, or of the District of Columbia, including a special Government employee, after his employment has ceased, knowingly acts as agent or attorney for anyone other than the United States in connection with any judicial or other proceeding, application, request for a ruling or other determination, contract, claim, controversy, charge, accusation, arrest, or other particular matter involving a specific party or parties in which the United States is a party or has a direct and substantial interest and in which he participated personally and substantially as an officer or employee, through decision, approval, disapproval, recommendation, the rendering of advice, investigation, or otherwise, while so employed, or

(b) Whoever, having been so employed, within one year after his employment has ceased, appears personally before any court or department or agency of the Government as agent, or attorney for, anyone other than the United States in connection with any proceeding, application, request for a ruling or other determination, contract, claim, controversy, charge, accusation, arrest, or other particular matter involving a specific party or parties in which the United States is a party or directly and substantially interested, and which was under his official responsibility as an officer or employee of the Government at any time within a period of one year prior to the termination of such responsibility:

Shall be fined not more than $10,000 or imprisoned for not more than two years, or both: *Provided*, That nothing in subsection (a) or (b) prevents a former officer or employee, including a former special Government employee, with outstanding scientific or technological qualifications from acting as attorney or agent or appearing personally in connection with a particular matter in a scientific or technological field if the head of the department or agency concerned with the matter shall make a certification in writing, published in the FEDERAL REGISTER, that the national interest would be served by such action or appearance by the former officer or employee.

(c) Whoever, being a partner of an officer or employee of the executive branch of the United States Government, of any independent agency of the United States, or of the District of Columbia, including a special Government employee, acts as agent or attorney for anyone other than the United States, in connection with any judicial or other proceeding, application, request for a ruling or other determination, contract, claim, controversy, charge, accusation, arrest, or other particular matter in which the United States is a party or has a direct and substantial interest and in which such officer or employee of the Government or special Government employee participates or has participated personally and substantially as a Government employee through decision, approval, disapproval, recommendation, the rendering of advice, investigation or otherwise, or which is the subject of his official responsibility:

Shall be fined not more than $5,000, or imprisoned not more than one year, or both.

A partner of a present or former officer or employee of the executive branch of the United States Government, of any independent agency of the United States, or of the District of Columbia or of a present or former special Government employee shall as such be subject to the provisions of sections 203, 205, and 207 of this title only as expressly provided in subsection (c) of this section. (Added Pub. L. 87–349, section 1(a), Oct. 23, 1962, 76 Stat. 1123.)

§ 203 *Acts affecting a personal financial interest.*

(a) Except as permitted by subsection (b) hereof, whoever, being an officer or employee of the executive branch of the United States Government, of any independent agency of the United States, or of the District of Columbia, including a special Government employee, participates personally and substantially as a Government officer or employee, through decision, approval, disapproval, recommendation, the rendering of advice, investigation, or otherwise, in a judicial or other proceeding, application, request for a ruling or other determination, contract, claim, controversy, charge, accusation, arrest, or other particular matter in which, to his knowledge, he, his spouse, minor child, partner, organization in which he is serving as officer, director, trustee, partner or employee, or any person or organization with whom he is

negotiating or has any arrangement concerning prospective employment, has a financial interest:

Shall be fined not more than $10,000, or imprisoned not more than two years, or both.

(b) Subsection (a) hereof shall not apply (1) if the officer or employee first advises the Government official responsible for appointment to his position of the nature and circumstances of the judicial or other proceeding, application, request for a ruling or other determination, contract, claim, controversy, charge, accusation, arrest, or other particular matter and makes full disclosure of the financial interest and receives in advance a written determination made by such official that the interest is not so substantial as to be deemed likely to affect the integrity of the services which the Government may expect from such officer or employee, or (2) if, by general rule or regulation published in the FEDERAL REGISTER, the financial interest has been exempted from the requirements of clause (1) hereof as being too remote or too inconsequential to affect the integrity of Government officers' or employees' services. (Added Pub. L. 87–849, section 1(a), Oct. 23, 1962, 76 Stat. 1124.)

New 18 U.S.C. 208. This section forbids certain actions by an officer or employee of the Government in his role as a servant or representative of the Government. Its thrust is therefore to be distinguished from that of sections 203 and 205 which forbid certain actions in his capacity as a representative of persons outside the Government.

Subsection (a) in substance requires an officer or employee of the executive branch, an independent agency or the District of Columbia, including a special Government employee, to refrain from participating as such in any matter in which, to his knowledge, he, his spouse, minor child or partner has a financial interest. He must also remove himself from a matter in which a business or nonprofit organization with which he is connected or is seeking employment has a financial interest.

Subsection (b) permits the agency of an officer or employee to grant him an *ad hoc* exemption from subsection (a) if the outside financial interest in a matter is deemed not substantial enough to have an effect on the integrity of his services. Financial interests of this kind may also be made nondisqualifying by a general regulation published in the FEDERAL REGISTER.

Section 208 is similar in purpose to the former 18 U.S.C. 434 but prohibits a greater variety of conduct than the ''transaction of business with * * * [a] business entity'' to which the prohibition of section 434 was limited. In addition, the provision in section 208 including the interests of a spouse and others is new, as is the provision authorizing exemptions for insignificant interest.

[Amdt. 99-10, 42 FR 3119, Jan. 14, 1977, as amended by 58 FR 7995, Feb. 11, 1993]

APPENDIX TO SUBTITLE A—UNITED STATES RAILWAY ASSOCIATION—EMPLOYEE RESPONSIBILITIES AND CONDUCT

SUBPART A—GENERAL

Sec.
1 Purpose and policy.
3 Definitions.
5 Applicability.

SUBPART B—ETHICAL AND OTHER CONDUCT AND RESPONSIBILITIES OF EMPLOYEES

7 General.
9 Gifts, entertainment, and favors.
11 Outside employment and other activities.
13 Financial interests.
15 Conflicts of interest.
17 Disqualification arising from personal financial interests.
19 Use of Association property or official title.
21 Misuse of information.
23 Indebtedness.
25 Miscellaneous provisions.

SUBPART C—STATEMENTS OF EMPLOYMENT AND FINANCIAL INTEREST

31 Employees required to submit statement.
33 Time and place for submission of employee statements.
35 Supplementary statements.
37 Committee on Commerce, information not known by employee.
39 Information not required.
41 Confidentiality of employee's statement.
43 Interpretation and advisory service.

SUBPART D—DISQUALIFICATION OF FORMER EMPLOYEES IN MATTERS CONNECTED WITH FORMER DUTIES OR OFFICIAL RESPONSIBILITIES; DISQUALIFICATION OF PARTNERS

51 Matters in which employee participated personally and substantially.
53 Matters under employee's official responsibility.
55 Employee with outstanding scientific or technological qualifications.
57 Partner of employee.

APPENDIX 1—CATEGORIES OF FINANCIAL INTERESTS EXEMPTED FROM THE PROHIBITIONS OF SECTIONS 13(A), 15, AND 17(A)

APPENDIX 2—LIST OF EMPLOYEES REQUIRED TO SUBMIT STATEMENTS OF EMPLOYMENT AND FINANCIAL INTERESTS, UNDER SECTION 31 [RESERVED]

AUTHORITY: Sec. 202(a)(5)(2) of the Regional Rail Reorganization Act of 1973 (Pub. L. 93–236).

SOURCE: 39 FR 3825, Jan. 30, 1974.

SUBPART A—GENERAL

SECTION 1. *Purpose and policy.* (a) These regulations implement Pub. L. 93–236, The Regional Rail Reorganization Act of 1973. They prescribe standards of ethical and other conduct, and reporting requirements, for employees of the United States Railway Association (the Association). The standards and requirements are appropriate to the particular functions and activities of the Association.

(b) The absence of a specific published standard of conduct covering an act tending to discredit an employee of the Association does not mean that the act is condoned, is permissible, or would not call for and result in corrective or disciplinary action.

(c) Personnel of the Association shall observe standards of conduct that will reflect credit on the Association.

SEC. 3. *Definitions.* Unless the context requires otherwise, the following definitions apply in these regulations:

''Association'' means the United States Railway Association established by Pub. L. 93–236.

''Chairman'' means the Chairman of the Board of Directors of the Association.

''Employee'' means an officer or employee of the Association.

''General Counsel'' means the General Counsel of the Association, or his designee.

''Includes'' means ''includes but is not limited to.''

''May'' is used in a permissive sense to state authority or permission to do the act prescribed, and the words ''a person may not * * *'' mean that a person is not required, authorized, or permitted to do the act prescribed.

''Shall'' is used in an imperative sense.

SEC. 5. *Applicability.* These regulations apply to each employee of the Association.

SUBPART B—ETHICAL AND OTHER CONDUCT AND RESPONSIBILITIES OF EMPLOYEES

SEC. 7. *General.* (a) Each employee shall avoid any action, whether or not specifically prohibited by these regulations, which might result in or create the appearance of:

(1) Using his Association office for private gain;

(2) Giving preferential treatment to any person;

(3) Impeding the efficiency or economy of the Association;

(4) Losing complete independence or impartiality;

(5) Making an Association decision outside of official channels; or

(6) Affecting adversely the confidence of the public in the integrity of the Association.

(b) An employee may not engage in criminal, infamous, dishonest, immoral, or notoriously disgraceful conduct, or any conduct prejudicial to the integrity of the Association.

SEC. 9. *Gifts, entertainment, and favors.* (a) Except as provided in paragraphs (b) and (c) of this section, an employee may not solicit or accept, directly or indirectly, any gift, gratuity, favor, entertainment, food, lodging, loan, or other thing of monetary value, from a person or employer of a person who:

(1) Has, or is seeking to obtain, contractual or other business or financial relationships with the Association.

(2) Has interests which may be substantially affected by the performance or nonperformance of that employee's official duties.

(b) Notwithstanding paragraph (a) of this section, an employee may:

(1) Accept a gift, gratuity, favor, entertainment, loan, or other thing of value when the circumstances make it clear that an obvious family relationship rather than the business of the persons concerned is the motivating factor;

(2) Accept food or refreshment of nominal value on infrequent occasions in the ordinary course of a luncheon or dinner meeting or other meeting or on an inspection tour if the employee is properly in attendance;

(3) Accept unsolicited advertising or promotional material such as pens, pencils, note pads, calendars, or other items of nominal intrinsic value; or

(4) Accept an invitation addressed to the Association, when approved by the General Counsel, to participate in an inaugural trip or similar ceremonial event related to transportation, and accept food, lodging, and entertainment incident thereto.

(c) An employee may not solicit a contribution from another employee for a gift to an official superior, make a donation as a gift to an official superior, or accept a gift from an employee receiving less pay than himself. However, this paragraph does not prohibit a voluntary gift of nominal value or a donation in a nominal amount made on a special occasion such as marriage, illness, retirement, or transfer.

SEC. 11. *Outside employment and other activities.* (a) An employee may not engage in any outside employment or other outside activity which is not compatible with the full and proper discharge of the duties and responsibilities of his employment with the Association. Incompatible activities include:

(1) Acceptance of a fee, compensation, gift, payment of expenses, or any other thing of monetary value in circumstances in which acceptance may result in, or create the appearance of, a conflict of interest; and

(2) Outside employment which tends to impair his mental or physical capacity to perform his duties and responsibilities of his

employment with the Association in an acceptable manner.

(b) An employee may not receive any salary or anything of monetary value from a private source as compensation for his services to the Association.

(c) This section does not preclude an employee from participating in the affairs of, or accepting an award for a meritorious public contribution or achievement given by a charitable, religious, professional, social, or fraternal organization, a nonprofit educational or recreational organization, or a public service or civic organization.

SEC. 13. *Financial interests.* (a) Except where authorized by statute or these regulations, an employee may not have a direct or indirect financial interest that conflicts substantially, or appears to conflict substantially, with his Association duties and responsibilities. In any case in which such a question of financial interest arises the procedures set forth in section 17 apply.

(b) The fact that an employee is on leave of absence from employment with or has served as an attorney or consultant to, a railroad, or a company engaged in the manufacture, construction, or supply of railroad facilities and equipment, or a creditor of a railroad, shall not, of itself, be deemed to be a financial interest conflicting with his Association duties or responsibilities. This provision does not affect the obligation of such an employee to submit a statement of employment and financial interest as required by section 31(a)(1).

(c) The fact that an employee owns shares of stock, corporate bonds, or other corporate securities in any single railroad, or a company engaged in the manufacture, construction or supply of railroad facilities and equipment, or a creditor of a railroad, having a current aggregate market value of $10,000 or more, or an option to purchase such securities, shall not, in itself, be deemed to be a financial interest conflicting with his Association duties or responsibilities. Such ownership must, however, be reported in a special statement of financial interest, in a manner specified by the General Counsel, which shall be available for public inspection.

SEC. 15. *Conflicts of interest.* (a) Except where specifically exempted by statute or these regulations, a conflict of interest exists whenever the performance of the duties of an employee has or appears to have a direct and predictable effect upon a financial interest of such employee or of his spouse, minor child, partner, or person or organization with which he is associated or is negotiating for future employment.

(b) A conflict of interest exists even though there is no reason to suppose that the employee will, in fact, resolve the conflict to his own personal advantage rather than to that of the Association.

SEC. 17. *Disqualification arising from personal financial interests.* (a) Except as stated in paragraph (e) of this section, or except as permitted by statute, an employee may not participate personally and substantially as an employee, through decision, approval, disapproval, recommendation, the rendering of advice, investigation or otherwise, in a judicial or other proceeding, application, request for a ruling or other determination, contract, claim controversy, charge, accusation, or other particular matter in which, to his knowledge, he, his spouse, minor child, a blood relative who is a resident of the employee's household, partner, organization in which he is serving as officer, director, trustee, partner or employee, or any person or organization with whom he is negotiating or has any arrangement concerning prospective employment, has a financial interest, unless he shall cause the financial interest involved to be divested, or request a determination of the propriety of his participation in any matter by informing the General Counsel of the nature and circumstances of the matter and financial interest involved.

(b) After examining the information submitted the General Counsel may:

(1) Relieve the employee from participation in the matter and, if possible, reassign it to another employee who is not subordinate to the relieved employee;

(2) Approve the employee's participation upon determining in writing that the interest involved is not so substantial as to be likely to affect the integrity of the services the Association may expect from the employee;

(3) Recommend the reassignment of the employee; or

(4) If none of these alternatives is feasible, direct the employee to cause the financial interest to be divested so that it no longer comes within the scope of this section.

(c) In any case in which the General Counsel has reason to believe that an employee may have an interest that would be disqualifying under this section, he shall discuss the matter with the employee. If he finds that the interest exists, he may take any of the actions stated in paragraph (b) of this section.

(d) In any case in which the employee is dissatisfied with the General Counsel's decision, the employee may appeal the matter to the Chairman of the Association for reconsideration and final determination of the appropriate action.

(e) Information concerning categories of financial interests which are exempted from the prohibitions of §§13(a), 15, and paragraph (a) of this section as being too remote or too inconsequential to affect the integrity of an employee's interest in a matter, are set forth in Appendix 1.

SEC. 19. *Use of Association property or official title.* (a) An employee may not, directly or indirectly, use or allow the use of Association property of any kind, including property leased to the Association, for other than an officially approved activity. Each employee has a positive duty to protect and conserve Association property, including equipment, supplies, and other property entrusted or issued to him.

(b) An employee may not, directly or indirectly, use or allow the use of his title or position in connection with any commercial enterprise or in endorsing any commercial product or service.

SEC. 21. *Misuse of information.* An employee may not, for the purpose of furthering a private interest, directly or indirectly, use or allow the use of official information obtained through or in connection with his Association employment, if that information has not been made available by the Association to the general public.

SEC. 23. *Indebtedness.* Each employee shall pay his just financial obligations in a proper and timely manner, especially those imposed by law such as Federal, State, or local taxes. For the purposes of this section ''just financial obligations'' means those that are recognized as such by the employee or reduced to a judgment by a court, and ''in a proper and timely manner'' means in a manner which the Association determines does not, under the circumstances, reflect adversely on the Association as his employer. The Association will not determine the validity or amount of a disputed debt and will not initiate action to collect such debts.

SEC. 25. *Miscellaneous provisions.* (a) Each employee shall acquaint himself with these regulations which relate to his ethical and other conduct as an employee of the Association.

(b) In the appointment of personnel and in assignment of their duties, the President of the Association shall take steps to avoid, to as great an extent as possible, any conflict between the Association duties and the private interests of such personnel.

SUBPART C—STATEMENTS OF EMPLOYMENT AND FINANCIAL INTEREST

SEC. 31. *Employees required to submit statement.* (a) Each of the following employees shall submit a statement of employment and financial interest on a form provided by the Association:

(1) Each employee who within the preceding two years was employed by or served as an attorney or consultant to, a railroad or a company significantly engaged in the manufacture, construction or supply of railroad facilities and equipment, including, but not limited to, rolling stock, terminal facilities, signal equipment, track and road bed, and electrical and communication transmission equipment. The General Counsel shall decide, in a doubtful case, whether the relationship to the railroad industry is sufficiently significant as to require submission of a statement of employment and financial interest.

(2) Each employee who is in a position identified in Appendix 2.

(b) Any employee who believes that his position has been improperly included as one requiring the submission of a statement of employment and financial interest is entitled to have that inclusion reviewed by the General Counsel.

(c) Any employee in a position which meets the criteria in paragraph (a) of this section may be excluded from the reporting requirements of this section if the General Counsel determines that the duties of the position are at such a level of responsibility that the submission of a statement is not necessary because of the degree of supervision and review and the remote or inconsequential effect on the integrity of the Association.

SEC. 33. *Time and place for submission of employee statements.* Each employee who is subject to the reporting requirements of sec. 31 shall submit his employment and financial interest statement to the General Counsel within 30 days after entering the employ of the Association.

SEC. 35. *Supplementary statements.* (a) Each employee shall, not later than July 31 of each year, file a supplementary statement, showing, as of June 30 of that year, any change in, or addition to, the information contained in his statement of employment and financial interest. If changes or additions have not occurred, a negative report is required.

(b) Compliance with the reporting requirements of this subpart is not an alternative to observance of the conflict-of-interest provisions of subpart B of these regulations, but is to facilitate uniform compliance with, and the orderly administration of subpart B.

SEC. 37. *Committee on Commerce, Information not known by employee.* If any information required to be included on a statement of employment and financial interest or a supplementary statement, including any holding placed in trust, is not known to the employee but is known to another person, the employee shall request that other person to submit the information on his behalf, and the employee shall so notify the General Counsel.

SEC. 39. *Information not required.* An employee is not required to submit on a statement of employment and financial interest or supplementary statement any information relating to his connection with, or interest in, a professional society, or a charitable, religious, social, fraternal, recreational, public service, civic, or political organization, or a similar organization not conducted as a business enterprise. For the

purposes of this section, educational and other institutions doing research and development or related work involving grants of money from or contracts with the Association are considered to be ''business enterprises'' and are required to be included in the employee's statement of employment and financial interest.

SEC. 41. *Confidentiality of employee's statement.* (a) Except for special statements of financial interest required by sec. 13(c) each statement of employment and financial interest and each supplementary statement shall be held in confidence. The reviewing officials and others who receive statements are responsible for maintaining them in confidence and shall not allow access to, or allow information to be disclosed from, a statement except to carry out the purposes of these regulations. Information may not be disclosed to any person outside the Association, except as the General Counsel may determine for good cause shown. No disclosure permitted by this paragraph may be made unless the affected employee has been notified that disclosure is contemplated, and the employee is given an opportunity to present reasons and arguments to maintain the confidentiality of the statement.

(b) Each statement of employment and financial interest and each supplementary statement shall be maintained in the records of the Association.

SEC. 43. *Interpretation and advisory service.* The General Counsel shall provide authoritative counseling and interpretations to employees who require advice and guidance on questions of conflicts of interest or any other matters of legal import covered by these regulations.

SUBPART D—DISQUALIFICATION OF FORMER EMPLOYEES IN MATTERS CONNECTED WITH FORMER DUTIES OR OFFICIAL RESPONSIBILITIES; DISQUALIFICATION OF PARTNERS

SEC. 51. *Matters in which employee participated personally and substantially.* Except as permitted by sec. 55 hereof, an employee of the Association, after his employment has ceased, may not act as agent or attorney for anyone other than the Association in connection with any judicial or other proceeding, application, request for a ruling or other determination, contract claim, controversy, charge, accusation, arrest, or other particular matter involving a specific party or parties, in which the Association is a party or has a direct and substantial interest and in which he participated personally and substantially as an employee, through decision, approval, disapproval, recommendation, the rendering of advice, investigation, or otherwise, while so employed.

SEC. 53. *Matters under employee's official responsibility.* Except as permitted by sec. 55 hereof, an employee of the Association may not, within one year after his employment has ceased, appear personally before the Association or any court or department or agency of the Government as agent, or attorney, for anyone other than the Association in connection with any proceeding, application, request for a ruling or other determination, contract, claim, controversy, charge, accusation, arrest, or other particular matter involving a specific party or parties, in which the Association is a party or directly and substantially interested, and which was under his official responsibility as an officer or employee of the Association at any time within a period of one year prior to the termination of such responsibility.

SEC. 55. *Employee with outstanding scientific or technological qualifications.* A former employee with outstanding scientific or technological qualifications may act as attorney or agent or appear personally in connection with a particular matter in a scientific or technological field if the General Counsel certifies in writing, in advance, that the public interest would be served by such action or appearance.

SEC. 57. *Partner of employee.* A partner of an employee of the Association may not act as agent or attorney for anyone other than the Association, in connection with any judicial or other proceeding, application, request for a ruling or other determination, contract, claim, controversy, charge, accusation, arrest, or other particular matter in which the Association is a party or has a direct and substantial interest and in which such employee of the Association participates personally and substantially as an employee through decision, approval, disapproval, recommendation, the rendering of advice, investigation or otherwise, or which is the subject of his official responsibility.

APPENDIX 1—CATEGORIES OF FINANCIAL INTERESTS EXEMPTED FROM THE PROHIBITIONS OF SECTIONS 13(A), 15, AND 17(A)

I. (a) The following are exempted from the prohibitions of sections 13(a), 15, and 17(a), because they are too remote or too inconsequential to affect the integrity of an employee's services in any matter in which he may act in his official capacity.

(1) Any holding in a widely held mutual fund, or regulated investment company, which does not specialize in the transportation industry.

(2) Ownership of shares of stock and of corporate bonds or other corporate securities, if the current aggregate market value of the stocks and other securities so owned in any single corporation is less than $10,000 and is less than one percent of the outstanding stock of the organization concerned, and if the employee, his spouse, or minor children